SITE TELECOMMUNICATIONS LEGEND

SYMBOL	DESCRIPTION
	EXISTING OVERHEAD UTILITY POLE. SUBSCRIPT INDICATES POLE NUMBER
	REMOVE OVERHEAD UTILITY POLE. SUBSCRIPT INDICATES POLE NUMBER
TMH1	TELECOMMUNICATIONS MANHOLE. SUBSCRIPT INDICATES MANHOLE NUMBER.
MH-1	EXISTING TELECOMMUNICATIONS MANHOLE. SUBSCRIPT INDICATES THE MANHOLE NUMBER.
PP-1	TELEPHONE PEDESTAL. SUBSCRIPT INDICATES THE PEDESTAL NUMBER.
HH-1	EXISTING TELECOMMUNICATIONS HANDHOLE. SUBSCRIPT INDICATES HANDHOLE NUMBER.
HH-1	TELECOMMUNICATIONS HANDHOLE. SUBSCRIPT INDICATES HANDHOLE NUMBER. SEE DETAIL A1/TS502.
EDBC	EXISTING DIRECT BURIED CABLE TO REMAIN
EUC	EXISTING UNDERGROUND COMMUNICATIONS DUCT BANK TO REMAIN
EOC	EXISTING OVERHEAD COMMUNICATIONS CABLE TO REMAIN
DDBC	REMOVE DIRECT BURIED CABLE
DUC	REMOVE UNDERGROUND COMMUNICATIONS DUCT BANK
DOC	REMOVE OVERHEAD COMMUNICATIONS CABLE
UC	UNDERGROUND COMMUNICATIONS DUCT BANK
	1-WAY DUCT BANK, NON-CONCRETE ENCASED. SEE C3/TS501 FOR DETAIL.
	2-WAY DUCT BANK, NON-CONCRETE ENCASED. SEE C1/TS501 FOR DETAIL.
	4-WAY DUCT BANK, NON-CONCRETE ENCASED. SEE A1/TS501 FOR DETAIL.
	6-WAY DUCT BANK, NON-CONCRETE ENCASED. SEE A3/TS501 FOR DETAIL.

NOTE: THIS REPRESENTS A 4-WAY DUCT BANK. THE NUMBER OF BOXES INDICATES THE QUANTITY OF DUCTS IN A DUCT BANK.

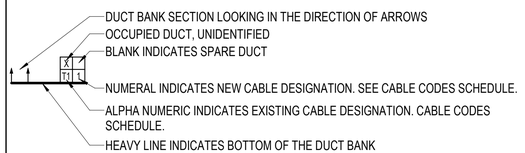

CABLE CODE SCHEDULE

CODE	DESCRIPTION
1	24 STRAND SINGLE MODE FIBER OPTIC CABLE IN 3-CELL FABRIC MESH INNERDUCT.
2	25 PAIR OSP COPPER CABLE.
3	600 PAIR OSP COPPER CABLE.

TELEPHONE/DATA SYSTEM

SYMBOL	DESCRIPTION	MOUNTING
	COMBINATION VOICE/DATA OUTLET. SEE B1/TT502 FOR TYPICAL OUTLET CONFIGURATION, FACE PLATE CODES, AND MOUNTING HEIGHT CODES.	18" AFF TO TOP UON.
	TELEPHONE OUTLET. SEE B1/TT502 FOR OUTLET CONFIGURATION AND FACE PLATE CODES.	54" AFF TO CENTER UON.
A	RECESSED COMBINATION FLOOR BOX. SUBSCRIPT SHOWN ON TELECOMMUNICATIONS DRAWINGS FOR REFERENCE ONLY. INDICATES TYPE, SEE FLOOR BOX SCHEDULE ON EP701. SEE B1/TT502 FOR TYPICAL OUTLET CONFIGURATION.	FLOOR RECESSED
	TELECOMMUNICATIONS EQUIPMENT RACK WITH HORIZONTAL AND VERTICAL CABLE MANAGEMENT.	FLOOR
PBB	TELECOMMUNICATIONS PRIMARY BONDING BUS BAR. REFER TO B3/TT501 FOR DETAIL.	72" AFF TO CENTER.
	PLYWOOD TELEPHONE BACKBOARD. 3/4" THICK 100% VOID FREE FIRE-RETARDANT PLYWOOD BACKBOARD FROM 4" ABOVE THE FINISHED FLOOR TO 8'-4" AFF UON. PAINT ALL SIDES AND EDGES WITH WHITE FIRE-RETARDANT PAINT. DO NOT PAINT OVER PLYWOOD FIRE RATING LABELS.	WALL
	LOW VOLTAGE LADDER RACK FOR COMMUNICATIONS SYSTEMS WIRING ONLY. 18" WIDE UON.	SUSPENDED
	LOW VOLTAGE CABLE TRAY FOR COMMUNICATIONS SYSTEMS WIRING ONLY. 4" HIGH x 18" WIDE UON.	SUSPENDED
BEP	BUILDING PRIMARY ENTRANCE PROTECTION	WALL

BACKBONE CABLE IDENTIFICATION TAG:

------ / ------ - FSM.24

- NUMBER OF PAIRS/FIBER STRANDS
- CABLE TYPE:
  - FSM - FIBER OPTIC SINGLE MODE
  - C - COPPER
  - CX - COAX
- CABLE TERMINATION ROOM NUMBER
- CABLE ORIGINATION ROOM NUMBER

AUDIO VISUAL (A/V SYSTEM) LEGEND

NOTES:

A. THE A/V SYSTEM IS OWNER FURNISHED, OWNER INSTALLED. PROVIDE ALL INDICATED ROUGH-INS.
B. COORDINATE ROUGH-INS WITH THE OWNER'S A/V VENDOR.
C. UNLESS OTHERWISE INDICATED, COVER PLATES FOR A/V BOXES WILL BE FURNISHED AND INSTALLED BY THE OWNER'S VENDOR.
D. PROVIDE PULL STRINGS IN ALL EMPTY CONDUITS.

SYMBOL	DESCRIPTION	MOUNTING
AV M	MONITOR LOCATION A/V BOX. 14 1/4" SQUARE BY 4" DEEP BOX WITH REMOVABLE COVER.	BEHIND MONITOR
AV P	PRESENTER LOCATION A/V BOX. 4 1/2" SQUARE BY 2 1/2" DEEP BOX WITH TWO GANG PLASTER RING.	ABOVE COUNTER TOP
AV CP	CONTROL PANEL LOCATION A/V BOX. 4 1/2" SQUARE BY 2 1/2" DEEP BOX WITH TWO GANG PLASTER RING.	48" AFF TO CENTER

PUBLIC SAFETY DISTRIBUTED ANTENNA SYSTEM (DAS)

SYMBOL	DESCRIPTION	MOUNTING
	PUBLIC SAFETY DAS ANTENNA. ANTENNAS SHOWN ON THE DRAWINGS REPRESENT GENERAL LOCATION AND QUANTITY ONLY. INCLUDE HEAT MAPS WITH THE SHOP DRAWINGS TO SHOW ACTUAL ANTENNA LOCATIONS AND QUANTITIES.	CEILING
PDAS	PUBLIC SAFETY DAS HEADEND EQUIPMENT (BDA) AND BATTERY BACKUP. SEE A3/TT601 FOR ADDITIONAL INFORMATION.	WALL

ACCESS CONTROL SYSTEM

NOTES:

1. THE ACCESS CONTROL SYSTEM IS GOVERNMENT FURNISHED, GOVERNMENT INSTALLED. PROVIDE EMPTY BOXES AND CONDUIT ONLY.
2. SUBSCRIPT INDICATES THE DOOR NUMBER AND HARDWARE SET OF THE ASSOCIATED DOOR RELATED TO THE DEVICE 1124.1(101).
3. PROVIDE BACK BOXES AS REQUIRED FOR EACH DEVICE.
4. ALL MOUNTING HEIGHTS ARE TO CENTER, UON.

SYMBOL	DESCRIPTION	MOUNTING
CR	PROXIMITY-TYPE CARD READER CREDENTIAL DEVICE.	42" AFF
ESS	DEDICATED SPACE FOR ELECTRONIC SECURITY SYSTEM.	NA

INTRUSION DETECTION SYSTEM

NOTES:

1. THE INTRUSION DETECTOIN SYSTEM IS GOVERNMENT FURNISHED, GOVERNMENT INSTALLED. PROVIDE EMPTY BOXES AND CONDUIT ONLY.
2. PROVIDE BACK BOXES AS REQUIRED FOR EACH DEVICE.
3. ALL MOUNTING HEIGHTS ARE TO CENTER, UON.
4. ALL CONDUIT SHALL BE METALLIC WITH COMPRESSION FITTINGS.

SYMBOL	DESCRIPTION	MOUNTING
KP	KEYPAD CREDENTIAL DEVICE LOCATION. PROVIDE 4 11/16" SQUARE BY 2 1/8" DEEP BOX. PROVIDE 3/4" CONDUIT FROM BOX TO IDS CABINET.	60" AFF
MD	VOLUMETRIC MOTION DETECTOR. PROVIDE 4 11/16" SQUARE BY 2 1/8" DEEP BOX. PROVIDE 3/4" CONDUIT FROM BOX TO IDS CABINET. MOTION SENSOR BOXES MUST BE 3" MINIMUM FROM ALL DUCTS AND LIGHT FIXTURES. SUBSCRIPTS INDICATE THE FOLLOWING MOUNTING: W - WALL MOUNTED AT 10' C - CEILING MOUNTED IN AN ACCESSIBLE LOCATION	SUBSCRIPT TO INDICATE MOUNTING
BM	BALANCED MAGNETIC SWITCH. SHOWN FOR REFERENCE ONLY ON IDS DOORS WITH ACCESS CONTROL. DOORS WITH IDS AND ACCESS CONTROL UTILIZE DOUBLE-POLE, DOUBLE-THROW DOOR POSITION SWITCH, WITH ONE POLE CONNECTED TO THE IDS AND THE OTHER POLE CONNECTED TO ACCESS CONTROL.	DOOR AND DOOR FRAME

VIDEO SURVEILLANCE SYSTEM

NOTES:

1. THE VIDEO SURVEILLANCE SYSTEM IS GOVERNMENT FURNISHED, GOVERNMENT INSTALLED. PROVIDE EMPTY BOXES AND CONDUIT ONLY.
2. ALL MOUNTING HEIGHTS ARE TO CENTER, UON
3. PROVIDE BACK BOXES AS REQUIRED.
4. ALL MOUNTING HEIGHTS ARE TO CENTER, UON.
5. PROVIDE 4 11/16" SQUARE BY 2 1/8" DEEP BOX FOR ALL DEVICE LOCATIONS. PROVIDE 3/4" CONDUIT FROM BOX TO LADDER RACK IN TR 112.
6. VERIFY ALL CONDUIT SIZES AND BOX SIZES WITH GOVERNMENT PRIOR TO ROUGH-IN.

SYMBOL	DESCRIPTION	MOUNTING
	180° EXTERIOR SURVEILLANCE CAMERA. SEE C3/TY501 FOR DETAIL.	WALL AT 10' AFF UON

GENERAL NOTES

A. SEE REFLECTED CEILING PLANS AE111A & AE111B FOR EXACT LOCATION OF CEILING MOUNTED DEVICES.
B. INSTALL ALL EQUIPMENT AND DEVICES AT THE HEIGHT INDICATED. REFER TO ARCHITECTURAL INTERIOR ELEVATIONS FOR SPECIAL MOUNTING HEIGHTS AND LOCATIONS OF COMMUNICATIONS DEVICES. MOUNTING HEIGHTS AND LOCATIONS INDICATED ON ARCHITECTURAL ELEVATIONS TAKE PRECEDENCE OVER OTHER MOUNTING HEIGHTS AND LOCATIONS.
C. WHERE DEVICES ARE INDICATED TO BE MOUNTED ABOVE A COUNTERTOP, MOUNT DEVICE SUCH THAT BOTTOM OF COVER PLATE IS 2" ABOVE TOP OF BACK SPLASH. IF THERE IS NO BACK SPLASH, MOUNT DEVICE 2" ABOVE FINISHED COUNTER TOP SURFACE TO BOTTOM OF DEVICE COVER PLATE.
D. ALL MATERIALS AND EQUIPMENT SHALL BE LISTED AS COMPLYING WITH THE APPLICABLE STANDARDS OF UNDERWRITER'S LABORATORIES, INC OR OTHER APPROVED LISTING AGENCIES.
E. VERIFY LOCATION OF ALL FLOOR-MOUNTED OUTLETS WITH CONTRACTING OFFICER PRIOR TO ROUGH-IN.
F. WHERE CONDUIT IS ROUTED ABOVE THE FINISHED CEILING, COORDINATE LOCATION AND ROUTING WITH OTHER TRADES AND SYSTEMS TO PROVIDE A COORDINATED INSTALLATION AND TO ASSURE MAXIMUM ACCESSIBILITY TO ALL SYSTEMS. ALL JUNCTION BOXES AND PULL BOXES SHALL REMAIN ACCESSIBLE.
G. DO NOT MOUNT ELECTRICAL OR COMMUNICATIONS DEVICES, OUTLETS, OR BOXES BACK TO BACK UNLESS SPECIFICALLY INDICATED OTHERWISE NOTED.
H. COORDINATE EXACT MOUNTING HEIGHT AND LOCATION FOR ALL TELEVISION POWER AND LOW VOLTAGE OUTLETS WITH THE ARCHITECTURAL PLANS. THE EXACT LOCATION OF THESE OUTLETS SHALL ALSO BE COORDINATED WITH THE SPECIFIC TELEVISION MOUNTING BRACKETS BEING SUPPLIED FOR THIS PROJECT. THE OUTLETS SHALL BE CONCEALED FROM NORMAL VIEWING ANGLES BY THE TELEVISION MONITOR.
I. MAINTAIN 12" CLEAR SPACE ABOVE ALL CABLE TRAYS. MAINTAIN AT LEAST 12" CLEAR SPACE ON ONE SIDE OF ALL CABLE TRAYS FOR SIDE ACCESS TO THE CABLE TRAYS.
J. PROVIDE PULLBOX WHERE REQUIRED SO THAT THERE ARE NO MORE THAN TWO 90 DEGREE BENDS BETWEEN PULL POINTS. PROVIDE PULLBOX WHERE REQUIRED SO THAT THERE IS NO MORE THAN 100' IN A CONDUIT SECTION.

ABBREVIATIONS

A	AMPERES	mm	MILLIMETER
AFC	ABOVE FINISHED CEILING	MAX	MAXIMUM
AFF	ABOVE FINISHED FLOOR	MFR	MANUFACTURER
AFG	ABOVE FINISHED GRADE	MIN	MINIMUM
AHU	AIR HANDLING UNIT	MISC	MISCELLANEOUS
A/V	AUDIO/VIDEO	NA	NOT APPLICABLE
AWG	AMERICAN WIRE GAUGE	NC	NURSE CALL
BFC	BELOW FINISHED CEILING	NEC	NATIONAL ELECTRICAL CODE
BFG	BELOW FINISHED GRADE	NFPA	NATIONAL FIRE PROTECTION ASSOCIATION
C	CONDUIT		
CATV	CABLE TELEVISION	PBB	PRIMARY BUSBAR
CU	COPPER	PVC	POLYVINYL CHLORIDE
EF	ENTRANCE FACILITY	RGS	RIGID GALVANIZED STEEL
EMT	ELECTRICAL METALLIC TUBING	SBB	SECONDARY BONDING BUSBAR
ER	EQUIPMENT ROOM	TDR	TECHNOLOGY DISTRIBUTION ROOM
FA	FIRE ALARM	TE	TELECOMMUNICATIONS ENCLOSURE
G	GROUND	TR	TELECOMMUNICATIONS ROOM
GND	GROUND	TYP	TYPICAL
HVAC	HEATING/VENTILATING / AIR CONDITIONING	UON	UNLESS OTHERWISE NOTED
		V	VOLTS
JB	JUNCTION BOX	VA	VOLT-AMPERES
KW	KILO-WATTS	W	WATTS
LAN	LOCAL AREA NETWORK	WAP	WIRELESS ACCESS POINT
LED	LIGHT-EMITTING DIODE	WP	WEATHER PROOF
m	METER	XFMR	TRANSFORMER

LINE TYPES

LINE TYPE	DESCRIPTION
	SOLID LINES INDICATE EQUIPMENT PROVIDED IN THIS CONTRACT.
	SCREENED LINES INDICATE EXISTING EQUIPMENT.
	DASHED LINES INDICATE EQUIPMENT REMOVED IN THIS CONTRACT.
	HATCH LINES INDICATE EQUIPMENT REMOVED IN THIS CONTRACT.

MISCELLANEOUS

SYMBOL	DESCRIPTION	MOUNTING
00	KEY NOTE SYMBOL.	NA
	ELECTRICAL GROUND	NA
	CABLE / CONDUIT CONTINUATION.	NA
	CONDUIT CAP OR COUPLER GROUNDING BUSHING.	NA
J	COMMUNICATIONS JUNCTION BOX. 4 11/16" SQUARE BY 2 1/8" DEEP BOX WITH A BLANK FACE PLATE.	AS INDICATED
	POINT OF REMOVAL, DEMOLITION.	NA
	POINT OF CONNECTION, EXISTING TO NEW WORK.	NA

SYM	DESCRIPTION	DATE	APPR

NAVFAC

REGISTERED COMMUNICATIONS DISTRIBUTION DESIGNER
DONALD R SELLERS
REG. NO. 110645
EXPIRES 12-31-2025
RCDD
SEAL

BAMFORTH ENGINEERS + SURVEYORS

A/E INFO

APPROVED
DONALD R SELLERS, R.E.A.
FOR COMMANDER NAVFAC 4/22/2026

ACTIVITY
APPROVED BY
LCDR VINCE DEL GRECO, FEAD
PWD YORKTOWN, VA, VIA EMAIL

SATISFACTORY TO DATE 06/12/2025

DES	MES	DRW	MES	CHK	DRS

PM/DM RY / KJY
BRANCH MANAGER WRB
CHIEF ENG/ARCH JWJ
FIRE PROTECTION HPN

DEPARTMENT OF THE NAVY
NAVAL FACILITIES ENGINEERING SYSTEMS COMMAND
MIDLANT DC CORE
NAVAL FACILITIES ENGINEERING SYSTEMS COMMAND
NORFOLK, VA
NAVAL WEAPONS STATION
YORKTOWN, VIRGINIA
P-1419 CONVENTIONAL PROMPT STRIKE (CPS)
WEAPONS TEST FACILITY
TELECOMMUNICATIONS LEGEND

SCALE: AS NOTED
EPROJECT NO.: 1783999
CONSTR. CONTR. NO.
NAVFAC DRAWING NO. 12931107
SHEET 353 OF 427

TG001

DRAWFORM REVISION: 14 SEPTEMBER 2023

7/3/2025 1:55:02 PM TG001
Autodesk Docs://23189.00 - P-1419 CPS WT Facility/BLDG-P1419-1783999-T_v24.rvt

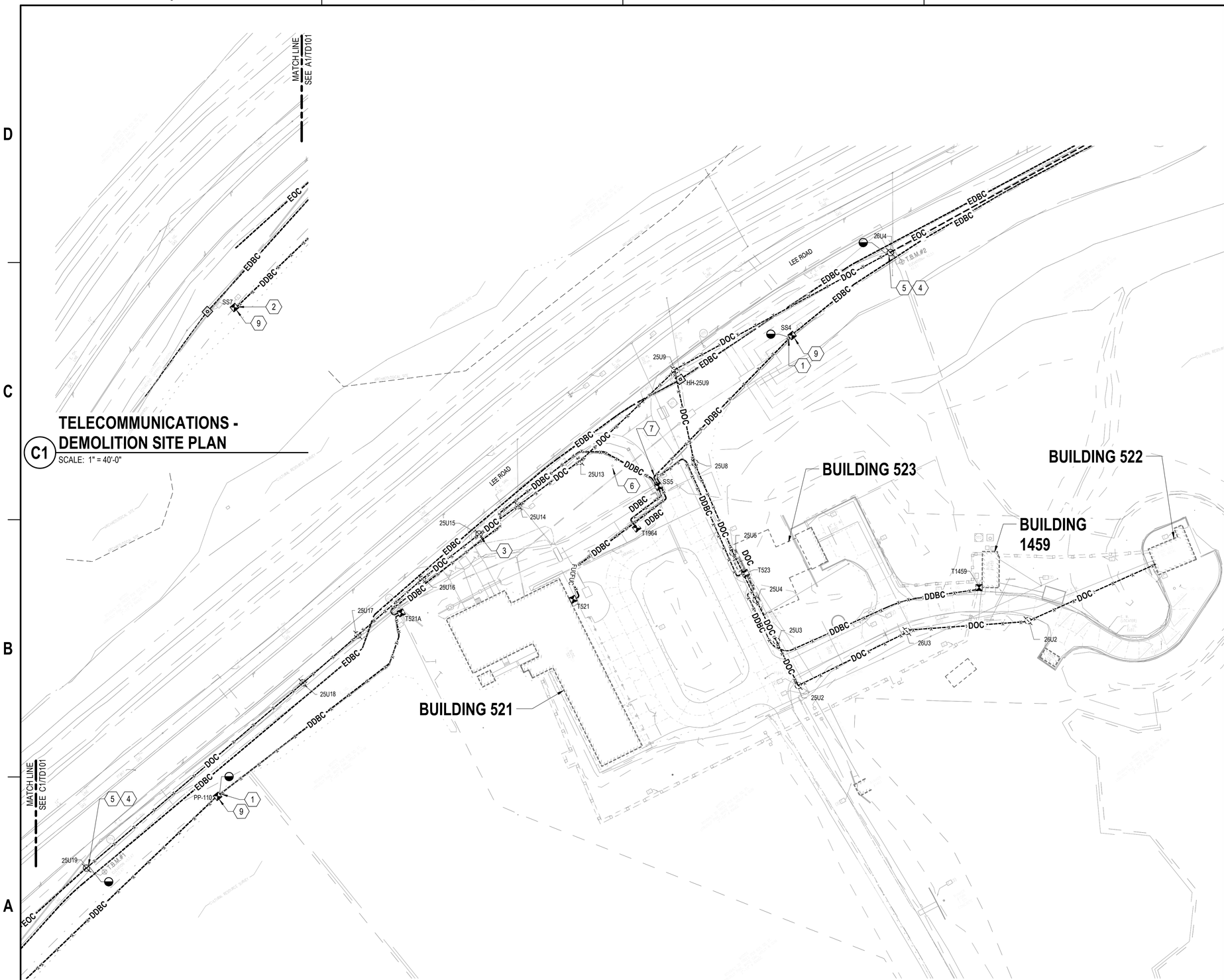

TELECOMMUNICATIONS - DEMOLITION SITE PLAN

C1 SCALE: 1" = 40'-0"

TELECOMMUNICATIONS - DEMOLITION SITE PLAN

A1 SCALE: 1" = 40'-0"

GENERAL NOTES

A. EXISTING CULTURAL RESOURCE BOUNDARIES WITHIN OR IN THE VICINITY OF THE WORK AREA ARE SHOWN ON THE DRAWINGS. IF A POTENTIAL CULTURAL RESOURCE IS ENCOUNTERED, SUSPEND ACTIVITIES IN THE IMMEDIATE AREA AND NOTIFY THE CONTRACTING OFFICER'S REPRESENTATIVE. DO NOT RESUME WORK IN THE AREA UNTIL DIRECTED. REFER TO SPECIFICATION SECTION 01 57 19 FOR ADDITIONAL INFORMATION.
B. SEE CIVIL DRAWINGS FOR EXISTING CONDITIONS AND SITE CONSTRUCTION DETAILS.
C. SEE A1/TD601 FOR UNDERGROUND OSP DEMOLITION RISER DIAGRAM.
D. SEE C1/TD601 FOR OVERHEAD OSP DEMOLITION RISER DIAGRAM.

NOTES

1 HAND EXCAVATE TO EXPOSE EXISTING UNDERGROUND DIRECT BURIED FIBER OPTIC CABLE AND DIRECT BURIED COPPER CABLE.
2 REMOVE EXISTING CABLING TO THIS LOCATION FROM EXISTING PEDESTAL T521A.
3 REMOVE EXISTING OVERHEAD COMMUNICATIONS CABLING FROM THIS POLE, SEE SITE POWER PLAN FOR ADDITIONAL REQUIREMENTS
4 EXISTING POLE TO REMAIN, PROVIDE GUY WIRE LINE KITS AND ANCHOR RODS AS REQUIRED. SEE POLE GUY ANCHOR DETAIL A1/TS504.
5 REMOVE EXISTING OVERHEAD COMMUNICATIONS CABLING BACK TO THIS POLE.
6 EXISTING COMMUNICATION SYSTEM ANTENNA TO REMAIN.
7 REMOVE EXISTING CABLING TO THIS LOCATION FROM EXISTING PEDESTAL SS5.
9 REMOVE EXISTING PEDESTAL, SEE NEW SITE PLANS FOR ADDITIONAL REQUIREMENTS.

KEY PLAN

TRUE NORTH

GRAPHIC SCALE(S)

1" = 40' 0 20' 40' 80' 160'

SYM	DESCRIPTION	DATE	APPR

NAVFAC

REGISTERED COMMUNICATIONS DISTRIBUTION DESIGNER
Bicsi
5 June 2025
DONALD R SELLERS
REG. NO. 110645
EXPIRES 12-31-2025
RCDD
SEAL

BAMFORTH ENGINEERS + SURVEYORS

A/E INFO

APPROVED
Vincent E. Greco, R.A.
FOR COMMANDER NAVFAC 4/28/2026

ACTIVITY
APPROVED BY
LCDR VINCE DEL GRECO, FEAD
PWD YORKTOWN, VA, VIA EMAIL
SATISFACTORY TO DATE 06/12/2025

DES MES	DRW MES	CHK DRS	
PM/DM			RY / KJY
BRANCH MANAGER			WRB
CHIEF ENG/ARCH			JWJ
FIRE PROTECTION			HPN

DEPARTMENT OF THE NAVY
NAVAL FACILITIES ENGINEERING SYSTEMS COMMAND
MID-LANT DC CORE
NAVAL FACILITIES ENGINEERING SYSTEMS COMMAND - MID-ATLANTIC
NORFOLK, VA
NAVAL WEAPONS STATION
YORKTOWN, VIRGINIA
P-1419 CONVENTIONAL PROMPT STRIKE (CPS)
WEAPONS TEST FACILITY
TELECOMMUNICATIONS SITE PLAN - DEMOLITION

SCALE: AS NOTED
EPROJECT NO.: 1783999
CONSTR. CONTR. NO.
NAVFAC DRAWING NO. 12931108
SHEET 354 OF 427

TD101

DRAWFORM REVISION: 14 SEPTEMBER 2023

7/3/2025 1:55:11 PM TD101
Autodesk Docs://23189.00 - P-1419 CPS WT Facility/BLDG-P1419-1783999-T_v24.rvt

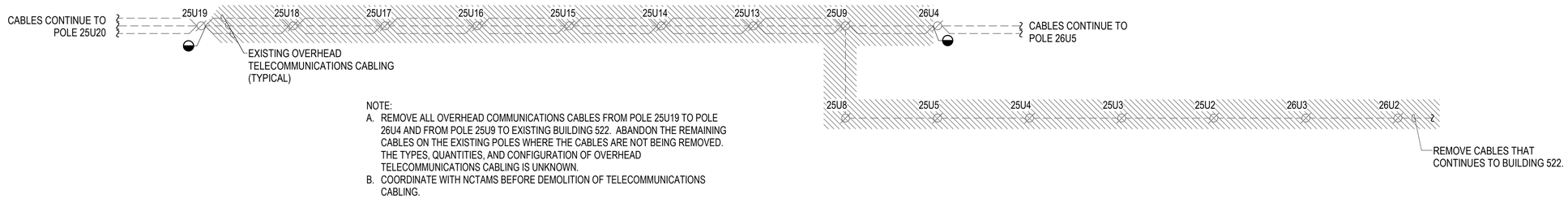

NOTE:
A. REMOVE ALL OVERHEAD COMMUNICATIONS CABLES FROM POLE 25U19 TO POLE 26U4 AND FROM POLE 25U9 TO EXISTING BUILDING 522. ABANDON THE REMAINING CABLES ON THE EXISTING POLES WHERE THE CABLES ARE NOT BEING REMOVED. THE TYPES, QUANTITIES, AND CONFIGURATION OF OVERHEAD TELECOMMUNICATIONS CABLING IS UNKNOWN.
B. COORDINATE WITH NCTAMS BEFORE DEMOLITION OF TELECOMMUNICATIONS CABLING.

OVERHEAD CABLING RISER - DEMOLITION

C1 OVERHEAD OSP DEMOLITION RISER DIAGRAM

SCALE: NTS

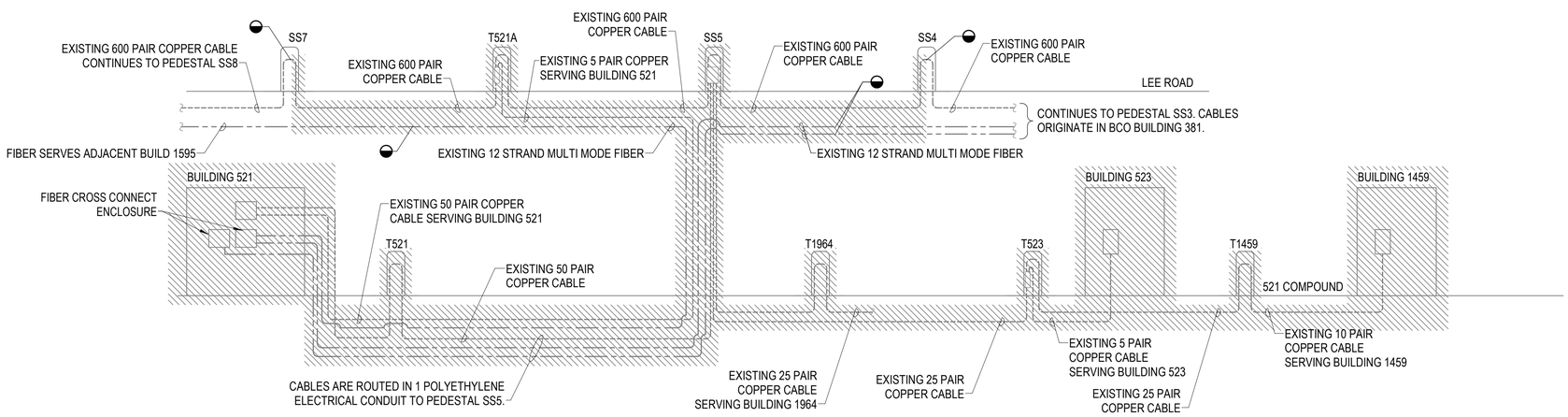

UNDERGROUND CABLING RISER - DEMOLITION

A1 UNDERGROUND OSP DEMOLITION RISER DIAGRAM

SCALE: NTS

SYM	DESCRIPTION	DATE	APPR

NAVFAC

REGISTERED COMMUNICATIONS DISTRIBUTION DESIGNER
DONALD R SELLERS
REG. NO. 110645
EXPIRES 12-31-2025
RCDD
SEAL

BAMFORTH ENGINEERS + SURVEYORS

A/E INFO

APPROVED
CAPT, CEC, USN
FOR COMMANDER NAVFAC

ACTIVITY
APPROVED BY
LCDR VINCE DEL GRECO, FEAD
PWD YORKTOWN, VA, VIA EMAIL
SATISFACTORY TO DATE 06/12/2025

DES MES	DRW MES	CHK DRS	
PM/DM			RY / KJY
BRANCH MANAGER			WRB
CHIEF ENG/ARCH			JWJ
FIRE PROTECTION			HPN

DEPARTMENT OF THE NAVY
NAVAL FACILITIES ENGINEERING SYSTEMS COMMAND
MIDLANT DC CORE
NAVAL FACILITIES ENGINEERING SYSTEMS COMMAND - MID-ATLANTIC
NORFOLK, VA
NAVAL WEAPONS STATION
YORKTOWN, VIRGINIA
P-1419 CONVENTIONAL PROMPT STRIKE (CPS)
WEAPONS TEST FACILITY
OSP RISER DIAGRAM - DEMOLITION

SCALE: AS NOTED
EPROJECT NO.: 1783999
CONSTR. CONTR. NO.
NAVFAC DRAWING NO.
12931109
SHEET 355 OF 427

TD601

DRAWFORM REVISION: 14 SEPTEMBER 2023

TD601
7/3/2025 1:55:11 PM
Autodesk Docs://23189.00 - P-1419 OPS WT Facility/BLDG-P1419-1783999-T_v24.rvt

A1 TELECOMMUNICATIONS SITE PLAN OVERALL - SOUTH

SCALE: 1" = 400'-0"

GENERAL NOTES

NOTES

KEY PLAN

TRUE NORTH

GRAPHIC SCALE(S)

1" = 400' 0 200' 400' 800' 1200' 1600'

SYM	DESCRIPTION	DATE	APPR

NAVFAC

REGISTERED COMMUNICATIONS DISTRIBUTION DESIGNER
Bicsi
Donald R. Sellers 2025
DONALD R SELLERS
REG. NO. 110645
EXPIRES 12-31-2025
RCDD
SEAL

BAMFORTH
ENGINEERS + SURVEYORS

A/E INFO

APPROVED
James E. Jordan, P.E.
FOR COMMANDER NAVFAC 4/22/2026

ACTIVITY:
APPROVED BY
LCDR VINCE DEL GRECO, FEAD
PWD YORKTOWN, VA, VIA EMAIL

SATISFACTORY TO DATE 06/12/2025

DES	MES	DRW	MES	CHK	DRS

PM/DM	RY / KJY
BRANCH MANAGER	WRB
CHIEF ENG/ARCH	JWJ
FIRE PROTECTION	HPN

DEPARTMENT OF THE NAVY
NAVAL FACILITIES ENGINEERING SYSTEMS COMMAND
MIDLANT DC CORE
NAVAL FACILITIES ENGINEERING SYSTEMS COMMAND - MID-ATLANTIC
NORFOLK, VA
NAVAL WEAPONS STATION
YORKTOWN, VIRGINIA
P-1419 CONVENTIONAL PROMPT STRIKE (CPS)
WEAPONS TEST FACILITY
TELECOMMUNICATIONS OVERALL SITE PLAN - SOUTH

SCALE: AS NOTED
EPROJECT NO.: 1783999
CONSTR. CONTR. NO.
NAVFAC DRAWING NO.
12931110
SHEET 356 OF 427

TS100

DRAWFORM REVISION: 14 SEPTEMBER 2023

7/30/2025 1:55:20 PM TS100
Autodesk Docs://23189.00 - P-1419 CPS WT Facility/BLDG-P1419-1783999-T_v24.rvt

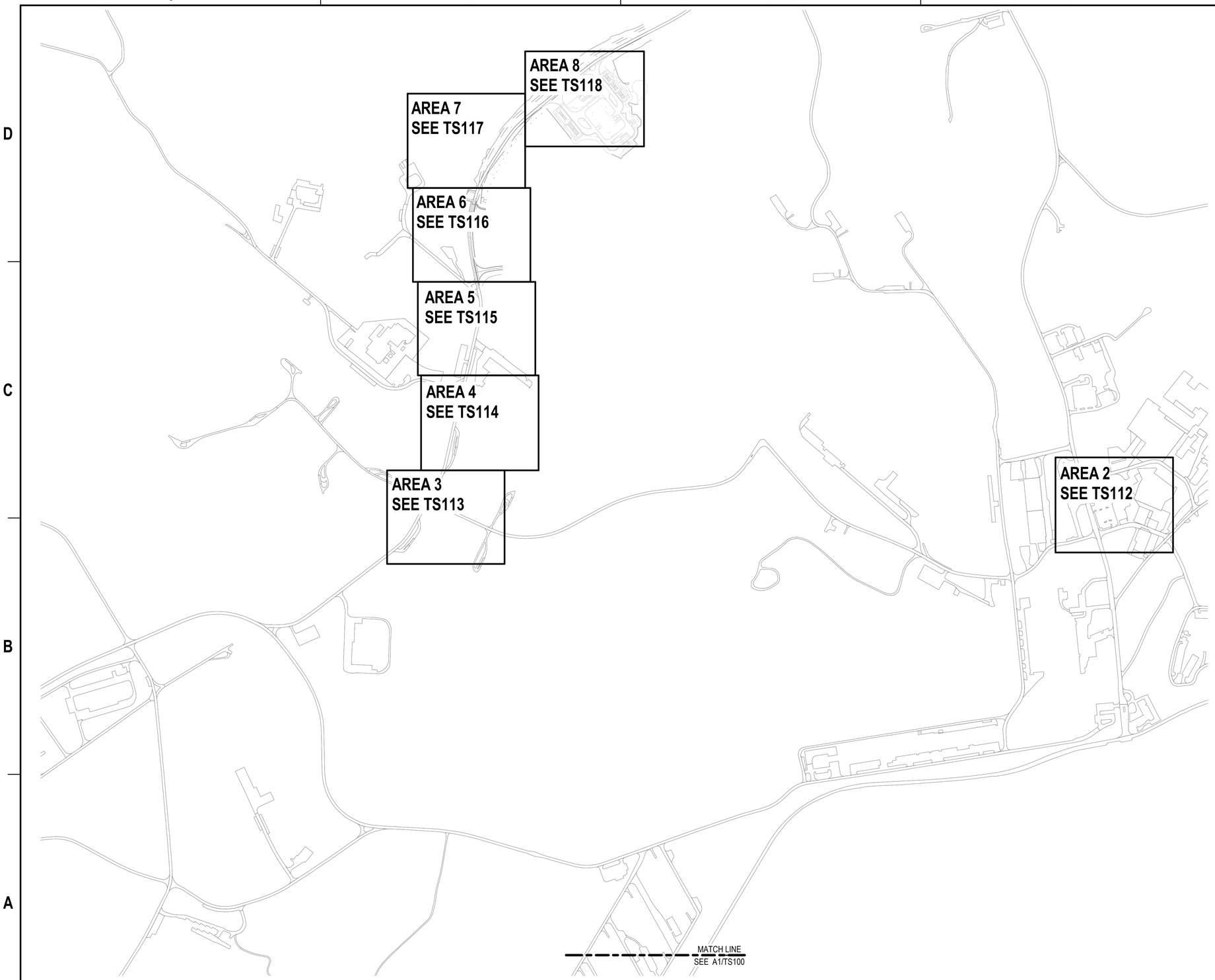

A1 TELECOMMUNICATIONS SITE PLAN OVERALL - NORTH

SCALE: 1" = 400'-0"

GENERAL NOTES

NOTES

KEY PLAN

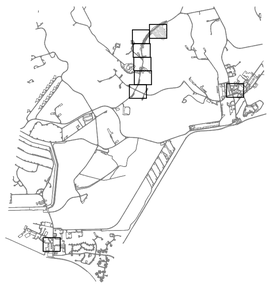

TRUE NORTH

GRAPHIC SCALE(S)

1" = 400' 0 200' 400' 800' 1200' 1600'

SYM	DESCRIPTION	DATE	APPR

NAVFAC

REGISTERED COMMUNICATIONS DISTRIBUTION DESIGNER
Bicsi
Donald R. Sellers 5 June 2025
DONALD R SELLERS
REG. NO. 110645
EXPIRES 12-31-2025
RCDD
SEAL

BAMFORTH ENGINEERS + SURVEYORS

AVE INFO

APPROVED
James E. Lowder, P.E.
FOR COMMANDER NAVFAC 4/22/2026

ACTIVITY
APPROVED BY
LCDR VINCE DEL GRECO, FEAD
PWD YORKTOWN, VA, VIA EMAIL

SATISFACTORY TO DATE 06/12/2025

DES	MES	DRW	MES	CHK	DRS

PMDM RY / KJY
BRANCH MANAGER WRB
CHIEF ENG/ARCH JWJ
FIRE PROTECTION HPN

DEPARTMENT OF THE NAVY
NAVAL FACILITIES ENGINEERING SYSTEMS COMMAND
MIDLANT DC CORE
NAVAL FACILITIES ENGINEERING SYSTEMS COMMAND - MID-ATLANTIC
NORFOLK, VA
NAVAL WEAPONS STATION
YORKTOWN, VIRGINIA
P-1419 CONVENTIONAL PROMPT STRIKE (CPS)
WEAPONS TEST FACILITY
TELECOMMUNICATIONS OVERALL SITE PLAN - NORTH

SCALE: AS NOTED
EPROJECT NO.: 1783999
CONSTR. CONTR. NO.
NAVFAC DRAWING NO.
12931111
SHEET 357 OF 427

TS101

DRAW/FORM REVISION: 14 SEPTEMBER 2023

TS101
7/3/2025 1:55:31 PM
Autodesk Docs://2189.00 - P-1419 CPS WT Facility/BLDG-P1419-1783999-T_v24.rvt

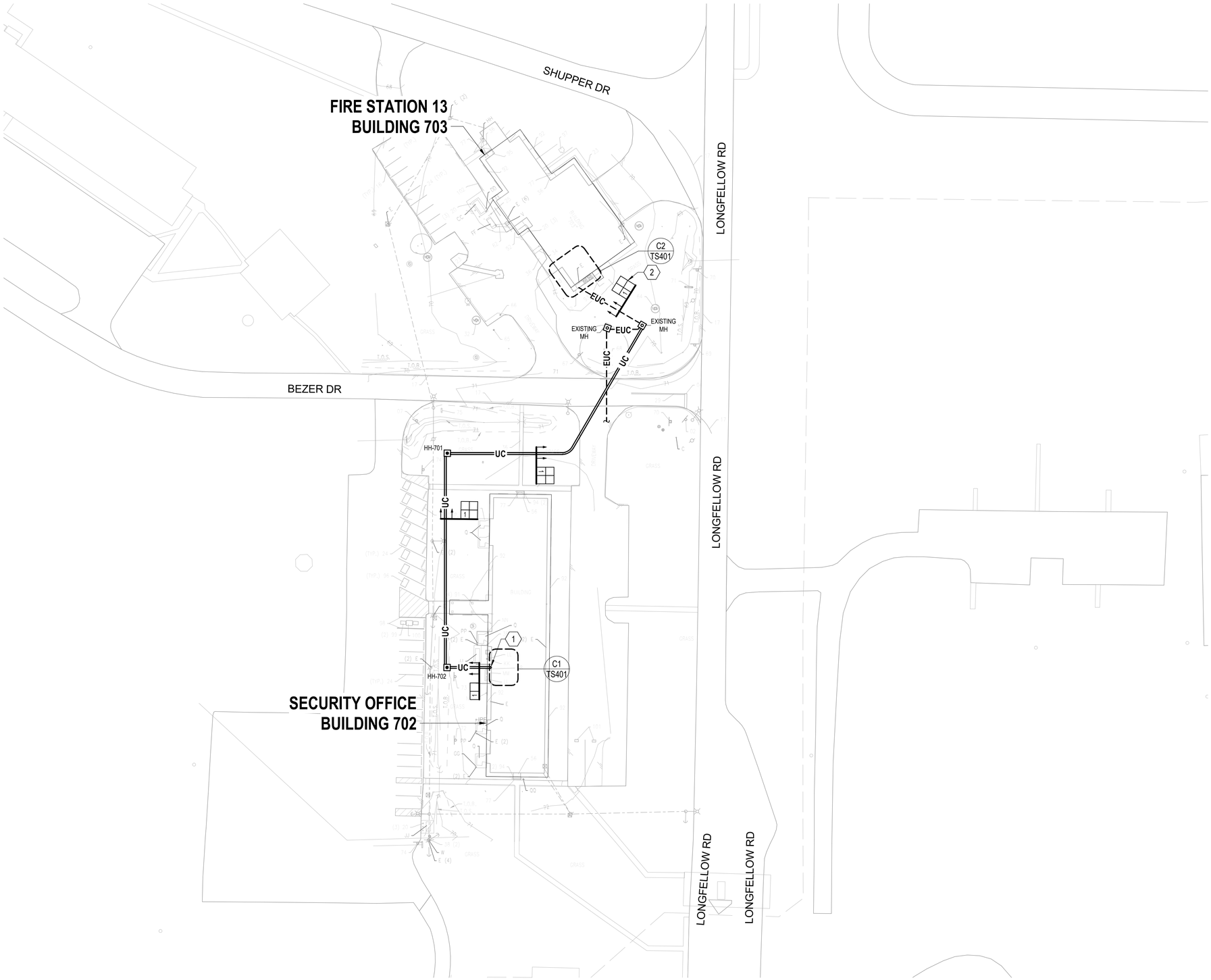

A1 TELECOMMUNICATIONS SITE PLAN - AREA 1

SCALE: 1" = 40'-0"

GENERAL NOTES

A. EXISTING CULTURAL RESOURCE BOUNDARIES WITHIN OR IN THE VICINITY OF THE WORK AREA ARE SHOWN ON THE DRAWINGS. IF A POTENTIAL CULTURAL RESOURCE IS ENCOUNTERED, SUSPEND ACTIVITIES IN THE IMMEDIATE AREA AND NOTIFY THE CONTRACTING OFFICER'S REPRESENTATIVE. DO NOT RESUME WORK IN THE AREA UNTIL DIRECTED. REFER TO SPECIFICATION SECTION 01 57 19 FOR ADDITIONAL INFORMATION.
B. REFERENCE CIVIL SHEETS CV105 - CV116 FOR UTILITIES AND SITE TOPOGRAPHY.
C. PROVIDE NON-ENCASED DUCT BANKS UNDER BASE BID. PROVIDE CONCRETE ENCASED DUCT BANKS UNDER BID OPTION.
D. REFERENCE CIVIL SHEETS FOR PAVEMENT PATCH AND OFFSITE EROSION AND SEDIMENT CONTROL NOTES.
E. DIRECTIONAL DRILLING UNDER BEEZER ROAD IS ALLOWED.
F. PERFORM ALL OFF-SITE TELECOMMUNICATIONS WORK AT THE BEGINNING OF THE PROJECT. COORDINATE THIS WORK WITH THE CONTRACTING OFFICER AND P171 PROJECT.

NOTES

1 EXTERIOR BUILDING MOUNTED CONDUITS. ROUTE ON EXTERIOR WALL OF BUILDING 702. ROUTE HORIZONTALLY AT HIGHEST POSSIBLE HEIGHT TO THE COMM ROOM 112. STUB CONDUITS OUT INTO COMM ROOM. SEE ELEVATION DETAILA2/TS505 FOR ADDITIONAL INFORMATION.

2 ROUTE CABLE THROUGH EXISTING CONDUIT AND EXTEND CABLE TO EXISTING EQUIPMENT RACK 002 AS INDICATED ON C2/TS401.

KEY PLAN

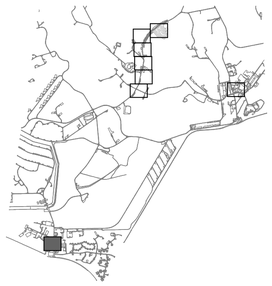

TRUE NORTH

GRAPHIC SCALE(S)

1" = 40' 0 20' 40' 80' 160'

SYM	DESCRIPTION	DATE	APPR

NAVFAC

REGISTERED COMMUNICATIONS DISTRIBUTION DESIGNER
Biggi
Donald R. Sellers
Jun 2025
DONALD R SELLERS
REG. NO. 110645
EXPIRES 12-31-2025
RCDD
SEAL

BAMFORTH ENGINEERS + SURVEYORS

A/E INFO

APPROVED
James E. Donahue, R.A.
FOR COMMANDER NAVFAC 4/22/2026

ACTIVITY
APPROVED BY
LCDR VINCE DEL GRECO, FEAD
PWD YORKTOWN, VA, VIA EMAIL
SATISFACTORY TO DATE 06/12/2025

DES MES	DRW MES	CHK DRS	
PM/DM			RY / KJY
BRANCH MANAGER			WRB
CHIEF ENG/ARCH			JWJ
FIRE PROTECTION			HPN

DEPARTMENT OF THE NAVY
NAVAL FACILITIES ENGINEERING SYSTEMS COMMAND
MIDLANT DC CORE
NAVAL FACILITIES ENGINEERING SYSTEMS COMMAND - MID-ATLANTIC
NORFOLK, VA
NAVAL WEAPONS STATION
YORKTOWN, VIRGINIA
P-1419 CONVENTIONAL PROMPT STRIKE (CPS)
WEAPONS TEST FACILITY
TELECOMMUNICATIONS SITE PLAN - AREA 1

SCALE: AS NOTED
EPROJECT NO.: 1783999
CONSTR. CONTR. NO.
NAVFAC DRAWING NO. 12931112
SHEET 358 OF 427
TS111

DRAW/FORM REVISION: 14 SEPTEMBER 2023

7/3/2025 1:55:40 PM TS111
Autodesk Docs://23189.00 - P-1419 CPS WT Facility/BLDG-P1419-1783999-T_v24.rvt

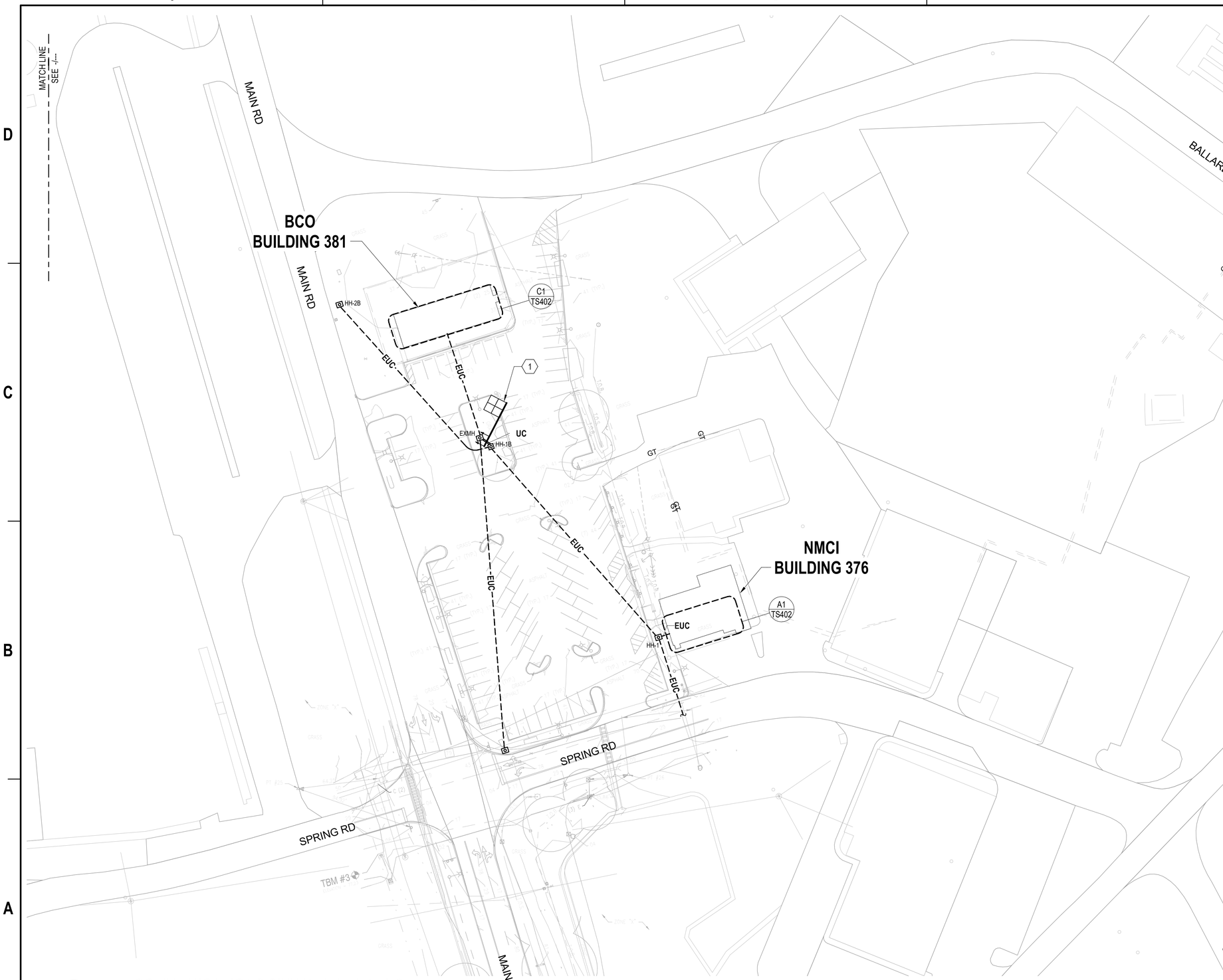

A1 TELECOMMUNICATIONS SITE PLAN - AREA 2

SCALE: 1" = 40'-0"

GENERAL NOTES

A. EXISTING CULTURAL RESOURCE BOUNDARIES WITHIN OR IN THE VICINITY OF THE WORK AREA ARE SHOWN ON THE DRAWINGS. IF A POTENTIAL CULTURAL RESOURCE IS ENCOUNTERED, SUSPEND ACTIVITIES IN THE IMMEDIATE AREA AND NOTIFY THE CONTRACTING OFFICER'S REPRESENTATIVE. DO NOT RESUME WORK IN THE AREA UNTIL DIRECTED. REFER TO SPECIFICATION SECTION 01 57 19 FOR ADDITIONAL INFORMATION.

B. PROVIDE NON-ENCASED DUCT BANKS UNDER BASE BID. PROVIDE CONCRETE ENCASED DUCT BANKS UNDER BID OPTION.

C. REFERENCE CIVIL SHEETS CV105 - CV116 FOR UTILITIES AND SITE TOPOGRAPHY.

D. REFERENCE CIVIL SHEETS FOR PAVEMENT PATCH AND OFFSITE EROSION AND SEDIMENT CONTROL NOTES.

E. PERFORM ALL OFF-SITE TELECOMMUNICATIONS WORK AT THE BEGINNING OF THE PROJECT. COORDINATE THIS WORK WITH THE CONTRACTING OFFICER AND P171 PROJECT.

NOTES

1 SEE OSP RISER DIAGRAM C1/TS601 FOR CABLING REQUIRMENTS.

KEY PLAN

TRUE NORTH

GRAPHIC SCALE(S)

1" = 40' 0 20' 40' 80' 160'

SYM	DESCRIPTION	DATE	APPR

NAVFAC

REGISTERED COMMUNICATIONS DISTRIBUTION DESIGNER
Bicsi
Expires 2025
DONALD R SELLERS
REG. NO. 110645
EXPIRES 12-31-2025
RCDD
SEAL

BAMFORTH ENGINEERS + SURVEYORS

A/E INFO

APPROVED
Carlos E. Gonzalez, R.A.
FOR COMMANDER NAVFAC 4/28/2026

ACTIVITY
APPROVED BY
LCDR VINCE DEL GRECO, FEAD
PWD YORKTOWN, VA, VIA EMAIL

SATISFACTORY TO DATE 06/12/2025

DES	MES	DRW MES	CHK DRS
PM/DM	RY / KJY		
BRANCH MANAGER	WRB		
CHIEF ENG/ARCH	JWJ		
FIRE PROTECTION	HPN		

DEPARTMENT OF THE NAVY
NAVAL FACILITIES ENGINEERING SYSTEMS COMMAND
MID-LANT DC CORE
NAVAL FACILITIES ENGINEERING SYSTEMS COMMAND - MID-ATLANTIC
NORFOLK, VA
NAVAL WEAPONS STATION
YORKTOWN, VIRGINIA
P-1419 CONVENTIONAL PROMPT STRIKE (CPS)
WEAPONS TEST FACILITY
TELECOMMUNICATIONS SITE PLAN - AREA 2

SCALE: AS NOTED
EPROJECT NO.: 1783999
CONSTR. CONTR. NO.
NAVFAC DRAWING NO. 12931113
SHEET 359 OF 427

TS112

DRAWFORM REVISION: 14 SEPTEMBER 2023

7/3/2025 1:55:50 PM TS112
Autodesk Docs://23 889.00 - P-1419 CPS WT Facility/BLDG-P1419-1783999-T_v24.rvt

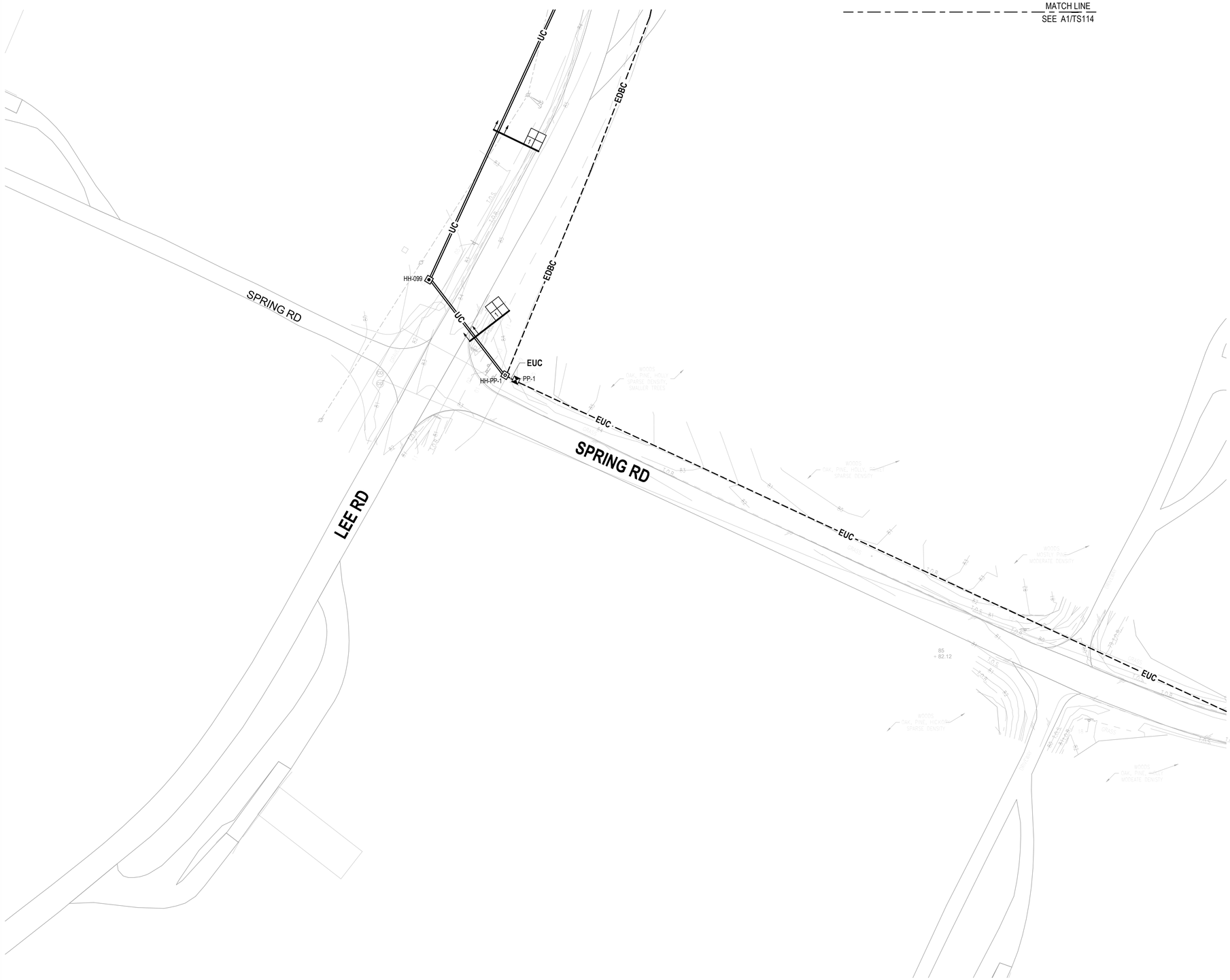

A1 TELECOMMUNICATIONS SITE PLAN - AREA 3

SCALE: 1" = 40'-0"

GENERAL NOTES

A. EXISTING CULTURAL RESOURCE BOUNDARIES WITHIN OR IN THE VICINITY OF THE WORK AREA ARE SHOWN ON THE DRAWINGS. IF A POTENTIAL CULTURAL RESOURCE IS ENCOUNTERED, SUSPEND ACTIVITIES IN THE IMMEDIATE AREA AND NOTIFY THE CONTRACTING OFFICER'S REPRESENTATIVE. DO NOT RESUME WORK IN THE AREA UNTIL DIRECTED. REFER TO SPECIFICATION SECTION 01 57 19 FOR ADDITIONAL INFORMATION.
B. SEE TS601 FOR OSP RISER DIAGRAM.
C. SEE CIVIL DRAWINGS FOR EXISTING CONDITIONS AND SITE CONSTRUCTION DETAILS.
D. PROVIDE NON-ENCASED DUCT BANKS UNDER BASE BID. PROVIDE CONCRETE ENCASED DUCT BANKS UNDER BID OPTION.
E. REFERENCE CIVIL SHEETS CV105 - CV116 FOR UTILITIES AND SITE TOPOGRAPHY.
F. PERFORM ALL OFF-SITE TELECOMMUNICATIONS WORK AT THE BEGINNING OF THE PROJECT. COORDINATE THIS WORK WITH THE CONTRACTING OFFICER AND P171 PROJECT.

NOTES

KEY PLAN

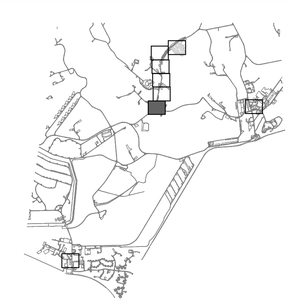

TRUE NORTH

GRAPHIC SCALE(S)

1" = 40' 0 20' 40' 80' 160'

SYM	DESCRIPTION	DATE	APPR

NAVFAC

REGISTERED COMMUNICATIONS DISTRIBUTION DESIGNER
Bicsi
Jun 2025
DONALD R SELLERS
REG. NO. 110645
EXPIRES 12-31-2025
RCDD
SEAL

BAMFORTH ENGINEERS + SURVEYORS

A/E INFO

APPROVED
Lance T. Donohue, R.A.
FOR COMMANDER NAVFAC 4/28/2026

ACTIVITY
APPROVED BY
LCDR VINCE DEL GRECO, FEAD
PWD YORKTOWN, VA, VIA EMAIL

SATISFACTORY TO DATE 06/12/2025

DES	MES	DRW	MES	CHK	DRS

PM/DM	RY / KJY
BRANCH MANAGER	WRB
CHIEF ENG/ARCH	JWJ
FIRE PROTECTION	HPN

DEPARTMENT OF THE NAVY
NAVAL FACILITIES ENGINEERING SYSTEMS COMMAND
MIDLANT DC CORE
NAVAL FACILITIES ENGINEERING SYSTEMS COMMAND - MID-ATLANTIC
NORFOLK, VA
NAVAL WEAPONS STATION
YORKTOWN, VIRGINIA
P-1419 CONVENTIONAL PROMPT STRIKE (CPS)
WEAPONS TEST FACILITY
TELECOMMUNICATIONS SITE PLAN - AREA 3

SCALE: AS NOTED
EPROJECT NO.: 1783999
CONSTR. CONTR. NO.
NAVFAC DRAWING NO. 12931114
SHEET 360 OF 427

TS113

DRAWFORM REVISION: 14 SEPTEMBER 2023

7/3/2025 1:55:57 PM TS113
Autodesk Docs://23189.00 - P-1419 CPS WT Facility/BLDG-P1419-1783999-T_v24.rvt

A1 TELECOMMUNICATIONS SITE PLAN - AREA 4

SCALE: 1" = 40'-0"

GENERAL NOTES

A. EXISTING CULTURAL RESOURCE BOUNDARIES WITHIN OR IN THE VICINITY OF THE WORK AREA ARE SHOWN ON THE DRAWINGS. IF A POTENTIAL CULTURAL RESOURCE IS ENCOUNTERED, SUSPEND ACTIVITIES IN THE IMMEDIATE AREA AND NOTIFY THE CONTRACTING OFFICER'S REPRESENTATIVE. DO NOT RESUME WORK IN THE AREA UNTIL DIRECTED. REFER TO SPECIFICATION SECTION 01 57 19 FOR ADDITIONAL INFORMATION.
B. SEE TS601 FOR OSP RISER DIAGRAM.
C. SEE CIVIL DRAWINGS FOR EXISTING CONDITIONS AND SITE CONSTRUCTION DETAILS.
D. PROVIDE NON-ENCASED DUCT BANKS UNDER BASE BID. PROVIDE CONCRETE ENCASED DUCT BANKS UNDER BID OPTION.
E. REFERENCE CIVIL SHEETS CV105 - CV116 FOR UTILITIES AND SITE TOPOGRAPHY.
F. PERFORM ALL OFF-SITE TELECOMMUNICATIONS WORK AT THE BEGINNING OF THE PROJECT. COORDINATE THIS WORK WITH THE CONTRACTING OFFICER AND P171 PROJECT.

NOTES

KEY PLAN

TRUE NORTH

GRAPHIC SCALE(S)

1" = 40' 0 20' 40' 80' 160'

SYM	DESCRIPTION	DATE	APPR

NAVFAC

REGISTERED COMMUNICATIONS DISTRIBUTION DESIGNER
Bicsi
Donald R. Sellers 26 Jun 2025
DONALD R SELLERS
REG. NO. 110645
EXPIRES 12-31-2025
RCDD
SEAL

BAMFORTH ENGINEERS + SURVEYORS

A/E INFO

APPROVED
Jason E. Donahue, R.A.
FOR COMMANDER NAVFAC 6/26/2025

ACTIVITY
APPROVED BY
LCDR VINCE DEL GRECO, FEAD
PWD YORKTOWN, VA, VIA EMAIL

SATISFACTORY TO DATE 06/12/2025

DES MES	DRW MES	CHK DRS	
PM/DM	RY / KJY		
BRANCH MANAGER	WRB		
CHIEF ENG/ARCH	JWJ		
FIRE PROTECTION	HPN		

DEPARTMENT OF THE NAVY
NAVAL FACILITIES ENGINEERING SYSTEMS COMMAND
MIDLANT DC CORE
NAVAL FACILITIES ENGINEERING SYSTEMS COMMAND - MID-ATLANTIC
NORFOLK, VA
NAVAL WEAPONS STATION
YORKTOWN, VIRGINIA
P-1419 CONVENTIONAL PROMPT STRIKE (CPS)
WEAPONS TEST FACILITY
TELECOMMUNICATIONS SITE PLAN - AREA 4

SCALE: AS NOTED
EPROJECT NO.: 1783999
CONSTR. CONTR. NO.
NAVFAC DRAWING NO. 12931115
SHEET 361 OF 427
TS114

DRAWFORM REVISION: 14 SEPTEMBER 2023

7/3/2025 1:50:05 PM TS114
Autodesk Docs://23189.00 - P-1419 CPS WT Facility/BLDG-P1419-1783999-T_v24.rvt

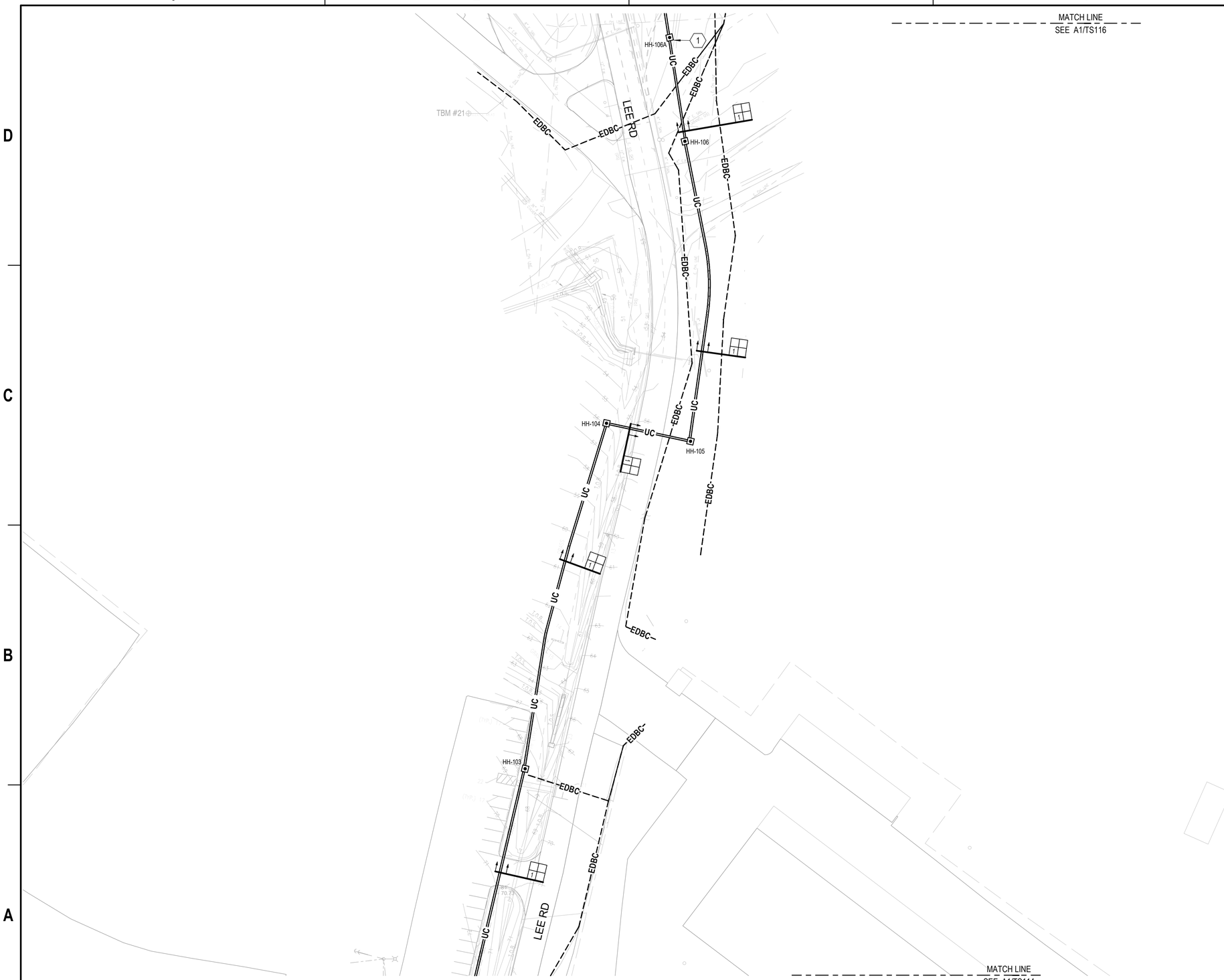

A1 TELECOMMUNICATIONS SITE PLAN - AREA 5

SCALE: 1" = 40'-0"

GENERAL NOTES

A. EXISTING CULTURAL RESOURCE BOUNDARIES WITHIN OR IN THE VICINITY OF THE WORK AREA ARE SHOWN ON THE DRAWINGS. IF A POTENTIAL CULTURAL RESOURCE IS ENCOUNTERED, SUSPEND ACTIVITIES IN THE IMMEDIATE AREA AND NOTIFY THE CONTRACTING OFFICER'S REPRESENTATIVE. DO NOT RESUME WORK IN THE AREA UNTIL DIRECTED. REFER TO SPECIFICATION SECTION 01 57 19 FOR ADDITIONAL INFORMATION.
B. SEE TS601 FOR OSP RISER DIAGRAM.
C. SEE CIVIL DRAWINGS FOR EXISTING CONDITIONS AND SITE CONSTRUCTION DETAILS.
D. PROVIDE NON-ENCASED DUCT BANKS UNDER BASE BID. PROVIDE CONCRETE ENCASED DUCT BANKS UNDER BID OPTION.
E. REFERENCE CIVIL SHEETS CV105 - CV116 FOR UTILITIES AND SITE TOPOGRAPHY.
F. PERFORM ALL OFF-SITE TELECOMMUNICATIONS WORK AT THE BEGINNING OF THE PROJECT. COORDINATE THIS WORK WITH THE CONTRACTING OFFICER AND P171 PROJECT.

NOTES

1 COORDINATE ELEVATION OF HANDHOLE WITH FUTURE P171 GRADES. OBTAIN FINAL GRADE ELEVATIONS FOR THE P171 PROJECT FROM THE CONTRACTING OFFICER.

KEY PLAN

TRUE NORTH

GRAPHIC SCALE(S)

1" = 40' 0 20' 40' 80' 160'

SYM	DESCRIPTION	DATE	APPR

NAVFAC

REGISTERED COMMUNICATIONS DISTRIBUTION DESIGNER
Bicsi
Sept 2025
DONALD R SELLERS
REG. NO. 110645
EXPIRES 12-31-2025
RCDD
SEAL

BAMFORTH ENGINEERS + SURVEYORS
A/E INFO

APPROVED
Jason E. Donahue, R.A.
FOR COMMANDER NAVFAC 6/26/2025

ACTIVITY
APPROVED BY
LCDR VINCE DEL GRECO, FEAD
PWD YORKTOWN, VA, VIA EMAIL

SATISFACTORY TO DATE 06/12/2025

DES MES	DRW MES	CHK DRS	
PM/DM			RY / KJY
BRANCH MANAGER			WRB
CHIEF ENG/ARCH			JWJ
FIRE PROTECTION			HPN

DEPARTMENT OF THE NAVY
NAVAL FACILITIES ENGINEERING SYSTEMS COMMAND
MIDLANT DC CORE
NAVAL FACILITIES ENGINEERING SYSTEMS COMMAND - MID-ATLANTIC
NORFOLK, VA
NAVAL WEAPONS STATION
YORKTOWN, VIRGINIA
P-1419 CONVENTIONAL PROMPT STRIKE (CPS)
WEAPONS TEST FACILITY
TELECOMMUNICATIONS SITE PLAN - AREA 5

SCALE: AS NOTED
EPROJECT NO.: 1783999
CONSTR. CONTR. NO.
NAVFAC DRAWING NO. 12931116
SHEET 362 OF 427
TS115

DRAWFORM REVISION: 14 SEPTEMBER 2023

7/3/2025 1:56:12 PM TS115
Autodesk Docs://231889.00 - P-1419 CPS WT Facility/BLDG-P1419-1783999-T_v24.rvt

A1 TELECOMMUNICATIONS SITE PLAN - AREA 6

SCALE: 1" = 40'-0"

GENERAL NOTES

A. EXISTING CULTURAL RESOURCE BOUNDARIES WITHIN OR IN THE VICINITY OF THE WORK AREA ARE SHOWN ON THE DRAWINGS. IF A POTENTIAL CULTURAL RESOURCE IS ENCOUNTERED, SUSPEND ACTIVITIES IN THE IMMEDIATE AREA AND NOTIFY THE CONTRACTING OFFICER'S REPRESENTATIVE. DO NOT RESUME WORK IN THE AREA UNTIL DIRECTED. REFER TO SPECIFICATION SECTION 01 57 19 FOR ADDITIONAL INFORMATION.
B. SEE TS601 FOR OSP RISER DIAGRAM.
C. SEE CIVIL DRAWINGS FOR EXISTING CONDITIONS AND SITE CONSTRUCTION DETAILS.
D. PROVIDE NON-ENCASED DUCT BANKS UNDER BASE BID. PROVIDE CONCRETE ENCASED DUCT BANKS UNDER BID OPTION.
E. REFERENCE CIVIL SHEETS CV105 - CV116 FOR UTILITIES AND SITE TOPOGRAPHY.
F. PERFORM ALL OFF-SITE TELECOMMUNICATIONS WORK AT THE BEGINNING OF THE PROJECT. COORDINATE THIS WORK WITH THE CONTRACTING OFFICER AND P171 PROJECT.

(#) NOTES

1 PROVIDE CONCRETE ENCASEMENT FOR THE GREY SHADED SECTION OF DUCT BANK. COORDINATE ELEVATION OF DUCT BANK WITH FUTURE P171 PROJECT GRADES. FOR BIDDING PURPOSES, ASSUME TOP OF DUCT BANK TO BE AT ELEVATION 41.0 OBTAIN FINAL GRADE ELEVATIONS FOR THE P171 PROJECT FROM THE CONTRACTING OFFICER.
2 COORDINATE ELEVATION OF HANDHOLE WITH FUTURE P171 PROJECT GRADES. OBTAIN FINAL GRADE ELEVATIONS FOR THE P171 PROJECT FROM THE CONTRACTING OFFICER.
3 PROPOSED FUTURE ENTRY DRIVE FOR FUTURE P171 PROJECT, NOT IN CONTRACT.
4 PROPOSED FUTURE STORM DRAIN AND DRAINAGE STRUCTURES FOR FUTURE PROJECT P171, NOT IN CONTRACT. COORDINATE LOCATION OF DUCT BANKS AND HANHOLES WITH THE CONTRACTING OFFICER TO AVOID THESE FUTURE DRAINS AND DRAINAGE STRUCTURES.

KEY PLAN

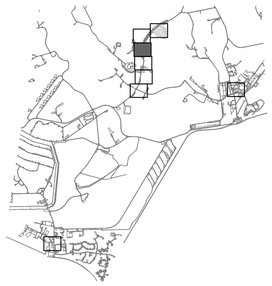

TRUE NORTH

GRAPHIC SCALE(S)

1" = 40' 0 20' 40' 80' 160'

SYM	DESCRIPTION	DATE	APPR

NAVFAC

REGISTERED COMMUNICATIONS DISTRIBUTION DESIGNER
Biggs
5 June 2025
DONALD R SELLERS
REG. NO. 110645
EXPIRES 12-31-2025
RCDD
SEAL

BAMFORTH ENGINEERS + SURVEYORS

A/E INFO

APPROVED
James E. Donahue, R.A.
FOR COMMANDER NAVFAC 4/22/2026

ACTIVITY
APPROVED BY
LCDR VINCE DEL GRECO, FEAD
PWD YORKTOWN, VA, VIA EMAIL
SATISFACTORY TO DATE 06/12/2025

DES	MES	DRW MES	CHK DRS
PM/DM	RY / KJY		
BRANCH MANAGER	WRB		
CHIEF ENG/ARCH	JWJ		
FIRE PROTECTION	HPN		

DEPARTMENT OF THE NAVY
NAVAL FACILITIES ENGINEERING SYSTEMS COMMAND
MIDLANT DC CORE
NAVAL FACILITIES ENGINEERING SYSTEMS COMMAND - MID-ATLANTIC
NORFOLK, VA
NAVAL WEAPONS STATION
YORKTOWN, VIRGINIA
P-1419 CONVENTIONAL PROMPT STRIKE (CPS)
WEAPONS TEST FACILITY
TELECOMMUNICATIONS SITE PLAN - AREA 6

SCALE: AS NOTED
EPROJECT NO.: 1783999
CONSTR. CONTR. NO.
NAVFAC DRAWING NO. 12931117
SHEET 363 OF 427

TS116

DRAWFORM REVISION: 14 SEPTEMBER 2023

TS116
7/3/2025 1:56:22 PM
Autodesk Docs://23189.00 - P-1419 CPS WT Facility/BLDG-P1419-1783999-T_v24.rvt

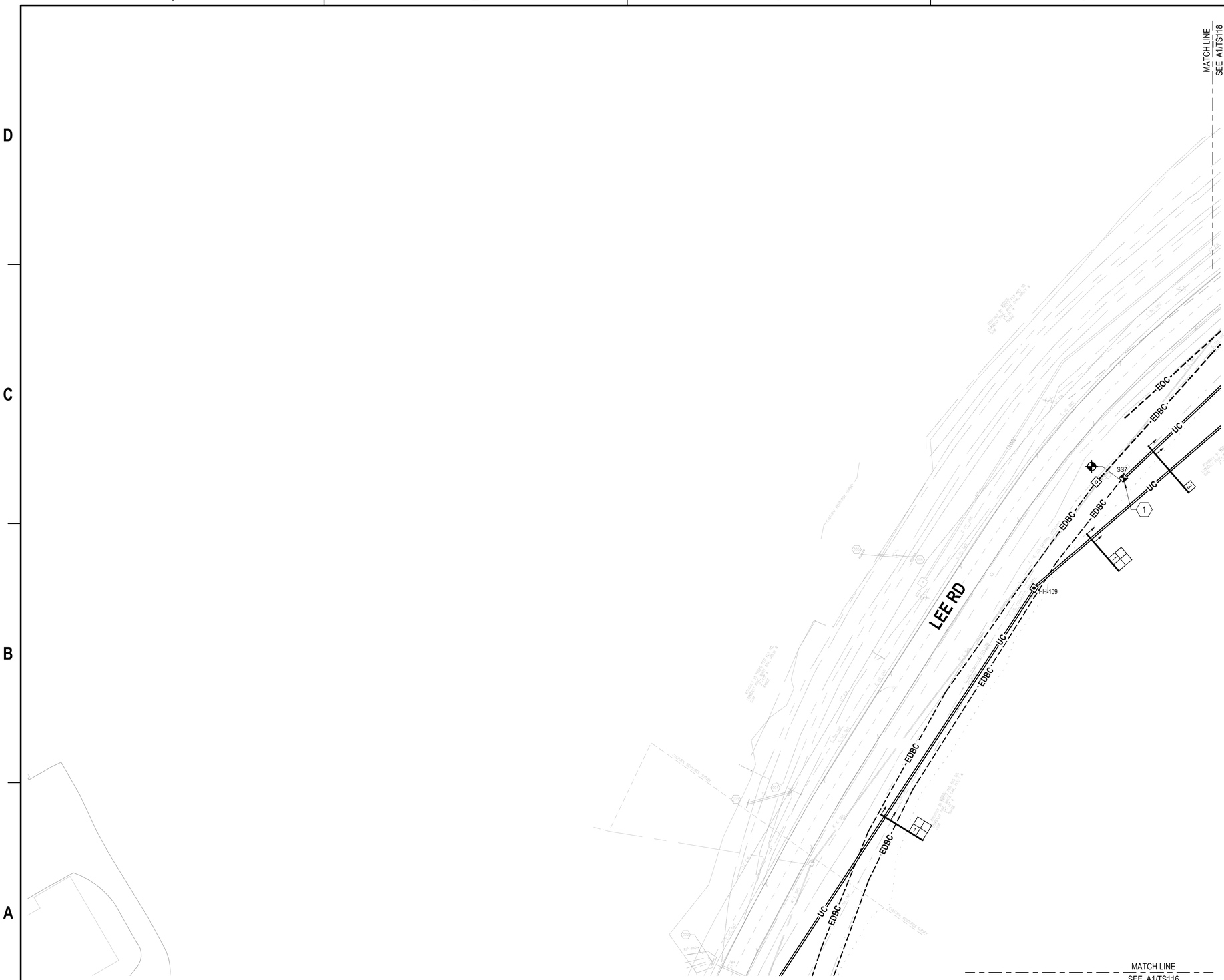

A1 TELECOMMUNICATIONS SITE PLAN - AREA 7

SCALE: 1" = 40'-0"

GENERAL NOTES

A. EXISTING CULTURAL RESOURCE BOUNDARIES WITHIN OR IN THE VICINITY OF THE WORK AREA ARE SHOWN ON THE DRAWINGS. IF A POTENTIAL CULTURAL RESOURCE IS ENCOUNTERED, SUSPEND ACTIVITIES IN THE IMMEDIATE AREA AND NOTIFY THE CONTRACTING OFFICER'S REPRESENTATIVE. DO NOT RESUME WORK IN THE AREA UNTIL DIRECTED. REFER TO SPECIFICATION SECTION 01 57 19 FOR ADDITIONAL INFORMATION.
B. SEE TS601 FOR OSP RISER DIAGRAM.
C. SEE CIVIL DRAWINGS FOR EXISTING CONDITIONS AND SITE CONSTRUCTION DETAILS.
D. PROVIDE NON-ENCASED DUCT BANKS UNDER BASE BID. PROVIDE CONCRETE ENCASED DUCT BANKS UNDER BID OPTION.
E. REFERENCE CIVIL SHEETS CV105 - CV116 FOR UTILITIES AND SITE TOPOGRAPHY.
F. PERFORM ALL OFF-SITE TELECOMMUNICATIONS WORK AT THE BEGINNING OF THE PROJECT. COORDINATE THIS WORK WITH THE CONTRACTING OFFICER AND P171 PROJECT.

NOTES

1 REPLACE EXISTING PEDESTAL WITH LARGER SIZE PEDESTAL TO ACCOMMODATE THE ADDITION OF THE CABLE SPLICES/SPLICE ENCLOSURE AT THIS LOCATION.

KEY PLAN

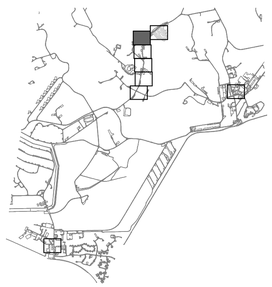

TRUE NORTH

GRAPHIC SCALE(S)

1" = 40' 0 20' 40' 80' 160'

SYM	DESCRIPTION	DATE	APPR

NAVFAC

REGISTERED COMMUNICATIONS DISTRIBUTION DESIGNER
Bicsi
Donald R. Sellers 2025
DONALD R SELLERS
REG. NO. 110645
EXPIRES 12-31-2025
RCDD
SEAL

BAMFORTH ENGINEERS + SURVEYORS

A/E INFO

APPROVED
Lance T. Donohue, R.A.
FOR COMMANDER NAVFAC 4/22/2026

ACTIVITY
APPROVED BY
LCDR VINCE DEL GRECO, FEAD
PWD YORKTOWN, VA, VIA EMAIL
SATISFACTORY TO DATE 06/12/2025

DES MES	DRW MES	CHK DRS	
PM/DM	RY / KJY		
BRANCH MANAGER	WRB		
CHIEF ENG/ARCH	JWJ		
FIRE PROTECTION	HPN		

DEPARTMENT OF THE NAVY
NAVAL FACILITIES ENGINEERING SYSTEMS COMMAND
MIDLANT DC CORE
NAVAL FACILITIES ENGINEERING SYSTEMS COMMAND - MID-ATLANTIC
NORFOLK, VA
NAVAL WEAPONS STATION
YORKTOWN, VIRGINIA
P-1419 CONVENTIONAL PROMPT STRIKE (CPS)
WEAPONS TEST FACILITY
TELECOMMUNICATIONS SITE PLAN - AREA 7

SCALE: AS NOTED
EPROJECT NO.: 1783999
CONSTR. CONTR. NO.
NAVFAC DRAWING NO. 12931118
SHEET 364 OF 427

TS117

DRAWFORM REVISION: 14 SEPTEMBER 2023

7/3/2025 1:56:33 PM TS117
Autodesk Docs://23189.00 - P-1419 CPS WT Facility/BLDG-P1419-1783999-T_v24.rvt

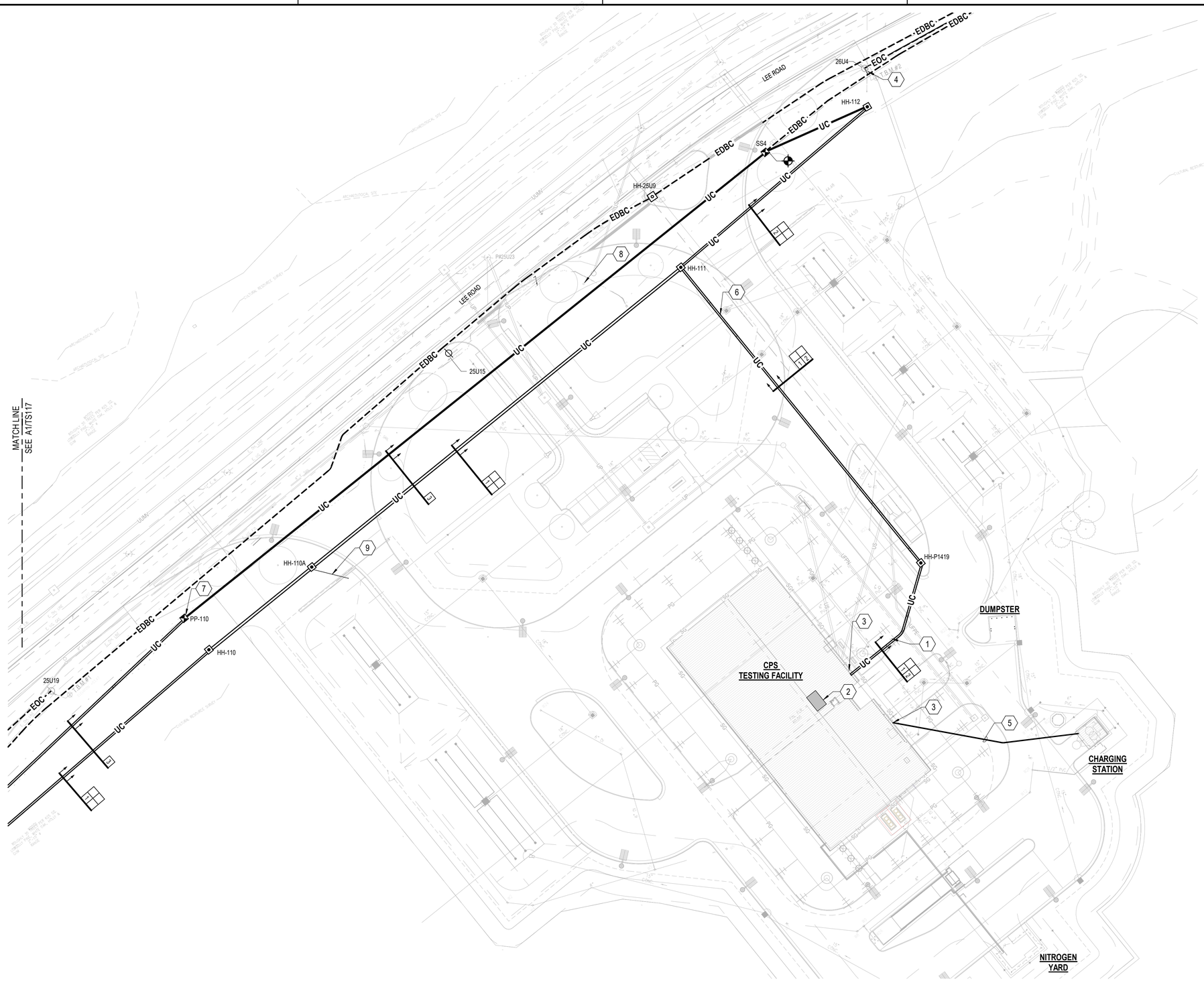

A1 TELECOMMUNICATIONS SITE PLAN - AREA 8

SCALE: 1" = 40'-0"

GENERAL NOTES

A. EXISTING CULTURAL RESOURCE BOUNDARIES WITHIN OR IN THE VICINITY OF THE WORK AREA ARE SHOWN ON THE DRAWINGS. IF A POTENTIAL CULTURAL RESOURCE IS ENCOUNTERED, SUSPEND ACTIVITIES IN THE IMMEDIATE AREA AND NOTIFY THE CONTRACTING OFFICER'S REPRESENTATIVE. DO NOT RESUME WORK IN THE AREA UNTIL DIRECTED. REFER TO SPECIFICATION SECTION 01 57 19 FOR ADDITIONAL INFORMATION.
B. SEE TS601 FOR OSP RISER DIAGRAM.
C. SEE CIVIL DRAWINGS FOR EXISTING CONDITIONS AND SITE CONSTRUCTION DETAILS.
D. PROVIDE NON-ENCASED DUCT BANKS UNDER BASE BID. PROVIDE CONCRETE ENCASED DUCT BANKS UNDER BID OPTION.
E. REFERENCE CIVIL SHEETS CV105 - CV116 FOR UTILITIES AND SITE TOPOGRAPHY.
F. PERFORM ALL OFF-SITE TELECOMMUNICATIONS WORK AT THE BEGINNING OF THE PROJECT. COORDINATE THIS WORK WITH THE CONTRACTING OFFICER AND P171 PROJECT.

NOTES

1 CONDUITS IN DUCT BANK SECTION ARE GALVANIZED RIGID STEEL (GRS). BOND CONDUIT TO SECONDARY GROUND GIRDLE WHERE CONDUIT CROSSES THE PRIMARY AND SECONDARY GROUND GIRDLES. SEE EQ100 FOR PRIMARY AND SECONDARY GROUND GIRDLE LOCATIONS. GROUND CONDUCTOR SIZE IS 2/0 COPPER AND IS EXOTHERMIC WELDED TO CONDUIT AND TO THE GROUND GIRDLE.
2 LOCATION OF TR 112.
3 TO TR 112. SEE C3/TT401 FOR CONTINUATION.
4 PROVIDE (1) 4" CONDUIT FROM AERIAL SPLICE ENCLOSURE TO HANDHOLE HH-112.
5 4" DIRECT BURIED CONDUIT. BURY AT 24" BFG, MINIMUM WITH WARNING TAPE AT 18" BFG. STUB CONDUIT UP IN CHARGING STATION AND IN TR112.
6 DUCT BANK ROUTE SHALL DROP A MINIMUM OF TWO FEET BELOW THE LOWEST POINT OF THE DITCH AND RISE BACK UP TO A MINIMUM TWO FEET BELOW THE FINISHED GRADE.
7 REPLACE EXISTING PEDESTAL WITH LARGER SIZE PEDESTAL TO ACCOMMODATE THE ADDITION OF THE CABLE SPLICES/SPLICE ENCLOSURE AT THIS LOCATION.
8 EXISTING COMMUNICATION SYSTEM ANTENNA TO REMAIN.
9 PROVIDE 1" CONDUIT TO GATE CONTROLLER FOR ACCESS CONTROL WIRING.

KEY PLAN

TRUE NORTH

GRAPHIC SCALE(S)

1" = 40' 0 20' 40' 80' 160'

SYM	DESCRIPTION	DATE	APPR

NAVFAC

REGISTERED COMMUNICATIONS DISTRIBUTION DESIGNER
Bicsi
DONALD R SELLERS
REG. NO. 110645
EXPIRES 12-31-2025
RCDD
SEAL

BAMFORTH ENGINEERS + SURVEYORS

A/E INFO

APPROVED
James E. Gordon, II, P.E.
FOR COMMANDER NAVFAC 4/22/2026

ACTIVITY
APPROVED BY
LCDR VINCE DEL GRECO, FEAD
PWD YORKTOWN, VA, VIA EMAIL
SATISFACTORY TO DATE 06/12/2025

DES	MES	DRW MES	CHK DRS
PM/DM	RY / KJY		
BRANCH MANAGER	WRB		
CHIEF ENG/ARCH	JWJ		
FIRE PROTECTION	HPN		

DEPARTMENT OF THE NAVY
NAVAL FACILITIES ENGINEERING SYSTEMS COMMAND
MIDLANT DC CORE
NAVAL FACILITIES ENGINEERING SYSTEMS COMMAND - MID-ATLANTIC
NORFOLK, VA
NAVAL WEAPONS STATION
YORKTOWN, VIRGINIA
P-1419 CONVENTIONAL PROMPT STRIKE (CPS)
WEAPONS TEST FACILITY
TELECOMMUNICATIONS SITE PLAN - AREA 8

SCALE: AS NOTED
EPROJECT NO.: 1783999
CONSTR. CONTR. NO.
NAVFAC DRAWING NO. 12931119
SHEET 365 OF 427
TS118

DRAWFORM REVISION: 14 SEPTEMBER 2023

7/30/2025 1:56:37 PM TS118
Autodesk Docs://23189100 - P-1419 CPS WT Facility/BLDG-P1419-1783999-T_v24.rvt

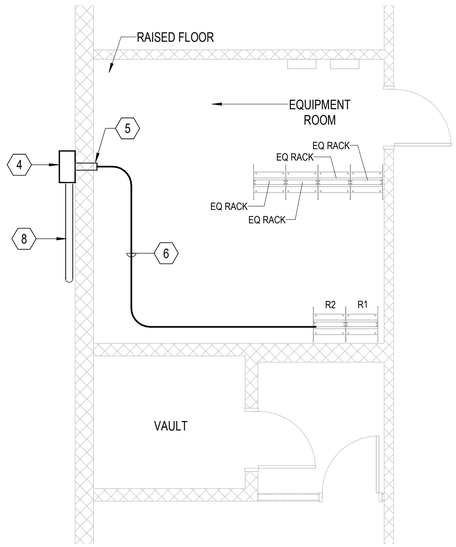

C1 BUILDING 702

SCALE: 1/4" = 1'-0" (TS111)

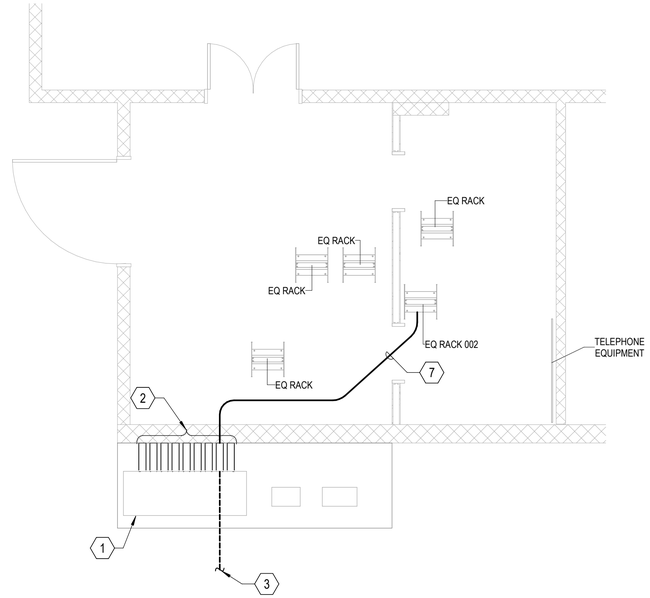

C2 BUILDING 703

SCALE: 1/4" = 1'-0" (TS111)

GENERAL NOTES

NOTES

1. EXISTING TURTLE SHELL ENCLOSURE WITH CONDUITS FROM EXISTING DUCT BANK AND CONDUITS PENETRATING BUILDING 703. SEE C1/TS505 FOR REFERENCE.
2. (9) 4" CONDUIT PENETRATIONS FROM TURTLE SHELL ENCLOSURE TO BUILDING 703.
3. ROUTE 96 STRAND INDOOR/OUTDOOR RATED FIBER OPTIC CABLE FROM INSIDE BUILDING THROUGH TURTLE SHELL ENCLOSURE TO EXISTING MANHOLE IN 4" 3-CELL FABRIC MESH INNERDUCT. SEE A1/TS602 FOR ADDITIONAL INFORMATION.
4. WALL MOUNTED PULL BOX ON EXTERIOR OF BUILDING. SEE A2/TS505 FOR REFERENCE.
5. 4" CONDUIT PENETRATION THROUGH EXTERIOR WALL.
6. 96 STRAND INDOOR/OUTDOOR RATED FIBER OPTIC CABLE IN 1" CORRUGATED INNERDUCT. ROUTE FROM 4" CONDUIT WALL PENETRATION FROM EXTERIOR WALL MOUNTED PULL BOX TO EXISTING EQUIPMENT RACK R2. SEE RISER DIAGRAM A1/TS602 FOR ADDITIONAL INFORMATION.
7. 96 STRAND INDOOR/OUTDOOR RATED FIBER OPTIC CABLE IN 1" CORRUGATED INNERDUCT. ROUTE FROM 4" CONDUIT WALL PENETRATION FROM TURTLE SHELL ENCLOSURE TO EXISTING EQUIPMENT RACK 002. SEE RISER DIAGRAM A1/TS602 FOR ADDITIONAL INFORMATION.
8. (2) 4" RGS CONDUITS WALL MOUNTED TO EXISTING BUILDING 702. SEE A2/TS505 FOR ROUTING ON FACE OF WALL.

TRUE NORTH PLAN NORTH

GRAPHIC SCALE(S)

1/4" = 1' - 0" 0 1' 5' 10' 15'

SYM	DESCRIPTION	DATE	APPR

NAVFAC

REGISTERED COMMUNICATIONS DISTRIBUTION DESIGNER
Bicsi
5 June 2025
DONALD R SELLERS
REG. NO. 110645
EXPIRES 12-31-2025
RCDD
SEAL

BAMFORTH ENGINEERS + SURVEYORS

A/E INFO

APPROVED
James E. Donahue, R.A.
FOR COMMANDER NAVFAC 4/28/2026

ACTIVITY
APPROVED BY
LCDR VINCE DEL GRECO, FEAD
PWD YORKTOWN, VA, VIA EMAIL

SATISFACTORY TO DATE 06/12/2025

DES MES	DRW MES	CHK DRS	
PMDM			RY / KJY
BRANCH MANAGER			WRB
CHIEF ENG/ARCH			JWJ
FIRE PROTECTION			HPN

DEPARTMENT OF THE NAVY
NAVAL FACILITIES ENGINEERING SYSTEMS COMMAND
MIDLANT DC CORE
NAVAL FACILITIES ENGINEERING SYSTEMS COMMAND - MID-ATLANTIC
NORFOLK, VA
NAVAL WEAPONS STATION
YORKTOWN, VIRGINIA
P-1419 CONVENTIONAL PROMPT STRIKE (CPS)
WEAPONS TEST FACILITY
ENLARGED TELECOMMUNICATIONS PLANS

SCALE: AS NOTED
EPROJECT NO.: 1783999
CONSTR. CONTR. NO.
NAVFAC DRAWING NO. 12931120
SHEET 366 OF 427

TS401

DRAWFORM REVISION: 14 SEPTEMBER 2023

7/3/2025 1:56:38 PM TS401
Autodesk Docs://23189.00 - P-1419 CPS WT Facility/BLDG-P1419-1783999-T_v24.rvt

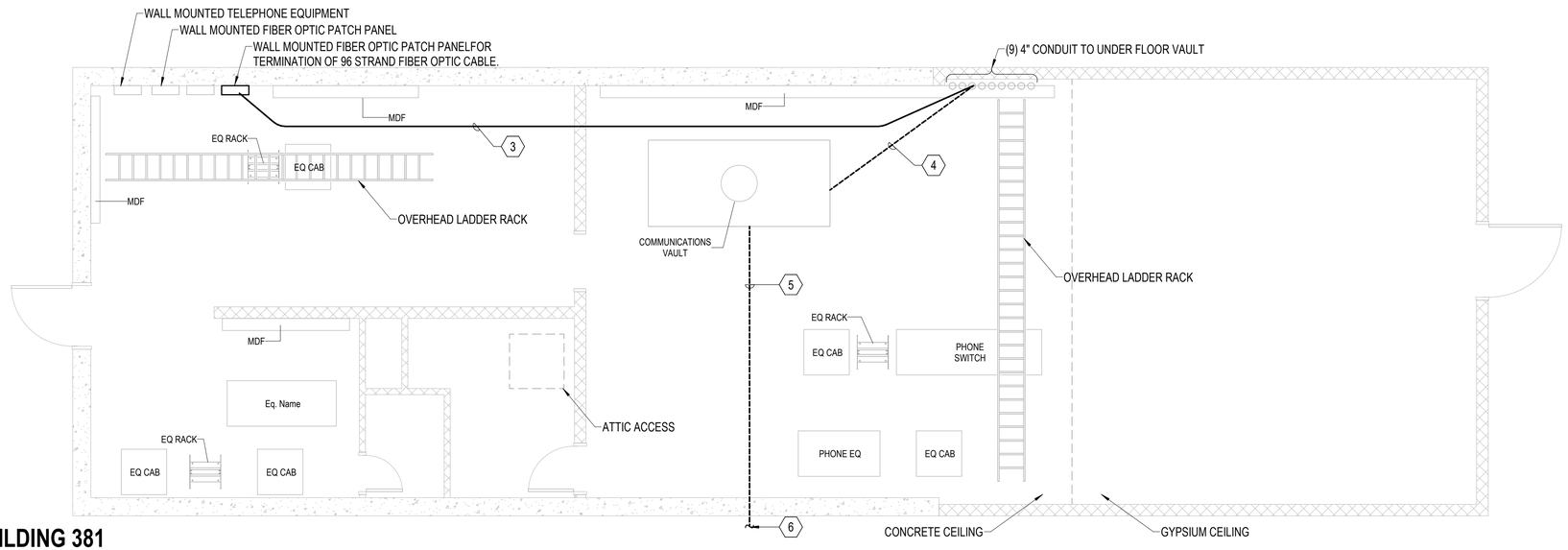

C1 BUILDING 381

SCALE: 1/4" = 1'-0"

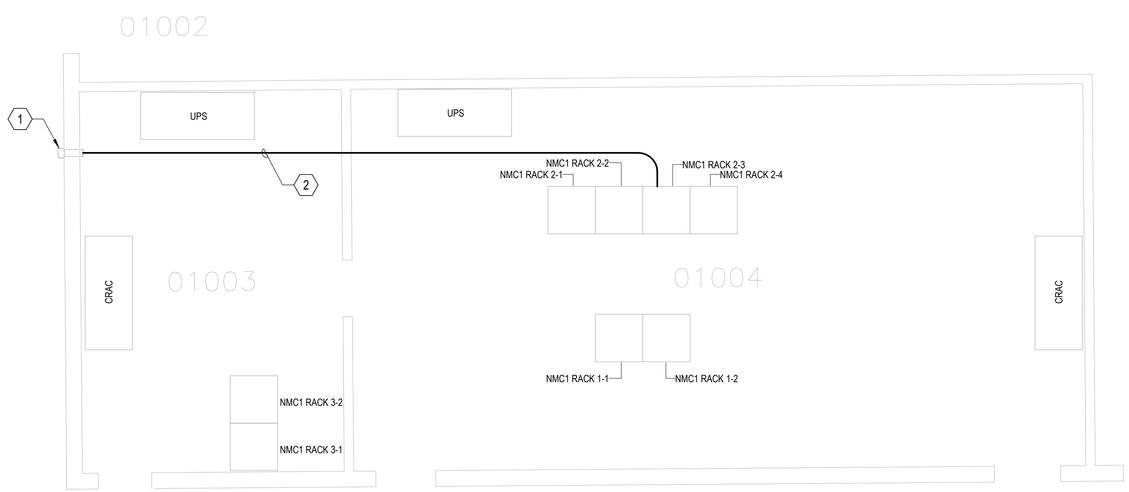

A1 BUILDING 376

SCALE: 1/4" = 1'-0"

GENERAL NOTES

SYM	DESCRIPTION	DATE	APPR

NOTES

1. EXISTING PVC LB FITTING WITH PVC 4" CONDUIT PENETRATION THROUGH THE WALL. RE-GLUE THE EXISTING FITTING TO THE EXISTING WALL PENETRATION. SEE A1/TS505 FOR REFERENCE.
2. 96 STRAND INDOOR/OUTDOOR RATED FIBER OPTIC CABLE IN 1" CORRUGATED INNERDUCT. ROUTE FROM 4" CONDUIT TO ABOVE THE EXISTING CEILING AND TO FIBER OPTIC PATCH PANEL IN EXISTING NMCI RACK 2-3. SEE RISER DIAGRAM C1/TS602 FOR ADDITIONAL INFORMATION.
3. 96 STRAND INDOOR/OUTDOOR RATED FIBER OPTIC CABLE IN 1" CORRUGATED INNERDUCT. ROUTE FROM 4" CONDUIT TO UNDER FLOOR VAULT TO ABOVE THE EXISTING ATTIC SPACE. ROUTE THROUGH ATTIC TO WALL MOUNTED FIBER OPTIC PATCH PANEL. SEE RISER DIAGRAM C1/TS602 FOR ADDITIONAL INFORMATION.
4. ROUTE 96 STRAND INDOOR/OUTDOOR RATED FIBER OPTIC CABLE TO IN-FLOOR COMMUNICATIONS VAULT IN 4" 3-CELL FABRIC MESH INNERDUCT.
5. ROUTE 96 STRAND INDOOR/OUTDOOR RATED FIBER OPTIC CABLE FROM IN-FLOOR COMMUNICATIONS VAULT TO EXISTING EXTERIOR MANHOLE IN 4" 3-CELL FABRIC MESH INNERDUCT.
6. SEE TS112 FOR CONTINUATION.

TRUE NORTH
PLAN NORTH

GRAPHIC SCALE(S)

1/4" = 1' - 0" 0 1' 5' 10' 15'

NAVFAC

REGISTERED COMMUNICATIONS DISTRIBUTION DESIGNER
Bicsi
5 June 2025
DONALD R SELLERS
REG. NO. 110645
EXPIRES 12-31-2025
RCDD
SEAL

BAMFORTH ENGINEERS + SURVEYORS

A/E INFO

APPROVED
James E. Donahue, R.A.
FOR COMMANDER NAVFAC 4/28/2026

ACTIVITY
APPROVED BY
LCDR VINCE DEL GRECO, FEAD
PWD YORKTOWN, VA, VIA EMAIL

SATISFACTORY TO DATE 06/12/2025

DES MES	DRW MES	CHK DRS	
PMDM			RY / KJY
BRANCH MANAGER			WRB
CHIEF ENG/ARCH			JWJ
FIRE PROTECTION			HPN

DEPARTMENT OF THE NAVY
NAVAL FACILITIES ENGINEERING SYSTEMS COMMAND
MIDLANT DC CORE
NAVAL FACILITIES ENGINEERING SYSTEMS COMMAND - MID-ATLANTIC
NORFOLK, VA
NAVAL WEAPONS STATION
YORKTOWN, VIRGINIA
WEAPONS TEST FACILITY
P-1419 CONVENTIONAL PROMPT STRIKE (CPS)
ENLARGED TELECOMMUNICATIONS PLANS

SCALE: AS NOTED
EPROJECT NO.: 1783999
CONSTR. CONTR. NO.
NAVFAC DRAWING NO. 12931121
SHEET 367 OF 427

TS402

DRAWFORM REVISION: 14 SEPTEMBER 2023

7/3/2025 1:56:38 PM TS402
Autodesk Docs://231889.00 - P-1419 CPS WT Facility/BLDG-P1419-1783999-T_v24.rvt

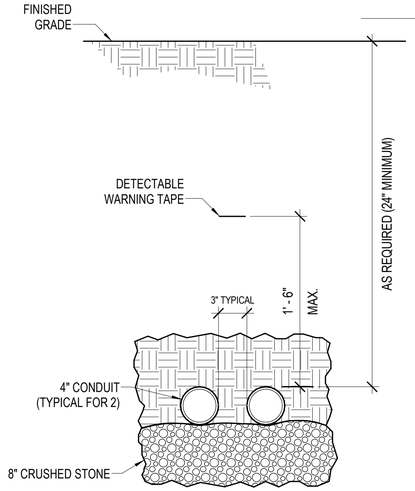

NOTES:

A. PROVIDE WARNING TAPE WITH THE WORDS "WARNING - TELECOMMUNICATIONS CABLE BELOW" AT NO MORE THAN 48" INTERVALS. PROVIDE TAPE WITH THE FOLLOWING CHARACTERISTICS:
1. MINIMUM THICKNESS OF 0.004"
2. MINIMUM STRENGTH OF 1750 PSI
3. INTEGRAL MEANS OF DETECTION BY A METAL DETECTOR
4. MADE OF MATERIALS RESISTANT TO DEGRADATION CAUSED BY SOIL CONDITIONS.

B. PROVIDE INNERDUCTS AS INDICATED ON [XX/XXXX] WITH INTEGRAL #12 TRACER WIRE. TERMINATE TRACER WIRE EITHER ON A PORT IN A MANHOLE, OR A TRACER WIRE TEST STATION. TEST TRACER WIRE TO VERIFY CONTINUITY AND PROVIDE WRITTEN REPORT TO THE CONTRACTING OFFICER LISTING ALL TRACER WIRE SPLICES WILL BE COMPRESSION TYPE.

C. PROVIDE DUCT SPACERS TO SUPPORT CONDUITS PRIOR TO CONDUIT POURING AND PROVIDE SPACERS EVERY 5 FEET ON CENTER.

D. SLOPE DUCT BANK TOWARD MANHOLES.

E. WHERE TELECOMMUNICATIONS DUCT BANKS INTERSECT OTHER UTILITIES, LOWER THE DUCT BANK AS REQUIRED WITH A MINIMUM SEPARATION FROM OTHER UTILITIES OF 18", UNLESS OTHERWISE NOTED.

C1 2-WAY TELECOMMUNICATIONS DUCT BANK, NON-CONCRETE ENCASED

SCALE: SCALE: NTS

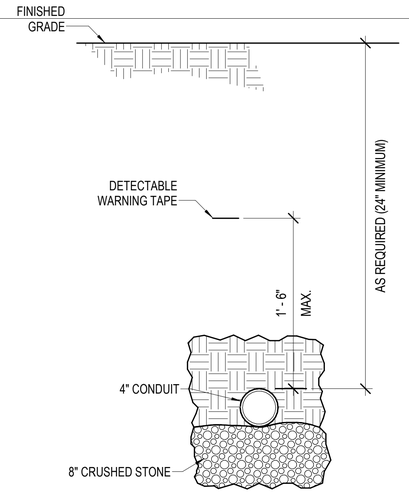

NOTES:

A. PROVIDE WARNING TAPE WITH THE WORDS "WARNING - TELECOMMUNICATIONS CABLE BELOW" AT NO MORE THAN 48" INTERVALS. PROVIDE TAPE WITH THE FOLLOWING CHARACTERISTICS:
1. MINIMUM THICKNESS OF 0.004"
2. MINIMUM STRENGTH OF 1750 PSI
3. INTEGRAL MEANS OF DETECTION BY A METAL DETECTOR
4. MADE OF MATERIALS RESISTANT TO DEGRADATION CAUSED BY SOIL CONDITIONS.

B. PROVIDE INNERDUCTS AS INDICATED ON D5/TS501 WITH INTEGRAL #12 TRACER WIRE. TERMINATE TRACER WIRE EITHER ON A PORT IN A MANHOLE, OR A TRACER WIRE TEST STATION. TEST TRACER WIRE TO VERIFY CONTINUITY AND PROVIDE WRITTEN REPORT TO THE CONTRACTING OFFICER LISTING ALL TRACER WIRE SPLICES WILL BE COMPRESSION TYPE.

C. PROVIDE DUCT SPACERS TO SUPPORT CONDUITS PRIOR TO CONDUIT POURING AND PROVIDE SPACERS EVERY 5 FEET ON CENTER.

D. SLOPE DUCT BANK TOWARD MANHOLES.

E. WHERE TELECOMMUNICATIONS DUCT BANKS INTERSECT OTHER UTILITIES, LOWER THE DUCT BANK AS REQUIRED WITH A MINIMUM SEPARATION FROM OTHER UTILITIES OF 18", UNLESS OTHERWISE NOTED.

C3 1-WAY TELECOMMUNICATIONS DUCT BANK, NON-CONCRETE ENCASED

SCALE: SCALE: NTS

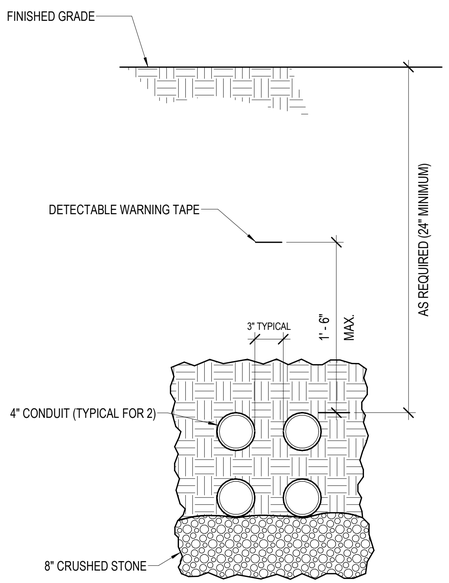

NOTES:

A. PROVIDE WARNING TAPE WITH THE WORDS "WARNING - TELECOMMUNICATIONS CABLE BELOW" AT NO MORE THAN 48" INTERVALS. PROVIDE TAPE WITH THE FOLLOWING CHARACTERISTICS:
1. MINIMUM THICKNESS OF 0.004"
2. MINIMUM STRENGTH OF 1750 PSI
3. INTEGRAL MEANS OF DETECTION BY A METAL DETECTOR
4. MADE OF MATERIALS RESISTANT TO DEGRADATION CAUSED BY SOIL CONDITIONS.

B. PROVIDE INNERDUCTS AS INDICATED ON D5/TS501 WITH INTEGRAL #12 TRACER WIRE. TERMINATE TRACER WIRE EITHER ON A PORT IN A MANHOLE, OR A TRACER WIRE TEST STATION. TEST TRACER WIRE TO VERIFY CONTINUITY AND PROVIDE WRITTEN REPORT TO THE CONTRACTING OFFICER LISTING ALL TRACER WIRE SPLICES WILL BE COMPRESSION TYPE.

C. PROVIDE DUCT SPACERS TO SUPPORT CONDUITS PRIOR TO CONDUIT POURING AND PROVIDE SPACERS EVERY 5 FEET ON CENTER.

D. SLOPE DUCT BANK TOWARD MANHOLES.

E. WHERE TELECOMMUNICATIONS DUCT BANKS INTERSECT OTHER UTILITIES, LOWER THE DUCT BANK AS REQUIRED WITH A MINIMUM SEPARATION FROM OTHER UTILITIES OF 18", UNLESS OTHERWISE NOTED.

A1 4-WAY TELECOMMUNICATIONS DUCT BANK, NON-CONCRETE ENCASED

SCALE: SCALE: NTS

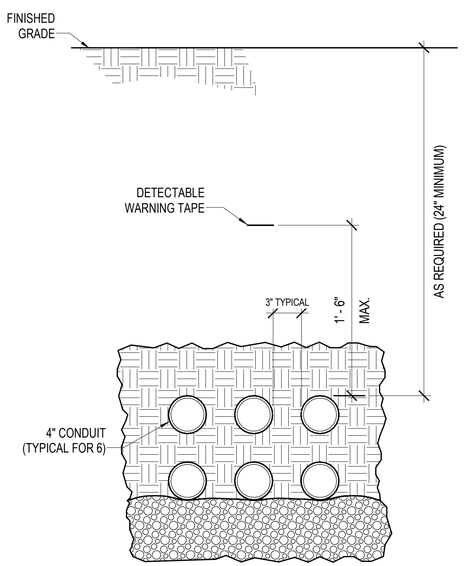

NOTES:

A. PROVIDE WARNING TAPE WITH THE WORDS "WARNING - TELECOMMUNICATIONS CABLE BELOW" AT NO MORE THAN 48" INTERVALS. PROVIDE TAPE WITH THE FOLLOWING CHARACTERISTICS:
1. MINIMUM THICKNESS OF 0.004"
2. MINIMUM STRENGTH OF 1750 PSI
3. INTEGRAL MEANS OF DETECTION BY A METAL DETECTOR
4. MADE OF MATERIALS RESISTANT TO DEGRADATION CAUSED BY SOIL CONDITIONS.

B. PROVIDE INNERDUCTS AS INDICATED ON D5/TS501WITH INTEGRAL #12 TRACER WIRE. TERMINATE TRACER WIRE EITHER ON A PORT IN A MANHOLE, OR A TRACER WIRE TEST STATION. TEST TRACER WIRE TO VERIFY CONTINUITY AND PROVIDE WRITTEN REPORT TO THE CONTRACTING OFFICER LISTING ALL TRACER WIRE SPLICES WILL BE COMPRESSION TYPE.

C. PROVIDE DUCT SPACERS TO SUPPORT CONDUITS PRIOR TO CONDUIT POURING AND PROVIDE SPACERS EVERY 5 FEET ON CENTER.

D. SLOPE DUCT BANK TOWARD MANHOLES.

E. WHERE TELECOMMUNICATIONS DUCT BANKS INTERSECT OTHER UTILITIES, LOWER THE DUCT BANK AS REQUIRED WITH A MINIMUM SEPARATION FROM OTHER UTILITIES OF 18", UNLESS OTHERWISE NOTED.

A3 6-WAY TELECOMMUNICATIONS DUCT BANK, NON-CONCRETE ENCASED

SCALE: NOT TO SCALE

SYM	DESCRIPTION	DATE	APPR

NAVFAC

REGISTERED COMMUNICATIONS DISTRIBUTION DESIGNER
Bicsi
Since 2025
DONALD R SELLERS
REG. NO. 110645
EXPIRES 12-31-2025
RCDD

BAMFORTH ENGINEERS + SURVEYORS

A/E INFO

APPROVED
James E. Grandon, R.A.
FOR COMMANDER NAVFAC 4/22/2026

ACTIVITY
APPROVED BY
LCDR VINCE DEL GRECO, FEAD
PWD YORKTOWN, VA, VIA EMAIL

SATISFACTORY TO DATE 06/12/2025

DES MES	DRW MES	CHK DRS	
PM/DM	RY / KJY		
BRANCH MANAGER	WRB		
CHIEF ENG/ARCH	JWJ		
FIRE PROTECTION	HPN		

DEPARTMENT OF THE NAVY
NAVAL FACILITIES ENGINEERING SYSTEMS COMMAND
MIDLANT DC CORE
NAVAL FACILITIES ENGINEERING SYSTEMS COMMAND - MID-ATLANTIC
NORFOLK, VA
NAVAL WEAPONS STATION
YORKTOWN, VIRGINIA
P-1419 CONVENTIONAL PROMPT STRIKE (CPS)
WEAPONS TEST FACILITY
TELECOMMUNICATIONS SITE DETAILS

SCALE: AS NOTED
EPROJECT NO.: 1783999
CONSTR. CONTR. NO.
NAVFAC DRAWING NO.
12931122
SHEET 368 OF 427

TS501

DRAWFORM REVISION: 14 SEPTEMBER 2023

7/30/2025 1:56:39 PM TS501
Autodesk Docs://23189.00 - P-1419 CPS WT Facility/BLDG-P1419-1783999-T_v24.rvt

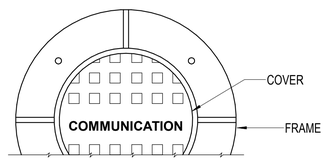

PLAN VIEW

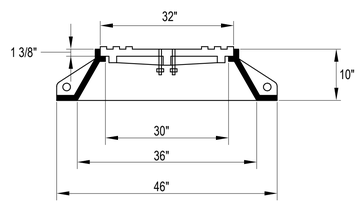

30B STANDARD FRAME AND COVER

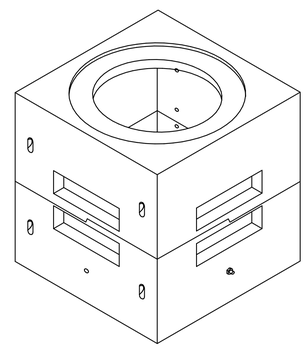

ISOMETRIC VIEW

NOTES:

1. CONCRETE: 6.500 p.s.i. @ 28 DAYS, 5% 8% ENTRAINED AIR (MIX DESIGN #9).
2. REBAR: ASTM A-706, GRADE 60, BLACK BAR.
3. DESIGN CRITERIA: ASTM C858. LOADING PER ASTM C857, 2-0 MIN. TO 5-0" MAX. EARTH COVER. AASHTO HS 20 WHEEL LOAD & APPLICABLE IMPACT. VERTICAL & LATERAL SOIL PRESSURES DETERMINED USING 120 PCF SOIL DENSITY. GROUNDWATER 3:0 BELOW GRADE. REINFORCING COVER PER ACI 318.
4. (2) 7/8" Ø STEEL, HOT-DIPPED GALVANIZED PULLING IRON, I-BOLT TYPE.
5. (8) 4Tx3.5" FORGED FOOT LIFTING ANCHORS (LA-RL-3.5-DFF).
6. UCP SUMP DEPRESSION WITH PLASTIC LID.
7. (4) BONDING RIBBON ASSEMBLIES, INCLUDING:
   (4) Ø 1/4" INSERTS WITH HEX HEAD BOLTS.
   (6') 1/16"x3/8" SOFT TINNED COPPER BONDING RIBBON.
   (4) 5/8" CABLE CLAMPS.
8. (16) Ø1/2" PLASTIC THREADED INSERTS.
9. (2 ROLLS) 1"x14.5'/roll BUTYL RUBBER JOINT SEALANT.
10. STRUCTURE IS NOT WATERTIGHT.
11. STRUCTURE TOLERANCE= ± 1/4".
12. WEIGHT: TOP SECTION: 2560#
    BOTTOM SECTION: 2,955#
    TOTAL: 5,515#

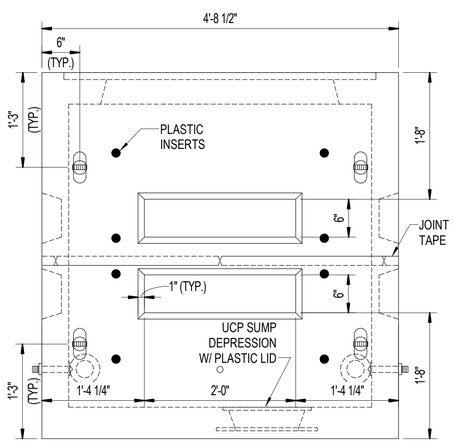

FRONT ELEVATION

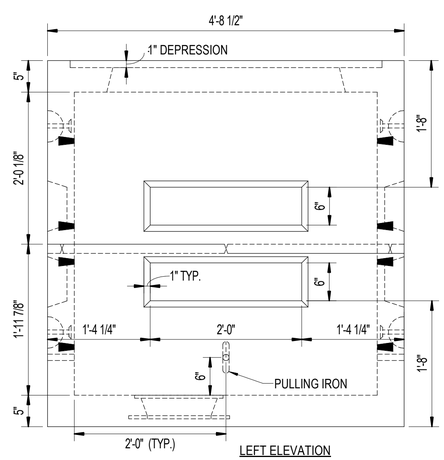

LEFT ELEVATION

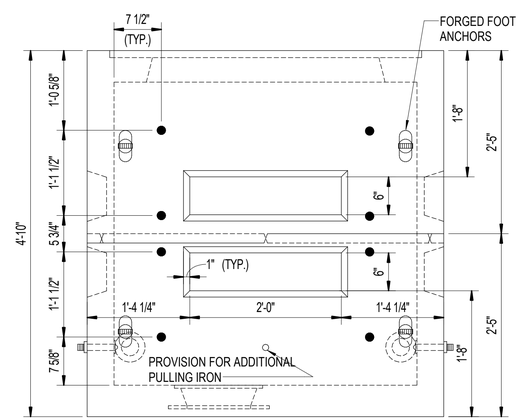

REAR ELEVATION

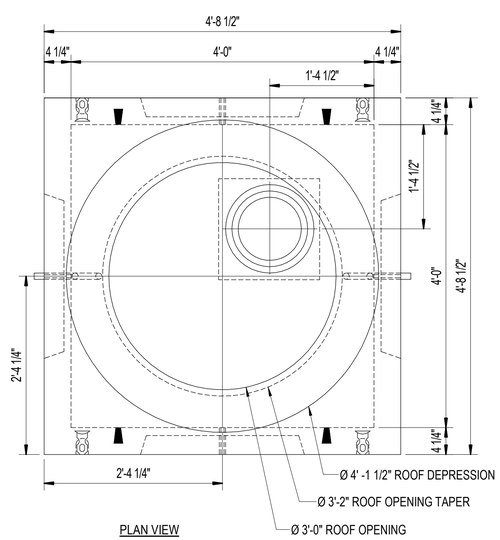

PLAN VIEW

A1 CONCRETE COMMUNICATIONS HAND HOLE

SCALE: SCALE: NTS

SYM	DESCRIPTION	DATE	APPR

NAVFAC

REGISTERED COMMUNICATIONS DISTRIBUTION DESIGNER
DONALD R SELLERS
REG. NO. 110645
EXPIRES 12-31-2025
RCDD
SEAL

BAMFORTH ENGINEERS + SURVEYORS

A/E INFO

APPROVED
FOR COMMANDER NAVFAC 4/22/2026

ACTIVITY
APPROVED BY
LCDR VINCE DEL GRECO, FEAD
PWD YORKTOWN, VA, VIA EMAIL

SATISFACTORY TO DATE 06/12/2025

DES MES	DRW MES	CHK DRS	
PMDM			RY / KJY
BRANCH MANAGER			WRB
CHIEF ENG/ARCH			JWJ
FIRE PROTECTION			HPN

DEPARTMENT OF THE NAVY
NAVAL FACILITIES ENGINEERING SYSTEMS COMMAND
MIDLANT DC CORE
NAVAL FACILITIES ENGINEERING SYSTEMS COMMAND - MID-ATLANTIC
NORFOLK, VA
NAVAL WEAPONS STATION
YORKTOWN, VIRGINIA
P-1419 CONVENTIONAL PROMPT STRIKE (CPS)
WEAPONS TEST FACILITY
TELECOMMUNICATIONS SITE DETAILS

SCALE: AS NOTED
EPROJECT NO.: 1783999
CONSTR. CONTR. NO.
NAVFAC DRAWING NO. 12931123
SHEET 369 OF 427

TS502

DRAWFORM REVISION: 14 SEPTEMBER 2023

7/30/2025 1:56:39 PM TS502
Autodesk Docs://23189100 - P-1419 CPS WT Facility/BLDG-P1419-1783999-T_v24.rvt

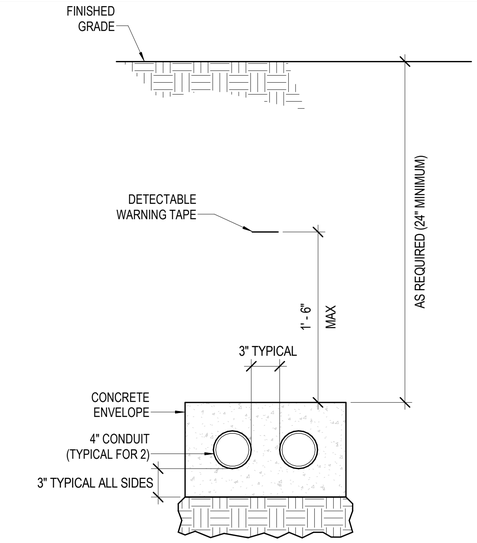

NOTES:

A. PROVIDE WARNING TAPE WITH THE WORDS "WARNING - TELECOMMUNICATIONS CABLE BELOW" AT NO MORE THAN 48" INTERVALS. PROVIDE TAPE WITH THE FOLLOWING CHARACTERISTICS:
1. MINIMUM THICKNESS OF 0.004"
2. MINIMUM STRENGTH OF 1750 PSI
3. INTEGRAL MEANS OF DETECTION BY A METAL DETECTOR
4. MADE OF MATERIALS RESISTANT TO DEGRADATION CAUSED BY SOIL CONDITIONS.

B. PROVIDE INNERDUCTS AS INDICATED ON [XX/XXXX] WITH INTEGRAL #12 TRACER WIRE. TERMINATE TRACER WIRE EITHER ON A PORT IN A MANHOLE, OR A TRACER WIRE TEST STATION. TEST TRACER WIRE TO VERIFY CONTINUITY AND PROVIDE WRITTEN REPORT TO THE CONTRACTING OFFICER LISTING ALL TRACER WIRE SPLICES WILL BE COMPRESSION TYPE.

C. PROVIDE DUCT SPACERS TO SUPPORT CONDUITS PRIOR TO CONDUIT POURING AND PROVIDE SPACERS EVERY 5 FEET ON CENTER.

D. SLOPE DUCT BANK TOWARD MANHOLES.

E. WHERE TELECOMMUNICATIONS DUCT BANKS INTERSECT OTHER UTILITIES, LOWER THE DUCT BANK AS REQUIRED WITH A MINIMUM SEPARATION FROM OTHER UTILITIES OF 18", UNLESS OTHERWISE NOTED.

C1 2-WAY TELECOMMUNICATIONS DUCT BANK

SCALE: SCALE: NTS

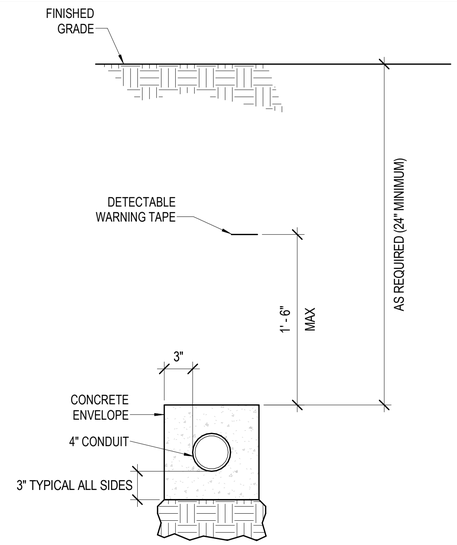

NOTES:

A. PROVIDE WARNING TAPE WITH THE WORDS "WARNING - TELECOMMUNICATIONS CABLE BELOW" AT NO MORE THAN 48" INTERVALS. PROVIDE TAPE WITH THE FOLLOWING CHARACTERISTICS:
1. MINIMUM THICKNESS OF 0.004"
2. MINIMUM STRENGTH OF 1750 PSI
3. INTEGRAL MEANS OF DETECTION BY A METAL DETECTOR
4. MADE OF MATERIALS RESISTANT TO DEGRADATION CAUSED BY SOIL CONDITIONS.

B. PROVIDE INNERDUCTS AS INDICATED ON D5/TS501 WITH INTEGRAL #12 TRACER WIRE. TERMINATE TRACER WIRE EITHER ON A PORT IN A MANHOLE, OR A TRACER WIRE TEST STATION. TEST TRACER WIRE TO VERIFY CONTINUITY AND PROVIDE WRITTEN REPORT TO THE CONTRACTING OFFICER LISTING ALL TRACER WIRE SPLICES WILL BE COMPRESSION TYPE.

C. PROVIDE DUCT SPACERS TO SUPPORT CONDUITS PRIOR TO CONDUIT POURING AND PROVIDE SPACERS EVERY 5 FEET ON CENTER.

D. SLOPE DUCT BANK TOWARD MANHOLES.

E. WHERE TELECOMMUNICATIONS DUCT BANKS INTERSECT OTHER UTILITIES, LOWER THE DUCT BANK AS REQUIRED WITH A MINIMUM SEPARATION FROM OTHER UTILITIES OF 18", UNLESS OTHERWISE NOTED.

C3 1-WAY TELECOMMUNICATIONS DUCT BANK, CONCRETE ENCASED

SCALE: SCALE: NTS

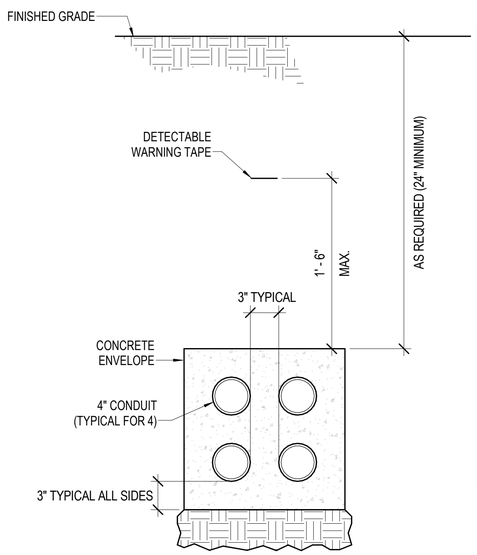

NOTES:

A. PROVIDE WARNING TAPE WITH THE WORDS "WARNING - TELECOMMUNICATIONS CABLE BELOW" AT NO MORE THAN 48" INTERVALS. PROVIDE TAPE WITH THE FOLLOWING CHARACTERISTICS:
1. MINIMUM THICKNESS OF 0.004"
2. MINIMUM STRENGTH OF 1750 PSI
3. INTEGRAL MEANS OF DETECTION BY A METAL DETECTOR
4. MADE OF MATERIALS RESISTANT TO DEGRADATION CAUSED BY SOIL CONDITIONS.

B. PROVIDE INNERDUCTS AS INDICATED ON D5/TS501 WITH INTEGRAL #12 TRACER WIRE. TERMINATE TRACER WIRE EITHER ON A PORT IN A MANHOLE, OR A TRACER WIRE TEST STATION. TEST TRACER WIRE TO VERIFY CONTINUITY AND PROVIDE WRITTEN REPORT TO THE CONTRACTING OFFICER LISTING ALL TRACER WIRE SPLICES WILL BE COMPRESSION TYPE.

C. PROVIDE DUCT SPACERS TO SUPPORT CONDUITS PRIOR TO CONDUIT POURING AND PROVIDE SPACERS EVERY 5 FEET ON CENTER.

D. SLOPE DUCT BANK TOWARD MANHOLES.

E. WHERE TELECOMMUNICATIONS DUCT BANKS INTERSECT OTHER UTILITIES, LOWER THE DUCT BANK AS REQUIRED WITH A MINIMUM SEPARATION FROM OTHER UTILITIES OF 18", UNLESS OTHERWISE NOTED.

A1 4-WAY TELECOMMUNICATIONS DUCT BANK

SCALE: SCALE: NTS

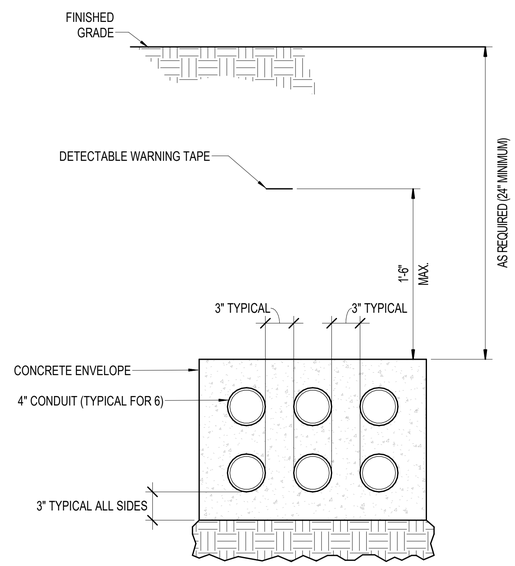

NOTES:

A. PROVIDE WARNING TAPE WITH THE WORDS "WARNING - TELECOMMUNICATIONS CABLE BELOW" AT NO MORE THAN 48" INTERVALS. PROVIDE TAPE WITH THE FOLLOWING CHARACTERISTICS:
1. MINIMUM THICKNESS OF 0.004"
2. MINIMUM STRENGTH OF 1750 PSI
3. INTEGRAL MEANS OF DETECTION BY A METAL DETECTOR
4. MADE OF MATERIALS RESISTANT TO DEGRADATION CAUSED BY SOIL CONDITIONS.

B. PROVIDE INNERDUCTS AS INDICATED ON D5/TS501WITH INTEGRAL #12 TRACER WIRE. TERMINATE TRACER WIRE EITHER ON A PORT IN A MANHOLE, OR A TRACER WIRE TEST STATION. TEST TRACER WIRE TO VERIFY CONTINUITY AND PROVIDE WRITTEN REPORT TO THE CONTRACTING OFFICER LISTING ALL TRACER WIRE SPLICES WILL BE COMPRESSION TYPE.

C. PROVIDE DUCT SPACERS TO SUPPORT CONDUITS PRIOR TO CONDUIT POURING AND PROVIDE SPACERS EVERY 5 FEET ON CENTER.

D. SLOPE DUCT BANK TOWARD MANHOLES.

E. WHERE TELECOMMUNICATIONS DUCT BANKS INTERSECT OTHER UTILITIES, LOWER THE DUCT BANK AS REQUIRED WITH A MINIMUM SEPARATION FROM OTHER UTILITIES OF 18", UNLESS OTHERWISE NOTED.

A3 6-WAY TELECOMMUNICATIONS DUCT BANK, CONCRETE ENCASED

SCALE: NOT TO SCALE

ALL DETAILS ON THIS SHEET ARE BID OPTION

SYM	DESCRIPTION	DATE	APPR

NAVFAC

REGISTERED COMMUNICATIONS DISTRIBUTION DESIGNER
Bicsi
Donald R. Sellers 14 Nov 2025
DONALD R SELLERS
REG. NO. 110645
EXPIRES 12-31-2025
RCDD
SEAL

BAMFORTH ENGINEERS + SURVEYORS

A/E INFO

APPROVED
NAVFAC CONTRACTING OFFICER
FOR COMMANDER NAVFAC 11/28/2025

ACTIVITY
APPROVED BY
LCDR VINCE DEL GRECO, FEAD
PWD YORKTOWN, VA, VIA EMAIL
SATISFACTORY TO DATE 06/12/2025

DES MES	DRW MES	CHK DRS	
PM/DM			RY / KJY
BRANCH MANAGER			WRB
CHIEF ENG/ARCH			JWJ
FIRE PROTECTION			HPN

DEPARTMENT OF THE NAVY
NAVAL FACILITIES ENGINEERING SYSTEMS COMMAND
MIDLANT DC CORE
NAVAL FACILITIES ENGINEERING SYSTEMS COMMAND - MID-ATLANTIC
NORFOLK, VA
NAVAL WEAPONS STATION
YORKTOWN, VIRGINIA
P-1419 CONVENTIONAL PROMPT STRIKE (CPS)
WEAPONS TEST FACILITY
TELECOMMUNICATIONS SITE DETAILS

SCALE: AS NOTED
EPROJECT NO.: 1783999
CONSTR. CONTR. NO.
NAVFAC DRAWING NO.
12931124
SHEET 370 OF 427
TS503
DRAW/FORM REVISION: 14 SEPTEMBER 2023

7/3/2025 1:56:40 PM TS503
Autodesk Docs://23189.00 - P-1419 CPS WT Facility/BLDG-P1419-1783999-T_v24.rvt

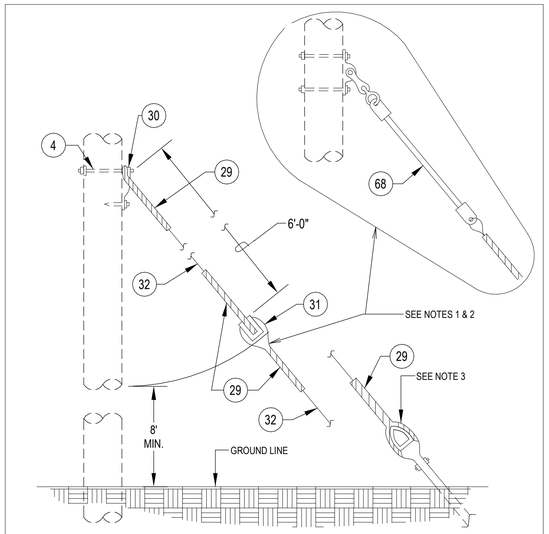

NOTES

1. DRAWING REPRESENTS SYMBOL FOR "GUY-I". OMIT ITEM (31) FOR THE "GUY" SYMBOL.
2. ON CIRCUIT OPERATING VOLTAGES GREATER THAN 15KV, SUBSTITUTE (68) FOR (31).
3. COORDINATE INSTALLATION WITH ANCHOR AS SPECIFIED.
4. UTILIZE ITEM (68) WHEN GUYING ATTACHMENT IS LOCATED IN THE PRIMARY AREA OF THE POLE AS INDICATED BY SPECIFIC DESIGN REQUIREMENTS PROVIDED.
5. BOND ALL GUYS (SUPPLY & COMMUNICATION) AND CONNECT TO POLE GROUND AND SYSTEM NEUTRAL (IF EXISTING).

GUY-I
GUY

SKETCH DATE JUNE 2002 | STYLE OH-32

POLE LINE MATERIAL LIST

(1) FLAT STEEL BRACE (TWO PIECES)
(2) MACHINE BOLT, 3/8" X LENGTH NEEDED WITH WASHER, NUT AND LOCKWASHER
(3) 8' WOOD CROSSARM WITH CROSS SECTION DIMENSIONS OF 3 1/2" X 4 1/2"
(4) MACHINE BOLT, 5/8" X LENGTH NEEDED WITH WASHER, NUT AND LOCKWASHER
(5) TIMBER CONNECTOR
(6) LAG SCREW, 1/2" X 4"
(7) ANGLE STEEL BRACE (TWO PIECES)
(8) MACHINE BOLT, 1/2" X LENGTH NEEDED, WITH WASHER, NUT & LOCKWASHER
(9) DEAD END BOX
(10) STEEL PIN
(11) PIN INSULATOR
(12) GRID GAIN, USED ONLY WHEN THERE IS NO POLE GAIN
(13) ANGLE STEEL BRACE (ONE PIECE)
(14) 10' WOOD CROSSARM WITH CROSS SECTION DIMENSIONS OF 3 1/2" X 4 1/2"
(15) 5/8" EYE NUT
(16) 5/8" EYE BOLT, LENGTH AS NEEDED, WITH WASHER, NUT & LOCKWASHER
(17) EXTENSION LINK
(18) BELL TYPE SUSPENSION INSULATOR WITH CONNECTING HARDWARE
(19) STRAIN CLAMP
(20) STEEL ANGLE PIN
(21) CLUSTER MOUNTING BRACKET, STEEL
(22) TRANSFORMER GROUNDING CONNECTION
(23) STIRRUP
(24) SECONDARY LEAD SUPPORT BRACKET
(25) ADAPTER PLATE FOR CLUSTER MOUNTING
(26) CLEVIS BRACKET FOR SPOOL INSULATOR
(27) SPOOL INSULATOR
(28) U BOLT CLAMP
(29) PREFORMED GUY GRIP
(30) GUY HOOK
(31) GUY STRAIN INSULATOR
(32) GUY WIRE, SIZE AS SPECIFIED
(33) #4 WP CU. SOFT DRAWN GROUND WIRE
(34) GROUND CLAMP
(35) CONDUIT COUPLING
(36) CONDUIT BEND
(37) INSULATED BUSHING
(38) PERFORATED STRAPPING, 1-1/2" WIDE
(39) HOT LINE CLAMP
(40) FUSED CUTOUT, AS SPECIFIED
(41) SURGE ARRESTER, AS SPECIFIED
(42) POLE TOP PIN (RIDGE PIN) - 24 INCHES LONG
(43) CROSSARM ANGLE PIN
(44) ANGLE POLE TOP PIN
(45) WEATHERPROOF SOFT DRAWN WIRE-SIZE
(a) T0 MATCH OR EXCEED AMPACITY OF CONNECTING CABLE, OR
(b) AT 125% OF TRANSFORMER FULL LOAD CURRENT, BUT NOT LESS THAN NO. 4 AWG

POLE LINE MATERIAL LIST

SKETCH DATE JUNE 2002 | STYLE OH-1.5

POLE LINE MATERIAL LIST

(46) TRI-MOUNT BRACKET
(47) TERMINATOR
(48) MOUNTING BRACKET
(49) CABLE GRIP HANGER
(50) HOSE CLAMP
(51) STUD, 3/4" X 1-3/4"
(52) LINE POST INSULATOR
(53) TRIPLE INSULATOR BRACKET
(54) ANGLE CLAMP
(55) INSULATOR, LINE POST CLAMP
(56) 4' CROSSARM
(57) CROSSARM GAIN BRACKET
(58) PULLEY BRACKET
(59) WEDGE CLAMP
(60) MIDSPAN SERVICE CLAMP
(61) STUD, 7"
(62) SADDLE, ANGLE
(63) SADDLE CROSSARM
(64) FITTING, POLE TOP
(65) CONNECTOR
(66) SUSPENSION CLAMP
(67) TIE, SERVICE CABLE
(68) 54" FIBERGLASS STRAIN INSULATOR
(69) PVC RISER SHIELD
(70) PVC EXTENSION SHIELD
(71) PVC BACK PLATE
(72) 8' WOOD CROSSARM WITH CROSS SECTION DIMENSIONS OF 4 3/4" X 5 3/4"
(73) 10' WOOD CROSSARM WITH CROSS SECTION DIMENSIONS OF 4 3/4" X 5 3/4"
(74) BACK-UP CURRENT LIMITING FUSE

POLE LINE MATERIAL LIST

SKETCH DATE JUNE 2002 | STYLE OH-1.5A

(A1) TYPICAL POLE GUY ANCHOR DETAIL

SCALE: NTS

SYM	DESCRIPTION	DATE	APPR

NAVFAC

REGISTERED COMMUNICATIONS DISTRIBUTION DESIGNER
Bicsi
DONALD R SELLERS
REG. NO. 110645
EXPIRES 12-31-2025
RCDD
SEAL

BAMFORTH
ENGINEERS + SURVEYORS

A/E INFO

APPROVED
James E. Gaddis, R.A.
FOR COMMANDER NAVFAC 4/22/2026

ACTIVITY
APPROVED BY
LCDR VINCE DEL GRECO, FEAD
PWD YORKTOWN, VA. VIA EMAIL

SATISFACTORY TO DATE 06/12/2025

DES MES	DRW MES	CHK DRS	
PM/DM			RY / KJY
BRANCH MANAGER			WRB
CHIEF ENG/ARCH			JWJ
FIRE PROTECTION			HPN

DEPARTMENT OF THE NAVY
NAVAL FACILITIES ENGINEERING SYSTEMS COMMAND
MIDLANT DIC CORE
NAVAL FACILITIES ENGINEERING SYSTEMS COMMAND - MID-ATLANTIC
NORFOLK, VA.
NAVAL WEAPONS STATION
YORKTOWN, VIRGINIA
P-1419 CONVENTIONAL PROMPT STRIKE (CPS)
WEAPONS TEST FACILITY
TELECOMMUNICATIONS SITE DETAILS

SCALE: AS NOTED
EPROJECT NO.: 1783999
CONSTR. CONTR. NO.
NAVFAC DRAWING NO. 12931125
SHEET 371 OF 427
TS504
DRAWFORM REVISION: 14 SEPTEMBER 2023

7/3/2025 1:56:40 PM TS504
Autodesk Docs://23189.00 - P-1419 CPS WT Facility/BLDG-P1419-1783999-T_v24.rvt

C1 EXISTING TURTLE SHELL ENCLOSURE

SCALE: NTS

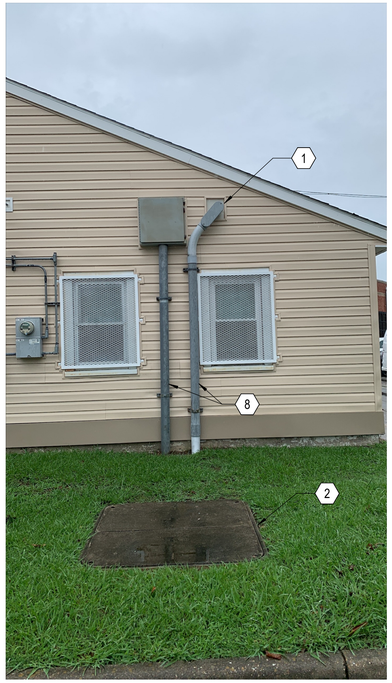

A1 BLDG 376 EXTERIOR EXISTING CONDUIT PENETRATION

SCALE: NTS

A2 BLDG 702 EXTERIOR CONDUIT PENETRATION

SCALE: NTS

GENERAL NOTES

NOTES

1 EXISTING PVC LB FITTING WITH PVC 4" CONDUIT PENETRATION THROUGH THE WALL. RE-GLUE THE EXISTING FITTING TO THE EXISTING WALL PENETRATION.
2 EXISTING HAND HOLE HH-1
3 PULL BOX WITH FULL HINGED LOCKING COVER. SIZE AS REQUIRED.
4 (2) 4" RGS CONDUITS FROM HANDHOLE HH-702.
5 EXISTING TURTLE SHELL ENCLOSURE.
6 EXISTING TYPICAL 4" CONDUIT FROM EXISTING MANHOLE.
7 EXISTING TYPICAL 4" CONDUIT PENETRATION TO BUILDING 703.
8 EXISTING 4" CONDUIT FROM EXISTING HANDHOLE HH-1

SYM	DESCRIPTION	DATE	APPR

NAVFAC

REGISTERED COMMUNICATIONS DISTRIBUTION DESIGNER
Biggi
Donald R. Sellers
3 Jun 2025
DONALD R SELLERS
REG. NO. 110645
EXPIRES 12-31-2025
RCDD
SEAL

BAMFORTH ENGINEERS + SURVEYORS

AE INFO

APPROVED
James E. Donahue, R.A.
FOR COMMANDER NAVFAC 4/22/2026

ACTIVITY:
APPROVED BY
LCDR VINCE DEL GRECO, FEAD
PWD YORKTOWN, VA, VIA EMAIL
SATISFACTORY TO DATE 06/12/2025

DES MES	DRW MES	CHK DRS	
PM/DM	RY / KJY		
BRANCH MANAGER	WRB		
CHIEF ENG/ARCH	JWJ		
FIRE PROTECTION	HPN		

DEPARTMENT OF THE NAVY
NAVAL FACILITIES ENGINEERING SYSTEMS COMMAND
MIDLANT DC CORE
NAVAL FACILITIES ENGINEERING SYSTEMS COMMAND - MID-ATLANTIC
NORFOLK, VA
NAVAL WEAPONS STATION
YORKTOWN, VIRGINIA
P-1419 CONVENTIONAL PROMPT STRIKE (CPS)
WEAPONS TEST FACILITY
TELECOMMUNICATIONS DETAILS

SCALE: AS NOTED
EPROJECT NO.: 1783999
CONSTR. CONTR. NO.
NAVFAC DRAWING NO.
12931126
SHEET 372 OF 427
TS505

DRAWFORM REVISION: 14 SEPTEMBER 2023

TS505
7/3/2025 1:56:41 PM
Autodesk Docs://23189.00 - P-1419 CPS WT Facility/BLDG-P1419-1783999-T_v24.rvt

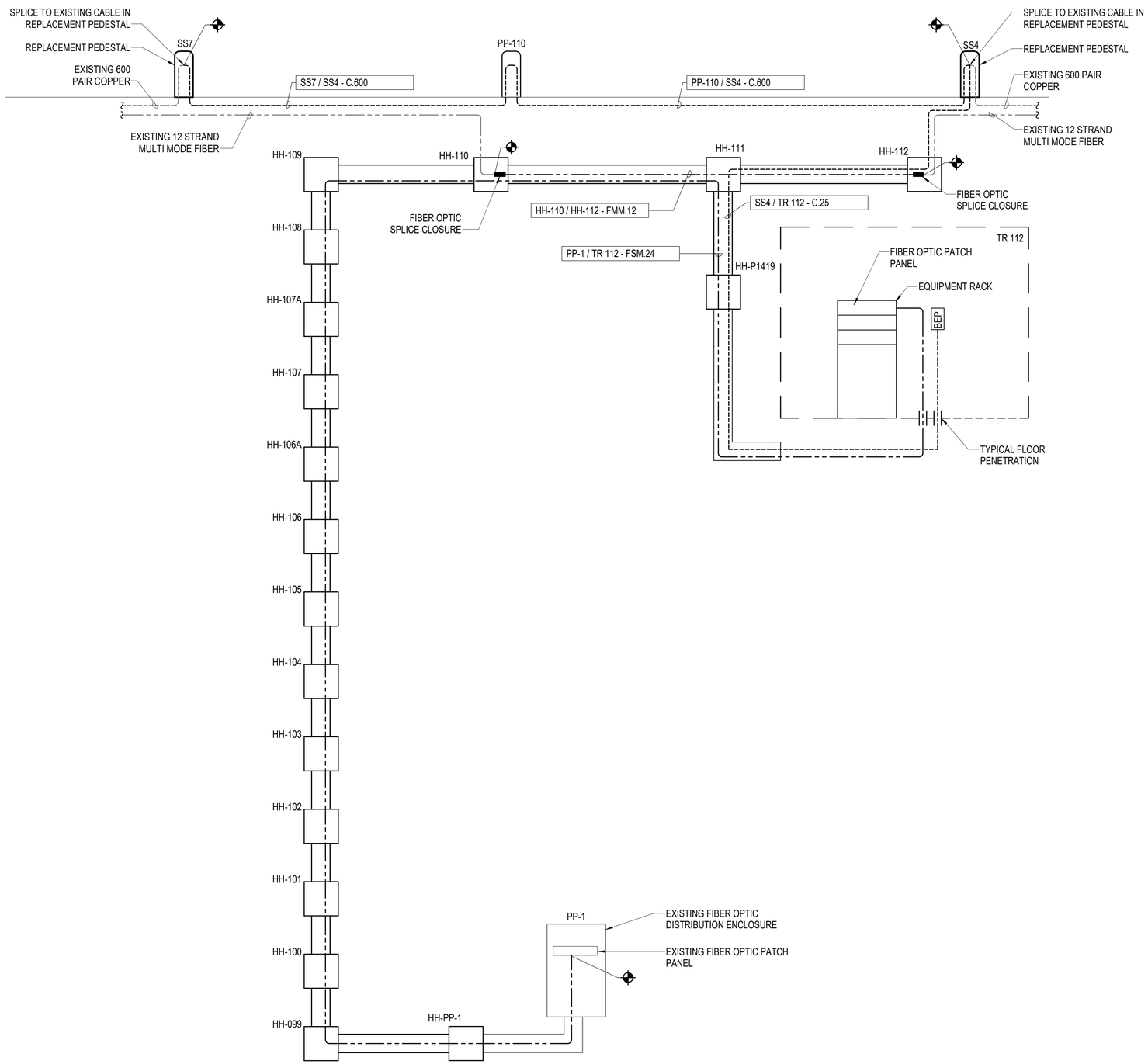

A1 OSP RISER DIAGRAM MAIN BUILDING SITE

SCALE: NTS

GENERAL NOTES

A. PROVIDE 30 DAY NOTICE TO CONTRACTING OFFICER PRIOR TO ANY CABLE SPLICE.
B. COORDINATE WITH NCTAMS BEFORE SPLICING OF TELECOMMUNICATIONS CABLING.

SYM	DESCRIPTION	DATE	APPR

NAVFAC

REGISTERED COMMUNICATIONS DISTRIBUTION DESIGNER
Biggi
Sept 2025
DONALD R SELLERS
REG. NO. 110645
EXPIRES 12-31-2025
RCDD
SEAL

BAMFORTH ENGINEERS + SURVEYORS

A/E INFO

APPROVED
James E. Donahue, R.A.
FOR COMMANDER NAVFAC 4/28/2026

ACTIVITY
APPROVED BY
LCDR VINCE DEL GRECO, FEAD
PWD YORKTOWN, VA, VIA EMAIL
SATISFACTORY TO DATE 06/12/2025

DES MES	DRW MES	CHK DRS	
PM/DM			RY / KJY
BRANCH MANAGER			WRB
CHIEF ENG/ARCH			JWJ
FIRE PROTECTION			HPN

DEPARTMENT OF THE NAVY
NAVAL FACILITIES ENGINEERING SYSTEMS COMMAND
MIDLANT DC CORE
NAVAL FACILITIES ENGINEERING SYSTEMS COMMAND - MID-ATLANTIC
NORFOLK, VA
NAVAL WEAPONS STATION
YORKTOWN, VIRGINIA
P-1419 CONVENTIONAL PROMPT STRIKE (CPS)
WEAPONS TEST FACILITY
OSP RISER DIAGRAM

SCALE: AS NOTED
EPROJECT NO.: 1783999
CONSTR. CONTR. NO.
NAVFAC DRAWING NO.
12931127
SHEET 373 OF 427
TS601

DRAWFORM REVISION: 14 SEPTEMBER 2023

7/3/2025 1:58:41 PM TS601
Autodesk Docs://23189.00 - P-1419 CPS WT Facility/BLDG-P1419-1783999-T_v24.rvt

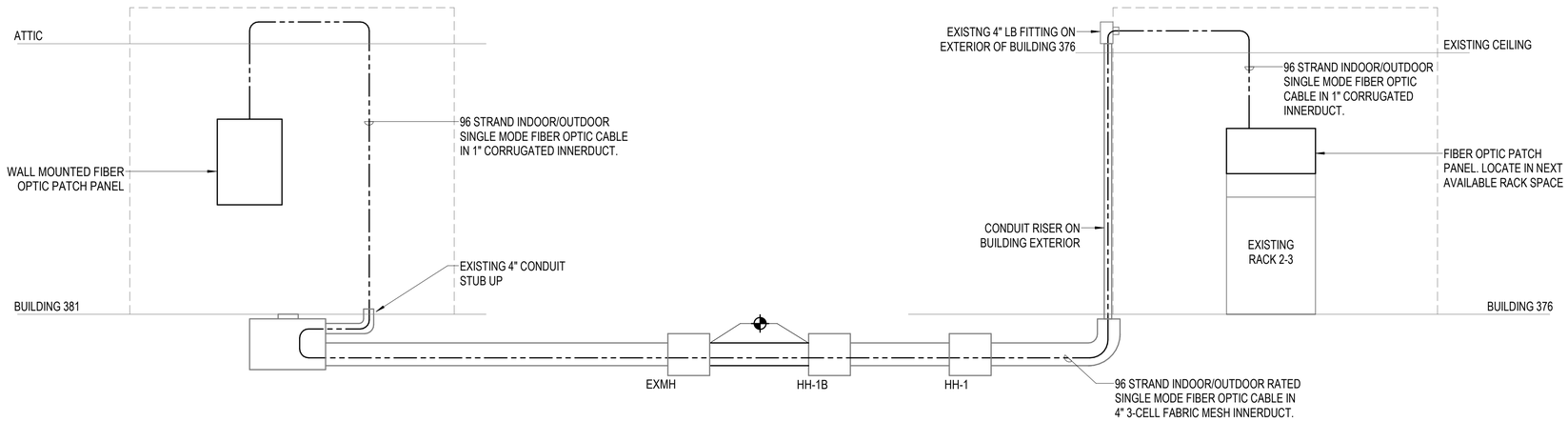

C1 BUILDING 381 TO BUILDING 376 OSP RISER DIAGRAM

SCALE: NTS

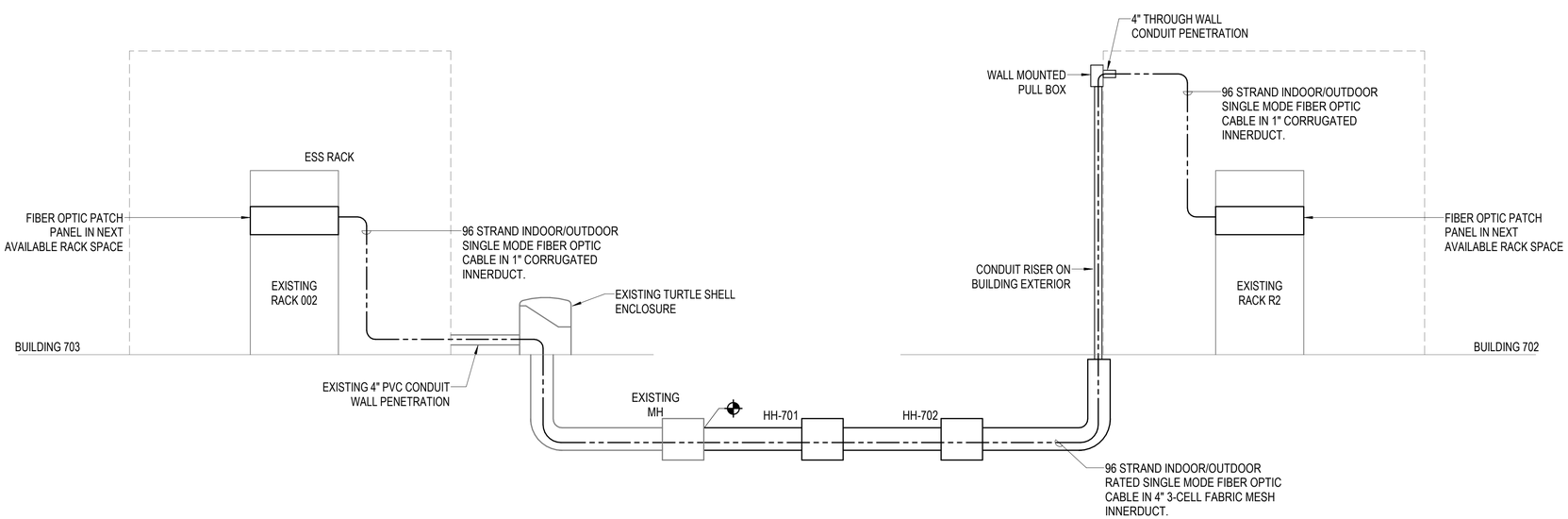

A1 BUILDING 702 TO BUILDING 703 OSP RISER DIAGRAM

SCALE: NTS

SYM	DESCRIPTION	DATE	APPR

NAVFAC

REGISTERED COMMUNICATIONS DISTRIBUTION DESIGNER
Biggi
Jun 2025
DONALD R SELLERS
REG. NO. 110645
EXPIRES 12-31-2025
RCDD
SEAL

BAMFORTH ENGINEERS + SURVEYORS

A/E INFO

APPROVED
CAPT Jeffrey E. Lemmon, P.E.
FOR COMMANDER NAVFAC 4/22/2026

ACTIVITY
APPROVED BY
LCDR VINCE DEL GRECO, FEAD
PWD YORKTOWN, VA, VIA EMAIL
SATISFACTORY TO DATE 06/12/2025

DES MES	DRW MES	CHK DRS	
PM/DM		RY / KJY	
BRANCH MANAGER		WRB	
CHIEF ENG/ARCH		JWJ	
FIRE PROTECTION		HPN	

DEPARTMENT OF THE NAVY
NAVAL FACILITIES ENGINEERING SYSTEMS COMMAND
MIDLANT DC CORE
NAVAL FACILITIES ENGINEERING SYSTEMS COMMAND - MID-ATLANTIC
NORFOLK, VA
NAVAL WEAPONS STATION
YORKTOWN, VIRGINIA
P-1419 CONVENTIONAL PROMPT STRIKE (CPS)
WEAPONS TEST FACILITY
OSP RISER DIAGRAM

SCALE: AS NOTED
EPROJECT NO.: 1783999
CONSTR. CONTR. NO.
NAVFAC DRAWING NO.
12931128
SHEET 374 OF 427

TS602

DRAWFORM REVISION: 14 SEPTEMBER 2023

7/3/2025 1:56:41 PM TS602
Autodesk Docs://23189.00 - P-1419 OPS WT Facility/BLDG-P1419-1783999-T_v24.rvt

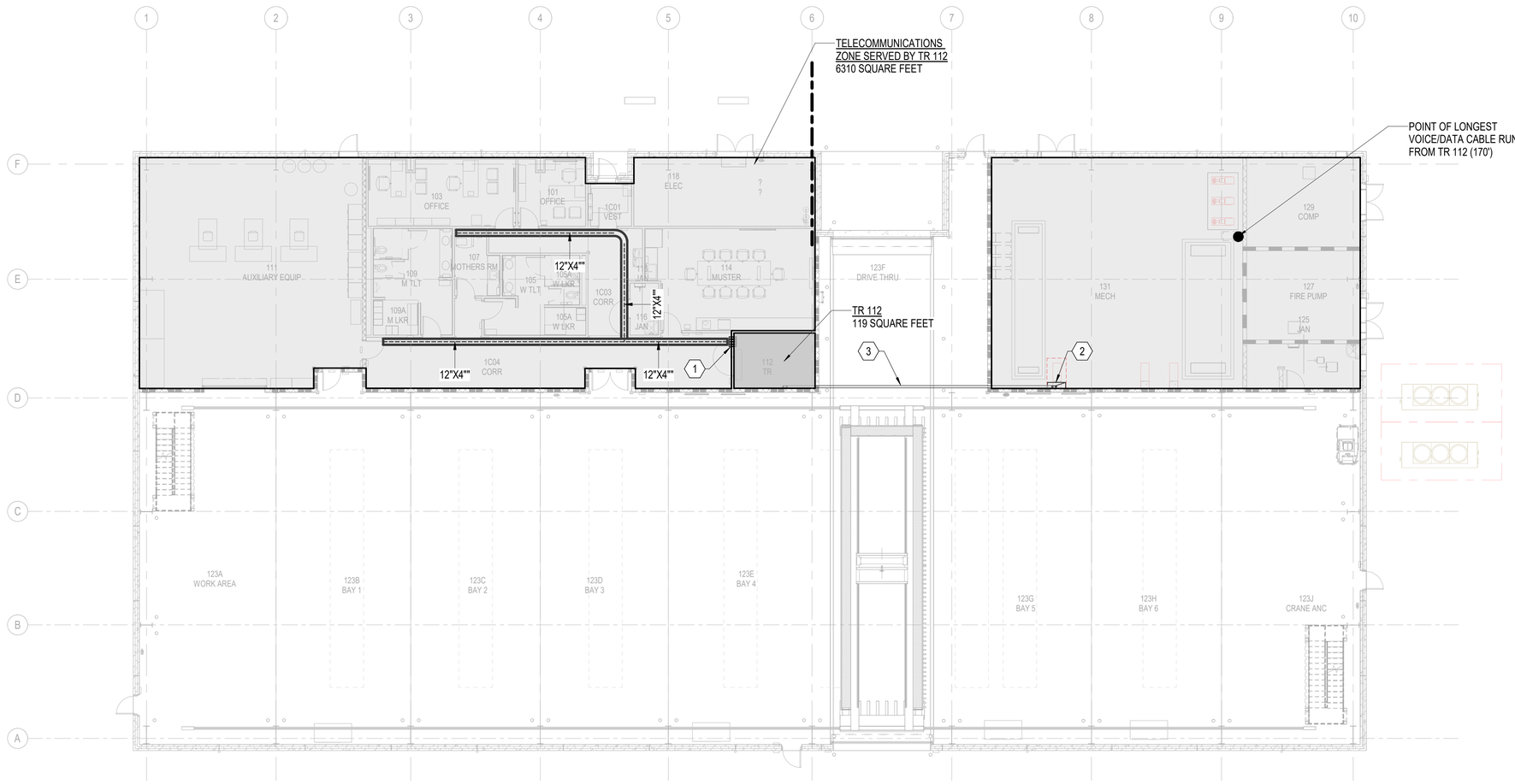

A1 FIRST FLOOR CABLE TRAY PLAN, OVERALL

SCALE: 3/32" = 1'-0"

GENERAL NOTES

A. ALL CABLE TRAY IS 12" WIDE BY 4" DEEP BASKET TYPE UNLESS OTHERWISE NOTED.
B. LOCATE CABLE TRAY ABOVE FINISHED CEILINGS IN CORRIDORS AND ROOMS INDICATED ON THIS DRAWING. ACTUAL LOCATION AND ROUTING WITHIN THE CORRIDORS AND ROOMS WILL BE COORDINATED WITH OTHER TRADES AND SYSTEMS. PROVIDE OFFSETS AND BENDS AS REQUIRED TO AVOID OBSTACLES AND COORDINATE WITH OTHER TRADES AND SYSTEMS. MAINTAIN 12" CLEAR ZONE ABOVE AND ON ONE SIDE OF ALL CABLE TRAYS. CABLE TRAY WILL BE INSTALLED SO THAT THE BOTTOM OF THE TRAY IS NO HIGHER THAN 18" ABOVE THE CEILING AND NO CLOSER THAN 4" TO THE CEILING.
C. PROVIDE MINIMUM 5" SEPARATION BETWEEN FLUORESCENT LIGHTING FIXTURES AND CABLE TRAY.

NOTES

1 PROVIDE (4) 4" CONDUIT PENETRATIONS.
2 PROVIDE A 3' SQUARE BY 1' DEEP PULL BOX WITH HINGED COVER. MOUNT PULL BOX 10' AFF TO TOP.
3 PROVIDE (2) 4" CONDUIT FROM PULL BOX TO LADDER RACK IN TR 112. ROUTE CONDUIT OVER TRUCK LANE. WHEN CROSSING OVER TRUCK LANE THE MINIMUM HEIGHT FOR CONDUIT IS 25' AFF TO BOTTOM. PROVIDE INSULATED BUSHING ON CONDUIT ENDS.

KEY PLAN

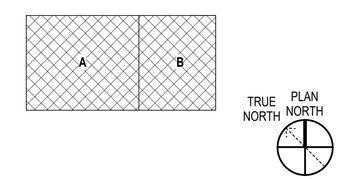

GRAPHIC SCALE(S)

3/32" = 1' - 0" 0 5' 10' 20' 40'

SYM	DESCRIPTION	DATE	APPR

NAVFAC

REGISTERED COMMUNICATIONS DISTRIBUTION DESIGNER
Biggi
July 2025
DONALD R SELLERS
REG. NO. 110645
EXPIRES 12-31-2025
RCDD
SEAL

BAMFORTH ENGINEERS + SURVEYORS

AVE INFO

APPROVED
James E. Crosthwait, P.E.
FOR COMMANDER NAVFAC 4/22/2026

ACTIVITY
APPROVED BY
LCDR VINCE DEL GRECO, FEAD
PWD YORKTOWN, VA, VIA EMAIL
SATISFACTORY TO DATE 06/12/2025

DES	MES	DRW MES	CHK DRS
PM/DM			RY / KJY
BRANCH MANAGER			WRB
CHIEF ENG/ARCH			JWJ
FIRE PROTECTION			HPN

DEPARTMENT OF THE NAVY
NAVAL FACILITIES ENGINEERING SYSTEMS COMMAND
MIDLANT DC CORE
NAVAL FACILITIES ENGINEERING SYSTEMS COMMAND - MID-ATLANTIC
NORFOLK, VA
NAVAL WEAPONS STATION
YORKTOWN, VIRGINIA
P-1419 CONVENTIONAL PROMPT STRIKE (CPS)
WEAPONS TEST FACILITY
CABLE TRAY FLOOR PLAN, FIRST FLOOR, OVERALL

SCALE: AS NOTED
EPROJECT NO.: 1783999
CONSTR. CONTR. NO.
NAVFAC DRAWING NO.
12931129
SHEET 375 OF 427

TT101

DRAWFORM REVISION: 14 SEPTEMBER 2023

7/3/2025 1:56:43 PM
TT101
Autodesk Docs://23189.00 - P-1419 CPS WT Facility/BLDG-P1419-1783999-T_v24.rvt

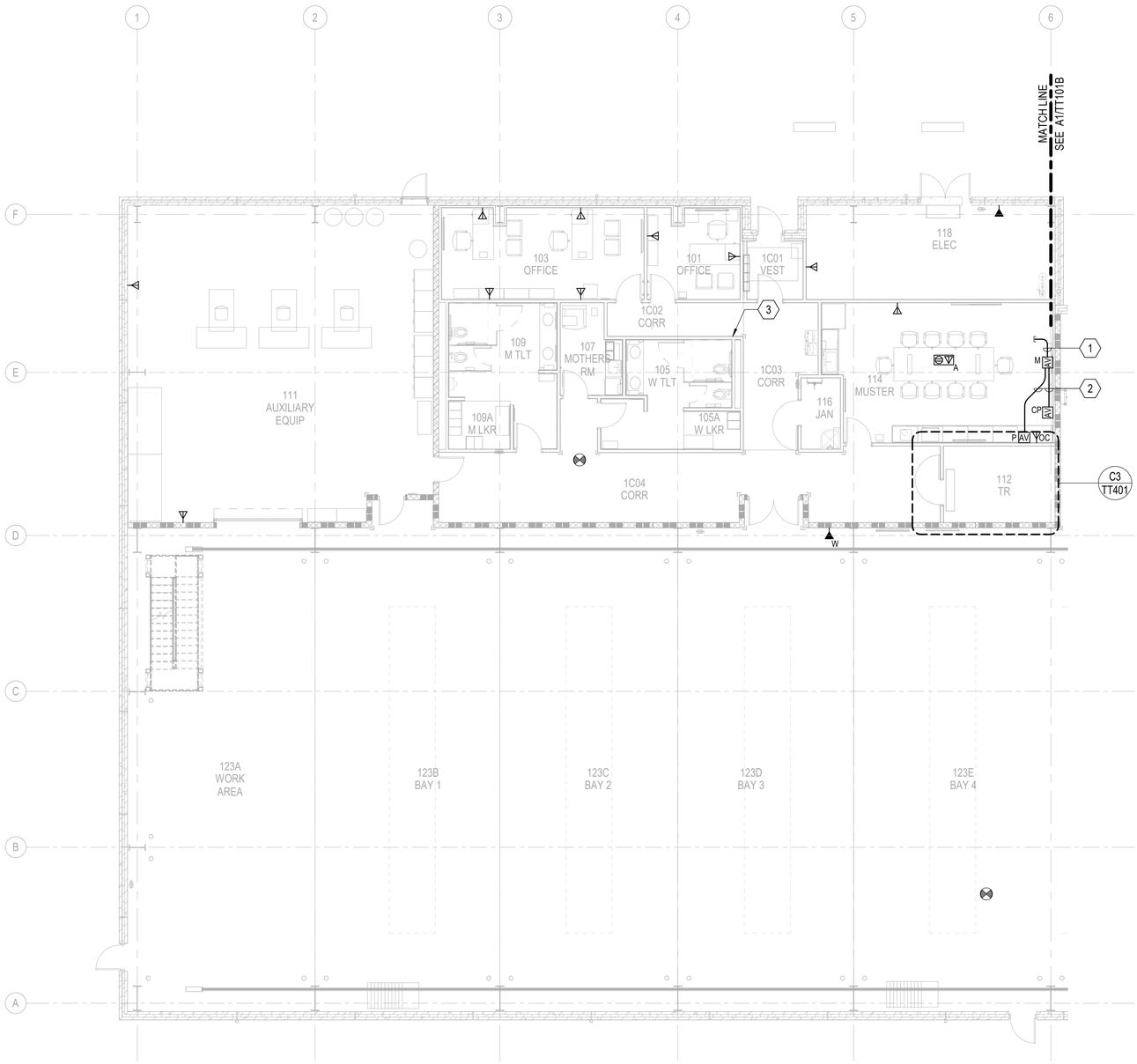

A1 FIRST FLOOR TELECOMMUNICATIONS FLOOR PLAN, FIRST FLOOR, AREA A

SCALE: 1/8" = 1'-0"

GENERAL NOTES

NOTES

1. PROVIDE (2) 1" CONDUIT FROM BOX TO 3" ABOVE NEAREST ACCESSIBLE CEILING.
2. PROVIDE (1) 1-1/4" CONDUIT FROM BOX TO PRESENTER LOCATION BOX.
3. 1" CONDUIT FROM FIRE ALARM/MASS NOTIFICATION PANEL (FMCP) TO TR 112 WITH (1) CAT 6 CABLE FOR FIRE ALARM/MASS NOTIFICATION TELEPHONE CONNECTIONS. TERMINATE CAT 6 ON DEDICATED WALL MOUNTED 110 BLOCK. LABEL 110 BLOCK "FIRE ALARM TELEPHONE CABLES. DO NOT REMOVE."

KEY PLAN

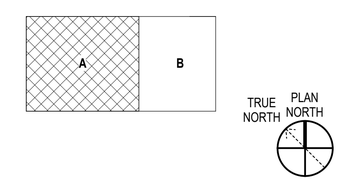

GRAPHIC SCALE(S)

1/8" = 1' - 0" 0 5' 10' 15' 30'

SYM	DESCRIPTION	DATE	APPR

NAVFAC

REGISTERED COMMUNICATIONS DISTRIBUTION DESIGNER
Bicsi
3 June 2025
DONALD R SELLERS
REG. NO. 110645
EXPIRES 12-31-2025
RCDD
SEAL

BAMFORTH ENGINEERS + SURVEYORS

AVE INFO

APPROVED
James E. Lowrey, P.E.
FOR COMMANDER NAVFAC 4/22/2026

ACTIVITY:
APPROVED BY
LCDR VINCE DEL GRECO, FEAD
PWD YORKTOWN, VA, VIA EMAIL

SATISFACTORY TO DATE 06/12/2025

DES MES | DRW MES | CHK DRS

PM/DM RY / KJY
BRANCH MANAGER WRB
CHIEF ENG/ARCH JWJ
FIRE PROTECTION HPN

DEPARTMENT OF THE NAVY
NAVAL FACILITIES ENGINEERING SYSTEMS COMMAND
MIDLANT DC CORE
NAVAL FACILITIES ENGINEERING SYSTEMS COMMAND - MID-ATLANTIC
NORFOLK, VA
NAVAL WEAPONS STATION
YORKTOWN, VIRGINIA
P-1419 CONVENTIONAL PROMPT STRIKE (CPS)
WEAPONS TEST FACILITY
TELECOMMUNICATIONS FLOOR PLAN, FIRST FLOOR, AREA A

SCALE: AS NOTED
EPROJECT NO.: 1783999
CONSTR. CONTR. NO.
NAVFAC DRAWING NO.
12931130
SHEET 376 OF 427

TT101A

DRAWFORM REVISION: 14 SEPTEMBER 2023

TT101A
7/3/2025 1:56:44 PM
Autodesk Docs://23189.00 - P-1419 CPS WTF Facility/BLDG-P1419-1783999-T_v24.rvt

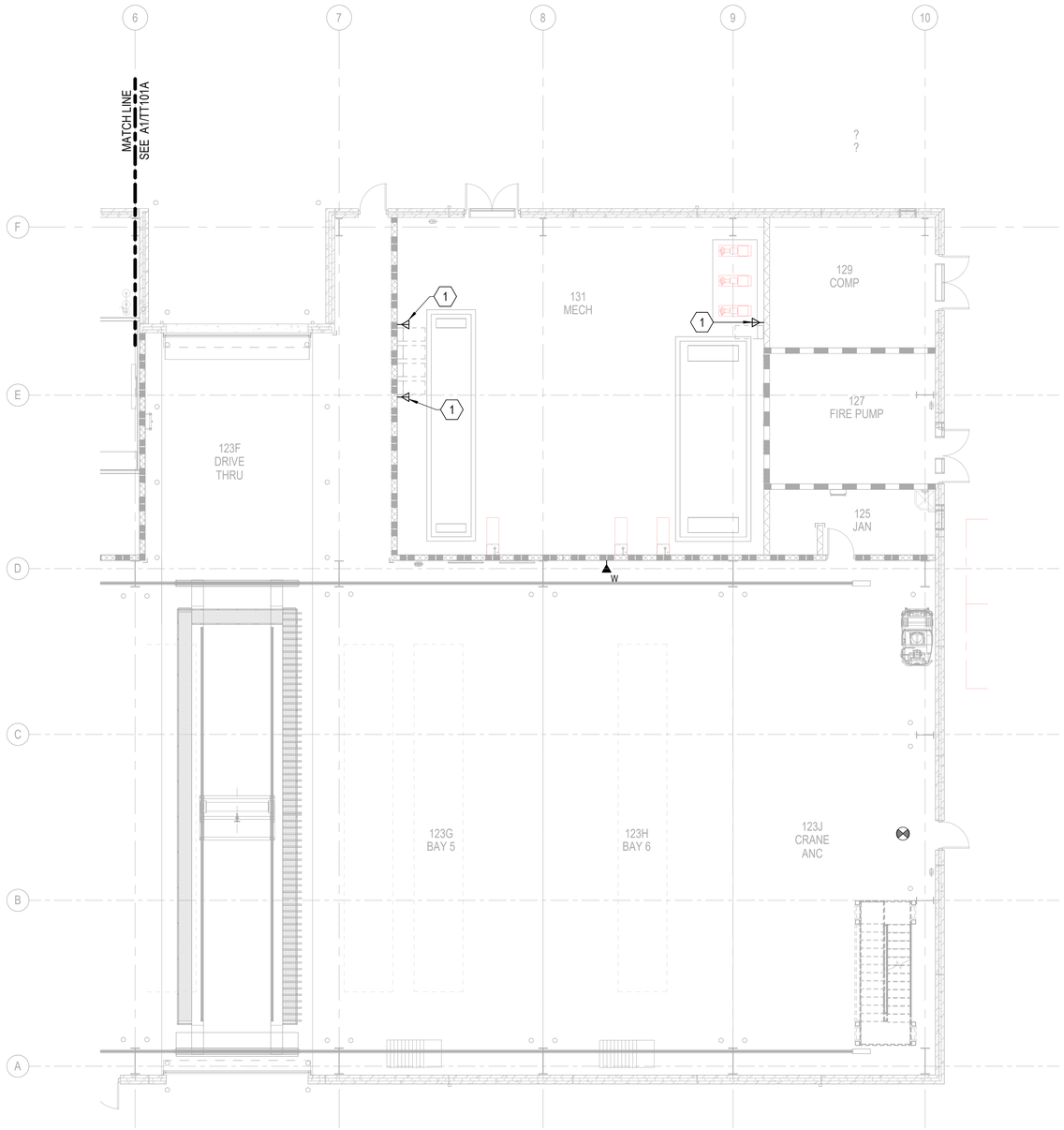

A1 FIRST FLOOR TELECOMMUNICATIONS FLOOR PLAN, FIRST FLOOR, AREA B

SCALE: 1/8" = 1'-0"

GENERAL NOTES

NOTES

1 ROUTE CONDUIT FOR VOICE DATA OUTLET TO BOTTOM OF PULL BOX IN RM 131. SEE TT101 FOR LOCATION.

KEY PLAN

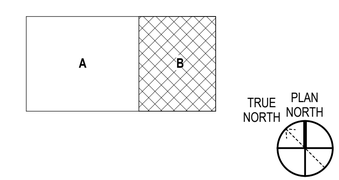

GRAPHIC SCALE(S)

1/8" = 1' - 0" 0 5' 10' 15' 30'

SYM	DESCRIPTION	DATE	APPR

NAVFAC

REGISTERED COMMUNICATIONS DISTRIBUTION DESIGNER
DONALD R SELLERS
REG. NO. 110645
EXPIRES 12-31-2025
RCDD
SEAL

BAMFORTH ENGINEERS + SURVEYORS

A/E INFO

APPROVED
James E. Donahue, R.A.
FOR COMMANDER NAVFAC

ACTIVITY
APPROVED BY
LCDR VINCE DEL GRECO, FEAD
PWD YORKTOWN, VA, VIA EMAIL
SATISFACTORY TO DATE 06/12/2025

DES MES	DRW MES	CHK DRS	
PM/DM	RY / KJY		
BRANCH MANAGER	WRB		
CHIEF ENG/ARCH	JWJ		
FIRE PROTECTION	HPN		

DEPARTMENT OF THE NAVY
NAVAL FACILITIES ENGINEERING SYSTEMS COMMAND - MID-ATLANTIC
MIDLANT DC CORE
NAVAL FACILITIES ENGINEERING SYSTEMS COMMAND
NORFOLK, VA
NAVAL WEAPONS STATION
YORKTOWN, VIRGINIA
P-1419 CONVENTIONAL PROMPT STRIKE (CPS)
WEAPONS TEST FACILITY
TELECOMMUNICATIONS FLOOR PLAN, FIRST FLOOR, AREA B

SCALE: AS NOTED
EPROJECT NO.: 1783999
CONSTR. CONTR. NO.
NAVFAC DRAWING NO. 12931131
SHEET 377 OF 427

TT101B

DRAWFORM REVISION: 14 SEPTEMBER 2023

7/3/2025 1:58:45 PM TT101B
Autodesk Docs://231889.00 - P-1419 CPS WT Facility/BLDG-P1419-1783999-T_v24.rvt

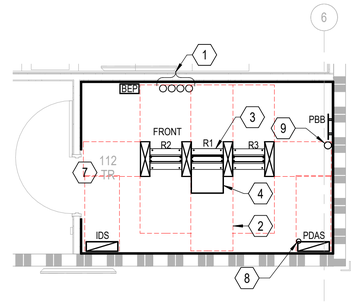

FLOOR PLAN

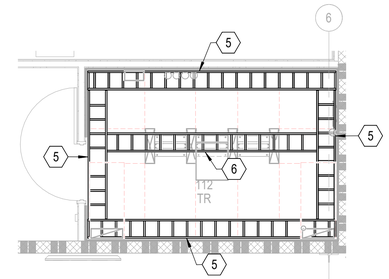

LADDER RACK PLAN

C3 ENLARGED COMM ROOM 112

SCALE: 1/4" = 1'-0" (TT101A)

GENERAL NOTES

NOTES

1 CONDUIT FROM OSP MANHOLE.
2 TYPICAL WORKING CLEARANCE.
3 TYPICAL 19" WIDE X 7' TALL TWO POST RACK.
4 RACK MOUNTED UPS.
5 WALL SUPPORTED 12" WIDE LADDER RACK CABLE RUNWAY. PROVIDE TRIANGULAR WALL STEEL SUPPORT BRACKETS AS REQUIRED. MOUNT LADDER RACK SYSTEM AT 6" ABOVE THE TOP OF THE EQUIPMENT RACKS. SEE C4/TT502 FOR SUPPORT DETAIL.
6 TRAPEZE SUPPORTED 12" WIDE LADDER RACK CABLE RUNWAY. PROVIDE ELEVATED RACK SUPPORT KIT TO SUPPORT LADDER RACK WHERE ROUTED ABOVE RACK CONTINUOUS ROWS. PROVIDE RADIUS DROP ABOVE EACH VERTICAL CABLE MANAGEMENT SECTION. SEE A4/TT502 FOR SUPPORT DETAIL.
7 SEE B3/TT504 FOR RACK ELEVATION.
8 PROVIDE (1) 2 1/2" RGS CONDUIT TO UPPER ROOF LEVEL FOR PDAS DONOR ANTENNA CABLING. SEE A1/TT502 FOR ANTENNA DETAIL.
9 4" DIRECT BURIED CONDUIT FROM CHARGING STATION SEE TS118 FOR CONTINUATION.

TRUE NORTH
PLAN NORTH

GRAPHIC SCALE(S)

1/4" = 1' - 0" 0 1' 5' 10' 15'

SYM	DESCRIPTION	DATE	APPR

NAVFAC

REGISTERED COMMUNICATIONS DISTRIBUTION DESIGNER
Bicsi
July 2025
DONALD R SELLERS
REG. NO. 110645
EXPIRES 12-31-2025
RCDD
SEAL

BAMFORTH ENGINEERS + SURVEYORS

A/E INFO

APPROVED
James E. Dunne, P.E.
FOR COMMANDER NAVFAC 11/28/2026

ACTIVITY
APPROVED BY
LCDR VINCE DEL GRECO, FEAD
PWD YORKTOWN, VA, VIA EMAIL

SATISFACTORY TO DATE 06/12/2025

DES	MES	DRW	MES	CHK	DRS
PMDM					RY / KJY
BRANCH MANAGER					WRB
CHIEF ENG/ARCH					JWJ
FIRE PROTECTION					HPN

DEPARTMENT OF THE NAVY
NAVAL FACILITIES ENGINEERING SYSTEMS COMMAND
MIDLANT DC CORE
NAVAL FACILITIES ENGINEERING SYSTEMS COMMAND - MID-ATLANTIC
NORFOLK, VA
NAVAL WEAPONS STATION
YORKTOWN, VIRGINIA
P-1419 CONVENTIONAL PROMPT STRIKE (CPS)
WEAPONS TEST FACILITY
ENLARGED TELECOMMUNICATIONS PLANS

SCALE: AS NOTED
EPROJECT NO.: 1783999
CONSTR. CONTR. NO.
NAVFAC DRAWING NO.
12931132
SHEET 378 OF 427

TT401

DRAW/FORM REVISION: 14 SEPTEMBER 2023

7/3/2025 1:56:46 PM TT401
Autodesk Docs://23189.00 - P-1419 CPS WT Facility/BLDG-P1419-1783999-T_v24.rvt

NOTES:
A. PBB MUST MEET TIA-607-D REQUIREMENTS INCLUDING HOLE SIZES, PATTERNS, AND SPACING.

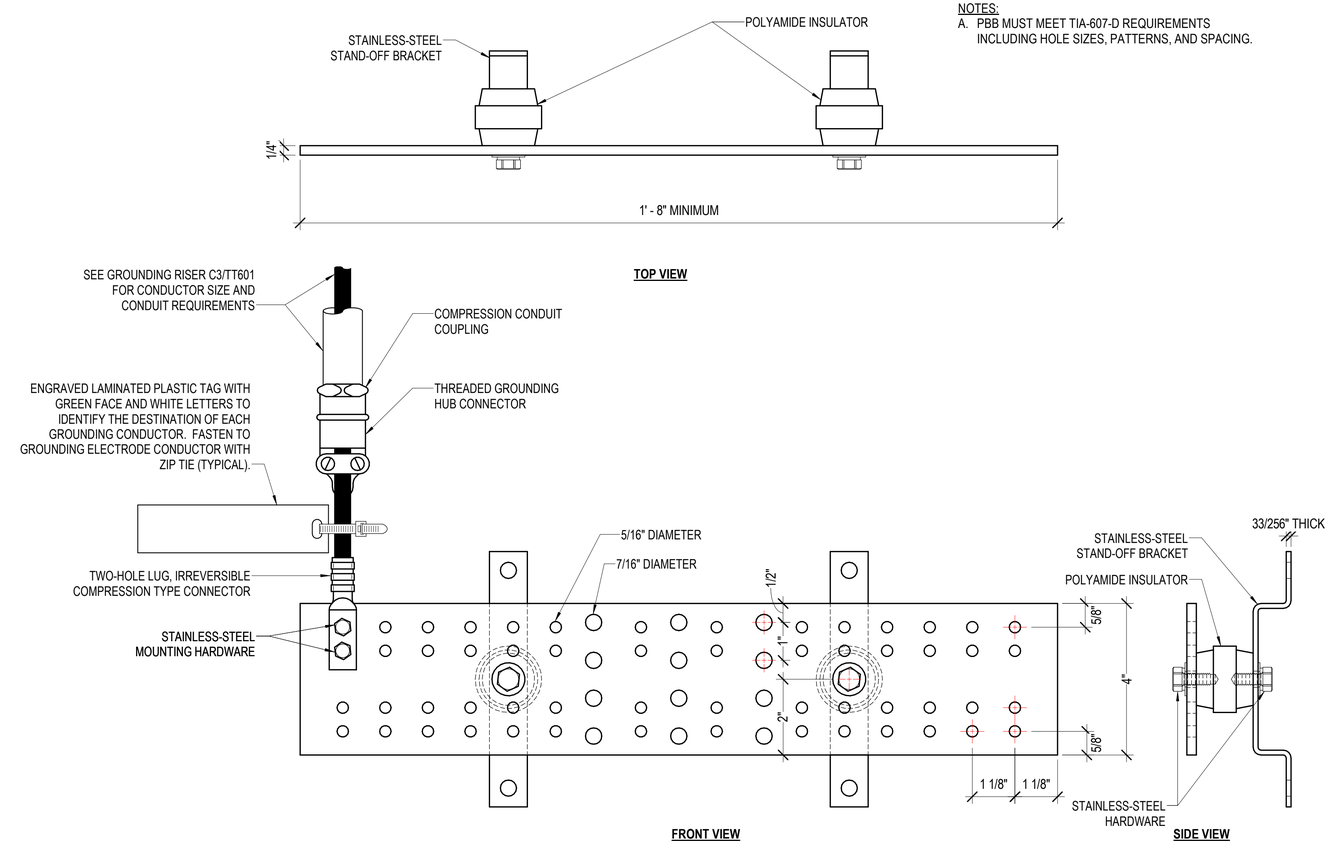

B2 PRIMARY BONDING BUSBAR (PBB) DETAIL

SCALE: NTS

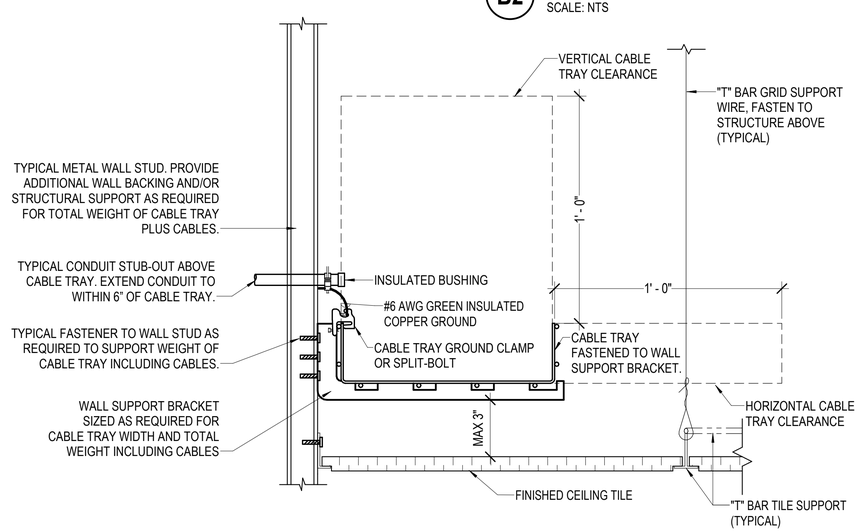

A1 CONDUIT STUB OUT AND CABLE TRAY SUPPORT DETAIL

SCALE: NTS

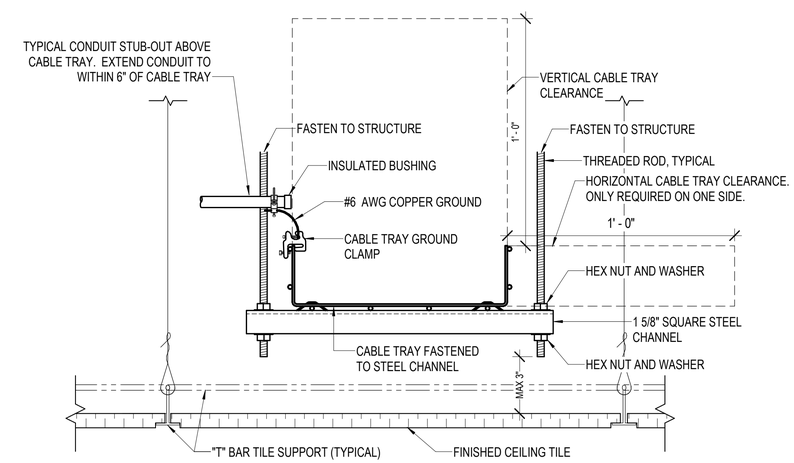

A3 CONDUIT STUB OUT AND CABLE TRAY SUPPORT DETAIL

SCALE: NTS

SYM	DESCRIPTION	DATE	APPR

NAVFAC

REGISTERED COMMUNICATIONS DISTRIBUTION DESIGNER
DONALD R SELLERS
REG. NO. 110645
EXPIRES 12-31-2025
RCDD
SEAL

BAMFORTH ENGINEERS + SURVEYORS
AVE INFO

APPROVED
James E. Bamforth, P.E.
FOR COMMANDER NAVFAC 4/22/2026

ACTIVITY
APPROVED BY
LCDR VINCE DEL GRECO, FEAD
PWD YORKTOWN, VA, VIA EMAIL
SATISFACTORY TO DATE 06/12/2025

DES MES	DRW MES	CHK DRS	
PM/DM	RY / KJY		
BRANCH MANAGER	WRB		
CHIEF ENG/ARCH	JWJ		
FIRE PROTECTION	HPN		

DEPARTMENT OF THE NAVY
NAVAL FACILITIES ENGINEERING SYSTEMS COMMAND
MID-LANT DC CORE
NAVAL WEAPONS STATION
NAVAL FACILITIES ENGINEERING SYSTEMS COMMAND - MID-ATLANTIC
NORFOLK, VA
YORKTOWN, VIRGINIA
WEAPONS TEST FACILITY
P-1419 CONVENTIONAL PROMPT STRIKE (CPS)
TELECOMMUNICATIONS DETAILS

SCALE: AS NOTED
EPROJECT NO.: 1783999
CONSTR. CONTR. NO.
NAVFAC DRAWING NO. 12931133
SHEET 379 OF 427
TT501

DRAWFORM REVISION: 14 SEPTEMBER 2023

7/3/2025 1:56:46 PM TT501
Autodesk Docs://23189.00 - P-1419 CPS WT Facility/BLDG-P1419-1783999-T_v24.rvt

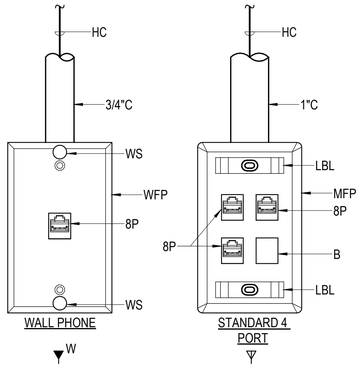

NOTES:
A. TWO CONDUITS ARE SHOWN FOR REFERENCE ONLY. ONLY ONE CONDUIT ENTRY IS REQUIRED DEPENDING ON LOCATION OF NEAREST WALL.

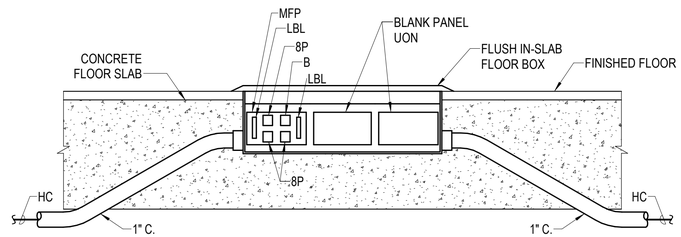

TYPICAL SLAB ON GRADE FLOOR BOX

SV PLAN SYMBOL (TYPICAL)

VOICE DATA OUTLET FACE PLATE CODES	
W	SINGLE PORT FACE PLATE. WALL PHONE WITH ONE 8P JACK AND MOUNTING STUDS

MOUNTING HEIGHT CODES	
OC	MOUNT ABOVE COUNTER TOP.

DETAIL CODES	
8P	8 POSITION MODULAR JACK
1"C	1" CONDUIT TO NEAREST CABLE TRAY UON
3/4"C	3/4" CONDUIT TO NEAREST CABLE TRAY UON
B	BLANK INSERT
CX	RG-6 COAXIAL TELEVISION CABLE TO DIRECTIONAL COUPLER
FC	F-TYPE COAXIAL CONNECTOR
HC	CAT 6A HORIZONTAL CABLE(S)
LBL	LABEL SPACE
MFP	MODULAR FACE PLATE
WFP	WALL PHONE FACE PLATE
WS	WALL PHONE MOUNTING STUD

DETAIL NOTES:

A. ALL BACK BOXES WILL BE 4 11/16" BY 2 1/8" DEEP WITH SINGLE GANG PLASTER RING UNLESS OTHERWISE INDICATED.
B. PROVIDE BLANK INSERT FOR ALL UNUSED FACEPLATE PORTS.
C. PROVIDE (1) CATEGORY 6A, 4 PAIR HORIZONTAL CABLE FOR EACH 8 POSITION MODULAR JACK FROM THE OUTLET TO HORIZONTAL PATCH PANEL IN THE INDICATED COMMUNICATIONS ROOM. SEE TELECOMMUNICATIONS ZONE ALLOCATION PLAN FOR COMMUNICATIONS ROOM IN WHICH CABLES ARE TERMINATED.
D. SEE A1/TT501 AND A3/TT501 FOR CONDUIT STUB-OUT TO CABLE TRAY DETAILS.
E. PROVIDE 6" OF SLACK AT EACH END OF EVERY HORIZONTAL CABLE TERMINATION.

B1 TYPICAL VOICE / DATA OUTLET DETAILS

SCALE: NTS

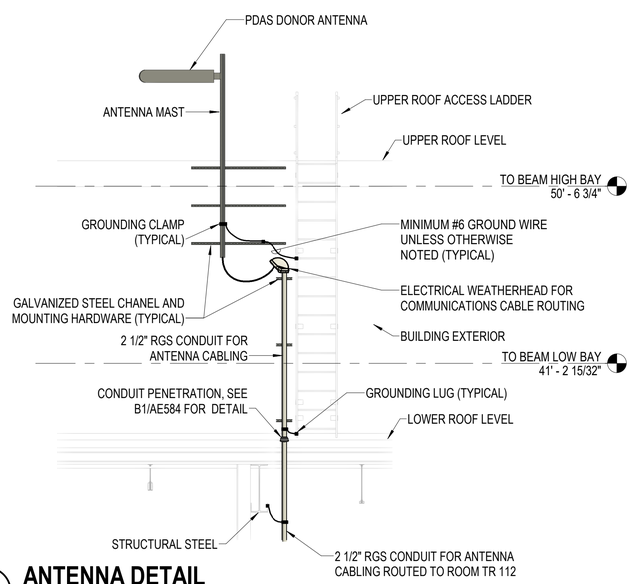

A1 ANTENNA DETAIL

SCALE: NTS

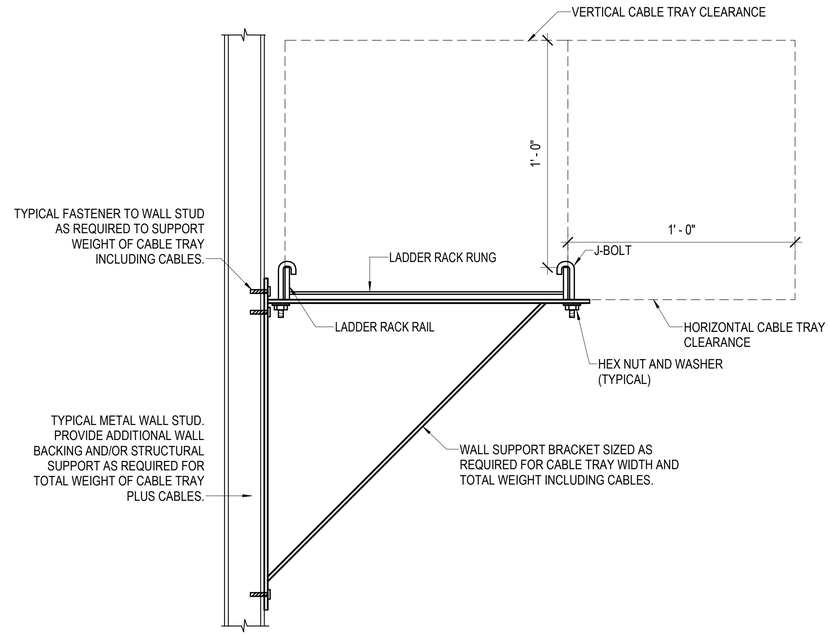

C4 LADDER RACK WALL SUPPORT DETAIL

SCALE: NTS

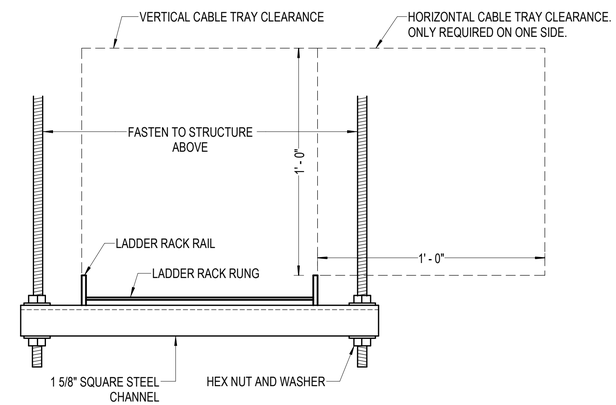

A4 LADDER RACK TRAPEZE SUPPORT DETAIL

SCALE: NTS

SYM	DESCRIPTION	DATE	APPR

NAVFAC

REGISTERED COMMUNICATIONS DISTRIBUTION DESIGNER
Biggi
Sept 2025
DONALD R SELLERS
REG. NO. 110645
EXPIRES 12-31-2025
RCDD
SEAL

BAMFORTH ENGINEERS + SURVEYORS

AVE INFO

APPROVED
James E. Gaddis, P.E.
FOR COMMANDER NAVFAC 4/22/2026

ACTIVITY:
APPROVED BY
LCDR VINCE DEL GRECO, FEAD
PWD YORKTOWN, VA, VIA EMAIL

SATISFACTORY TO DATE 06/12/2025

DES	MES	DRW MES	CHK DRS
PM/DM			RY / KJY
BRANCH MANAGER			WRB
CHIEF ENG/ARCH			JWJ
FIRE PROTECTION			HPN

DEPARTMENT OF THE NAVY
NAVAL FACILITIES ENGINEERING SYSTEMS COMMAND
MIDLANT DC CORE
NAVAL FACILITIES ENGINEERING SYSTEMS COMMAND - MID-ATLANTIC
NORFOLK, VA
NAVAL WEAPONS STATION
YORKTOWN, VIRGINIA
P-1419 CONVENTIONAL PROMPT STRIKE (CPS)
WEAPONS TEST FACILITY
TELECOMMUNICATIONS DETAILS

SCALE: AS NOTED
EPROJECT NO.: 1783999
CONSTR. CONTR. NO.
NAVFAC DRAWING NO.
12931134
SHEET 380 OF 427

TT502

DRAWFORM REVISION: 14 SEPTEMBER 2023

TT502
7/3/2025 1:56:55 PM
Autodesk Docs://2189.00 - P-1419 CPS WT Facility/BLDG-P1419-1783999-T_v24.rvt

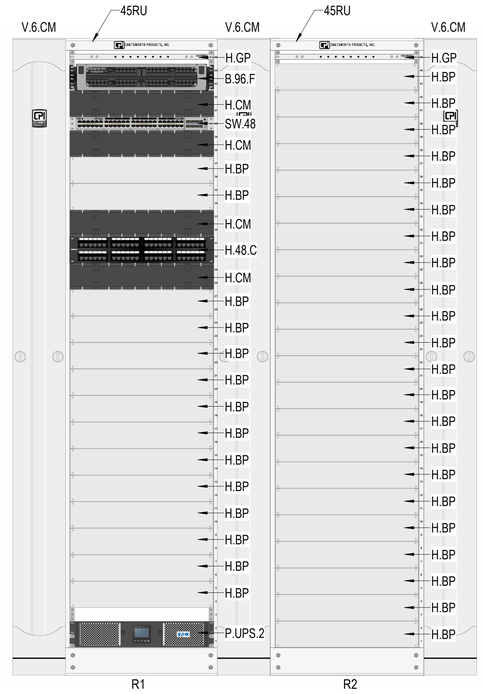

RACK ELEVATION EQUIPMENT CODES

CODE	DESCRIPTION
H.48.C	CATEGORY 6A, 48 PORT HORIZONTAL COPPER PATCH PANEL
B.96.F	96 PORT FIBER OPTIC PATCH PANEL WITH LC CONNECTORS FOR BACKBONE CABLES
H.CM	HORIZONTAL CABLE MANAGEMENT
V.6.CM	DOUBLE SIDED 6" VERTICAL CABLE MANAGEMENT
45RU	7' HIGH, 45RU EQUIPMENT RACK
SW.48	48 PORT SWITCH, GOVERNMENT FURNISHED, GOVERNMENT INSTALLED IN RACKS.
P.UPS.2	2KVA UPS
H.GP	RACK MOUNTED HORIZONTAL GROUND BUS
H.BP	BLANK OFF PANEL - SPACE FOR FUTURE EQUIPMENT

PATCH PANEL FORMULA

(TOTAL # OF CABLES)*1.25/48

- NUMBER OF PORTS PER PATCH PANEL
- TOTAL TERMINATED CABLES PLUS 25%
- TOTAL TERMINATED CAT6A HORIZONTAL CABLES IN TELECOMMUNICATIONS ZONE

SWITCH FORMULA

(((TOTAL # OF CABLES)*0.35)+(TOTAL # OF WAP CABLES))*1.3/48

- NUMBER OF PORTS PER SWITCH
- TOTAL TERMINATED CABLES PLUS 30%
- TOTAL TERMINATED WAP CAT6A HORIZONTAL CABLES IN TELECOMMUNICATIONS ZONE
- SWITCH PORT DIVERSITY FACTOR
- TOTAL TERMINATED CAT6A HORIZONTAL CABLES IN TELECOMMUNICATIONS ZONE EXCLUDING WAP CABLES

48-PORT PATCH PANEL AND 48-PORT SWITCH CALCULATIONS

OUTLET TYPE	OUTLET QUANTITY	TOTAL PORTS	NUMBER OF CABLES
TOTAL 3 PORT DATA OUTLETS			
STANDARD OUTLET	11	3	33
TOTAL FLOOR BOX OUTLETS			
FLOOR BOX OUTLET	1	3	3
TOTAL NUMBER OF CABLES			36
TOTAL NUMBER OF 48 PORT HORIZONTAL COPPER PATCH PANELS			1
TOTAL NUMBER OF 48 PORT SWITCHES			1

B3 TR 112 RACK ELEVATION

SCALE: NTS

SYM	DESCRIPTION	DATE	APPR

NAVFAC

REGISTERED COMMUNICATIONS DISTRIBUTION DESIGNER
Bicsi
July 2025
DONALD R SELLERS
REG. NO. 110645
EXPIRES 12-31-2025
RCDD
SEAL

BAMFORTH ENGINEERS + SURVEYORS

AVE INFO

APPROVED
James E. Donahue, R.A.
FOR COMMANDER NAVFAC 4/22/2026

ACTIVITY
APPROVED BY
LCDR VINCE DEL GRECO, FEAD
PWD YORKTOWN, VA. VIA EMAIL

SATISFACTORY TO DATE 06/12/2025

DES MES	DRW MES	CHK DRS	
PM/DM			RY / KJY
BRANCH MANAGER			WRB
CHIEF ENG/ARCH			JWJ
FIRE PROTECTION			HPN

DEPARTMENT OF THE NAVY
NAVAL FACILITIES ENGINEERING SYSTEMS COMMAND
MIDLANT DIC CORE
NAVAL FACILITIES ENGINEERING SYSTEMS COMMAND - MID-ATLANTIC
NORFOLK, VA.
NAVAL WEAPONS STATION
YORKTOWN, VIRGINIA
P-1419 CONVENTIONAL PROMPT STRIKE (CPS)
WEAPONS TEST FACILITY
RACK ELEVATIONS

SCALE: AS NOTED
EPROJECT NO.: 1783999
CONSTR. CONTR. NO.
NAVFAC DRAWING NO.
12931135
SHEET 381 OF 427
TT503

DRAWFORM REVISION: 14 SEPTEMBER 2023

7/3/2025 1:56:56 PM TT503
Autodesk Docs://23189.00 - P-1419 CPS WT Facility/BLDG-P1419-1783999-T_r24.rvt

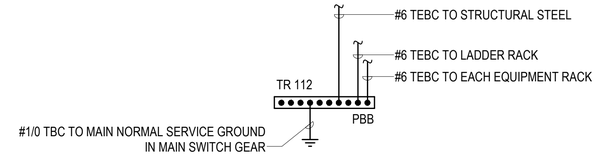

NOTES:

A. TELECOMMUNICATIONS GROUNDING WILL BE IN ACCORDANCE WITH TIA-607-D.
B. BOND CONDUIT TO GROUND BUS.
C. CONDUCTOR TO CONDUCTOR BONDING WILL BE BY EXOTHERMIC WELD.
D. LABEL EACH GROUNDING AND BONDING CONDUCTOR AS REQUIRED BY TIA-607-D.

TELECOMMUNICATIONS GROUNDING CONDUCTOR LEGEND	
TBC	TELECOMMUNICATIONS BONDING CONDUCTOR
TEBC	TELECOMMUNICATIONS EQUIPMENT BONDING CONDUCTOR

C3 GROUNDING RISER DIAGRAM

SCALE: NTS

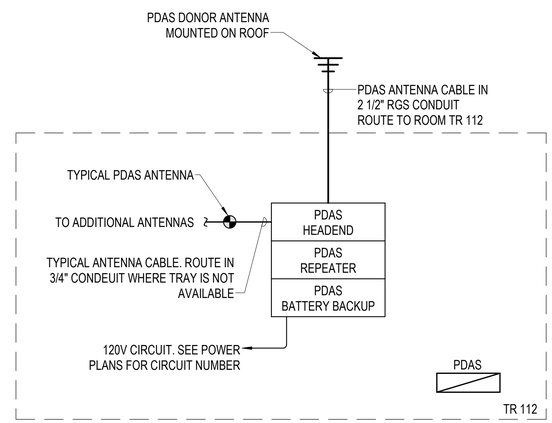

B3 PUBLIC SAFETY DAS RISER DIAGRAM

SCALE: NTS

SYM	DESCRIPTION	DATE	APPR

NAVFAC

REGISTERED COMMUNICATIONS DISTRIBUTION DESIGNER
Bissi
Jun 2025
DONALD R SELLERS
REG. NO. 110645
EXPIRES 12-31-2025
RCDD
SEAL

BAMFORTH ENGINEERS + SURVEYORS

AVE INFO

APPROVED
James E. Bamforth, P.E.
FOR COMMANDER NAVFAC 4/22/2026

ACTIVITY
APPROVED BY
LCDR VINCE DEL GRECO, FEAD
PWD YORKTOWN, VA, VIA EMAIL
SATISFACTORY TO DATE 06/12/2025

DES	MES	DRW	MES	CHK	DRS
PM/DM	RY / KJY				
BRANCH MANAGER	WRB				
CHIEF ENG/ARCH	JWJ				
FIRE PROTECTION	HPN				

DEPARTMENT OF THE NAVY
NAVAL FACILITIES ENGINEERING SYSTEMS COMMAND
MIDLANT DC CORE
NAVAL FACILITIES ENGINEERING SYSTEMS COMMAND - MID-ATLANTIC
NORFOLK, VA
NAVAL WEAPONS STATION
YORKTOWN, VIRGINIA
P-1419 CONVENTIONAL PROMPT STRIKE (CPS)
WEAPONS TEST FACILITY
TELECOMMUNICATIONS RISER DIAGRAMS

SCALE: AS NOTED
EPROJECT NO.: 1783999
CONSTR. CONTR. NO.
NAVFAC DRAWING NO.
12931136
SHEET 382 OF 427

TT601

DRAWFORM REVISION: 14 SEPTEMBER 2023

7/3/2025 1:56:56 PM TT601
Autodesk Docs://23189.00 - P-1419 CPS WT Facility/BLDG-P1419-1783999-T_v24.rvt

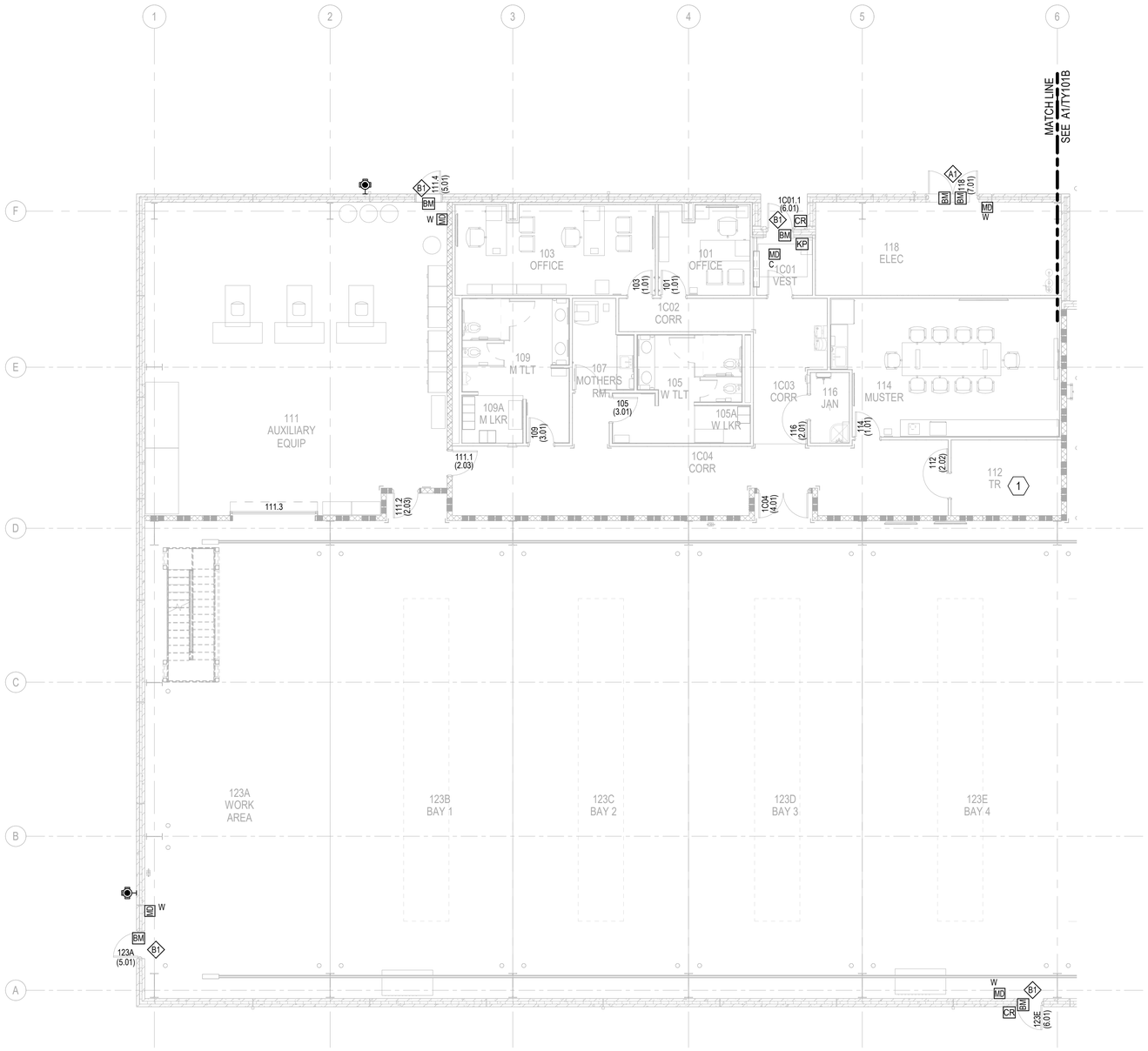

A1 FIRST FLOOR SECURITY FLOOR PLAN, FIRST FLOOR, AREA A

SCALE: 1/8" = 1'-0"

GENERAL NOTES

A. INTRUSION DETECTION BOUNDARY IS THE EXTERIOR WALLS.

NOTES

1 SEE C3/TT401 FOR LOCATION OF ACCESS CONTROL EQUIPMENT PANEL, INTRUSION DETECTION EQUIPMENT PANEL, AND ESS EQUIPMENT RACK.

KEY PLAN

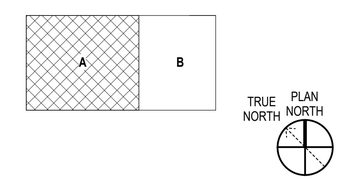

GRAPHIC SCALE(S)

1/8" = 1' - 0" 0 5' 10' 15' 30'

SYM	DESCRIPTION	DATE	APPR

NAVFAC

REGISTERED COMMUNICATIONS DISTRIBUTION DESIGNER
Bicsi
DONALD R SELLERS
REG. NO. 110645
EXPIRES 12-31-2025
RCDD
SEAL

BAMFORTH ENGINEERS + SURVEYORS

A/E INFO

APPROVED
James E. Gardner, R.A.
FOR COMMANDER NAVFAC 4/22/2026

ACTIVITY
APPROVED BY
LCDR VINCE DEL GRECO, FEAD
PWD YORKTOWN, VA, VIA EMAIL

SATISFACTORY TO DATE 06/12/2025

DES MES	DRW MES	CHK DRS	
PMDM			RY / KJY
BRANCH MANAGER			WRB
CHIEF ENG/ARCH			JWJ
FIRE PROTECTION			HPN

DEPARTMENT OF THE NAVY
NAVAL FACILITIES ENGINEERING SYSTEMS COMMAND - MID-ATLANTIC
MIDLANT DC CORE
NAVAL WEAPONS STATION
NAVAL FACILITIES ENGINEERING SYSTEMS COMMAND
NORFOLK, VA
YORKTOWN, VIRGINIA
WEAPONS TEST FACILITY
P-1419 CONVENTIONAL PROMPT STRIKE (CPS)
ELECTRONIC SECURITY SYSTEM FLOOR PLAN, FIRST FLOOR, AREA A

SCALE: AS NOTED
EPROJECT NO.: 1783999
CONSTR. CONTR. NO.
NAVFAC DRAWING NO. 12931137
SHEET 383 OF 427

TY101A

DRAWFORM REVISION: 14 SEPTEMBER 2023

7/3/2025 1:56:59 PM TY101A
Autodesk Docs://23189.00 - P-1419 CPS WT Facility/BLDG-P1419-1783999-T_v24.rvt

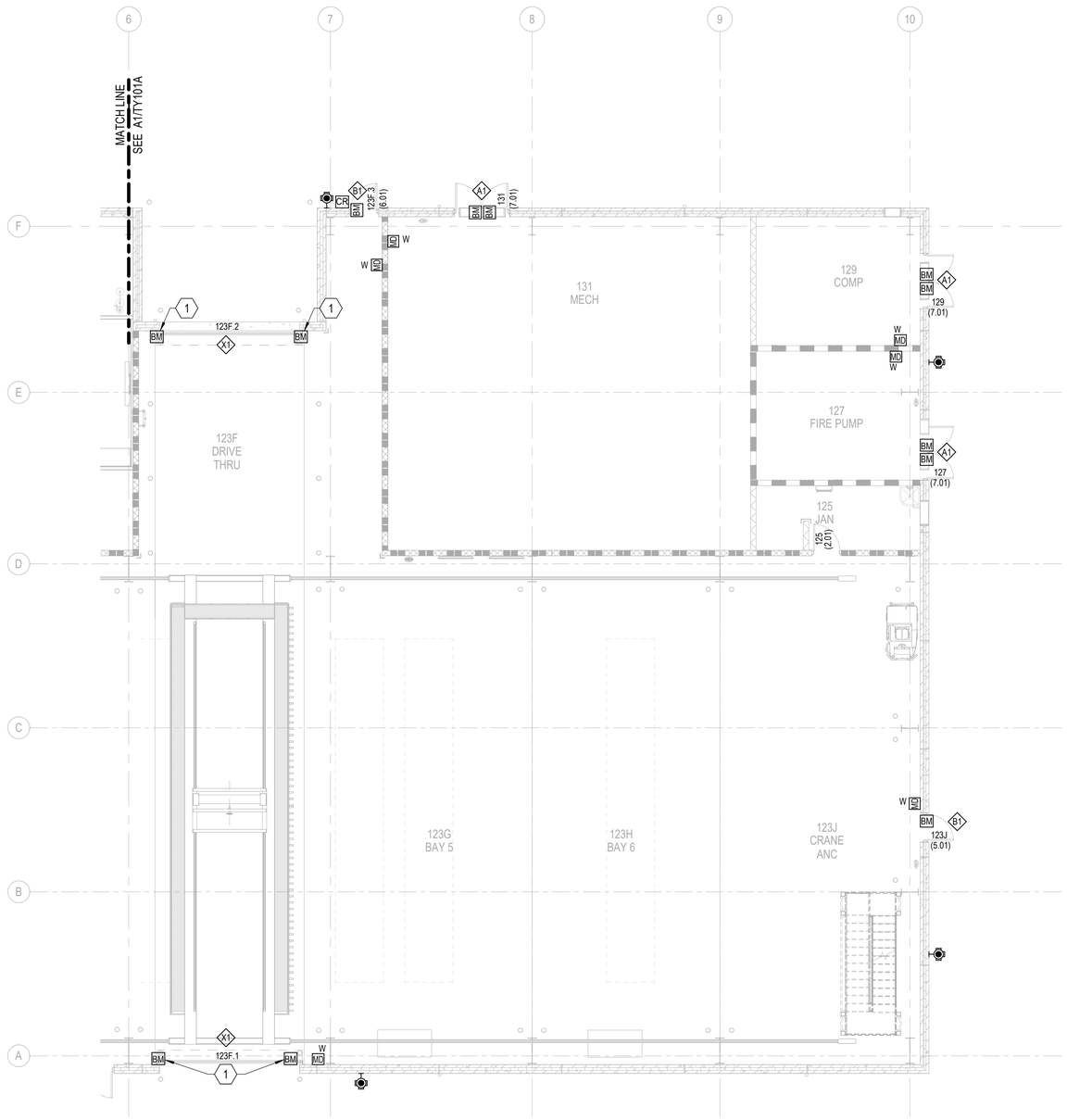

A1 FIRST FLOOR SECURITY FLOOR PLAN, FIRST FLOOR, AREA B

SCALE: 1/8" = 1'-0"

GENERAL NOTES

A. INTRUSION DETECTION BOUNDARY IS THE EXTERIOR WALLS.

NOTES

1 BALANCED MAGNETIC SWITCH IS FOR ROLL UP DOOR, SEE DETAIL C2/TY501.

KEY PLAN

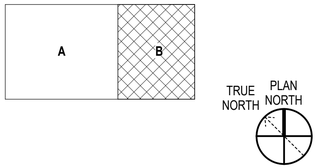

GRAPHIC SCALE(S)

1/8" = 1' - 0" 0 5' 10' 15' 30'

SYM	DESCRIPTION	DATE	APPR

NAVFAC

REGISTERED COMMUNICATIONS DISTRIBUTION DESIGNER
Biggi
June 2025
DONALD R SELLERS
REG. NO. 110645
EXPIRES 12-31-2025
RCDD
SEAL

BAMFORTH ENGINEERS + SURVEYORS

A/E INFO

APPROVED
James E. Gardner, S.A.
FOR COMMANDER NAVFAC 4/22/2026

ACTIVITY
APPROVED BY
LCDR VINCE DEL GRECO, FEAD
PWD YORKTOWN, VA, VIA EMAIL
SATISFACTORY TO DATE 06/12/2025

DES	MES	DRW MES	CHK DRS
PM/DM			RY / KJY
BRANCH MANAGER			WRB
CHIEF ENG/ARCH			JWJ
FIRE PROTECTION			HPN

DEPARTMENT OF THE NAVY
NAVAL FACILITIES ENGINEERING SYSTEMS COMMAND
MIDLANT DIC CORE
NAVAL FACILITIES ENGINEERING SYSTEMS COMMAND - MID-ATLANTIC
NORFOLK, VA
NAVAL WEAPONS STATION
YORKTOWN, VIRGINIA
P-1419 CONVENTIONAL PROMPT STRIKE (CPS)
WEAPONS TEST FACILITY
ELECTRONIC SECURITY SYSTEM FLOOR PLAN, FIRST FLOOR, AREA B

SCALE: AS NOTED
EPROJECT NO.: 1783999
CONSTR. CONTR. NO.
NAVFAC DRAWING NO.
12931138
SHEET 384 OF 427

TY101B

DRAWFORM REVISION: 14 SEPTEMBER 2023

TY101B
7/3/2025 1:57:01 PM
Autodesk Docs://23189.00 - P-1419 CPS WT Facility/BLDG-P1419-1783999-T_v24.rvt

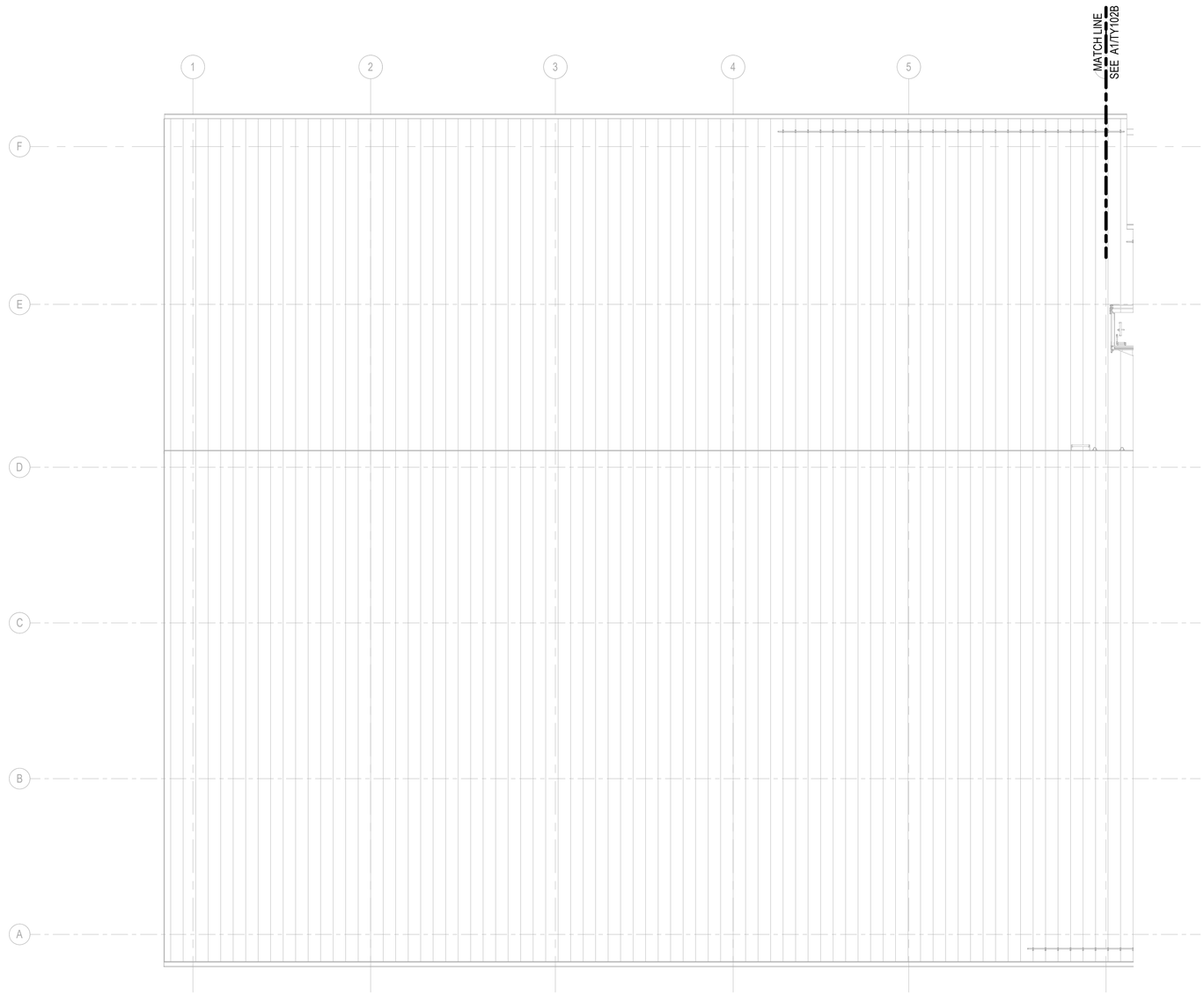

A1 FIRST FLOOR SECURITY FLOOR PLAN, ROOF, AREA A

SCALE: 1/8" = 1'-0"

GENERAL NOTES

A. SHOWN FOR REFERENCE ONLY.
B. INTRUSION DETECTION BOUNDARY IS THE EXTERIOR WALLS.

NOTES

KEY PLAN

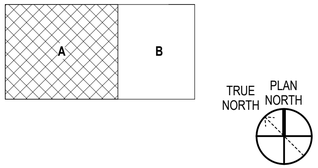

GRAPHIC SCALE(S)

1/8" = 1' - 0" 0 5' 10' 15' 30'

SYM	DESCRIPTION	DATE	APPR

NAVFAC

REGISTERED COMMUNICATIONS DISTRIBUTION DESIGNER
Bicsi
Donald R. Sellers 2025
DONALD R SELLERS
REG. NO. 110645
EXPIRES 12-31-2025
RCDD
SEAL

BAMFORTH
ENGINEERS + SURVEYORS
A/E INFO

APPROVED
Digitally signed by James E. Jones, II, P.E.
FOR COMMANDER NAVFAC 11/28/2026

ACTIVITY
APPROVED BY
LCDR VINCE DEL GRECO, FEAD
PWD YORKTOWN, VA, VIA EMAIL
SATISFACTORY TO DATE 06/12/2025

DES	MES	DRW	MES	CHK	DRS
PMDM	RY / KJY				
BRANCH MANAGER	WRB				
CHIEF ENG/ARCH	JWJ				
FIRE PROTECTION	HPN				

NAVAL FACILITIES ENGINEERING SYSTEMS COMMAND
DEPARTMENT OF THE NAVY
NAVAL FACILITIES ENGINEERING SYSTEMS COMMAND - MID-ATLANTIC
MIDLANT DC CORE NORFOLK, VA
NAVAL WEAPONS STATION YORKTOWN, VIRGINIA
P-1419 CONVENTIONAL PROMPT STRIKE (CPS)
WEAPONS TEST FACILITY
ELECTRONIC SECURITY SYSTEM FLOOR PLAN, ROOF, AREA A

SCALE: AS NOTED
EPROJECT NO.: 1783999
CONSTR. CONTR. NO.
NAVFAC DRAWING NO.
12931139
SHEET 385 OF 427
TY102A
DRAW/FORM REVISION: 14 SEPTEMBER 2023

7/3/2025 1:57:03 PM TY102A
Autodesk Docs://23189.00 - P-1419 CPS WTF Facility/BLDG-P1419-1783999-T_v24.rvt

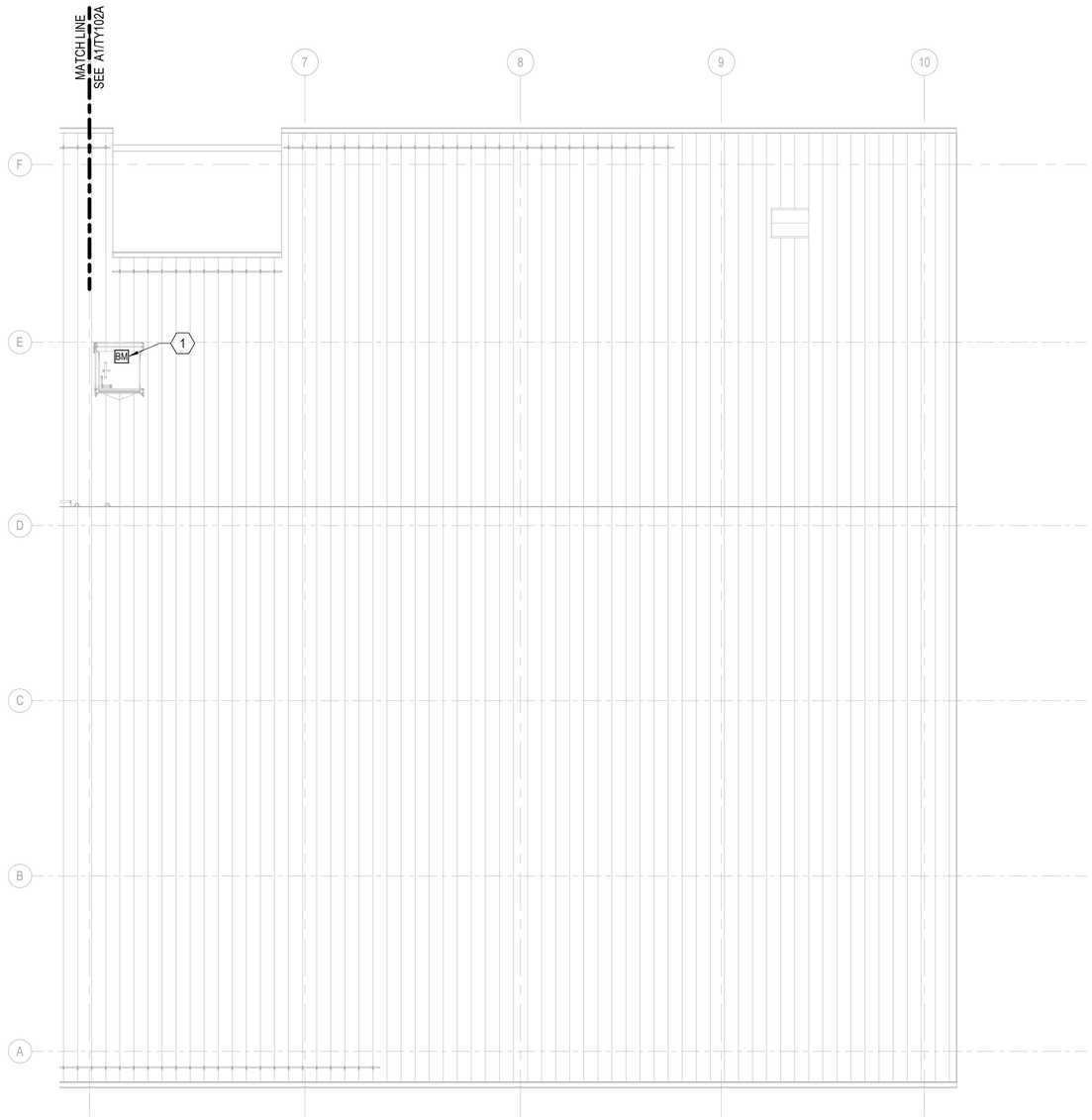

A1 FIRST FLOOR SECURITY FLOOR PLAN, ROOF, AREA B

SCALE: 1/8" = 1'-0"

GENERAL NOTES

A. INTRUSION DETECTION BOUNDARY IS THE EXTERIOR WALLS.

NOTES

1 BALANCED MAGNETIC SWITCH MOUNTED TO SECURE SIDE OF ROOF HATCH.

KEY PLAN

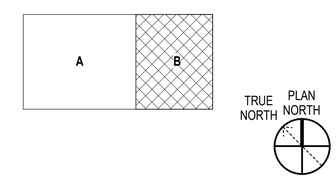

GRAPHIC SCALE(S)

1/8" = 1' - 0" 0 5' 10' 15' 30'

SYM	DESCRIPTION	DATE	APPR

NAVFAC

REGISTERED COMMUNICATIONS DISTRIBUTION DESIGNER
Biggi
Jun 2025
DONALD R SELLERS
REG. NO. 110645
EXPIRES 12-31-2025
RCDD
SEAL

BAMFORTH ENGINEERS + SURVEYORS

A/E INFO

APPROVED
Name & Signature of Approving Official
FOR COMMANDER NAVFAC 11/28/2026

ACTIVITY
APPROVED BY
LCDR VINCE DEL GRECO, FEAD
PWD YORKTOWN, VA, VIA EMAIL

SATISFACTORY TO DATE 06/12/2025

DES	MES	DRW	MES	CHK	DRS

PMDM	RY / KJY
BRANCH MANAGER	WRB
CHIEF ENG/ARCH	JWJ
FIRE PROTECTION	HPN

NAVAL FACILITIES ENGINEERING SYSTEMS COMMAND
DEPARTMENT OF THE NAVY
NAVAL FACILITIES ENGINEERING SYSTEMS COMMAND - MID-ATLANTIC
MIDLANT DC CORE
NORFOLK, VA
NAVAL WEAPONS STATION
YORKTOWN, VIRGINIA
P-1419 CONVENTIONAL PROMPT STRIKE (CPS)
WEAPONS TEST FACILITY
ELECTRONIC SECURITY SYSTEM FLOOR PLAN, ROOF, AREA B

SCALE: AS NOTED
EPROJECT NO.: 1783999
CONSTR. CONTR. NO.
NAVFAC DRAWING NO.
12931140
SHEET 386 OF 427
TY102B

DRAW/FORM REVISION: 14 SEPTEMBER 2023

7/3/2025 1:57:05 PM
TY102B
Autodesk Docs://23189.00 - P-1419 CPS WTF Facility/BLDG-P1419-1783999-T_v24.rvt

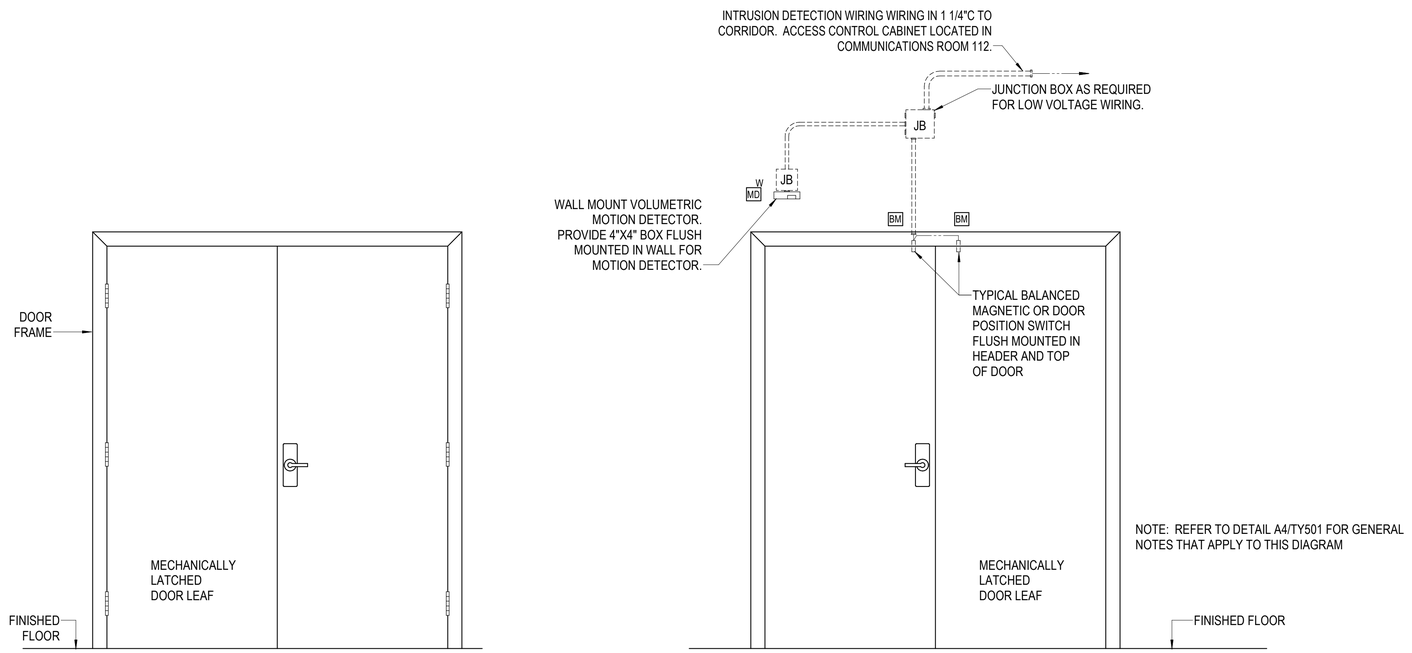

C1 ELECTRONIC SECURITY SYSTEM DETAIL - DOOR CONTROL TYPE "A1"

SCALE: NTS

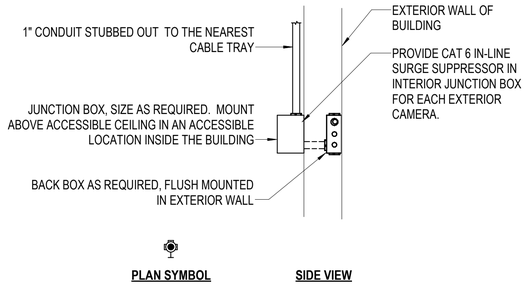

D3 WALL MOUNTED FIXED DOME CAMERA DETAIL

SCALE: SCALE: NTS

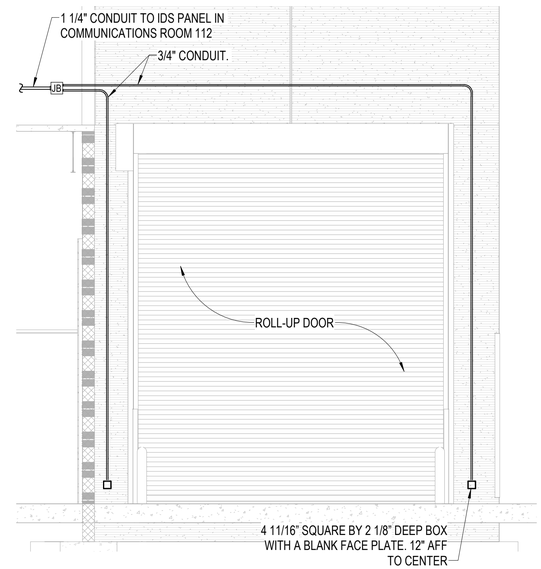

B4 ROLL-UP DOORS IDS DEVICE ELEVATION

SCALE: NTS

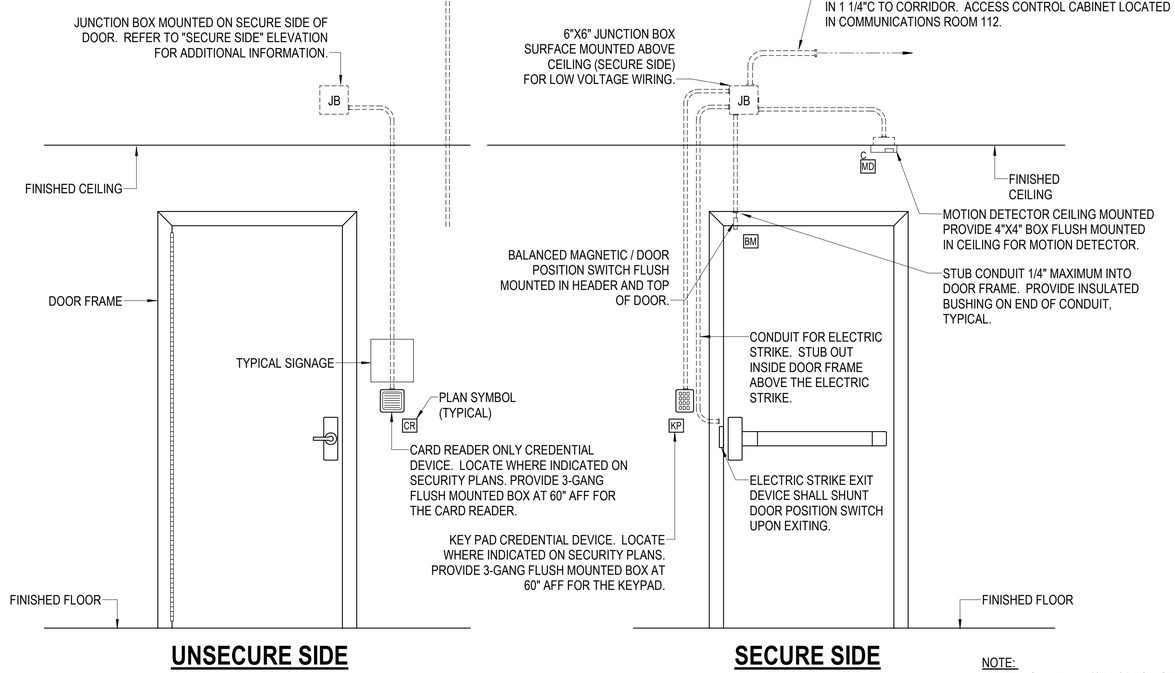

NOTE:
REFER TO DETAIL A4/TY501 FOR GENERAL NOTES THAT APPLY TO THIS DIAGRAM

A1 ELECTRONIC SECURITY SYSTEM DETAIL - DOOR CONTROL TYPE "B1"

SCALE: NTS

A. REFER TO ELECTRONIC SECURITY PLANS FOR INDIVIDUAL DOOR TYPE LOCATIONS.
B. PROVIDE ACCESS CONTROL WIRING AS REQUIRED. COORDINATE WIRING REQUIREMENTS AND ACCESS CONTROL INTERFACE WITH ACTUAL DOOR HARDWARE PROVIDED.
C. DOORS, FRAMES, HARDWARE AND LOCKING HARDWARE PROVIDED AND INSTALLED BY DOOR HARDWARE PROVIDER.
D. ALL COMPONENTS OF THE ACCESS CONTROL SYSTEM MUST BE UL294 LISTED.
E. LATCH AND HINGE SIDES OF DOORS ARE VARIED FOR INDIVIDUAL DOORS. VERIFY LATCH AND HINGE SIDE FOR EACH DOOR PRIOR TO ROUGH-IN.
F. VERIFY ALL CONDUIT SIZES, BOX SIZES AND CONNECTIVITY WITH ELECTRONIC SECURITY SYSTEM INSTALLER PRIOR TO ROUGH-IN. ANY CHANGES REQUIRED AFTER ROUGH-IN MUST BE PERFORMED AT NO ADDITIONAL COST TO THE OWNER.
G. ACCESS CONTROL WIRING MUST BE INSTALLED IN 3/4" CONDUIT UNLESS OTHERWISE NOTED.
H. DASHED LINES INDICATE ITEMS CONCEALED IN WALL OR ABOVE CEILING.
I. WHERE CREDENTIAL DEVICE IS TO BE LOCATED BENEATH SIGNAGE, COORDINATE HORIZONTAL MOUNTING LOCATION OF CREDENTIAL DEVICE TO BE CENTERED ON SIGNAGE . WHERE SIZE OF SIGNAGE DOES NOT ALLOW FOR MOUNTING OF CREDENTIAL DEVICE AT 42"AFF TO CENTER, ADJUST CREDENTIAL DEVICE MOUNTING HEIGHT TO PROVIDE A MINIMUM OF 1/2" CLEAR FROM THE BOTTOM OF SIGNAGE TO THE TOP OF THE CREDENTIAL DEVICE. REFER TO INTERIOR SIGNAGE PLANS FOR SIGNAGE LOCATION AND TYPE.

A4 DOOR CONTROL GENERAL NOTES

SCALE: NTS

SYM	DESCRIPTION	DATE	APPR

NAVFAC

REGISTERED COMMUNICATIONS DISTRIBUTION DESIGNER
Bicsi
DONALD R SELLERS
REG. NO. 110645
EXPIRES 12-31-2025
RCDD
SEAL

BAMFORTH ENGINEERS + SURVEYORS

A/E INFO

APPROVED
James E. Jacobs, Jr., P.E.
FOR COMMANDER NAVFAC 4/28/2026

ACTIVITY
APPROVED BY
LCDR VINCE DEL GRECO, FEAD
PWD YORKTOWN, VA. VIA EMAIL
SATISFACTORY TO DATE 06/12/2025

DES	MES	DRW	MES	CHK	DRS
PM/DM	RY / KJY				
BRANCH MANAGER	WRB				
CHIEF ENG/ARCH	JWJ				
FIRE PROTECTION	HPN				

DEPARTMENT OF THE NAVY
NAVAL FACILITIES ENGINEERING SYSTEMS COMMAND
MIDLANT DIC CORE
NAVAL FACILITIES ENGINEERING SYSTEMS COMMAND - MID-ATLANTIC
NORFOLK, VA.
NAVAL WEAPONS STATION
YORKTOWN, VIRGINIA
P-1419 CONVENTIONAL PROMPT STRIKE (CPS)
WEAPONS TEST FACILITY
ELECTRONIC SECURITY SYSTEM DETAILS

SCALE: AS NOTED
EPROJECT NO.: 1783999
CONSTR. CONTR. NO.
NAVFAC DRAWING NO.
12931141
SHEET 387 OF 427
TY501
DRAWFORM REVISION: 14 SEPTEMBER 2023

7/3/2025 1:57:06 PM TY501
Autodesk Docs://23189.00 - P-1419 CPS WT Facility/BLDG-P1419-1783999-T_v24.rvt

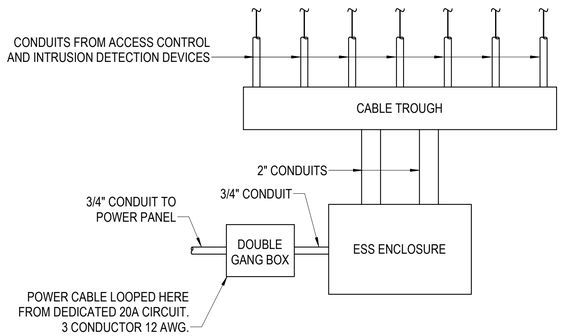

C1 ESS CONNECTION DIAGRAM

SCALE: NTS

SYM	DESCRIPTION	DATE	APPR

NAVFAC

REGISTERED COMMUNICATIONS DISTRIBUTION DESIGNER
DONALD R SELLERS
REG. NO. 110645
EXPIRES 12-31-2025
RCDD
SEAL

BAMFORTH
ENGINEERS + SURVEYORS

A/E INFO

APPROVED
CAPT Jason E. Jones, P.E.
FOR COMMANDER NAVFAC

ACTIVITY
APPROVED BY
LCDR VINCE DEL GRECO, FEAD
PWD YORKTOWN, VA, VIA EMAIL
SATISFACTORY TO DATE 06/12/2025

DES MES	DRW MES	CHK DRS	
PM/DM			RY / KJY
BRANCH MANAGER			WRB
CHIEF ENG/ARCH			JWJ
FIRE PROTECTION			HPN

DEPARTMENT OF THE NAVY
NAVAL FACILITIES ENGINEERING SYSTEMS COMMAND
MIDLANT DC CORE
NAVAL FACILITIES ENGINEERING SYSTEMS COMMAND - MID-ATLANTIC
NORFOLK, VA
NAVAL WEAPONS STATION
YORKTOWN, VIRGINIA
P-1419 CONVENTIONAL PROMPT STRIKE (CPS)
WEAPONS TEST FACILITY
RISER DIAGRAM

SCALE: AS NOTED
EPROJECT NO.: 1783999
CONSTR. CONTR. NO.
NAVFAC DRAWING NO.
12931142
SHEET 388 OF 427

TY601

DRAW/FORM REVISION: 14 SEPTEMBER 2023

7/3/2025 1:57:06 PM TY601
Autodesk Docs://23189.00 - P-1419 CPS WT Facility/BLDG-P1419-1783999-T_v24.rvt