United States Department of Agriculture
Forest Service

WYOMING
TETON COUNTY
R04 INTERMOUNTAIN REGION
CARIBOU-TARGHEE NATIONAL FOREST
TETON BASIN RANGER DISTRICT

DARBY CANYON PRECAST SINGLE VAULT TOILET

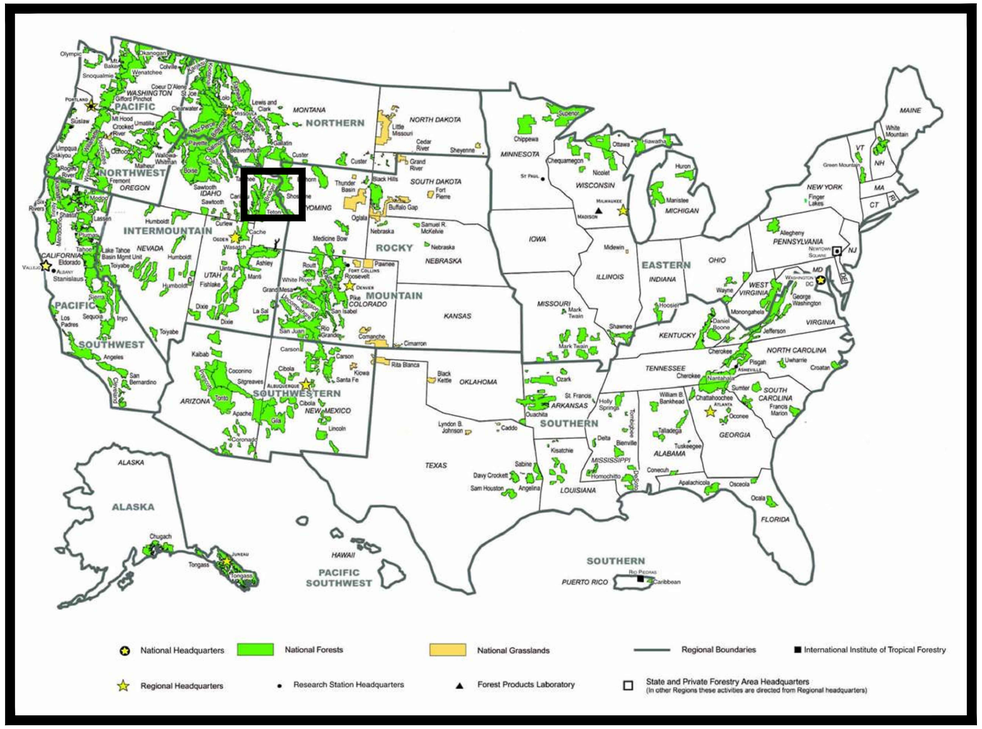

FOREST LOCATION MAP

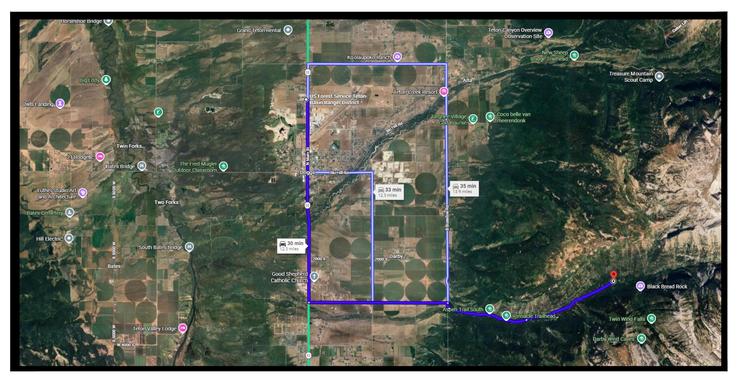

PROJECT LOCATION MAP

TRAVEL DIRECTIONS:

FROM TETON BASIN RANGER DISTRICT OFFICE, TRAVELSOUTH ON STATE HIGHWAY 33 TOWARD DRIGGS FOR APPROXIMATELY 5 MILES. TURN LEFT ONTO W 3000 S FOR 3.2 MILES. TURN RIGHT ONTO S STATELINE RD FOR 0.1 MILES. CONTINUE ONTO DARBY CANYON ROAD FOR 1.9 MILES. TURN LEFT TO STAY ON DARBY CANYON ROAD FOR 2.5 MILES TO DARBY CANYON PARKING, ALTA, WYOMING 83414.
43.6865°N, -110.9691°W

INDEX OF SHEETS

SHEET	SHEET TITLE	PAGE
G-01	COVERSHEET	1
C-01	BUILDING ELEVATIONS	2
C-02	INTERIOR ELEVATIONS	3
C-03	FLOOR PLAN	4
C-04	VAULT INSTALLATION	5

RECOMMENDED BY:

Digitally signed by JAY PENCE
Date: 2026.02.02 11:20:43 -07'00'

DISTRICT RANGER

APPROVED:

STEVEN JENKINS Digitally signed by STEVEN JENKINS
Date: 2026.02.02 10:39:14 -07'00'

FOREST ENGINEER

1/30/26 12:42 NINIANDERSON C:\USERS\NINIANDERSON\BOX\01. NINI.ANDERSON WORKSPACE\ENGINEERING DESIGN\DARBY CANYON SINGLE VAULT\SINGLE VAULT TOILET.DWG;

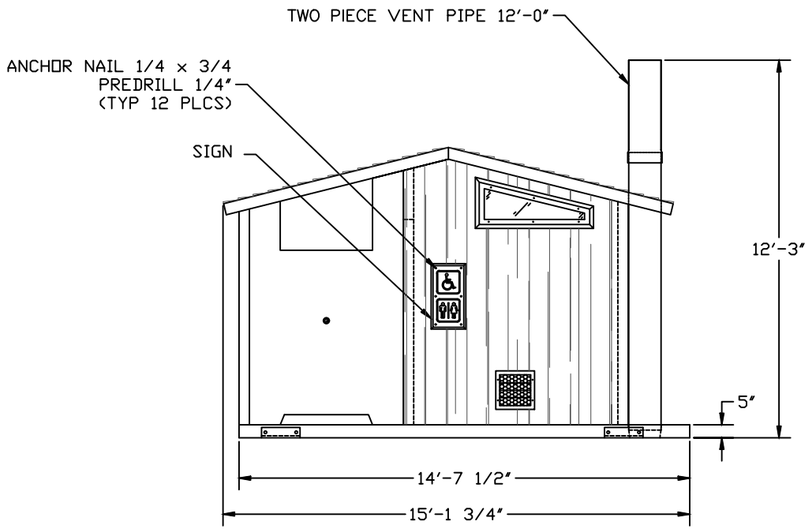

FRONT ELEVATION

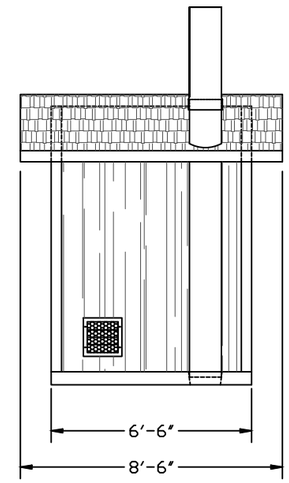

RIGHT SIDE ELEVATION

MATERIALS

ITEM	QTY
SIGNS	2
VENT PIPE 9'-0"	1
ANCHOR NAIL 1/4x3/4	12
VENT PIPE 3'-0"	1

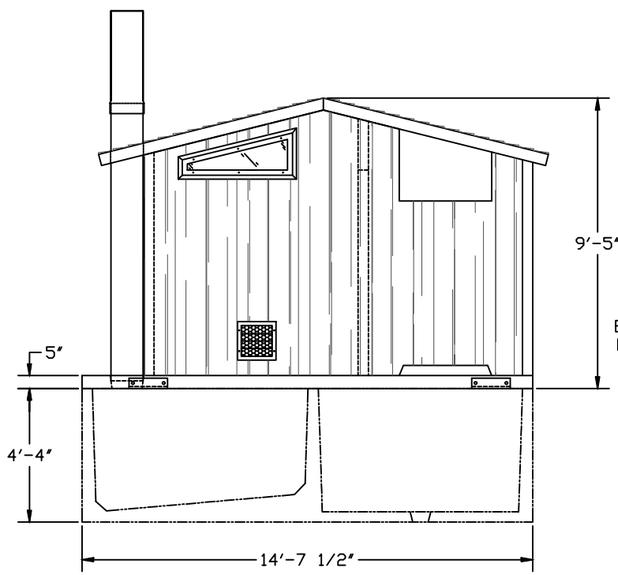

REAR ELEVATION

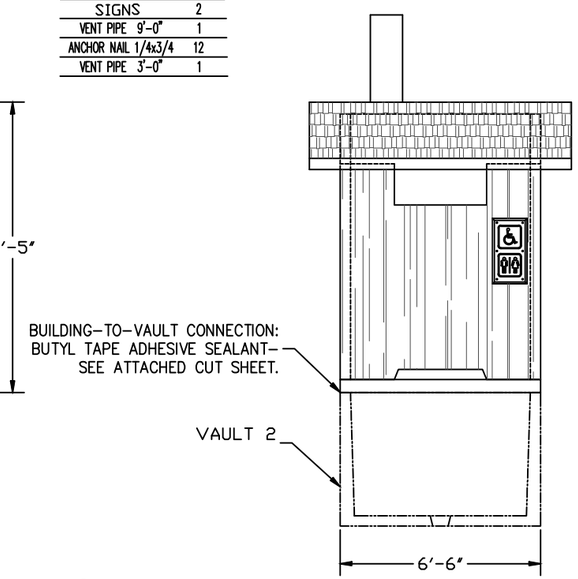

LEFT SIDE ELEVATION

FOR
REFERENCE
ONLY
NOT TO SCALE

United States Department of Agriculture
Forest Service

R04
INTERMOUNTAIN REGION

STAMPS, LOGOS, AND SEALS

NO.	REVISION / ISSUE	DATE
4		
3		
2		
1		

PROJECT NAME

DARBY CANYON PRECAST SINGLE VAULT TOILET

CARIBOU-TARGHEE NATIONAL FOREST

TETON BASIN RANGER DISTRICT

DRAWING TITLE

BUILDING ELEVATIONS

DATE 01/26/2026	ARCHIVE NO.
DESIGNER N. ANDERSON	DRAWING SHEET NO. C-01
DRAWN N. ANDERSON	
CHECKED S. JENKINS	
PROJECT NO.	SHEET 02 OF 05

1/30/26 12:42 NINIANDERSON C:\USERS\NINIANDERSON\BOX\01. NINI.ANDERSON WORKSPACE\ENGINEERING DESIGN\DARBY CANYON SINGLE VAULT\SINGLE VAULT TOILET.DWG;

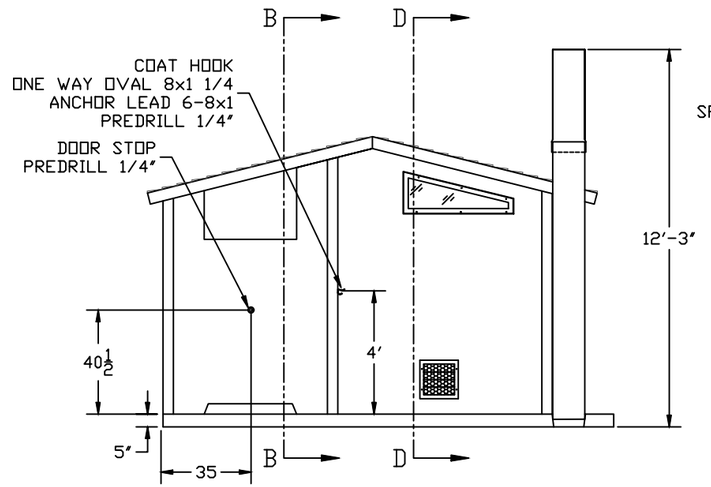

SECTION A – A

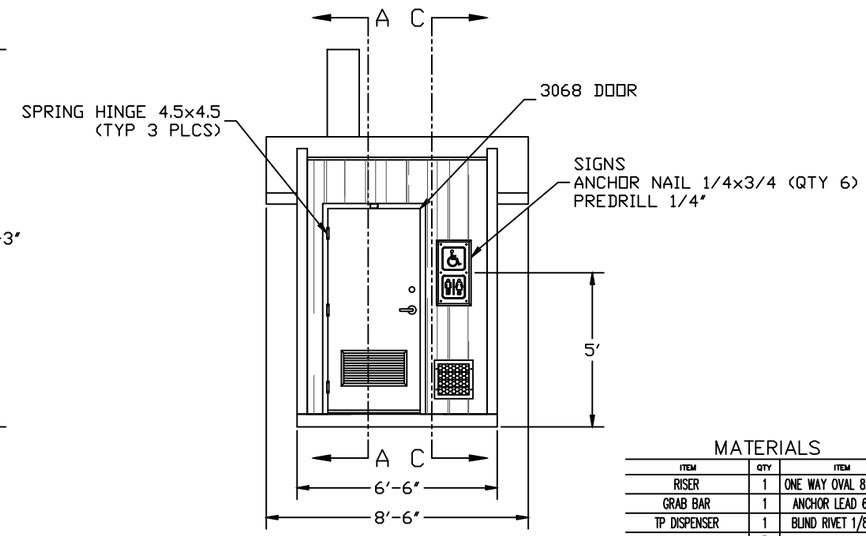

SECTION B – B

MATERIALS

ITEM	QTY	ITEM	QTY
RISER	1	ONE WAY OVAL 8x1 1/4	2
GRAB BAR	1	ANCHOR LEAD 6-8x1	2
TP DISPENSER	1	BLIND RIVET 1/8x1/4	2
TOILET PAPER ROLL	3	3068 DOOR ASSEMBLY	1
COAT HOOK	1	SPRING HINGE 4.5x4.5	3
DOOR STOP	1		
DOOR SIGNS	1		
SIGN	1		
ANCHOR NAIL 1/4x1	6		
ANCHOR NAIL 1/4x3/4	10		
ANCHOR NAIL 3/16x7/8	9		

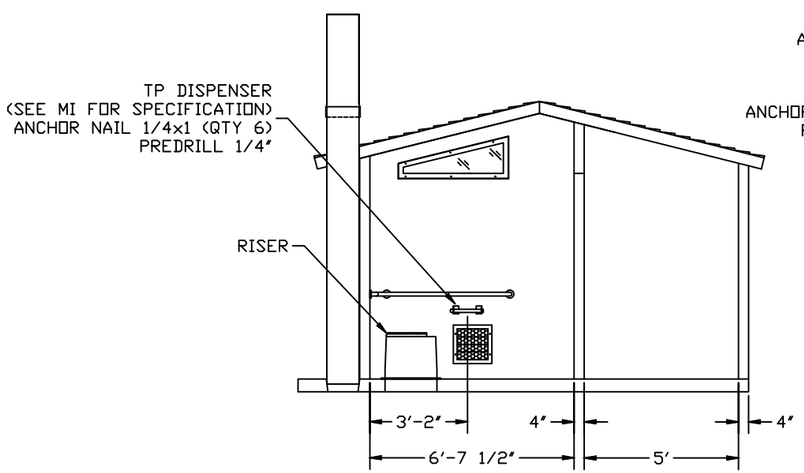

SECTION C – C

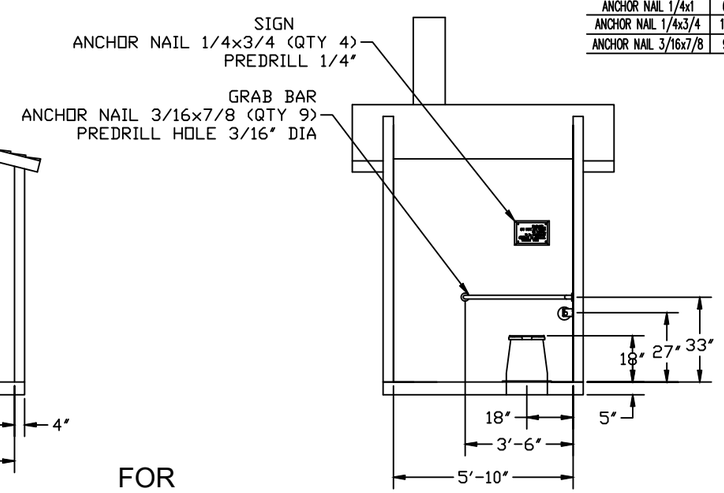

SECTION D – D

FOR
REFERENCE
ONLY
NOT TO SCALE

USDA FOREST SERVICE

United States Department of Agriculture
Forest Service

R04
INTERMOUNTAIN REGION

STAMPS, LOGOS, AND SEALS

NO.	REVISION / ISSUE	DATE
4		
3		
2		
1		

PROJECT NAME

DARBY CANYON PRECAST SINGLE VAULT TOILET

CARIBOU-TARGHEE NATIONAL FOREST

TETON BASIN RANGER DISTRICT

DRAWING TITLE

INTERIOR ELEVATIONS

DATE 01/26/2026
ARCHIVE NO.
DESIGNER N. ANDERSON
DRAWN N. ANDERSON
CHECKED S. JENKINS
PROJECT NO.
DRAWING SHEET NO. **C-02**
SHEET 03 OF 05

1/30/26 12:42 NINIANDERSON C:\USERS\NINIANDERSON\BOX\01. NINI.ANDERSON WORKSPACE\ENGINEERING DESIGN\DARBY CANYON SINGLE VAULT\SINGLE VAULT TOILET.DWG;

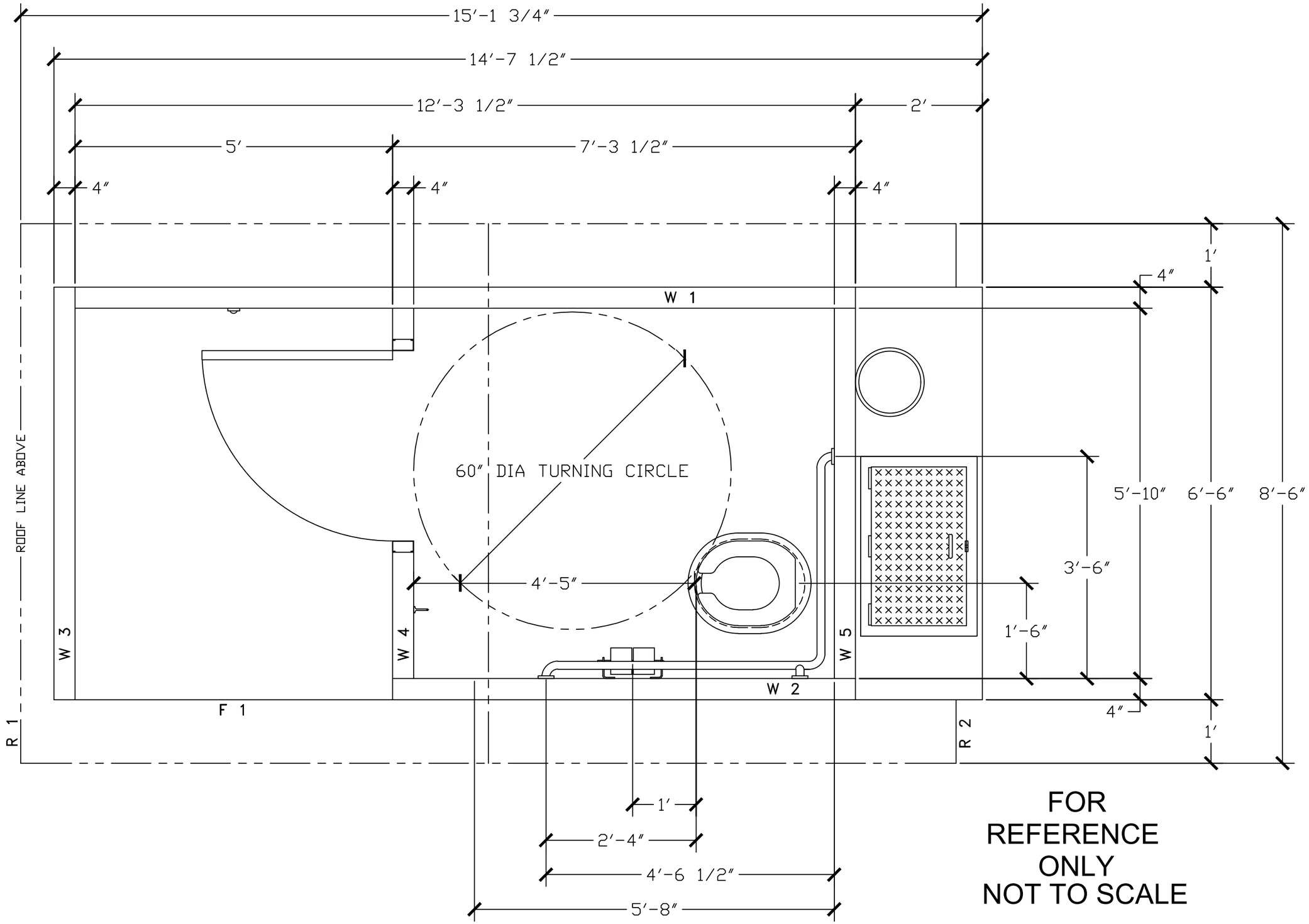

FOR REFERENCE ONLY
NOT TO SCALE

USDA FOREST SERVICE

United States Department of Agriculture
Forest Service

R04
INTERMOUNTAIN REGION

STAMPS, LOGOS, AND SEALS

NO.	REVISION / ISSUE	DATE
4		
3		
2		
1		

PROJECT NAME

DARBY CANYON PRECAST SINGLE VAULT TOILET

CARIBOU-TARGHEE NATIONAL FOREST

TETON BASIN RANGER DISTRICT

DRAWING TITLE

FLOOR PLAN

DATE 01/26/2026	ARCHIVE NO.
DESIGNER N. ANDERSON	DRAWING SHEET NO. C-03
DRAWN N. ANDERSON	
CHECKED S. JENKINS	
PROJECT NO.	SHEET 04 OF 05

1/30/26 12:42 NINIANDERSON C:\USERS\NINIANDERSON\BOX001, NINI.ANDERSON WORKSPACE\ENGINEERING DESIGN\DARBY CANYON SINGLE VAULT\SINGLE VAULT TOILET.DWG;

Approximate VAULT WEIGHT 16,800 LBS
Approximate BUILDING WEIGHT 25,875 LBS

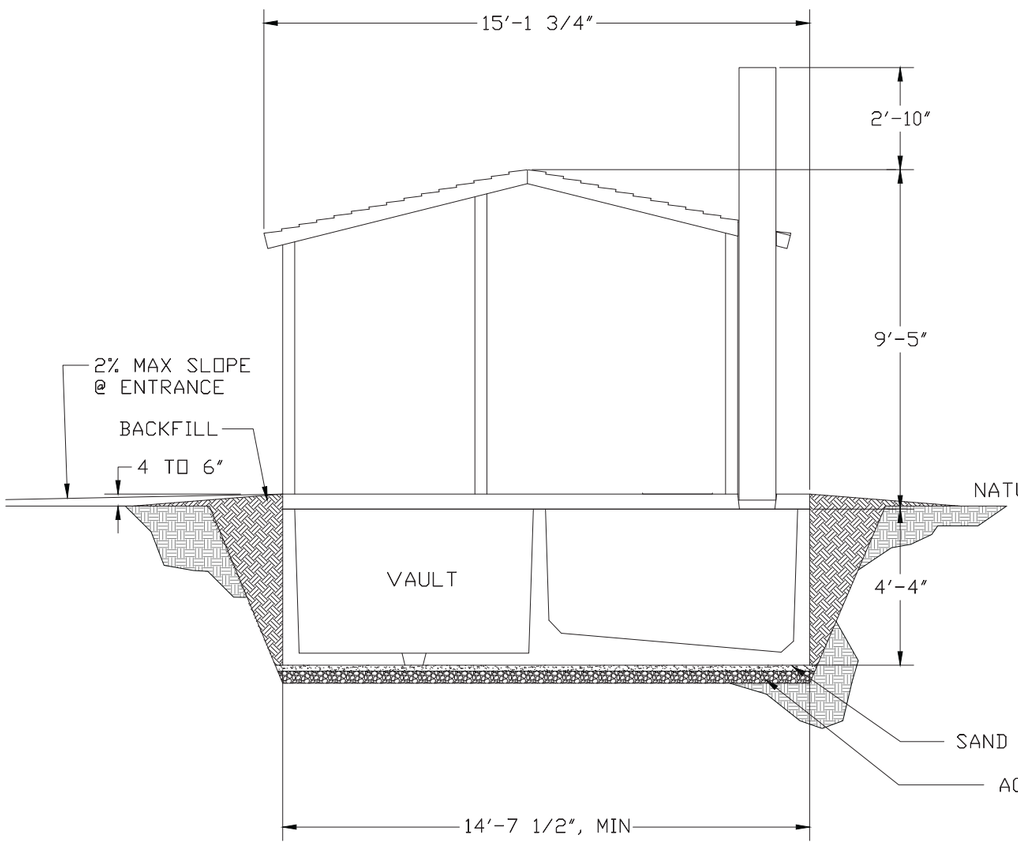

FRONT ELEVATION

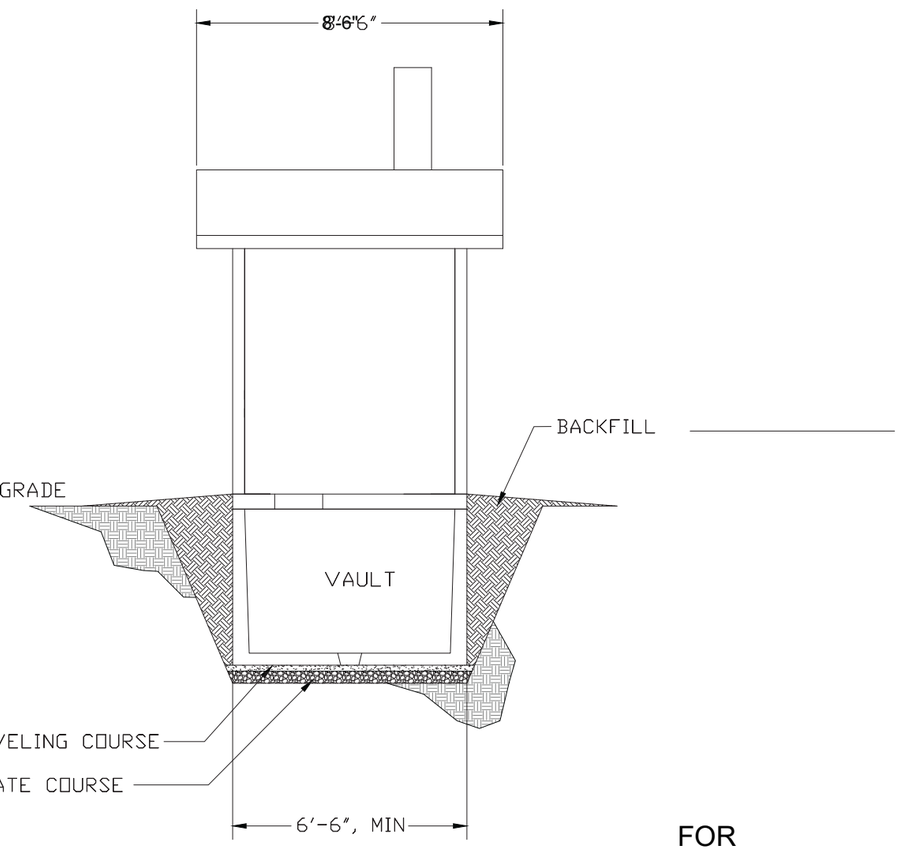

SIDE ELEVATION

FOR
REFERENCE
ONLY
NOT TO SCALE

United States Department of Agriculture
Forest Service

R04
INTERMOUNTAIN REGION

STAMPS, LOGOS, AND SEALS

NO.	REVISION / ISSUE	DATE
4		
3		
2		
1		

PROJECT NAME

DARBY CANYON PRECAST SINGLE VAULT TOILET

CARIBOU-TARGHEE NATIONAL FOREST

TETON BASIN RANGER DISTRICT

DRAWING TITLE

VAULT INSTALLATION

DATE 01/26/2026	ARCHIVE NO.
DESIGNER N. ANDERSON	DRAWING SHEET NO. C-04
DRAWN N. ANDERSON	
CHECKED S. JENKINS	
PROJECT NO.	SHEET 05 OF 05

1/30/26 12:42 NINIANDERSON C:\USERS\NINIANDERSON\BOX\01. NINI.ANDERSON WORKSPACE\ENGINEERING DESIGN\DARBY CANYON SINGLE VAULT\SINGLE VAULT TOILET.DWG;