CILITIES MANAGEMENT
, SOUTH DAKOTA
STATION DESIGN
T NO. GP24RB401H02

SHEET INDEX	
SHEET NUMBER	SHEET TITLE
1	COVER
2	NOTES AND LEGEND
3	SITE PLAN
4	PROPOSED LIFT STATION PLAN
5	CONNECTING EX. MH TO PROP. LIFT STATION PLAN AND PROFILE
6	DEMOLITION OF EXISTING LIFT STATION
7	PROPOSED LIFT STATION PLAN-VIEW
8	PROPOSED LIFT STATION SECTION-VIEW
9	LIFT STATION DETAILS
10	LIFT STATION DETAILS
11	LIFT STATION DETAILS
12	FENCE DETAILS

INDIAN
TION

CATION MAP

DATE	REVISIONS	INIT.

GREAT PLAINS AREA INDIAN HEALTH SERVICE
OFFICE OF ENVIRONMENTAL
HEALTH & ENGINEERING

DIVISION OF FACILITIES MANAGEMENT
115 4TH AVE SE; FEDERAL BUILDING RM 309
ABERDEEN, SD 57401
(605) 226-7451

INDIAN HEALTH SERVICE 1955

NAME: GP24RB401H02_SHT_COVER
NAME: COVER
NG: C. SAWATZKY, SCALE: NTS

USER: lgayton FILE: S:\OEHE\DFM\1 projects\1 locations\(rb) rosebud\gp24rb401h02 lift station design\DESIGN\2_design-plans-specs\drawings-plans-concepts\CAD\GP24RB401H02_SHT_Notes&Legend.dwg

GENERAL NOTES

1. THE UTILITIES SHOWN IN PLAN AND PROFILE ARE INDICATED IN ACCORDANCE WITH AVAILABLE RECORDS. (ALL UTILITIES MAY NOT BE SHOWN.) THE CONTRACTOR SHALL BE RESPONSIBLE FOR OBTAINING EXACT LOCATIONS AND ELEVATIONS OF ALL UTILITIES FROM THE OWNERS OF RESPECTIVE UTILITIES. ALL UTILITIES SHALL BE NOTIFIED AT LEAST 72 HOURS PRIOR TO EXCAVATION.
2. ALL MINOR OBSTRUCTIONS MAY NOT BE SHOWN ON PLANS. THE CONTRACTOR SHALL VISIT THE SITE AND DETERMINE THE ACTUAL CONDITIONS WITH REGARD TO THE EXISTENCE OF FENCES, DRIVEWAYS, TREES, SIDEWALKS, CULVERTS, UTILITIES AND OTHER MISCELLANEOUS OBSTACLES THAT MAY INTERFERE WITH CONSTRUCTION PRIOR TO SUBMITTING BIDS.
3. EXISTING WATER MAIN IS 6" PVC.
4. COMPACTION REQUIREMENTS FOR MAINS & SERVICE LINES INSTALLED IN THE PROPOSED ROADWAY MUST MEET ROAD RESTORATION REQUIREMENTS. (SEE SECTION 02705)
5. PROTECT OR RESTORE ALL LOT CORNERS.
6. SYMBOLS ON THE DRAWINGS (BECAUSE OF THEIR SIZE) MAY NOT REPRESENT THE EXACT LOCATION OF EITHER PROPOSED OR EXISTING UTILITIES. (EX. GATE VALVES & HYDRANTS)
7. SURVEY INFORMATION WAS OBTAINED UTILIZING A TRIMBLE SATELLITE SURVEY UNIT AND HAS +/- 3 FT ACCURACY. CONTRACTOR TO UTILIZE AT THEIR OWN RISK.

LEGEND

PROPOSED		EXISTING
	SEWER	
S	SEWER MAIN	S
SSL	SEWER SERVICE LINE	SSL
SFM	SEWER FORCE MAIN	SFM
SFSL	SEWER FORCE SERVICE LINE	SFSL
	SEWER MANHOLES	
	ONE-WAY CLEANOUT	
	TWO-WAY CLEANOUT	
	SEPTIC TANK	
	LIFT STATION	
	DIRECTION OF FLOW	
	WATER	
W	WATER MAIN	W
WSL	WATER SERVICE LINE	WSL
	GATE VALVES	
	FIRE HYDRANT W/VALVE	
	FLUSH HYDRANT W/VALVE	
	AIR RELEASE/VACUUM VALVE	
	SADDLE W/CORPORATION STOP	
	CURB STOP W/BOX	
	INDIVIDUAL PRESSURE RELEASE VALVE	
	YARD HYDRANT	
M	METER PIT/BOX	M
PT	IN-GROUND PRESSURE TANK	PT
W	WELL	W

GENERAL
BENCHMARK
IRON PIN
CARSONITE MARKER
CONTOUR LINE
CULVERT
DIRECTIONAL DRILLING
FENCE
FIBER OPTIC
GAS, ELECTRIC, TELEPHONE
LIGHT POLE
INSULATION
POWER POLE
PROPANE TANK
PROPERTY LINE
RIGHT-OF-WAY
ROAD (DIRT/GRAVEL)
ROAD (PAVED)
ROAD BORING/CROSSING
SIGN
SOIL BORING
SWAMP
TELEPHONE PED
TRACING WIRE BOX
TREE LINE
TREE
RIP RAP
CONTROL POINT
ELECTRIC PED
GUY / ANCHOR
MONUMENT
MONITORING WELL
TEMPORARY BENCHMARK
CATV PEDESTALS
OVERHEAD POWER
STORM WATER INLET MANHOLE
CHAINLINK FENCE
UNDERGROUND CABLE

UTILITIES

ONE CALL (SOUTH DAKOTA)
TELE: 811 (IN-STATE) OR
800-781-7474
(OUTSIDE OF SOUTH DAKOTA)

TELEPHONE:
GOLDEN WEST
804 EAST SECOND STREET
MISSION, SD 57555
TELE: 1-855-888-7777

ELECTRIC:
CHERRY TODD ELECTRIC CO-OP
625 WEST 2ND STREET
MISSION, SD 57555
TELE: (605) 856-4417

WATER AND SEWER SYSTEM:
INDIAN HEALTH SERVICE
400 SOLDIER CREEK ROAD
ROSEBUD, SD 57570
TELE: 605-747-2231

SOLID WASTE:
TAMMY YOUNG-BARRON
RST SOLID WASTE
400 WEST FRONTAGE ROAD
ROSEBUD, SD 57570
TELE: 605-747-2424

CONTACTS

ENGINEERING:

INDIAN HEALTH SERVICE
OFFICE LOCATION
3200 CANYON LAKE DRIVE
RAPID CITY, SD 57702
LOGAN GAYTON, GENERAL ENGINEER
TELE: 605-355-2500
TELE: 605-945-5451

CONTACTS (CONT.)

TECRO
MAURIAL FAST HORSE
306 BUFFALO PASS LANE
ROSEBUD, SD 57570
TELE: 605-828-2434

THPO
IONE QUIGLEY
PO BOX 750
ROSEBUD, SD 57570
TELE: 605-747-4211

RST ENVIRONMENTAL PROTECTION OFFICE (EPO)
IVAN CROW EAGLE
PO BOX 428
ROSEBUD, SD 57570
TELE: 605-747-2933

DATE	REVISIONS	INIT.

GREAT PLAINS AREA INDIAN HEALTH SERVICE
OFFICE OF ENVIRONMENTAL HEALTH & ENGINEERING

DIVISION OF FACILITIES MANAGEMENT
115 4TH AVE SE; FEDERAL BUILDING RM 309
ABERDEEN, SD 57401
(605) 226-7451

NOTES & LEGEND
ROSEBUD, SOUTH DAKOTA
RB LIFT STATION REPLACEMENT
GP24RB401H02

DRAWN BY: L. GAYTON, EI
CHECKED BY: C. SAWATZKY, PE
APPROVED BY: C. SAWATZKY, PE
FILE NAME: GP24RB401H02_SHT_NOTES&LEGEND
LAYOUT NAME: NOTES & LEGEND
PROJ ENG: C. SAWATZKY, PE
SCALE: 1"=1"

SITE PLAN

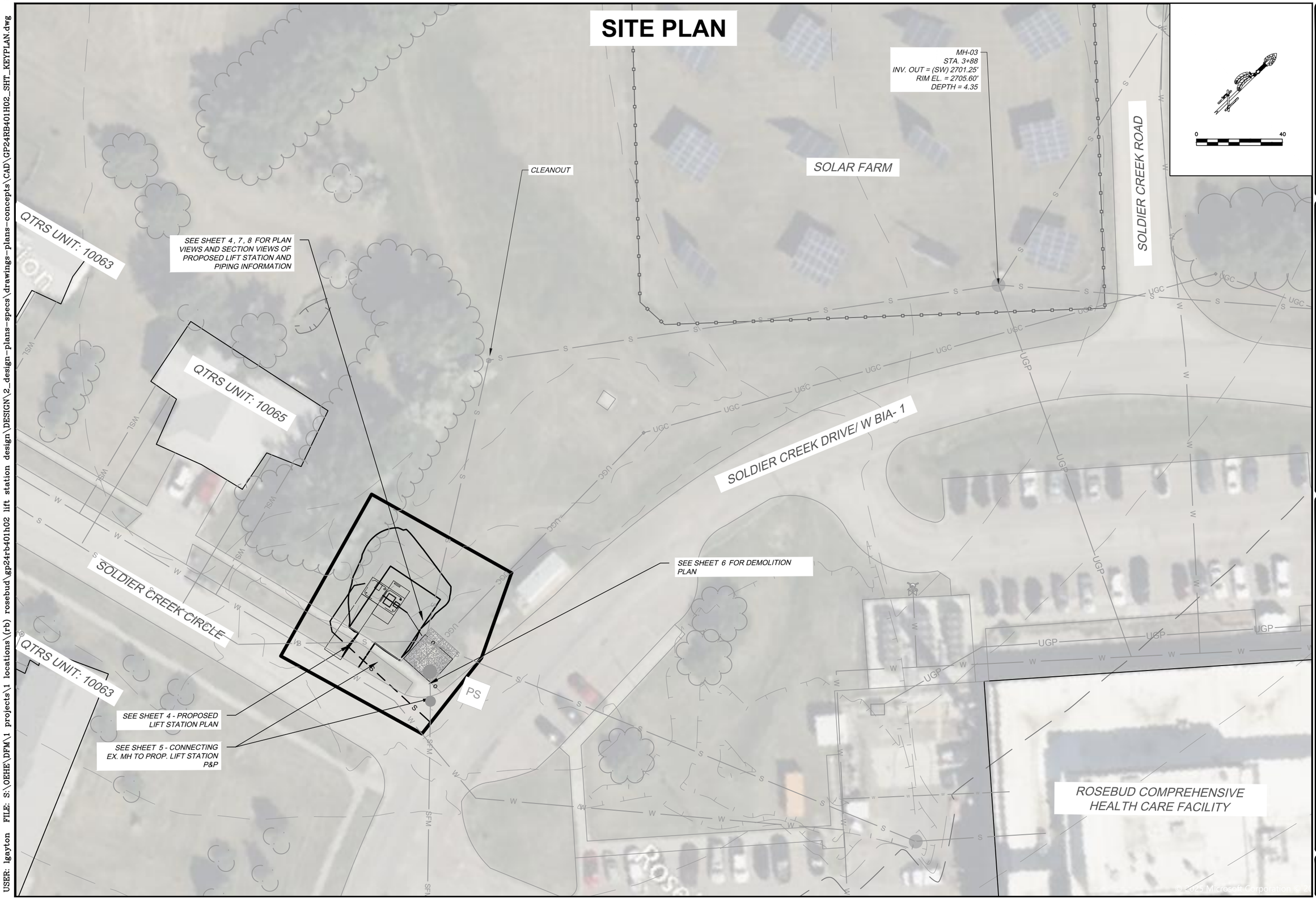

DATE	REVISIONS	INIT.

GREAT PLAINS AREA INDIAN HEALTH SERVICE
OFFICE OF ENVIRONMENTAL HEALTH & ENGINEERING

DIVISION OF FACILITIES MANAGEMENT
115 4TH AVE SE; FEDERAL BUILDING RM 309
ABERDEEN, SD 57401
(605) 226-7451

INDIAN HEALTH SERVICE 1955

SITE PLAN
ROSEBUD, SOUTH DAKOTA
RB LIFT STATION DESIGN
GP24RB401H02

DRAWN BY: L. GAYTON, EI
FILE NAME: GP24RB401H02_SHT_KEYPLAN
CHECKED BY: C. SAWATZKY, PE
LAYOUT NAME: KEY PLAN
APPROVED BY: C. SAWATZKY, PE
PROJ ENG: C. SAWATZKY, PE
SCALE: 1"=40'

SHEET 3 OF 12

USER: lgayton FILE: S:\OEHE\DFM\1 projects\1 locations\(rb) rosebud\gp24rb401h02 lift station design\DESIGN\2_design-plans-specs\drawings-plans-concepts\CAD\GP24RB401H02_SHT_KEYPLAN.dwg 11/21/

PROPOSED LIFT STATION PLAN

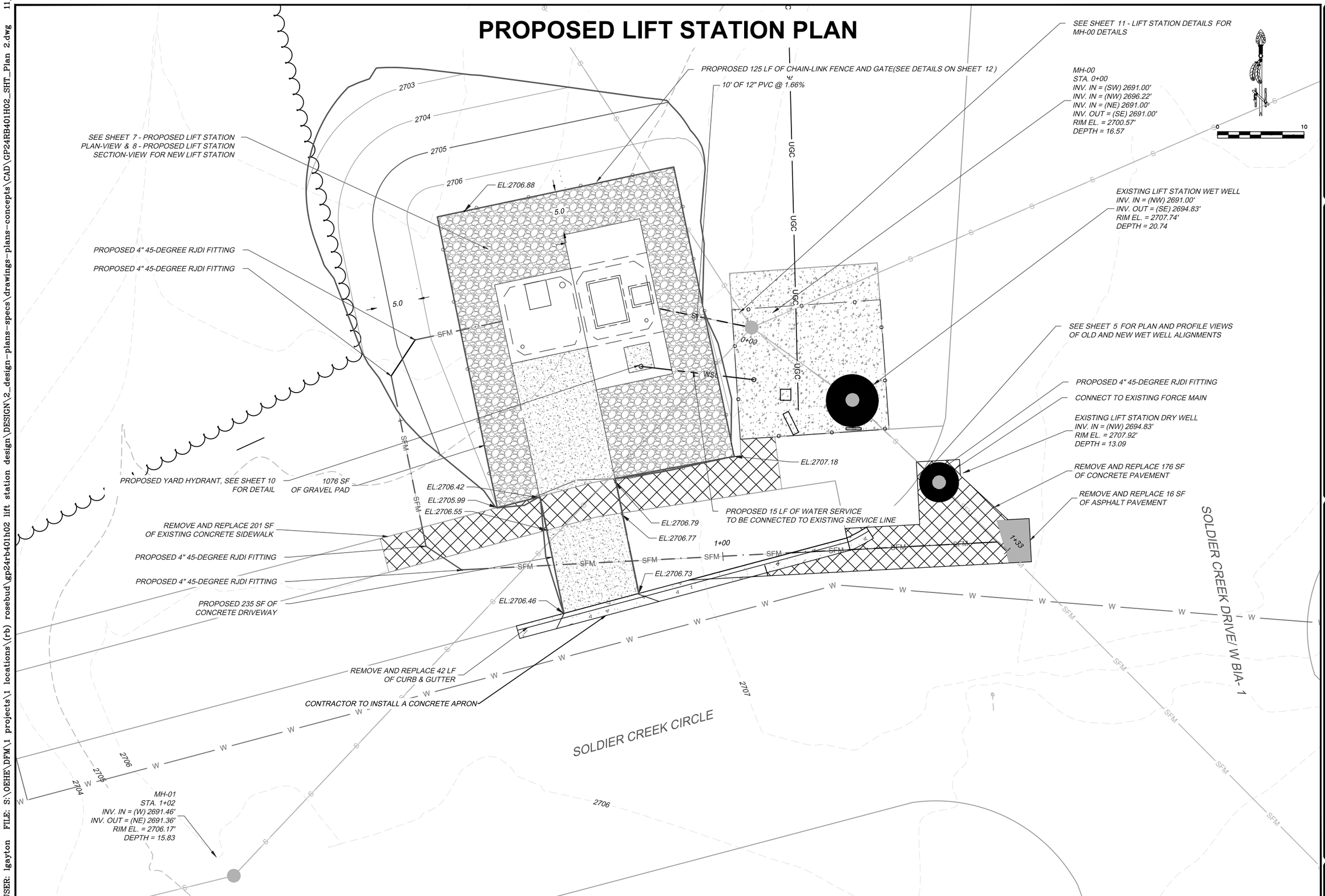

DATE	REVISIONS	INIT.

GREAT PLAINS AREA INDIAN HEALTH SERVICE
OFFICE OF ENVIRONMENTAL HEALTH & ENGINEERING

DIVISION OF FACILITIES MANAGEMENT
115 4TH AVE SE; FEDERAL BUILDING RM 309
ABERDEEN, SD 57401
(605) 226-7451

PROPOSED LIFT STATION PLAN
ROSEBUD, SOUTH DAKOTA
RB LIFT STATION REPLACEMENT
GB24RB401H02

DRAWN BY: L. GAYTON, EI
FILE NAME: GP24RB401H02_SHT_PLAN 2
CHECKED BY: C. SAWATZKY, PE
LAYOUT NAME: PROPOSED LIFT STATION PLAN
APPROVED BY: C. SAWATZKY, PE
PROJ ENG: C. SAWATZKY, PE
SCALE: 1"=10'

SHEET 4 OF 12

USER: lgayton FILE: S:\OEHE\DFM\1 projects\1 locations\(rb) rosebud\gp24rb401h02 lift station design\DESIGN\2_design-plans-specs\drawings-plans-concepts\CAD\GP24RB401H02_SHT_Plan 2.dwg 11/21/2

CONNECTING EXISTING MH TO PROPOSED WET WELL PLAN AND PROFILE

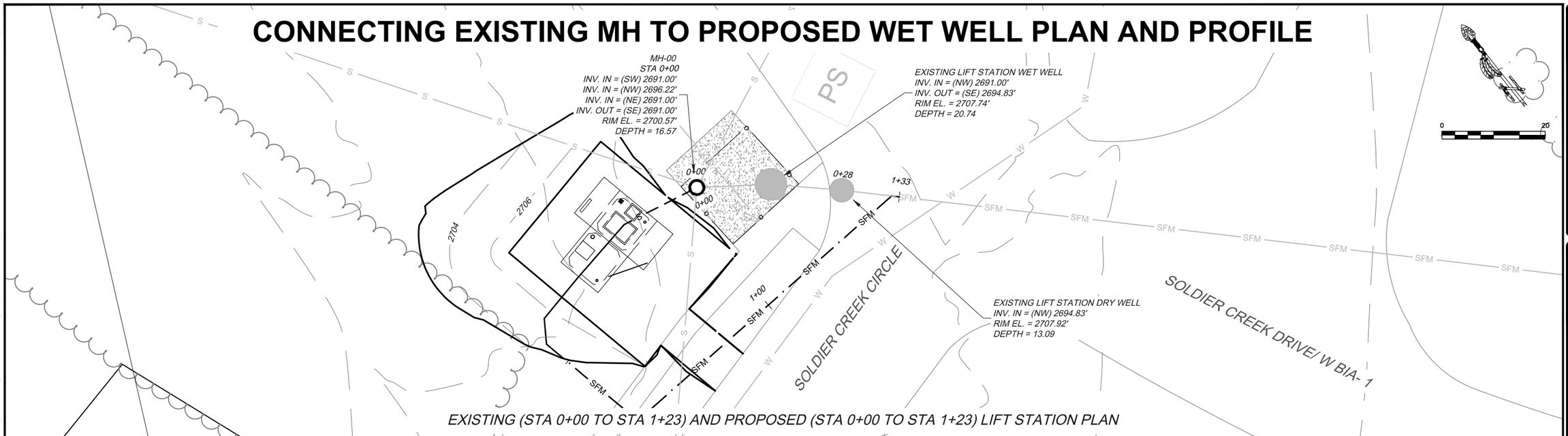

EXISTING (STA 0+00 TO STA 1+23) AND PROPOSED (STA 0+00 TO STA 1+23) LIFT STATION PLAN

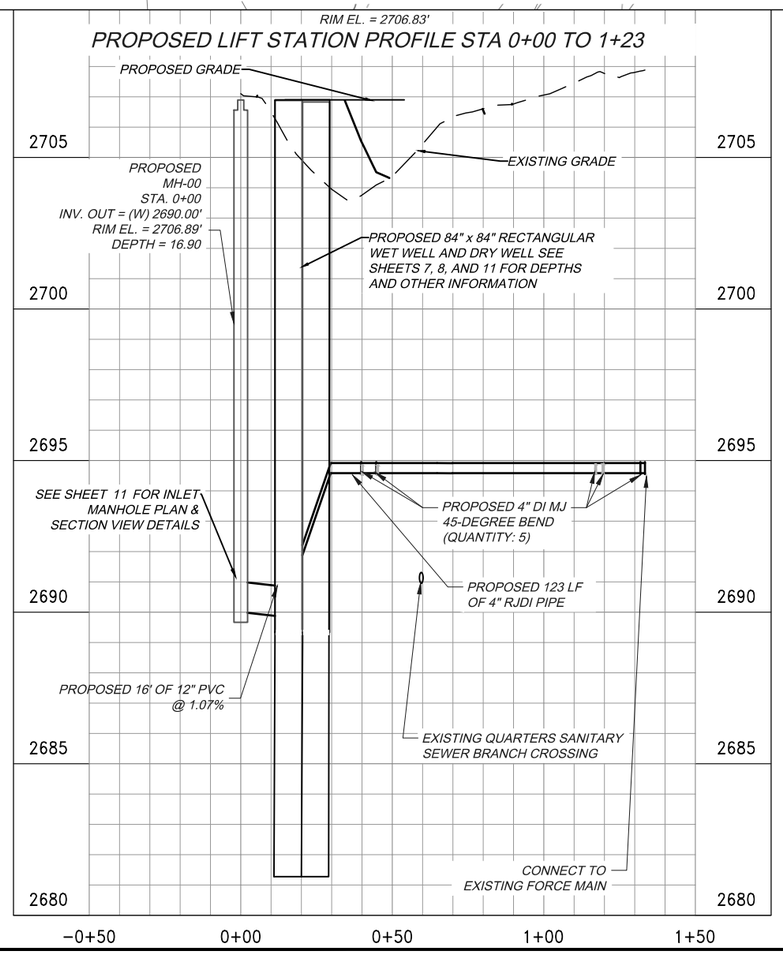

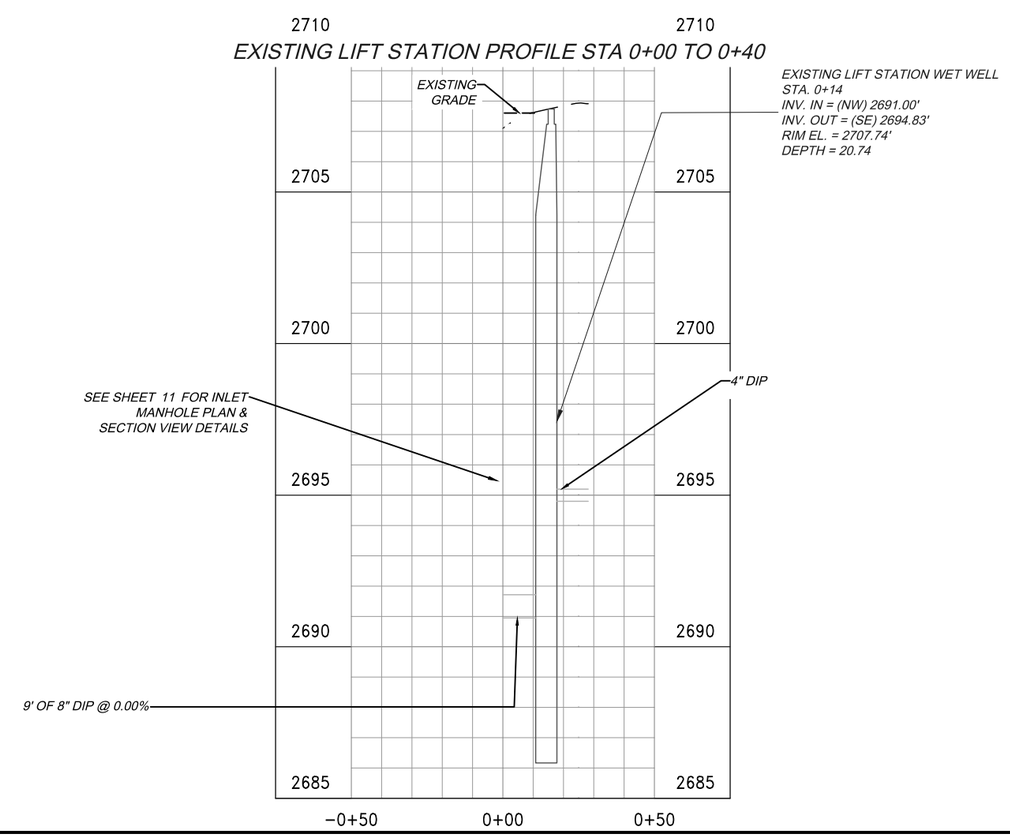

REVISIONS		
DATE		INIT.

GREAT PLAINS AREA INDIAN HEALTH SERVICE
OFFICE OF ENVIRONMENTAL
HEALTH & ENGINEERING

DIVISION OF FACILITIES MANAGEMENT
115 4TH AVE. SE: FEDERAL BUILDING ROOM 309
ABERDEEN, SD 57401
(605)226-7451

CONNECTING EX. MH TO PROP. LIFT STATION P&P
ROSEBUD, SOUTH DAKOTA
RB LIFT STATION REPLACEMENT
GP24RB401H02

DRAWN BY: L.GAYTON, EI
FILE NAME: GP24RB401H02_SHT_PLAN 1
CHECKED BY: C. SAWATZKY, PE
LAYOUT NAME: 8_EX WET WELL
APPROVED BY: C. SAWATZKY, PE
PROJ ENG: C. SAWATZKY, SCALE: 1"=20'

SHEET 5 OF 12

USER: lgayton FILE: S:\OEHE\DFM\1 projects\1 locations\(rb) rosebud\gp24rb401h02 lift station design\DESIGN\2_design-plans-specs\drawings-plans-concepts\CAD\GP24RB401H02_SHT_Plan 1.dwg 11/21/2

DEMOLITION OF EXISTING LIFT STATION

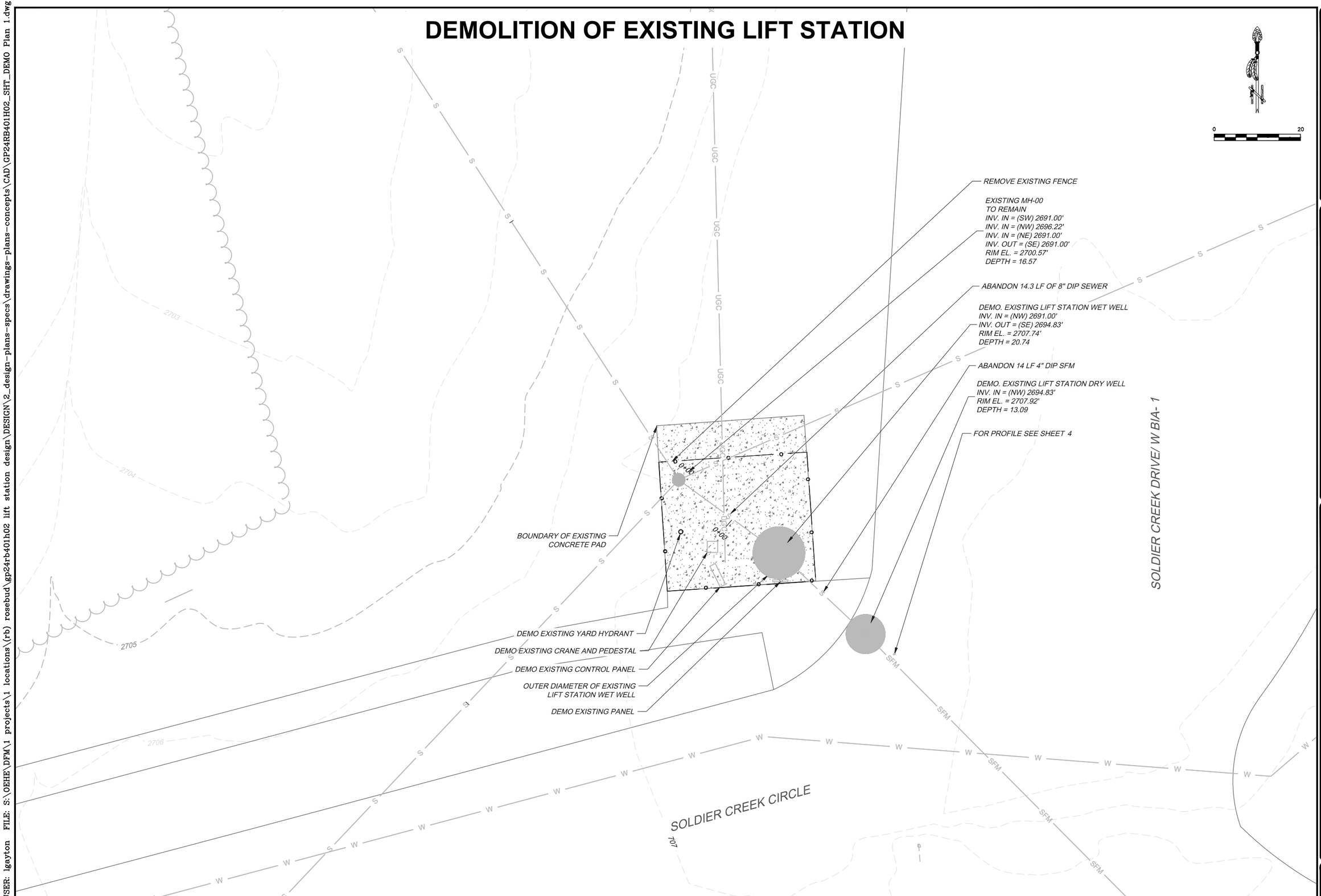

DATE	REVISIONS	INIT.

GREAT PLAINS AREA INDIAN HEALTH SERVICE
OFFICE OF ENVIRONMENTAL
HEALTH & ENGINEERING

DIVISION OF FACILITIES MANAGEMENT
115 4TH AVE SE; FEDERAL BUILDING RM 309
ABERDEEN, SD 57401
(605) 226-7451

DEMOLITION OF EXISTING LIFT STATION
ROSEBUD, SOUTH DAKOTA
RB LIFT STATION REPLACEMENT
GP24RB401H02

DRAWN BY: L. GAYTON, EI
FILE NAME: GP24RB401H02_SHT_DEMO PLAN 1
CHECKED BY: C. SAWATZKY, PE
LAYOUT NAME: DEMO OF EX. LIFT STATION
APPROVED BY: C. SAWATZKY, PE
PROJ ENG: C. SAWTAZKY SCALE: 1"=10'

SHEET 6 OF 12

USER: lgayton FILE: S:\OEHE\DFM\1 projects\1 locations\(rb) rosebud\gp24rb401h02 lift station design\DESIGN\2_design-plans-specs\drawings-plans-concepts\CAD\GP24RB401H02_SHT_DEMO Plan 1.dwg 1:

NOTES:
LIFT STATION SHOWN WITH TOP SLAB REMOVED.

INTERIOR OF CONCRETE WET WELL POLY LINED CONCRETE STRUCTURE. EXTERIOR TO BE COATED WITH APPROVED COAL TAR EPOXY COATING.

FACTORY COAT ALL DUCTILE IRON PIPE AND FITTINGS IN BOTH THE VALVE VAULT AND THE WET WELL WITH APPROVED FACTORY EPOXY COATING. PROVIDE S.S. WASHERS ON EITHER END OF FLANGED CONNECTIONS TO PROTECT COATING. DO NOT COAT S.S. WASHERS, NUTS AND BOLTS. CONTRACTOR HAS THE OPTION TO PROVIDE FLANGED HDPE PIPING WITH IN THE VAULT AS WELL.

ANY DAMAGE TO THE CONCRETE STRUCTURE INCLUDING SPALLED CONCRETE SHALL BE RESTORED/CORRECTED WITH CEMENT NON-SHRINK GROUT PER THE MANUFACTURERS RECOMMENDATIONS.

AREA INSIDE THE FENCE SHALL BE BUILT UP TO THE SUBGRADE ELEVATION 1637.25' WITH STRUCTURAL FILL, COVERED WITH POLY SHEETING AND THEN COVERED WITH 3" OF CRUSHED ROCK AS SPECIFIED TO A FINAL ELEVATION OF 1637.50'. CONCRETE PADS TO MATCH FINISHED ELEVATION OF LIFT STATION COVER. ALL SUBGRADE SHALL BE SLOPED TO DRAIN AWAY FROM ALL STRUCTURES.

SUMP PUMP DISCHARGE PIPE SHALL BE SUPPORTED BY WALL BRACKETS PER SPECIFICATIONS.

CONTRACTOR TO INSTALL NEW 200 AMP DISCONNECT AT THE PEDESTAL & CONNECT TO A NEW METER, DISCONNECT SHALL BE ABLE TO BE LOCKED TO PREVENT ACCESS. GETTING POWER TO THE SITE AND THE INSTALLATION OF THE NEW METER WILL BE PAID FOR BY THE TRIBE. THE CONTRACTOR SHALL COORDINATE THE INSTALLATION AND LOCATIONS OF THE METER WITH THE POWER COMPANY.

AREA WITHIN THE LANDSCAPE EDGING OF THE PROJECT SHALL CONSIST OF PIT-RUN GRAVEL FROM UNDISTURBED EARTH TO FINISHED SUBGRADE.

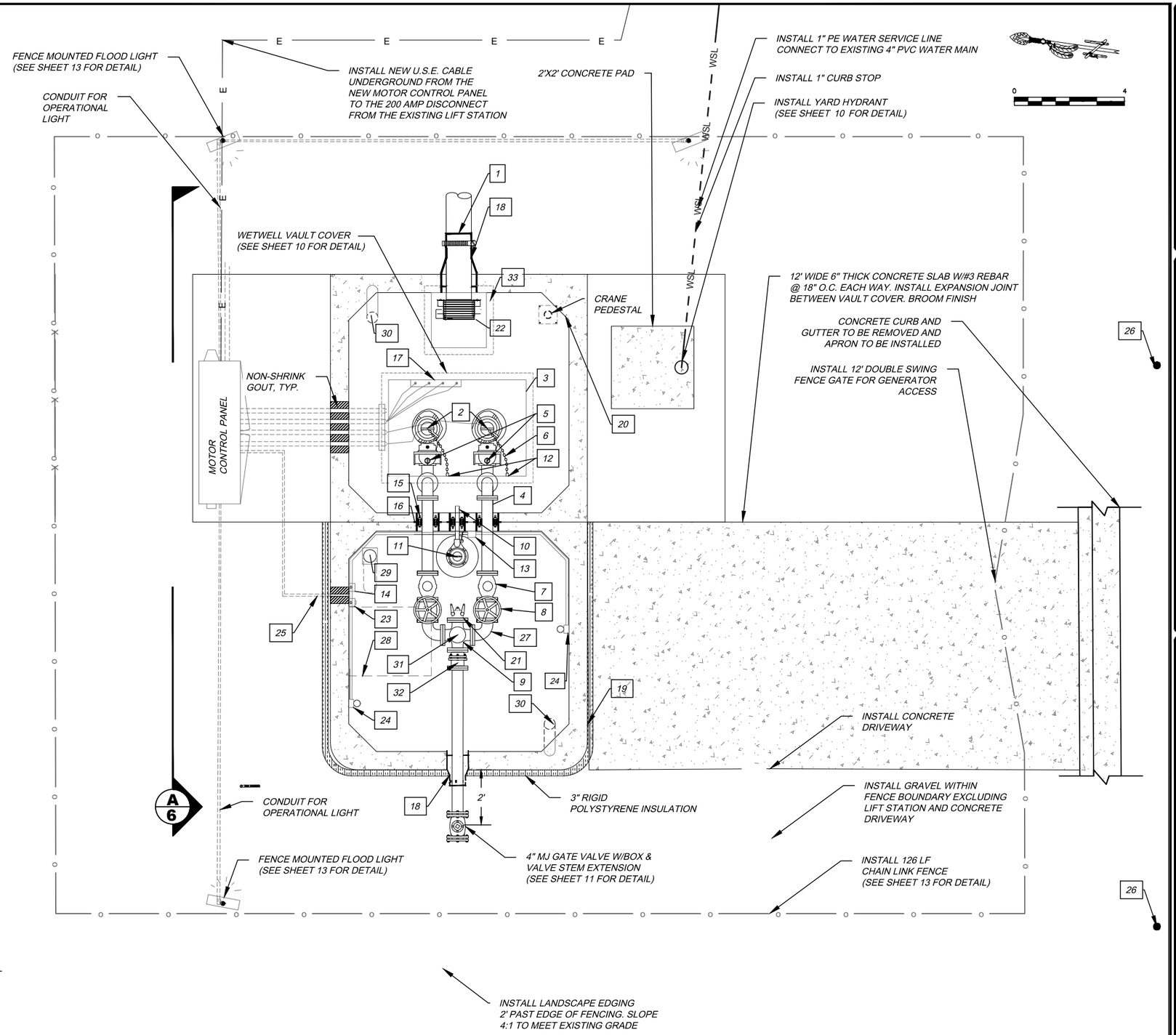

INDEX

1. 12-INCH DR-11 PVC PIPE
2. VAUGHAN V3V/V3VR SUBMERSIBLE SEWAGE CHOPPER PUMPS.
3. 42" x 60" ACCESS HATCH
4. 4-INCH CL52 D.I. PIPE FACTORY COATED WITH TNEMEC 431 EPOXY COATING SYSTEM OR EQUAL
5. 2-INCH S.S. PUMP GUIDE RAIL, CENTER OF RAIL 4.33" FROM CONCRETE EDGE BASED OF PUMP MANUFACTURERS DIMENSIONS.
6. S.S. CHAIN
7. 4-INCH FLANGED SWING FLEX CHECK VALVE
8. 4-INCH FLANGED RESILIENT WEDGE GATE VALVE
9. 4-INCH X 4-INCH FLANGED D.I. CROSS
10. 1-1/2 INCH SCH 40 S.S. PIPE & FITTINGS THROUGH WALL
11. SUMP PUMP
12. S.S. CHAIN HOOK
13. PVC SPLICE BOX W/ WATERTIGHT CORD GRIP
14. GFI RECEPTACLE
15. GAS TIGHT RUBBER MODULAR SEAL W/ S.S. NUTS & BOLTS
16. POLY WALL SLEEVE
17. FLOAT BRACKET
18. BOOT W/ S.S. CLAMP, TYP.
19. PRECAST DOUBLE BOX STRUCTURE
20. INTERIOR POLY LINER
21. 4-INCH STAINLESS STEEL MPT X CAMLOCK FITTING W/A 4-INCH STAINLESS STEEL PRESSURE RATED DUST CAP
22. GUIDE RAILS WITH S.S. TRASH BASKET CAPABILITIES
23. CORROSION RESISTANT, VAPOR TIGHT LIGHT SWITCH WITH BLOWER THAT IS ACCESSIBLE FROM ABOVE
24. 100 WATT INCANDESCENT MOUNTED VAPOR TIGHT LIGHT (QTY. 2)
25. CONDUIT FOR SUMP PUMP CABLE AND ELECTRICAL WIRING WITH STAINLESS STEEL FASTENERS
26. GATE CATCH
27. 4-INCH FLANGED D.I. 90° ELBOW
28. 30" x 36" ACCESS HATCH
29. VENTILATION BLOWER W/ 8-INCH S.S. VENT W/TWO (2) 90° BENDS & #4 S.S. MESH SCREEN
30. 4" STAINLESS STEEL VENT W/TWO (2) 90° BENDS & #4 S.S. MESH SCREEN, TYP.
31. 2" COMBINATION AIR RELEASE VALVE (SEE SHEET 37 FOR DETAIL OF AIR RELEASE VALVE), 4"x4" CROSS SHALL BE FACTORY TAPPED FOR THREADING 2" PIPE NIPPLE
32. 4" DISMANTLING JOINT
33. 24" x 24" ACCESS HATCH

LIFT STATION - PLAN VIEW

SCALE: 1"= 4'

DATE	REVISIONS	INIT.

GREAT PLAINS AREA INDIAN HEALTH SERVICE
OFFICE OF ENVIRONMENTAL HEALTH & ENGINEERING

DIVISION OF FACILITIES MANAGEMENT
115 4TH AVE SE; FEDERAL BUILDING RM 309
ABERDEEN, SD 57401
(605) 226-7451

INDIAN HEALTH SERVICE 1955

PROPOSED LIFT STATION PLAN VIEW DETAIL
ROSEBUD, SOUTH DAKOTA
RB LIFT STATION REPLACEMENT
GP24RB401H02

DRAWN BY: L. GAYTON, EI
CHECKED BY: C. SAWATZKY, PE
APPROVED BY: C. SAWATZKY, PE
FILE NAME: GP24RB401H02_SHT_PLAN 2
LAYOUT NAME: PROP. LIFT STATION PLAN VIEW
PROJ ENG: C. SWATZKY, PE SCALE: 1"=4'

SHEET 7 OF 12

USER: lgayton FILE: S:\OEHE\DFM\1 projects\1 locations\(rb) rosebud\gp24rb401h02 lift station design\DESIGN\2_design-plans-specs\drawings-plans-concepts\CAD\GP24RB401H02_SHT_Plan 2.dwg 11/21/

INTERIOR OF CONCRETE WET WELL TO BE POLYLINED. EXTERIOR TO BE COATED WITH APPROVED COAL TAR EPOXY COATING.

FACTORY COAT ALL DUCTILE IRON PIPE AND FITTINGS IN BOTH THE VALVE VAULT AND THE WET WELL WITH APPROVED EPOXY COATING. PROVIDE S.S. WASHERS ON EITHER END OF FLANGED CONNECTIONS TO PROTECT COATING. DO NOT COAT S.S. WASHERS, NUTS AND BOLTS. CONTRACTOR HAS THE OPTION TO PROVIDE FLANGED HDPE PIPING WITH IN THE VAULT AS WELL.

ANY DAMAGE TO THE CONCRETE STRUCTURE INCLUDING SPALLED CONCRETE SHALL BE RESTORED/CORRECTED WITH NON-SHRINK CEMENT GROUT PER MANUFACTURER RECOMMENDATIONS.

AREA INSIDE THE FENCE SHALL BE BUILT UP TO THE SUBGRADE ELEVATION 2707.54' WITH STRUCTURAL FILL, COVERED WITH POLY SHEETING AND THEN COVERED WITH 3" OF CRUSHED ROCK AS SPECIFIED TO A FINAL ELEVATION OF 2707.79'. CONCRETE PADS TO MATCH FINISHED ELEVATION OF LIFT STATION COVER. ALL SUBGRADE SHALL BE SLOPED TO DRAIN AWAY FROM ALL STRUCTURES.

SUMP PUMP DISCHARGE PIPE SHALL BE SUPPORTED BY WALL BRACKETS PER SPECIFICATIONS.

BACKFILL AT A 4:1 SLOPE FROM THE EDGE OF THE LANDSCAPE EDGING TO THE EXISTING GRADE

AREA WITHIN THE LANDSCAPE EDGING OF THE PROJECT SHALL CONSIST OF PIT-RUN GRAVEL FROM UNDISTURBED EARTH TO FINISHED SUBGRADE.

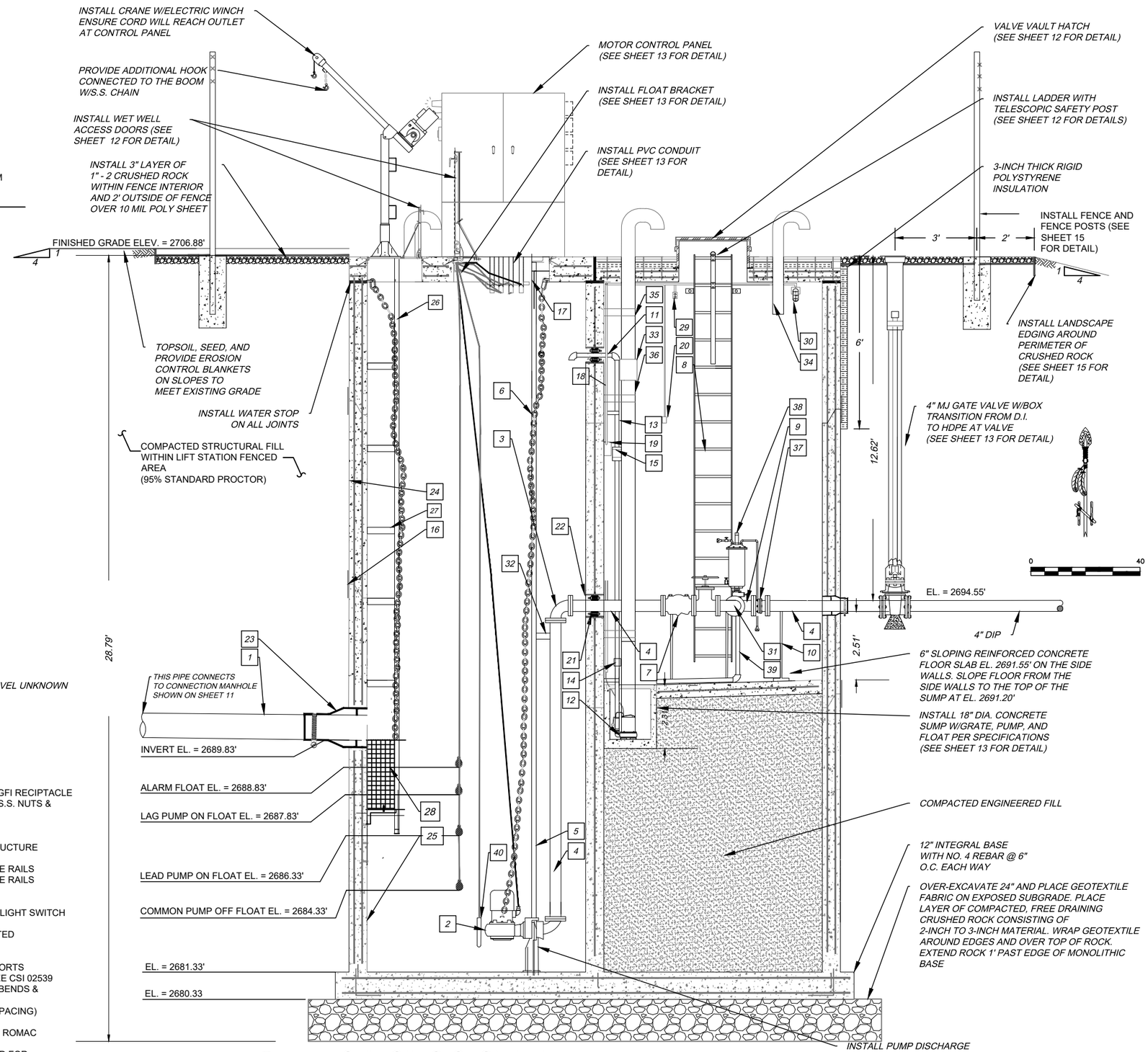

A/6 **LIFT STATION - SECTION VIEW**

SCALE: 1" = 4'

INDEX

1. 12-INCH PVC PIPE @ 1% SLOPE
2. SUBMERSIBLE CHOPPER SEWAGE PUMP - VAUGHAN MODEL V3V/V3VR
3. 4-INCH FLANGED D.I. ELBOW, FACTORY COATED W/TNEMEC PERMA SHIELD 431 OR EQUAL
4. 4-INCH CL 52 D.I. PIPE FACTORY COATED W/TNEMEC PERMA SHIELD 431 OR EQUAL
5. 2-INCH S.S. PUMP GUIDE RAIL 6. S.S. CHAIN
6. S.S. CHAIN
7. 4-INCH FLANGED SWING FLEX CHECK VALVE
8. 4-INCH FLANGED RESILIENT WEDGE GATE VALVE
9. 4-INCH X 4-INCH FLANGED D.I. CROSS
10. STAINLESS STEEL PIPE SUPPORTS (4)
11. 1-1/2 INCH SCH 40 S.S. PIPE & FITTINGS THROUGH WALL
12. SUMP PUMP
13. 1-1/2 INCH SCH 80 PVC DISCHARGE PIPING
14. 1-1/2 INCH SCH 80 PVC UNION
15. 1-1/2 INCH PVC BALL CHECK VALVE
16. MASTIC WRAP AND HYDROPHILIC BUTYL WATERSTOP JOINT SEAL (SEE SHEET 37 FOR DETAIL)
17. S.S. CHAIN HOOK
18. CONDUIT FOR SUMP PUMP CABLE & ELECTRICAL WIRES
19. PVC SPLICE BOX W/WATERTIGHT CORD GRIP
20. CORROSION RESISTANT VAPOR TIGHT GFI RECIPTACLE
21. GAS TIGHTRUBBER MODULAR SEAL W/ S.S. NUTS & BOLTS
22. POLY WALL SLEEVE W/ WATER STOP
23. BOOT W/ S.S.CLAMP
24. PRECAST CONCRETE DOUBLE BOX STRUCTURE
25. INTERIOR POLY LINER
26. STAINLESS STEEL TRASH BASKET GUIDE RAILS
27. STAINLESS STEEL TRASH BASKET GUIDE RAILS SUPPORT BRACKETS.
28. STAINLESS STEEL TRASH BASKET
29. CORROSION RESISTANT, VAPOR TIGHT LIGHT SWITCH AND BLOWER
30. 100 WATT INCANDESCENT WALL MOUNTED VAPOR TIGHT LIGHT, (QTY. 2)
31. 4-INCH FLANGED D.I. 90° ELBOW
32. INTERMEDIATE PUMP GUIDE RAIL SUPPORTS
33. VALVE VAULT VENTILATION BLOWER, SEE CSI 02539
34. 4-INCH S.S. VENT PIPING W/TWO (2) 90° BENDS & #4 S.S. MESH SCREEN, TYP.
35. 2" WIDE S.S. VENT PIPE SUPPORTS (4' SPACING)
36. 4" SCH. 40 PVC PIPE
37. 4" DISMANTLING JOINT, STYLE DJ405 BY ROMAC
38. 2" COMBINATION AIR RELEASE VALVE, 4"x4" CROSS SHALL BE FACTORY TAPPED FOR THREADING 2" PIPE NIPPLE
39. DRAIN PIPING FROM ARV SLOPED TO SUMP
40. TRANSDUCER FOR PLC WITHIN CONTROL PANEL

DATE	REVISIONS	INIT.

GREAT PLAINS AREA INDIAN HEALTH SERVICE
OFFICE OF ENVIRONMENTAL HEALTH & ENGINEERING

DIVISION OF FACILITIES MANAGEMENT
115 4TH AVE SE; FEDERAL BUILDING RM 309
ABERDEEN, SD 57401
(605) 226-7451

INDIAN HEALTH SERVICE 1955

PROPOSED LIFT STATION SECTION VIEW DETAIL

ROSEBUD, SOUTH DAKOTA
RB LIFT STATION REPLACEMENT
GP24RB401H02

DRAWN BY: L. GAYTON, EI
CHECKED BY: C. SAWATZKY, PE
APPROVED BY: C. SAWATZKY, PE
FILE NAME: GP24RB401H02_SHT_PLAN 2
LAYOUT NAME: PROP. WET WELL SECTION VIEW
PROJ ENG: C. SAWATZKY, PE
SCALE: 1"=4'

SHEET 8 OF 12

USER: lgayton FILE: S:\OEHE\DFM\1 projects\1 locations\(rb) rosebud\gp24rb401h02 lift station design\DESIGN\2_design-plans-specs\drawings-plans-concepts\CAD\GP24RB401H02_SHT_Plan 2.dwg 11/21/2

USER: lgayton FILE: S:\OEHE\DFM\1_projects\1_locations\(rb) rosebud\gp24rb401h02 lift station design\DESIGN\2_design-plans-specs\drawings-plans-concepts\CAD\GP24RB401H02_SHT_Plan 2.dwg 11/21/

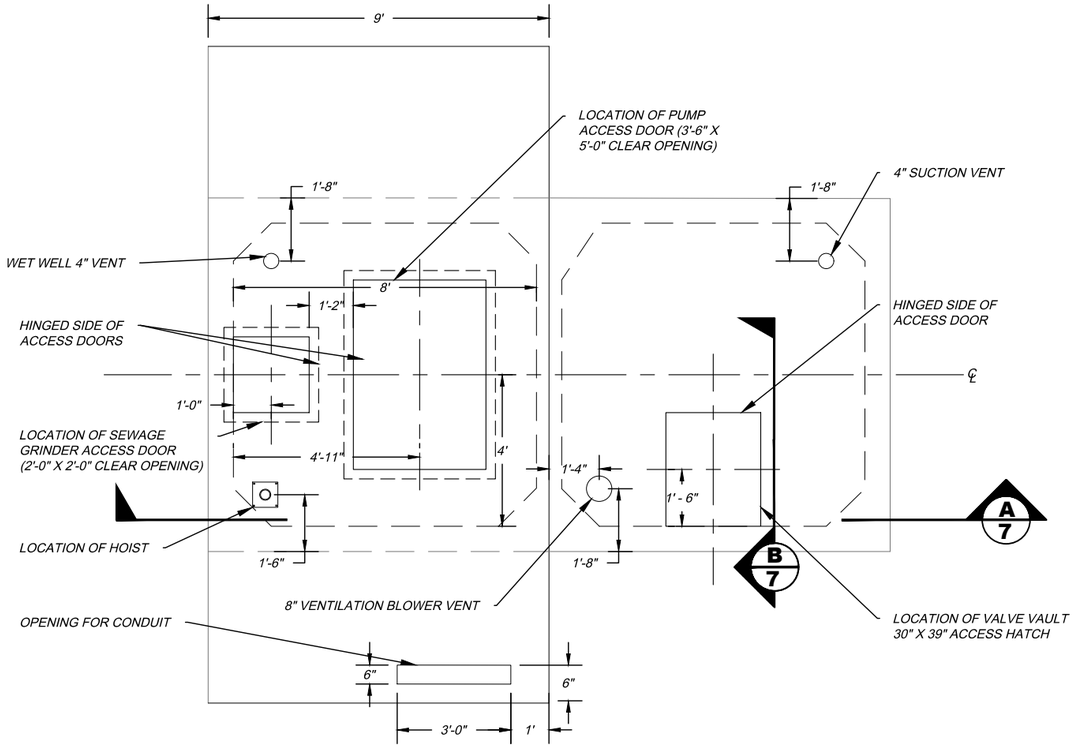

LIFT STATION - COVER DIMENSIONS

SCALE: 1" = 4'

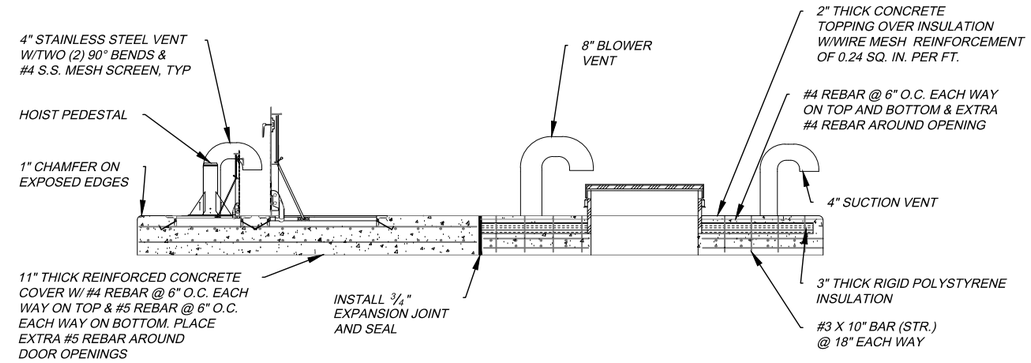

A/7 LIFT STATION COVER

NOT TO SCALE

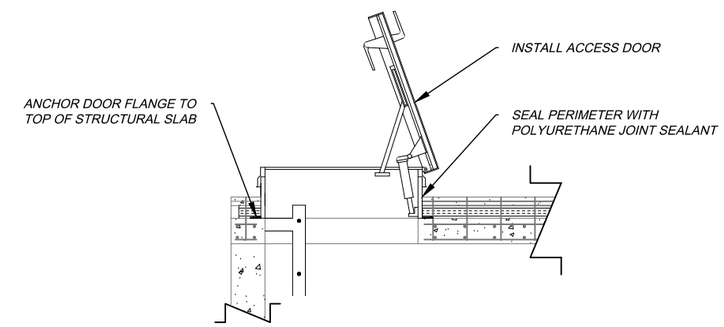

B/7 STANDARD VALVE VAULT ACCESS HATCH

NOT TO SCALE

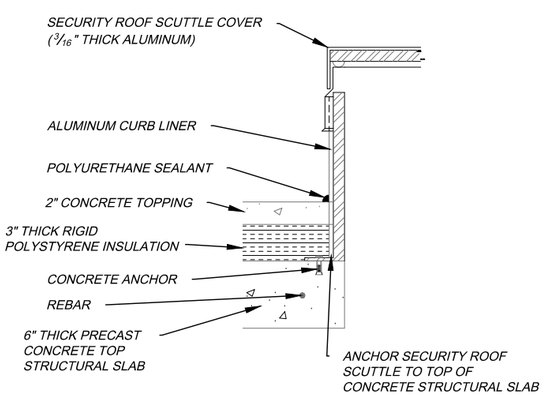

STANDARD VAULT HATCH DETAIL

NOT TO SCALE

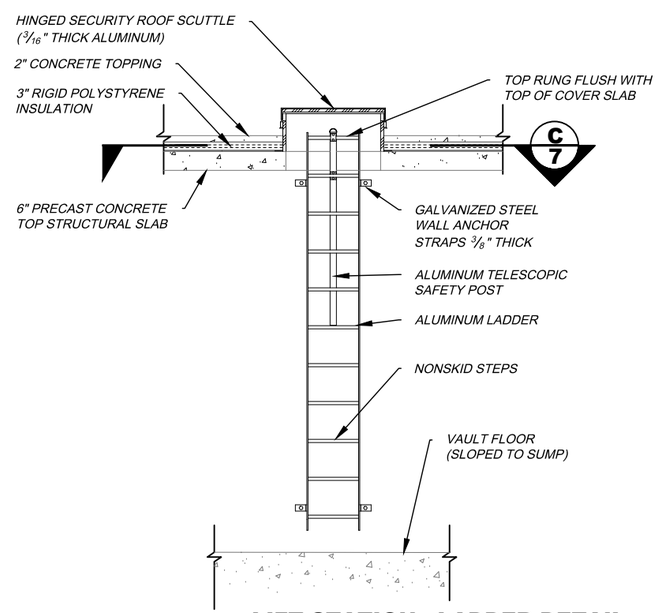

LIFT STATION - LADDER DETAIL

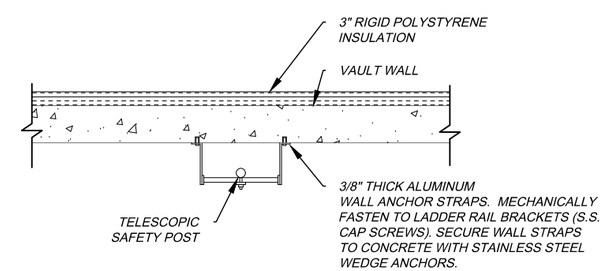

C/7 STANDARD LADDER SECTIONAL VIEW

NOT TO SCALE

DATE	REVISIONS	INIT.

GREAT PLAINS AREA INDIAN HEALTH SERVICE
OFFICE OF ENVIRONMENTAL HEALTH & ENGINEERING

DIVISION OF FACILITIES MANAGEMENT
115 4TH AVE SE; FEDERAL BUILDING RM 309
ABERDEEN, SD 57401
(605) 226-7451

INDIAN HEALTH SERVICE 1955

LIFT STATION DETAILS

ROSEBUD, SOUTH DAKOTA
RB LIFT STATION REPLACEMENT
GP24RB401H02

DRAWN BY: L. GAYTON, EI
CHECKED BY: C. SAWATZKY, PE
APPROVED BY: C. SAWATZKY, PE

FILE NAME: GP24RB401H02_SHT_PLAN 2
LAYOUT NAME: LIFT STATION DETAILS
PROJ ENG: C. SAWATZKY, SCALE: 1"=4'

SHEET 9 OF 12

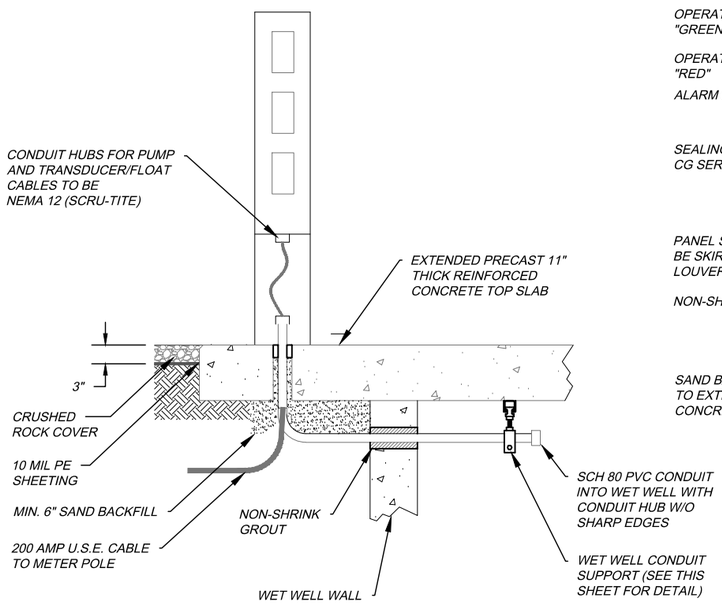

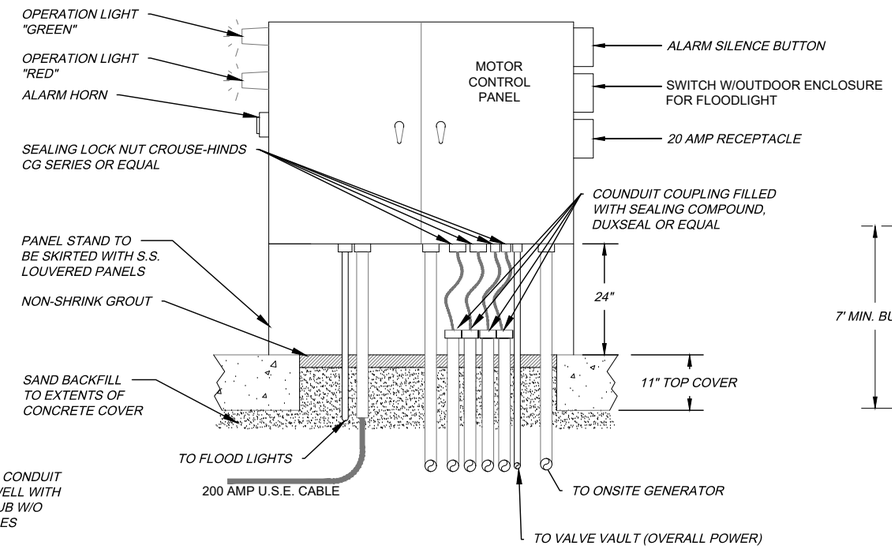

NOTE: INSTALL (7) 2" & (2) 1" SCH 80 PVC CONDUITS THROUGH CONCRETE PAD. 2" CONDUITS FOR MAIN ELECTRIC POWER, PUMP CABLES, TRANSDUCER AND FLOAT CABLES, FUTURE SCADA AND GENERATOR CABLES, EACH HAVING LONG SWEEP 90'S AND CONDUIT HUBS WITHOUT SHARP EDGES ON THE ENDS. 1" CONDUITS FOR FLOOD LIGHT & VALVE VAULT WIRING (WITH LONG SWEEP 90).

EACH PUMP AND FLOAT CABLE MUST GO THROUGH AN INDIVIDUAL SEALING LOCKNUT WHEN EXITING THE CONTROL PANEL.

ALARM LIGHTS SHALL BE FACED TOWARDS THE STREET FOR VISIBILITY

PROVIDE LED LIGHT INSIDE PANEL

STANDARD CONTROL PANEL DETAIL
NOT TO SCALE

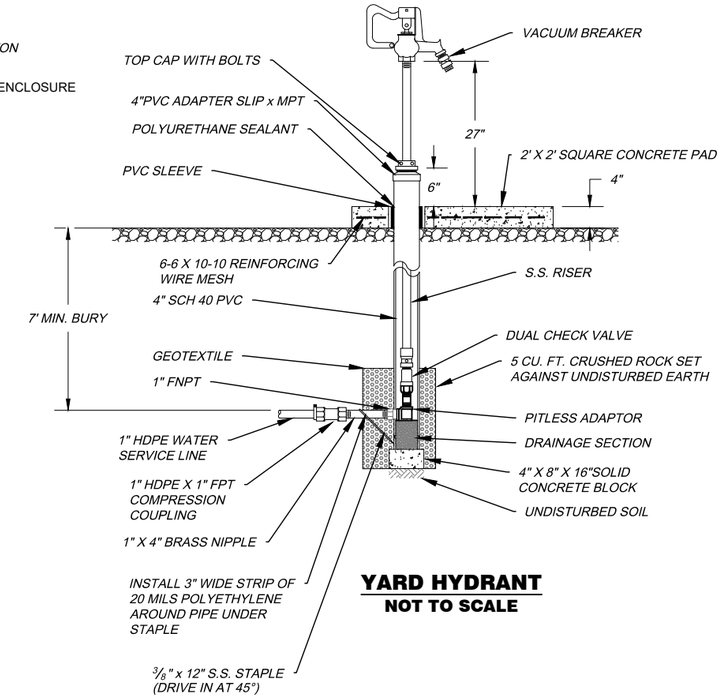

YARD HYDRANT
NOT TO SCALE

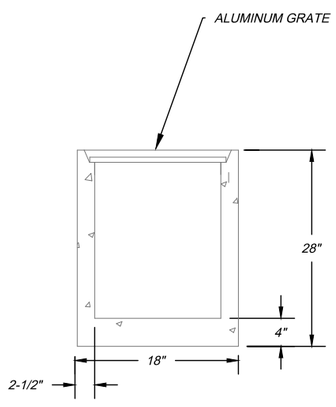

STANDARD SUMP DETAIL
NOT TO SCALE

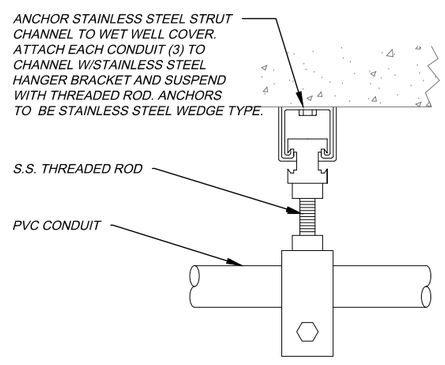

WET WELL CONDUIT SUPPORT DETAIL
NOT TO SCALE

NOTE: ALL GATE VALVES SHALL BE FITTED WITH AN ADAPTER II CENTERING DEVICE AT THE TIME OF CONSTRUCTION

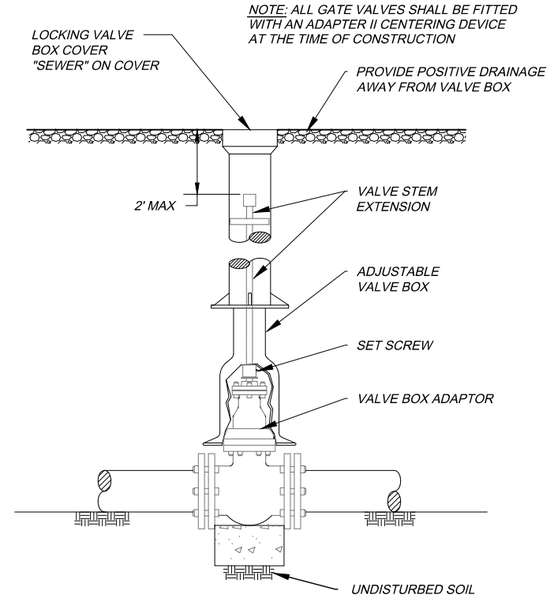

GATE VALVE AND BOX
NOT TO SCALE

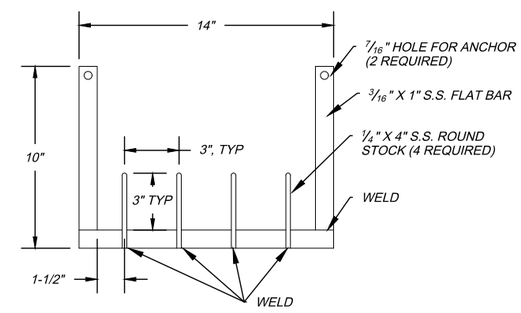

FLOAT SWITCH BRACKET
NOT TO SCALE

DATE	REVISIONS	INIT.

GREAT PLAINS AREA INDIAN HEALTH SERVICE
OFFICE OF ENVIRONMENTAL HEALTH & ENGINEERING

DIVISION OF FACILITIES MANAGEMENT
115 4TH AVE SE; FEDERAL BUILDING RM 309
ABERDEEN, SD 57401
(605) 226-7451

INDIAN HEALTH SERVICE 1955

LIFT STATION DETAILS
ROSEBUD, SOUTH DAKOTA
RB LIFT STATION DESIGN
BP24RB401H02

DRAWN BY: L. GAYTON, EI
FILE NAME: GP24RB401H02_SHT_PLAN 2
CHECKED BY: C. SAWATZKY, PE
LAYOUT NAME: LIFT STATION DETAILS
APPROVED BY: C. SAWATZKY, PE
PROJ ENG: C. SAWATZKY, PE
SCALE: 1"=4'

SHEET 10 OF 12

USER: lgayton FILE: S:\OEHE\DFM\1 projects\1 locations\(rb) rosebud\gp24rb401h02 lift station design\DESIGN\2_design-plans-specs\drawings-plans-concepts\CAD\GP24RB401H02_SHT_Plan 2.dwg 11/21/2

USER: lgayton FILE: S:\OEHE\DFM\1_projects\1_locations\(rb) rosebud\gp24rb401h02 lift station design\DESIGN\2_design-plans-specs\drawings-plans-concepts\CAD\GP24RB401H02_SHT_Plan 2.dwg 11/21/

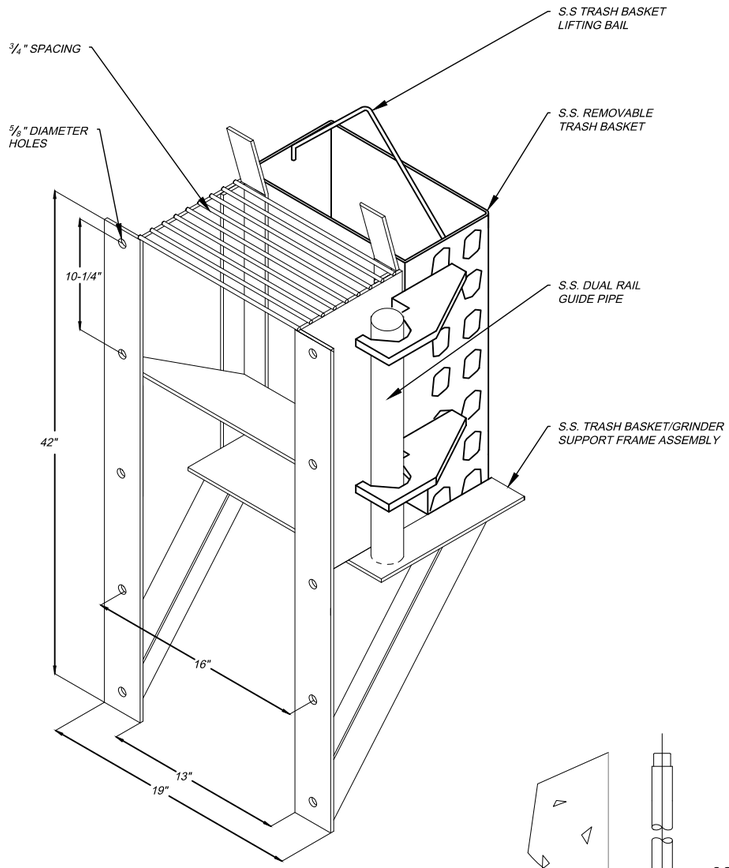

TRASH BASKET SIDE VIEW
NOT TO SCALE

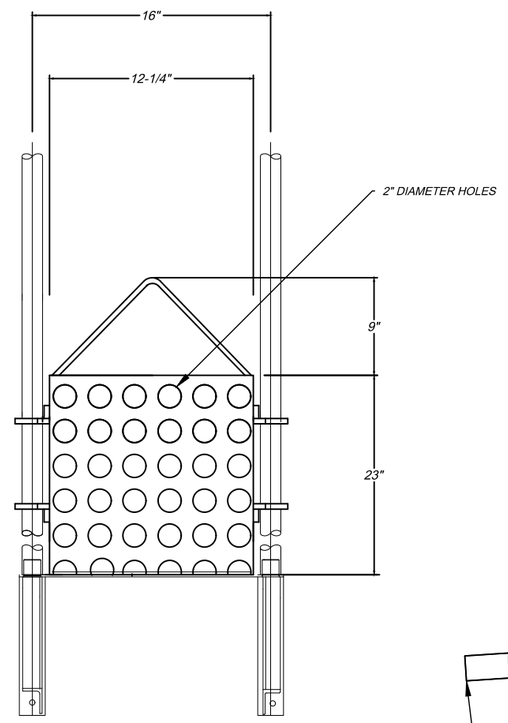

TRASH BASKET FRONT VIEW
NOT TO SCALE

NOTE: TRASH BASKET SYSTEM SHALL BE COMPATIBLE AND OPERATE USING SAME GUIDE RAIL SYSTEM.

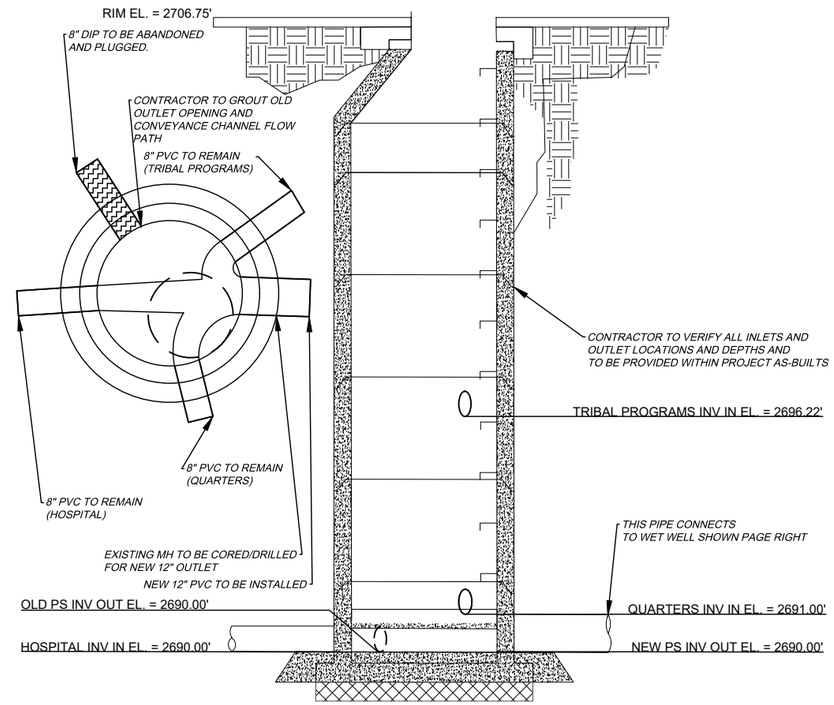

SCALE: 1" = 40'

INLET MANHOLE - SECTION VIEW AND PLAN VIEW

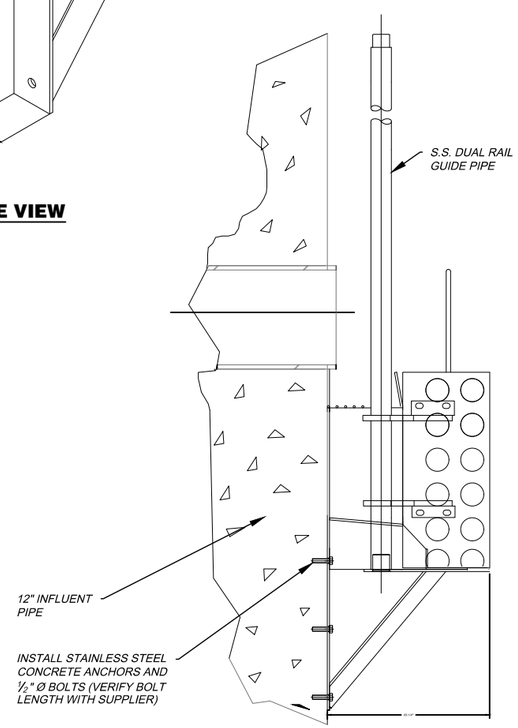

TRASH BASKET SIDE VIEW
NOT TO SCALE

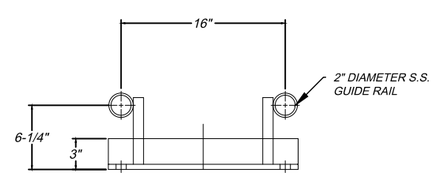

UPPER RAIL GUIDE SUPPORT BRACKET
NOT TO SCALE

DATE	REVISIONS	INIT.

GREAT PLAINS AREA INDIAN HEALTH SERVICE
OFFICE OF ENVIRONMENTAL HEALTH & ENGINEERING

DIVISION OF FACILITIES MANAGEMENT
115 4TH AVE SE; FEDERAL BUILDING RM 309
ABERDEEN, SD 57401
(605) 226-7451

INDIAN HEALTH SERVICE 1955

LIFT STATION DETAILS
ROSEBUD, SOUTH DAKOTA
RB LIFT STATION REPLACEMENT
GP24RB401H02

DRAWN BY: L. GAYTON, EI
CHECKED BY: C. SAWATZKY, PE
APPROVED BY: C. SAWATZKY, PE

FILE NAME: GP24RB401H02_SHT_PLAN 2
LAYOUT NAME: RB LIFT STATION DESIGN
PROJ ENG: C. SAWATZKY, PE SCALE: 1"=4'

SHEET 11 OF 12

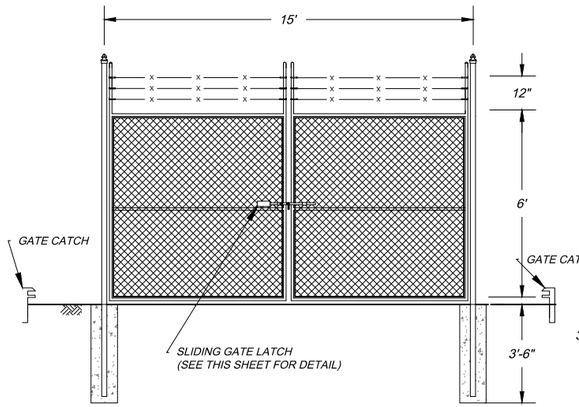

DETAIL OF DOUBLE GATE
NOT TO SCALE

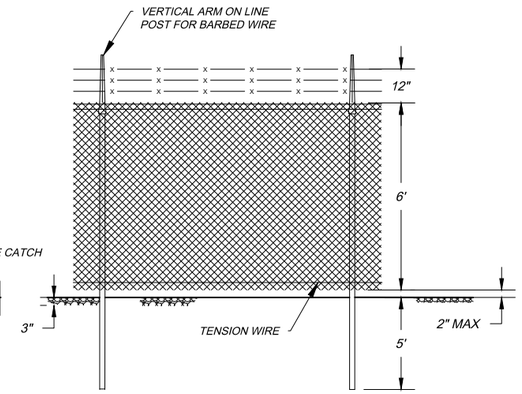

LINE FENCE DETAIL
NOT TO SCALE

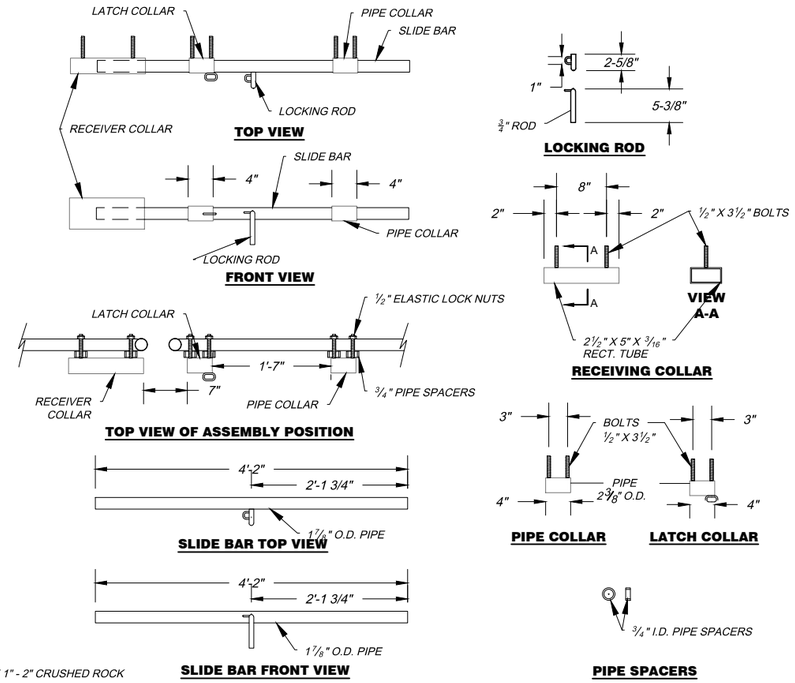

DETAIL OF SLIDING GATE LATCH
NOT TO SCALE

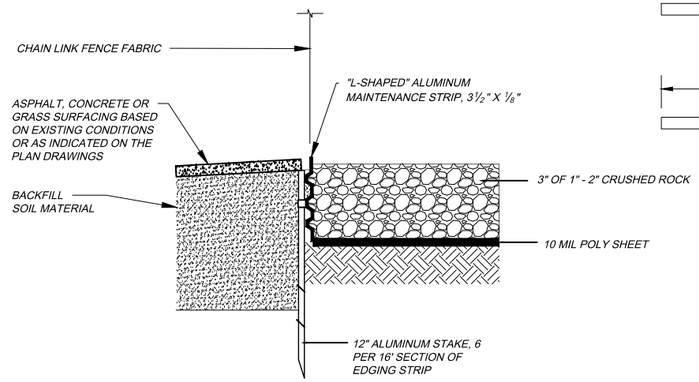

LANDSCAPE EDGING DETAIL
NOT TO SCALE

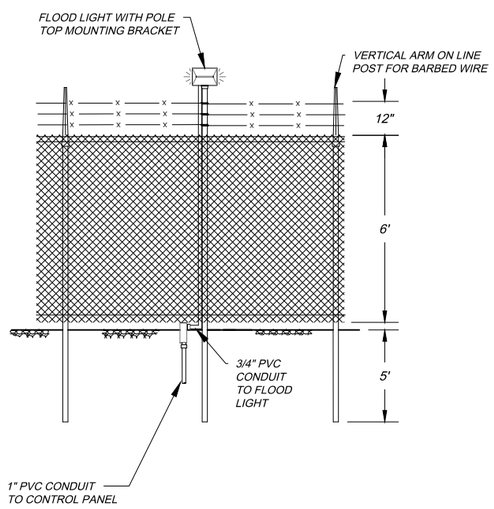

DETAIL OF FENCE MOUNTED LIGHT
NOT TO SCALE

NOTE: RUN 3/4" PVC CONDUIT ALONGSIDE FENCE POLE AND THEN ATTACH TO FLOOD LIGHT

FACE LIGHT TOWARDS CONTROL PANEL

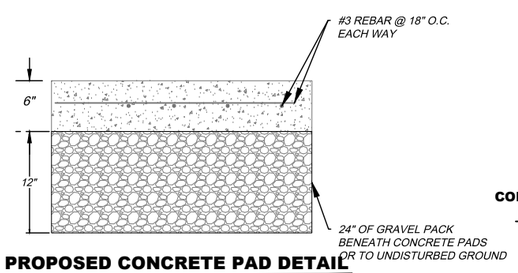

PROPOSED CONCRETE PAD DETAIL
NOT TO SCALE

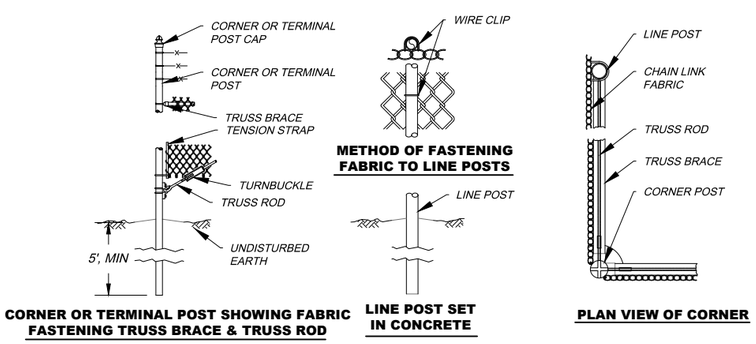

CORNER OR TERMINAL POST SHOWING FABRIC FASTENING TRUSS BRACE & TRUSS ROD

METHOD OF FASTENING FABRIC TO LINE POSTS

LINE POST SET IN CONCRETE

PLAN VIEW OF CORNER

CHAIN LINK FENCE DETAILS
NOT TO SCALE

DATE	REVISIONS	INIT.

GREAT PLAINS AREA INDIAN HEALTH SERVICE
OFFICE OF ENVIRONMENTAL HEALTH & ENGINEERING

DIVISION OF FACILITIES MANAGEMENT
115 4TH AVE SE; FEDERAL BUILDING RM 309
ABERDEEN, SD 57401
(605) 226-7451

FENCE DETAILS
ROSEBUD, SOUTH DAKOTA
RB LIFT STATION REPLACEMENT
GP24RB401H02

DRAWN BY: L. GAYTON, EI
FILE NAME: GP24RB401H02_SHT_PLAN 2
CHECKED BY: C. SAWATZKY, PE
LAYOUT NAME: RB LIFT STATION DETAILS
APPROVED BY: C. SAWATZKY, PE
PROJ ENG: C. SAWATZKY, PE
SCALE: 1"=4'

SHEET 12 OF 12

USER: lgayton FILE: S:\OEHE\DFM\1 projects\1 locations\(rb) rosebud\gp24rb401h02 lift station design\DESIGN\2_design-plans-specs\drawings-plans-concepts\CAD\GP24RB401H02_SHT_Plan 2.dwg 11/21/