Atkinson-Noland
& Associates

2619 Spruce Street
Boulder, CO 80302
303.444.3620

32 Old Slip, 10th Floor
New York, NY 10005
917.647.9530

ana-usa.com

REPORT

NONDESTRUCTIVE TESTING
Robert Morris Statue
Independence National Historic Park
Philadelphia, PA 19106

PREPARED FOR:
Evergreene Architectural Arts
Kelly Caldwell
3009 Kaverton Road
District Heights, MD 20747
(212) 244 2800
kcaldwell@evergreene.com

PREPARED BY:
Gary Ogden
Atkinson-Noland & Associates, Inc.
32 Old Slip, 10th Floor
New York, NY 10005
gogden@ana-usa.com

Robert Morris Statue NDE
ANA Job No. 23-064
July 5, 2023

1. INTRODUCTION

On June 22nd, 2023, Gary Ogden from Atkinson-Noland and Associates (ANA) was on site to conduct nondestructive testing at the Robert Morris Statue at the Independence National Historic Park in Philadelphia, PA. Testing included the use of surface penetrating radar (SPR). Testing was conducted to determine the presence of any embedded metal dowels within the base to aid in the removal and repair of the statue in the future. The following report summarizes test methods, locations, and results. Initial findings were discussed on site with Tucker Simmons of Evergreene Architectural Arts (EAA). Appendix A provides a summary of the investigation findings.

2. SITE CONDITIONS

The Robert Morris statue is a bronze statue set atop a square die and base constructed of marble. The die and upper portion of the base appear to be solid sections of marble. The lower portion of the base (second base) is comprised of four individual stones with large (± one inch) open joints. From these open joints, an internal concrete base was observed. Figure 1 provides an overview of the statue and Figure 2 provides an image of the internal concrete base and the open joint between concrete and stone.

Figure 1. Image of the statue as viewed from the north. Labels are shown indicating the naming convention of the statue referenced throughout the report.

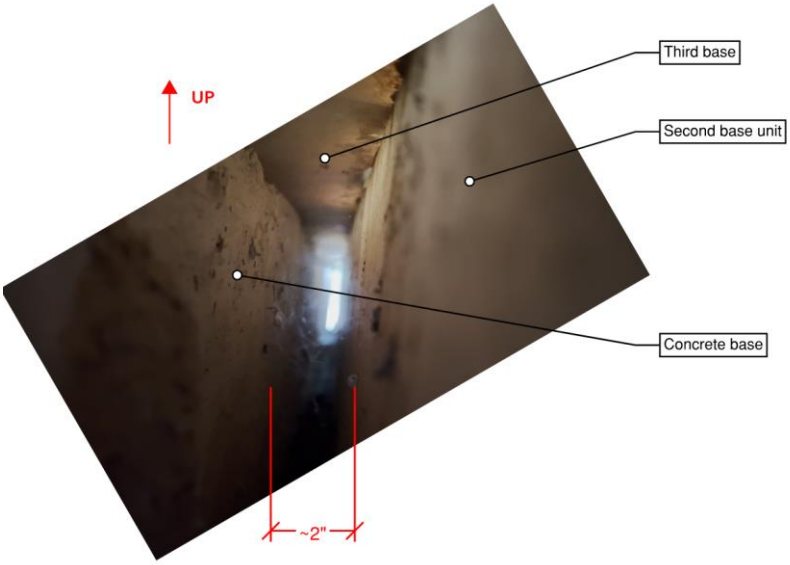

Figure 2. Image of the air gap between the marble and concrete at the base. The image is rotated for clarity.

1. INVESTIGATIVE TESTING

1.1. Surface Penetrating Radar

SPR was used to investigate the presence of internal dowels. The scanning was conducted with a Proceq GP8000 and GP8800, which are standalone instruments that utilize stepped frequencies from 200 to 4000 MHz concurrently during the scanning. This method is used to make use of varying frequency signals to see as much detail within the wall as possible. The SPR method involves the transmission of high frequency electromagnetic radio (radar) pulses into the object of interest and measuring the time elapsed between transmission, reflection off a buried discontinuity, and reception back at the surface radar antenna. A pulse of radar energy is generated on a dipole-transmitting antenna that is placed on the wall surface. The resulting wave of electromagnetic energy propagates into the material and portions of it are reflected to the antenna especially at discontinuities. The discontinuities where strong reflections occur are created by changes in dielectric properties of the underlying material. Void spaces, metal presence, and any distinct change in material will generate significant radar reflections due to a change in radar wave velocity at the interface. A representative SPR scan is shown in Figure 3.

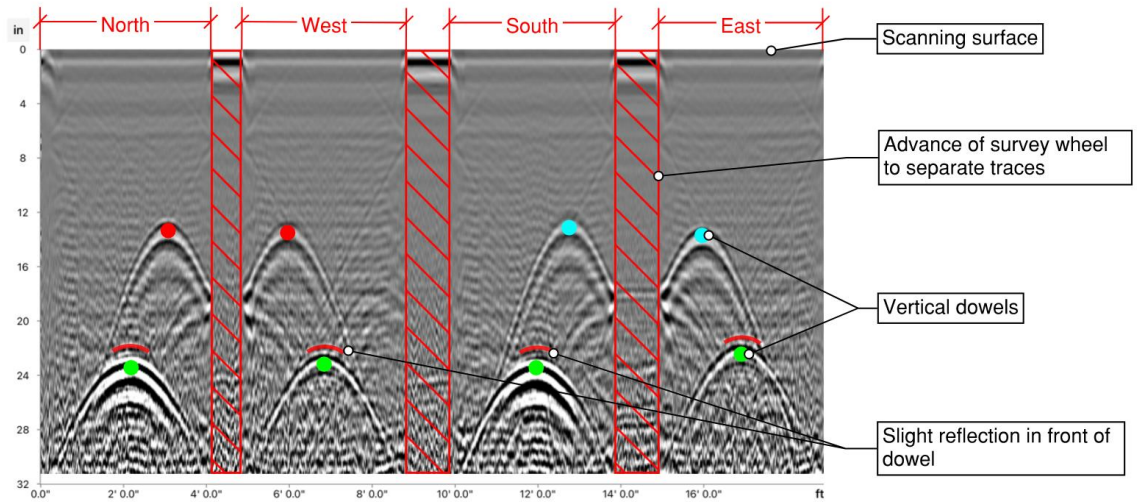

Figure 3. Representative SPR trace taken at the top of the die portion of the statue. A trace was collected on each surface. The solid circles represent embedded vertical dowels. Each color corresponds to an individual dowel as each dowel was visible on multiple faces.

2. INVESTIGATION SUMMARY

The investigations determined the presence of multiple vertical dowels within the statue. The dowels are assumed to be metallic. A total of three dowels were found connecting the bronze statue to the marble die below: one centered within the statue, one at the northwest corner, and another at the southeast corner. The center and corner dowels extended approximately 12.5 and 9 inches from the top of the marble die respectively. Based on the scanning results, the dowels at the corners appear to fit tightly into the holes in the stone. The center dowel had a slight reflection in front of the dowel as shown in Figure 3. This is likely indicative that the dowel is placed in a larger hole than itself. This hole is likely filled with material such as mortar. Refer to Figure 5 for a representation of the oversized hole.

At the base of the marble die, another likely dowel was centered in the stone. Based on the position, it is presumed that it connects from the die to the third base below. This dowel was not as conclusive based on the SPR results compared to the other dowels and its length could not be determined.

At the second base, there was an approximately two-inch gap between the back of the unit and the concrete base at the interior. This air gap attenuated the radar signal and any information on the concrete base could not be determined. Plan layouts at critical sections of the statue are presented in Figure 4 through Figure 7 below. Appendix A provides annotated images of each elevation.

Figure 4. Image of the north face indicating where plan section cuts are located.

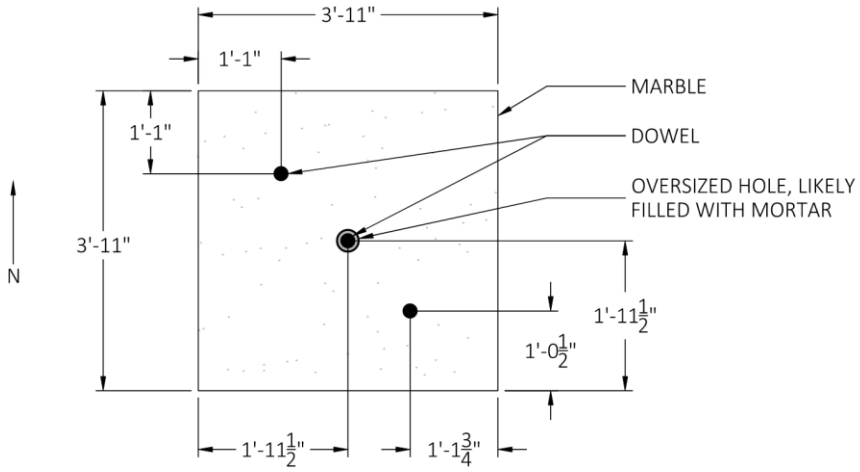

Figure 5. Section A-A. Three dowels were detected connecting the die to the bronze statue.

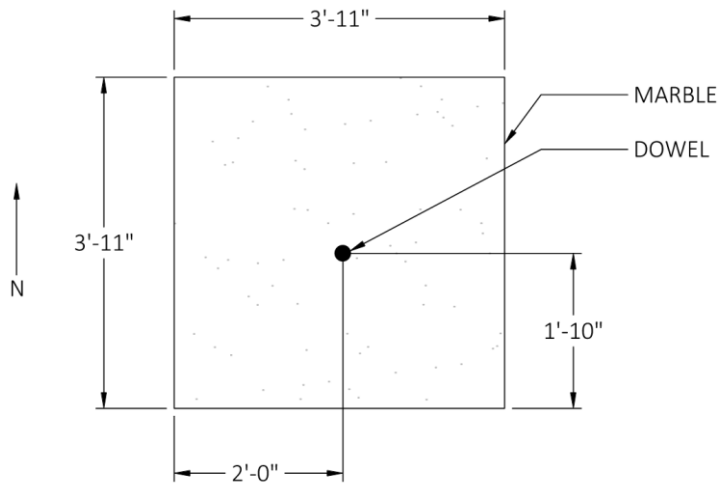

Figure 6. Section B-B. One dowel was detected connecting the third base and die.

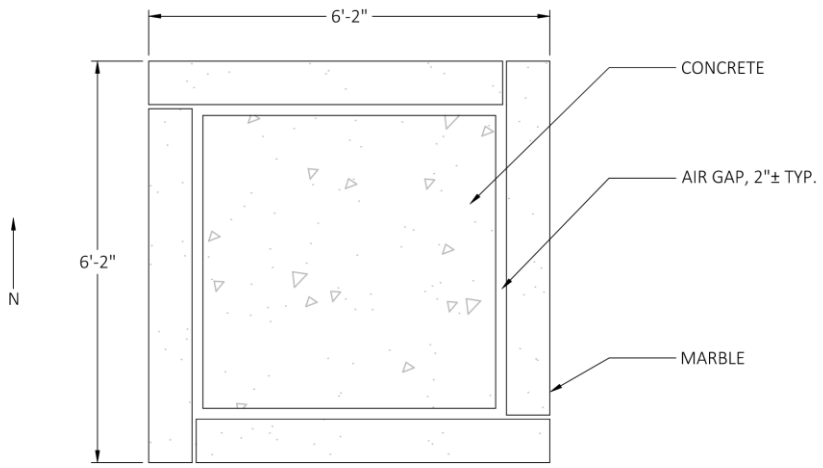

Figure 7. Plan Section C-C illustrates the concrete base and air gap present behind the second marble base.

The information contained in this report is based on the information available or collected at the time that this report was prepared, and we reserve the right to modify this report as additional information becomes available. Our services were performed using the degree of skill normally exercised by our professional peers and our findings were reached with a reasonable degree of engineering certainty. The client should be aware that our scope of work was limited to nondestructive evaluation of the statue for embedded dowels.

Appendix A:
Investigation Findings

Notes: Dowels shown with vertical lines. Each color represents a different dowel.
Refer to plan views for dowel positions.
Markups not to scale.

North

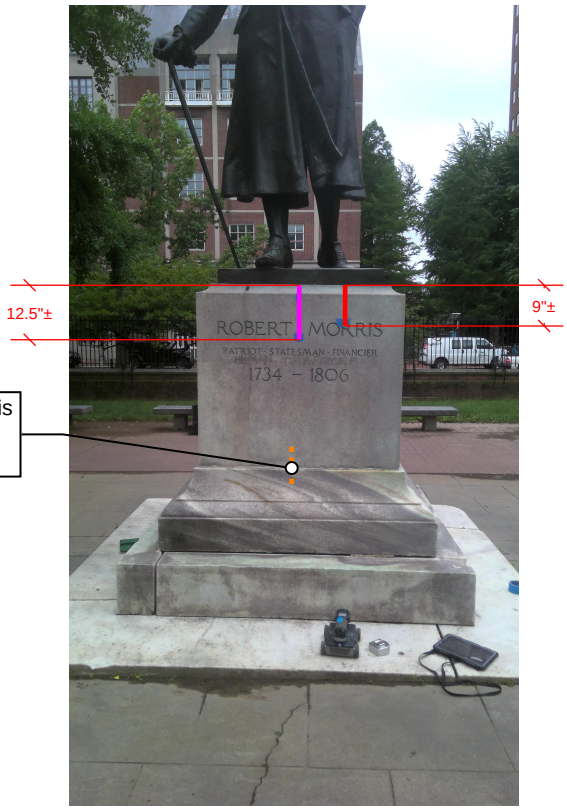

East

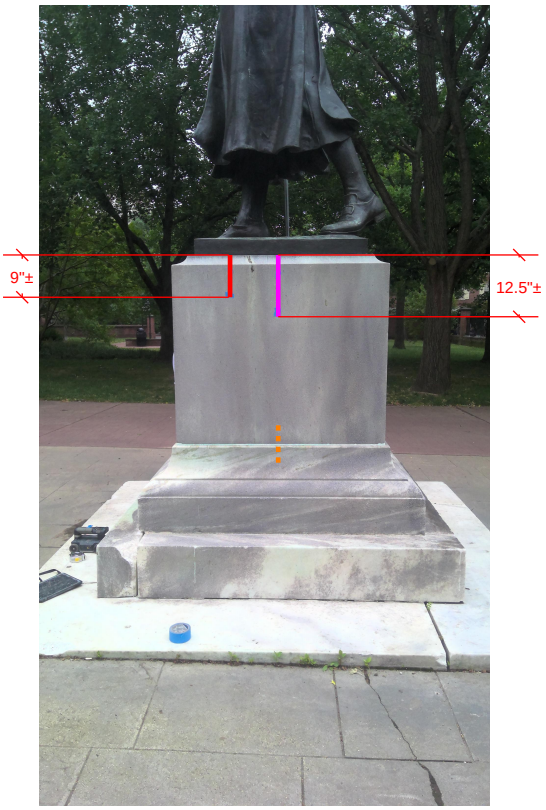

South

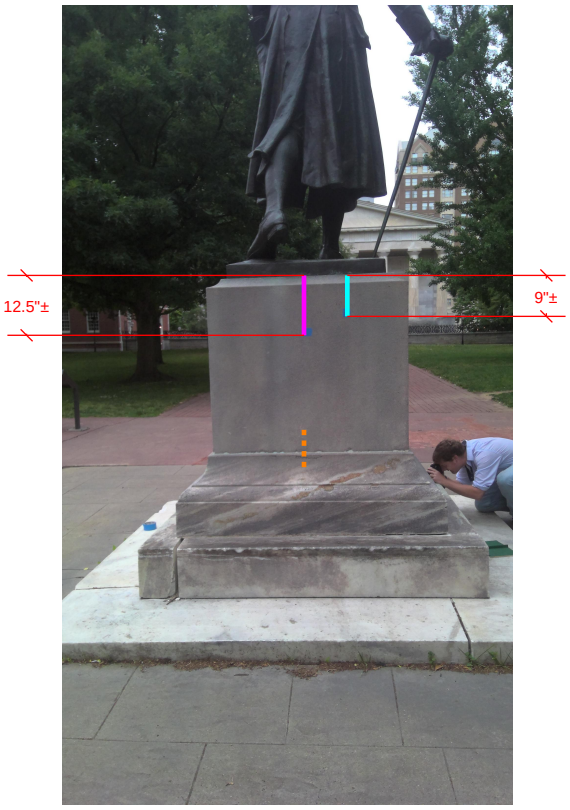
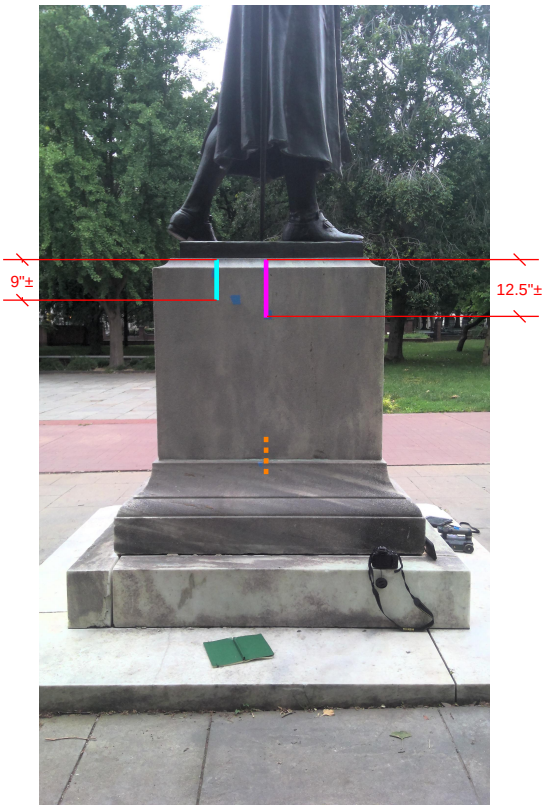
West