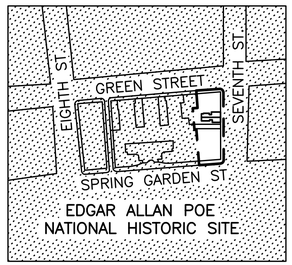

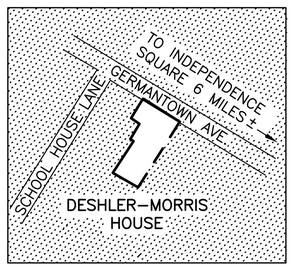

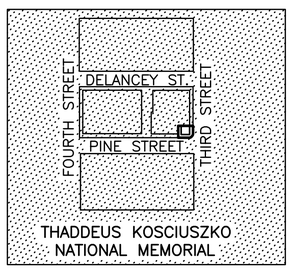

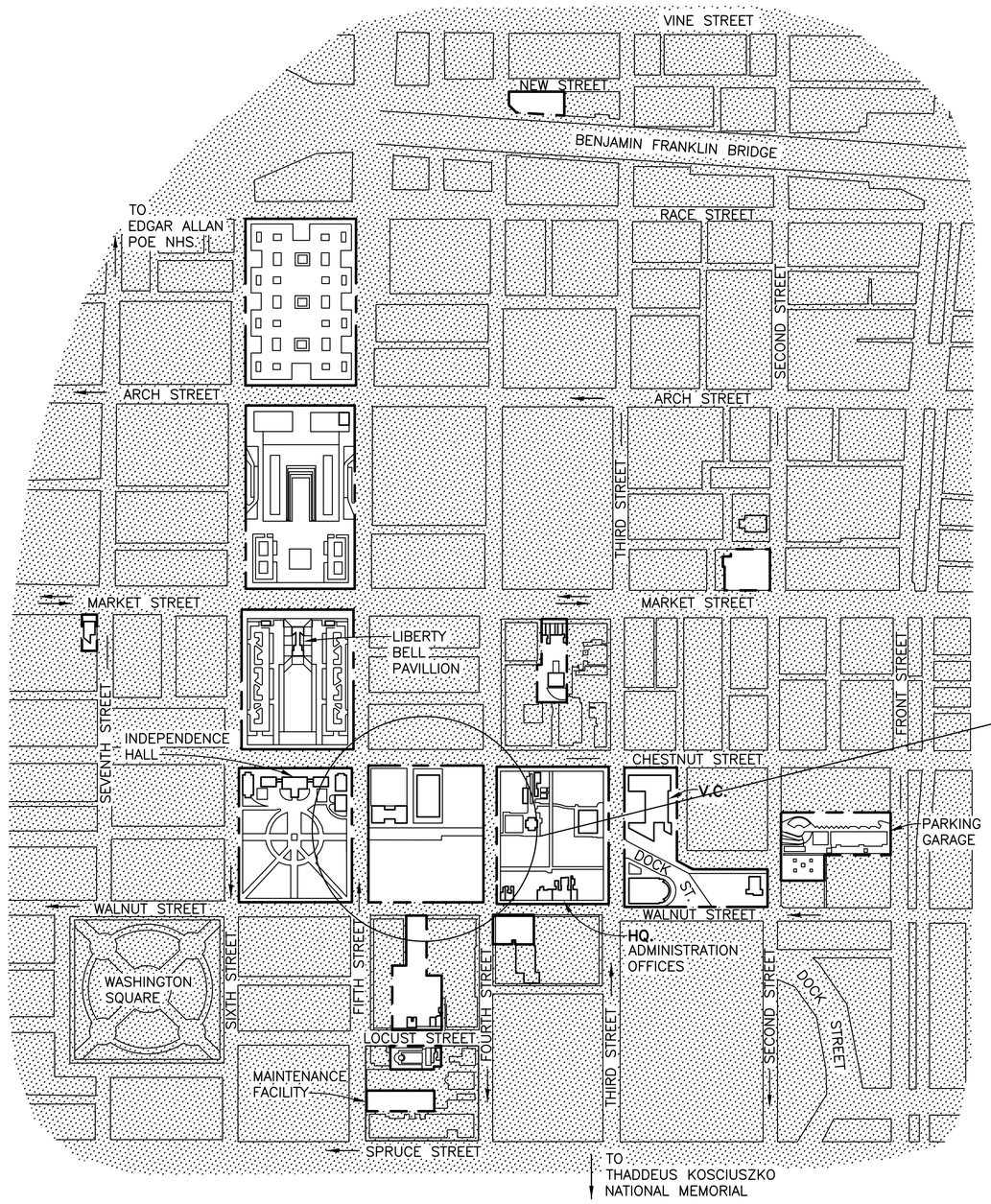

LEGEND

— — —	PARK BOUNDARY
— — — —	STATE LINE
V.C.	VISITOR CENTER
HQ.	PARK HEADQUARTERS

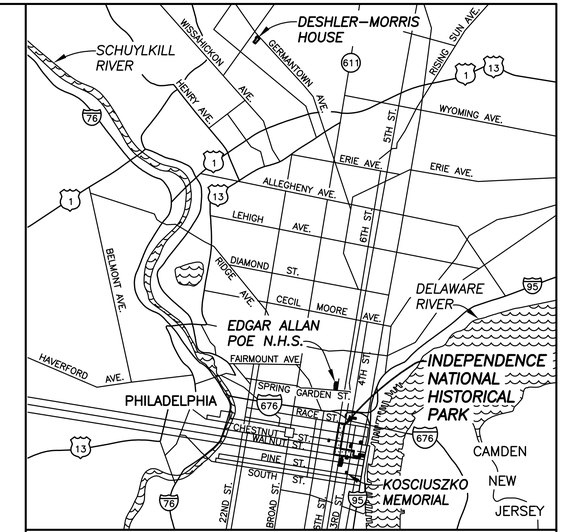

PHILADELPHIA
PENNSYLVANIA

1 0 1
SCALE OF MILES

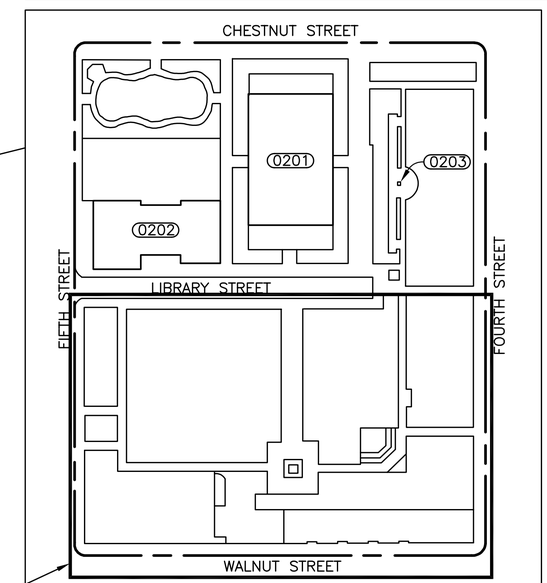

BLOCK 0200

AREA OF WORK

(0201) SECOND BANK OF THE UNITED STATES

(0202) LIBRARY HALL

(0203) TEA GARDEN

80 0 80 160
SCALE OF FEET

SCALE OF FEET
250 0 250 500
70 0 70 140
SCALE OF METERS

INDEPENDENCE NATIONAL HISTORICAL PARK

INDEPENDENCE NATIONAL HISTORICAL PARK
Planning for the Future, Preserving the Past

100% CONSTRUCTION DOCUMENTS
2/26/25

UNITED STATES
DEPARTMENT OF THE INTERIOR

NATIONAL PARK SERVICE
DENVER SERVICE CENTER

TITLE OF PROJECT
REHABILITATE SECOND BANK LANDSCAPE

LOCATION WITHIN PARK
SECOND BANK BLOCK

NAME OF PARK
INDEPENDENCE NATIONAL HISTORICAL PARK

REGION	COUNTY	STATE
NORTHEAST	PHILADELPHIA	PA

DRAWING NO. 391 186675

PKG. NO. INDE 308 228

SHEET 1 OF 41

BASIC DATA: BOUNDARY MAP 391/92,000; PARK MINI FOLDER 1989; REVISED & REDRAWN 1/95. UPDATED 11/98. SGS.

INDEX TO DRAWINGS

SUB–SHT.	DWG. TITLE	SHEET NO.
	REHABILITATE SECOND BANK BLOCK LANDSCAPE – COVER	1
GENERAL		
G1	DRAWING INDEX, GENERAL NOTES	2
G2	SITE AND STAGING ACCESS PLAN	3
CIVIL		
C1.0	SITE DISTURBANCE PLAN	4
C1.1	EXISTING CONDITIONS AND DEMOLITITON PLAN	5
C1.2	PROPOSED CONDITIONS PLAN	6
C1.3	SOIL EROSION & SEDIMENT CONTROL PLAN	7
C5.1	SITE AND DRAINAGE DETAILS	8
C5.2	SOIL EROSION AND SEDIMENT CONTROL DETAILS	9
C5.3	SITE, DRAINAGE, AND EROSION & SEDIMENT NOTES	10
ARCHITECTURE		
A1.0	EXISTING CONDITIONS	11
A2.0	REMOVALS PLAN	12
A3.0	PROPOSED SITE PLAN	13
A3.1	BASE BID MORRIS PLAZA & WALL REPAIR	14
A4.0	OPTION #1 PERIMETER WALLS –FOURTH STREET WALL	15
A4.1	OPTION #1 PERIMETER WALLS –WALNUT STREET WALL	16
A4.2	OPTION #1 PERIMETER WALLS –WALNUT STREET WALL	17
A4.3	OPTION #1 PERIMETER WALLS –FIFTH STREET & LIBRARY STREET WALLS	18
A4.4	OPTION #1 PLANTER SITE WALLS	19
A4.5	OPTION #2 INTERPRETIVE FOUNDATION WALLS – PLAN	20
A4.6	OPTION #2 INTERPRETIVE FOUNDATION WALLS – ELEVATIONS	21
A4.7	OPTION #3 MORRIS SCULPTURE CONSERVATION – PLAN & ELEVATIONS	22
A5.0	DETAILS	23
LANDSCAPE ARCHITECTURE		
LR1.1	LANDSCAPE REMOVALS AND PROTECTION PLAN	24
LR1.2	LANDSCAPE PROTECTION DETAILS	25
L1.1	LANDSCAPE LAYOUT PLAN	26
L2.1	LANDSCAPE GRADING PLAN	27
L3.1	LANDSCAPE PLANTING PLAN	28
L3.2	LANDSCAPE PLANTING DETAILS	29
L4.1	LANDSCAPE DETAILS	30
L4.2	LANDSCAPE DETAILS	31
L4.3	LANDSCAPE DETAILS	32
L4.4	LANDSCAPE DETAILS	33
L5.1	IRRIGATION WORK SCOPE DIAGRAM	34
STRUCTURAL		
S–0.0	GENERAL NOTES	35
S–0.1	SPECIAL INSPECTIONS	36
S–0.2	SPECIAL INSPECTIONS	37
S–1.0	PLANS	38
S–2.0	PARTIAL PLANS & ELEVATIONS	39
S–2.1	PARTIAL PLANS & ELEVATIONS	40
S–2.2	PARTIAL PLANS & ELEVATIONS	41

SYMBOL LEGEND

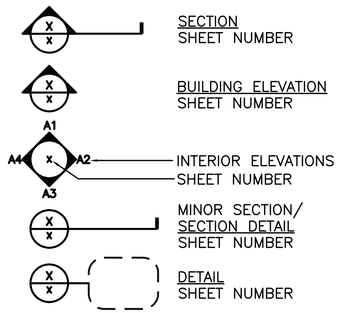

GENERAL NOTES

1. THE SECOND BANK BLOCK IS LISTED ON THE NATIONAL REGISTER OF HISTORIC PLACES AS PART OF THE INDEPENDENCE NATIONAL HISTORIC PARK DISTRICT. ALL WORK MUST BE PERFORMED IN ACCORDANCE WITH THE SECRETARY OF THE INTERIOR'S STANDARDS FOR THE TREATMENT OF HISTORIC PROPERTIES
2. THIS PROJECT INCLUDES REPAIR AND RESTORATION OF EXISTING MATERIALS WITH MATCHING IN KIND MATERIALS. THE INTENT OF THIS PHASE OF RESTORATION IS TO REPAIR DETERIORATED CONDITIONS AND RESTORE AREAS OF INCOMPATIBLE MATERIALS WITH HISTORICALLY APPROPRIATE MATERIALS TO IMPROVE THE LIFE OF THE PARK AND ENHANCE ITS HISTORIC CHARACTER.
3. IT IS IMPERATIVE THAT WORKMANSHIP OF THE HIGHEST QUALITY BE UTILIZED ON THIS HISTORIC SITE. PRECAUTIONS MUST BE TAKEN AT ALL TIMES TO ENSURE THE SITE'S SAFETY AND PRESERVATION. THE CONTRACTING OFFICER SHALL HAVE FULL DISCRETION TO SUSPEND WORK ON THE PART OF THE CONTRACTOR OR SUBCONTRACTOR WHICH, IN HIS OR HER OPINION, IS LIKELY TO RESULT IN DAMAGE TO THE SITE.
4. WORK SHALL BE ORGANIZED AND SCHEDULED FOR THE ENTIRE PROJECT TO FACILITATE THE WORK WITHOUT JEOPARDIZING THE PRESERVATION OF HISTORIC ARTIFACTS AND STRUCTURES ON THE SITE. PRESERVATION IS THE RESPONSIBILITY OF THE CONTRACTOR
5. CONTRACTOR IS SOLELY RESPONSIBLE FOR ALL SAFETY PRECAUTIONS, PROTECTION AND PERFORMING ALL WORK IN ACCORDANCE WITH APPLICABLE LAWS, LOCAL, STATE AND NATIONAL CODES AND ORDINANCES.
6. CONTRACTOR TO VERIFY ALL CONDITIONS AND DIMENSIONS IN THE FIELD AND TO REPORT ALL DISCREPANCIES IN THESE DRAWINGS AND RELATED SPECIFICATIONS TO CONTRACTING OFFICER FOR RESOLUTION PRIOR TO START OF CONSTRUCTION. FAILURE TO VERIFY ALL CONDITIONS AFFECTING THE WORK AND FAILURE TO REPORT DISCREPANCIES WILL NOT RELIEVE THE CONTRACTOR FROM COMPLETE COORDINATION OF ALL ASPECTS OF THE WORK.
7. DO NOT SCALE DRAWINGS. USE DIMENSIONS SHOWN WHERE NOT SHOWN, CONFIRM PRIOR TO CONSTRUCTION.
8. DO NOT DRILL INTO AND ANCHOR PROTECTION TO EXISTING BRICK OR STONE UNLESS APPROVED BY CONTRACTING OFFICER.
9. THE CONTRACTOR IS RESPONSIBLE FOR LOCATING, PROTECTING, AND / OR RELOCATING ALL EXISTING UTILITIES ENCOUNTERED IN THE WORK AREA.
10. THE CONTRACTOR SHALL BE RESPONSIBLE FOR DAMAGE TO THE PARK NEAR OR ADJACENT TO WORK AREA WHEN SUCH DAMAGE IS DUE TO THEIR ACTIONS OR NEGLECT.

ABBREVIATIONS

AFF	ABOVE FINISHED FLOOR
ACT	ACOUSTICAL CEILING TILE
ALT	ALTERNATE
ALUM	ALUMINUM
ARCH	ARCHITECT(URAL)
AUX	AUXILIARY
AGG	AGGREGATE
BD	BOARD
BOTT	BOTTOM
BLDG	BUILDING
CLG	CEILING
CTR	CENTER
℄	CENTER LINE
COL	COLUMN
CONC	CONCRETE
CMU	CONCRETE MASONRY UNIT
CONT	CONTINUOUS OR CONTINUE
CONTR	CONTRACT(OR)
CJ	CONTROL JOINT
COORD	COORDINATE
DEMO	DEMOLISH, DEMOLITION
DTL	DETAIL
DIAG	DIAGONAL
DIA	DIAMETER
DIM	DIMENSION
DN	DOWN
DWG	DRAWING
EA	EACH
E	EAST
ELEC	ELECTRIC(AL)
EMER	EMERGENCY
ENCL	ENCLOSE(URE)
EQ	EQUAL
EQUIP	EQUIPMENT
EXIST	EXISTING
EJ	EXPANSION JOINT
EXT	EXTERIOR
EXP	EXPOSED
FIN	FINISH(ED)
FFL	FINISH FLOOR LEVEL
FE	FIRE EXTINGUISHER
FEC	FIRE EXTINGUISHER CABINET
FLR	FLOOR(ING)
FD	FLOOR DRAIN
FT	FOOT
FTG	FOOTING
FR	FRAME(D), (ING)
FURR	FURRED(ING)
GA	GAGE, GAUGE
GALV	GALVANIZED
GC	GENERAL CONTRACTOR
GL	GLASS, GLAZING
GYP BD	GYPSUM BOARD
HC	HANDICAPPED
HVAC	HEATING/VENTILATING/ AIR CONDITIONING
HT	HEIGHT
HM	HOLLOW METAL
HORIZ	HORIZONTAL
HB	HOSE BIBB
IN	INCH
INSUL	INSULATE(D), (ION)
INT	INTERIOR
JAN	JANITOR
JT	JOINT
LT	LIGHT
LTL	LINTEL
MFR	MANUFACTURE(ER)
MO	MASONRY OPENING
MAX	MAXIMUM
MECH	MECHANIC(AL)
MTL	METAL
MIN	MINIMUM
MISC	MISCELLANEOUS
MTD	MOUNTED
NOM	NOMINAL
N	NORTH
N/A	NOT APPLICABLE
NIC	NOT IN CONTRACT
NTS	NOT TO SCALE
OFF	OFFICE
OC	ON CENTER(S)
OPP	OPPOSITE
OH	OVERHEAD
PTD	PAINTED
PLAM	PLASTIC LAMINATE
PLYWD	PLYWOOD
PVC	POLYVINYL CHLORIDE
PSI	POUNDS PER SQUARE INCH
PSF	POUNDS PER SQUARE FOOT
QTY	QUANTITY
REF	REFERENCE
REINF	REINFORCING
REQ	REQUIRED
REV	REVISION(S), REVISED
R	RISER
RD	ROOF DRAIN
RM	ROOM
RO	ROUGH OPENING
SIM	SIMILAR
STC	SOUND TRANSMISSION
S	SOUTH
SPEC	SPECIFICATION(S)
SQ	SQUARE
SF	SQUARE FEET
SS	STAINLESS STEEL
STD	STANDARD
STL	STEEL
STOR	STORAGE
STR	STRUCTURAL
SUSP	SUSPENDED
THK	THICK(NESS)
T&G	TONGUE AND GROOVE
TO	TOP OF
TYP	TYPICAL
UL	UNDERWRITERS LABORATORY
UNO	UNLESS OTHERWISE NOTED
VERT	VERTICAL
VIF	VERIFY IN FIELD
VCT	VINYL COMPOSITION TILE
WWF	WELDED WIRE FABRIC
W	WEST
W	WIDTH, WIDE
W/	WITH
W/O	WITHOUT
WD	WOOD
BC	BOTTOM OF CURB
BE	BENCH
BW	BOTTOM OF WALL
BOS	BOTTOM OF STAIRS
C–C	CENTER TO CENTER
CB	CONCRETE BASE
DEG	DEGREES
DI	DRAIN INLET
DIA	DIAMETER
DIP	DUCTILE IRON PIPE
DR	DRAIN
EL	ELEVATION
ELEC	ELECTRICAL
EX	EXISTING
FFE	FINISHED FLOOR ELEVATION
FL	FLUSHING HYDRANT
GR	GRATE
HB	HORIZONTAL BEND
HDPE	HIGH–DENSITY POLYETHYLENE
HP	HIGH POINT
IN	ROADWAY INLET
INV	INVERT
IP	INLET PROTECTION
LP	LOW POINT
LOD	LIMIT OF DISTURBANCE
MH	MANHOLE
PERF	PERFORATED
PKG	PARKING
PVC	POLYVINYL CHLORIDE
PVI	POINT OF VERTICAL INTERCEPTION
RCP	REINFORCED CONCRETE PIPE
SAN	SANITARY
SP	SIGNAL PLATE
ST	STORM
STA	STATION
STR	STRUCTURE
T/G	TOP OF GRATE
TC	TOP OF CURB
TCOM	TELECOMMUNICATION
TD	TRENCH DRAIN
TL	TRAFFIC LIGHT
TOS	TOP OF STAIRS
TR	TRASH CAN
TW	TOP OF WALL
TYP	TYPICAL
UG	UNDERGROUND NATURAL GAS

DESIGNED: KMF CADD SY TECH. REVIEW: KMF DATE: 2/26/25	SUB SHEET NO. G1	TITLE OF SHEET DRAWING INDEX GENERAL NOTES INDEPENDENCE NATIONAL HISTORICAL PARK NORTHEAST REGION	DRAWING NO. 391 186675 PMIS/PKG NO. INDE 308228 SHEET 2 OF 41

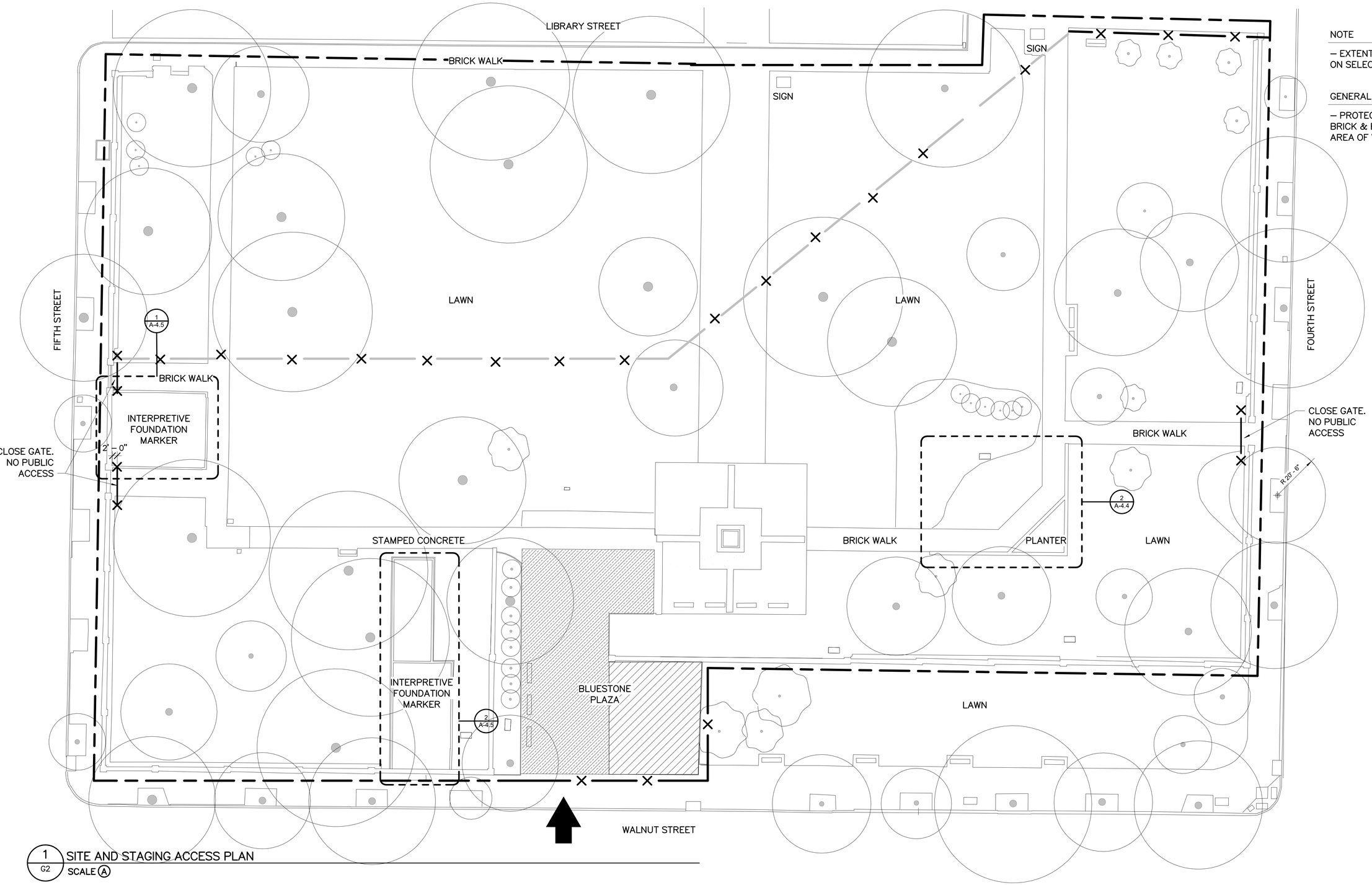

NOTE

– EXTENTS DEPENDENT ON SELECTED OPTIONS.

GENERAL NOTES

– PROTECT ALL GRASS, BRICK & BLUESTONE IN AREA OF WORK WITH MATS.

1 / G2 SITE AND STAGING ACCESS PLAN
SCALE Ⓐ

LEGEND

AVAILABLE STORAGE AREA

AREA OF PROTECTION

APPROXIMATE EXTENTS OF TEMP FENCING. SEE LR–1.1 FOR TREE PROTECTION FENCING EXTENTS.

LIMIT OF WORK AREA

PROJECT NORTH

SCALE Ⓐ

20 0 20 40

SCALE OF FEET

DESIGNED: KF	SUB SHEET NO.	SECOND BANK BLOCK	DRAWING NO.
DADD TC	G2	SITE AND STAGING ACCESS PLAN	391–186675
TECH. REVIEW: KF			PMIS/PKG NO. 308228
DATE: 2/26/25		INDEPENDENCE NATIONAL HISTORICAL PARK	SHEET 3 OF 41

C:\Users\katherinef\Documents\Independence Park Second Bank Block_022025_katherinefFAGFR.rvt

2/27/2025 2:44:18 PM

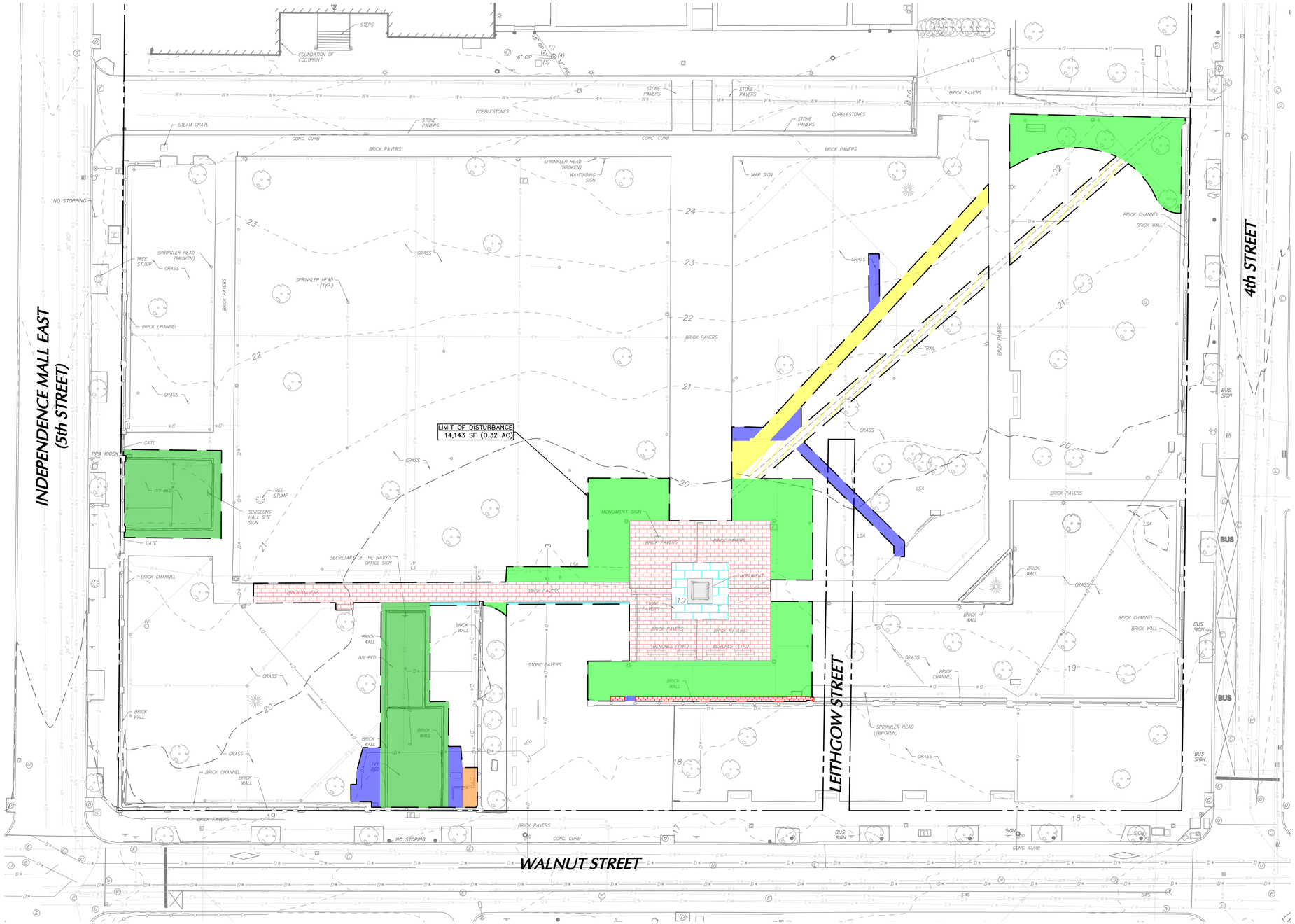

SECOND BANK SITE IMPROVEMENTS	DISTURBANCE AREA (SF)
REPLACE NEW BRICK WALK PAVERS AND PLAZA PAVERS	3,437
REPLACE CONCRETE PAVING WITH NEW BLUESTONE	373
SCULPTURE CONSERVATION	90
LANDSCAPE IMPROVEMENTS AROUND PLAZA AND OLD DESIRE PATH	4,627
RESTORE LAWN OF EXISTING DESIRE PATH	900
3-FT WIDE AGGREGATE DESIRE PATH	782
STORM DRAINAGE IMPROVEMENTS ADJACENT TO NEW WORK	740
BRICK GUTTER IMPROVEMENTS	120
REPOINT AND REPAIR LARGE STEP CRACK WITH HELICAL PIERS	84
SOIL EROSION AND SEDIMENT CONTROL MEASURES	62
RESET SOAPSTONE CAP ON NEW ANCHOR AND REPAIR FLAGSTONE CURB	-
OPTION 1: REPOINT PERIMETER WALLS AND PLANTER SITE WALLS	-
OPTION 2: RECONSTRUCT IVY BEDS & INTERPRETIVE FOUNDATION WALLS	2,928
TOTAL LIMIT OF DISTURBANCE OF ALL SECOND BANK IMPROVEMENTS	**14,143**

NOTES:

1. CONSIDERING THE NATURE OF HISTORICAL PRESERVATION PLANNED FOR THE SITE, DISTURBANCE LIMITS WILL BE COMPLETED IN A SURGICAL MANNER (SAW-CUTTING ALONG JOINTS, RESETTING OF PAVERS, CAREFUL STOCKPILING OF MATERIALS TO BE REUSED IN THE PAVEMENT, ETC.). THEREFORE, THE DISTURBANCE WILL BE LIMITED TO WITHIN THE BORDERS OF THE WORK SHOWN ON THE PLAN.

2. PROTECTION MATTING ATOP PAVED AREAS IS PROVIDED AT PROJECT SITE ACCESS IN LIEU OF A ROCK CONSTRUCTION ENTRANCE. CONSTRUCTION VEHICLES WILL REMAIN ON EXISTING PAVED AREAS OR WITHIN LIMIT OF DISTURBANCE.

3. CONTRACTOR IS SPECIFICALLY CAUTIONED THAT THE LIMIT OF DISTURBANCE IS REQUIRED TO REMAIN UNDER 15,000 SF TO STAY IN COMPLIANCE WITH PWD REGULATIONS. NO ADDITIONAL DISTURBANCE BEYOND WHAT IS SHOWN ON THE PLAN WILL BE PERMITTED.

4. INCLUDED IN THE PROJECT SCOPE ARE LOCATIONS ON-SITE WHERE BRICK PAVERS ARE TO BE RESET TO MEET NEW WORK. THESE AREAS ARE EXCLUDED FROM THE LIMITS OF EARTH DISTURBANCE BECAUSE THE EXISTING SUBBASE WILL NOT BE EXPOSED DURING THE BRICK PAVER RESET. SEE ERSA-102 FOR DETAILS ON SITE IMPROVEMENTS.

20 0 20 40 60
FEET

NORTH

DESIGNED: —	SUB SHEET NO.	SECOND BANK BLOCK	DRAWING NO. — 391
CADD CLC, JMC	C-1.0	SITE DISTURBANCE PLAN	186675
TECH. REVIEW: KJM		INDEPENDENCE NATIONAL HISTORICAL PARK	PMIS/PKG NO. 308228
DATE: 02/26/25			SHEET 4 OF 41

Date: 2/26/2025 Time: 13:02 User: cullen Style Table: Langan.stb Layout: C-1.0 Document Code: 220186301-0501-CB101-0101

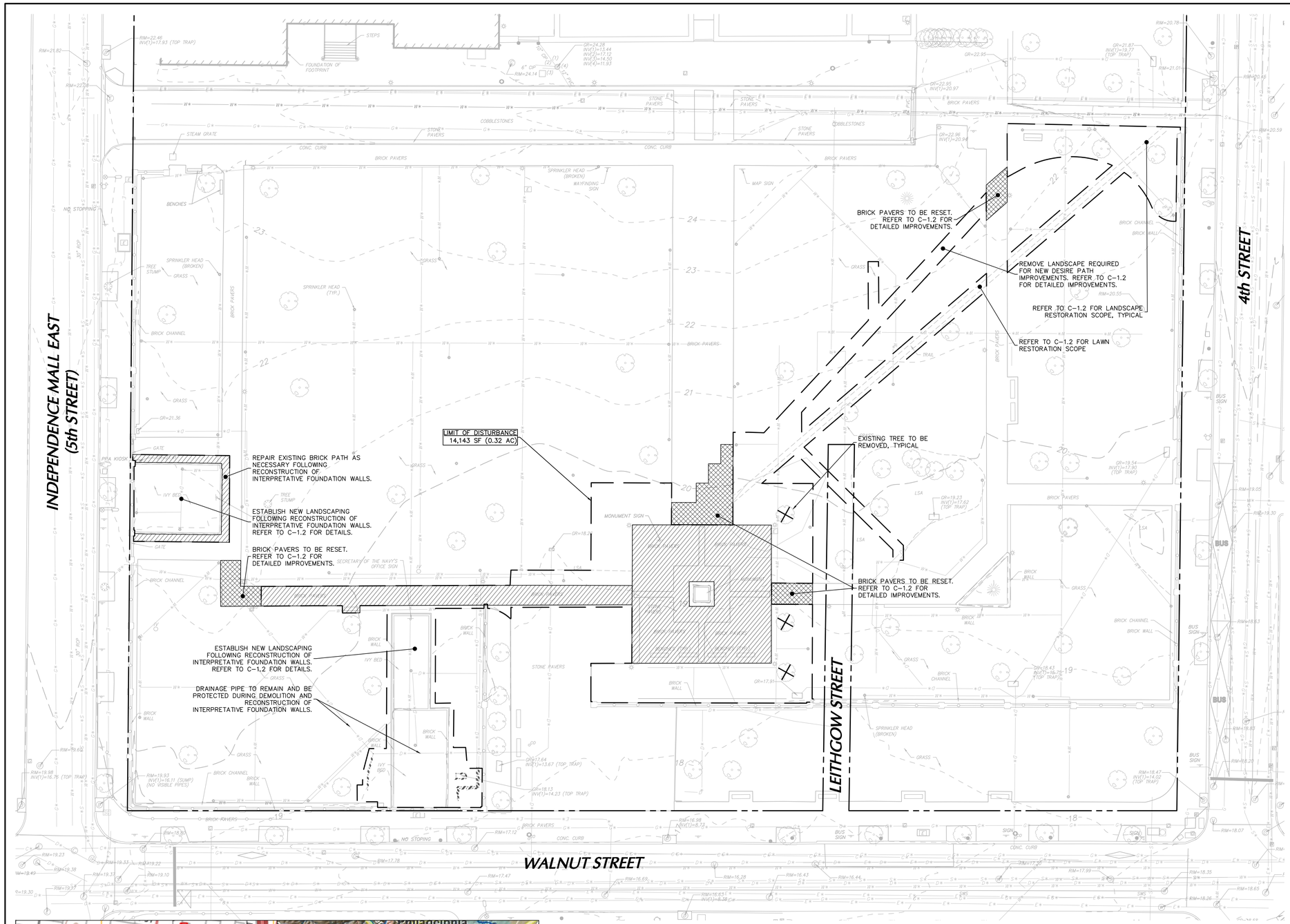

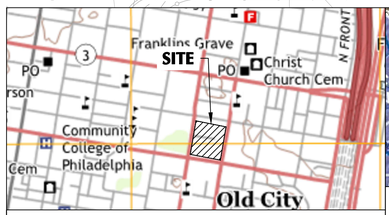

PROJECT LOCATION MAP

SCALE: 1" = 1,000'

SOURCE: USGS

WATERSHED MAP

SCALE: 1" = 15,000'

WATERSHED: DARBY AND COBBS CREEK

SOURCE: PHILADELPHIA WATER DEPARTMENT

GENERAL NOTES

1. THIS DRAWING REFERENCES THE FOLLOWING:

   313 WALNUT STREET, PHILADELPHIA, PA 19106
   OWNER OF RECORD: UNITED STATES OF AMERICA DEPARTMENT OF INTERIOR

   APPLICANT: NATIONAL PARK SERVICE

   SITE ADDRESS: 400–34 CHESTNUT ST
   PHILADELPHIA, PA 19106

2. ZONING DATA:

   SP–PO–A SPECIAL PURPOSE – PARKS AND OPEN SPACE
   USE: GOVERNMENT MUNICIPAL/STATE/FEDERAL

3. LOT IDENTIFICATION:

   OPA ACCOUNT NUMBER: 781050400
   APPROXIMATE GROSS AREA = 4.7

4. THE DELAWARE RIVER IS THE CLOSEST WATERCOURSE TO THE SITE AND IS LOCATED APPROXIMATELY 0.5 MILES EAST OF THE PROJECT SITE.

5. THE SITE IS LOCATED IN THE SOUTHERN DELAWARE RIVER WATERSHED, ACCORDING TO THE PHILADELPHIA WATER DEPARTMENT STORMWATER MANAGEMENT GUIDANCE MANUAL.

6. SITE SOILS ARE CLASSIFIED AS Ub – URBAN LAND.

7. ATTENTION IS CALLED TO THE CURRENT PHILADELPHIA ZONING CODE AS AMENDED. FOR CURRENT AND COMPLETE ZONING INFORMATION, REFER TO ONLINE PHILADELPHIA ZONING CODE.

8. THIS PLAN IS INTENDED FOR PERMITTING PURPOSES ONLY AND IS NOT A CONSTRUCTION DOCUMENT.

9. THE MERIDIAN OF THIS SURVEY IS REFERENCED TO THE CITY OF PHILADELPHIA HORIZONTAL DATUM.

10. ELEVATIONS SHOWN ARE REFERENCED TO THE CITY OF PHILADELPHIA VERTICAL DATUM BASED ON REFERENCE TO THE CITY PLAN ELEVATIONS.

11. STREET NAMES AND ADDRESS ARE SHOWN IN ACCORDANCE WITH THE PHILADELPHIA COUNTY ONLINE MAPPING.

12. PLANIMETRIC AND TOPOGRAPHIC INFORMATION SHOWN HEREON HAS BEEN OBTAINED FROM GROUND SURVEYS BY LANGAN ENGINEERING AND ENVIRONMENTAL SERVICES, INC. DURING JUNE 2023.

13. OFFSETS (IF SHOWN) ARE FOR SURVEY REFERENCES ONLY AND SHOULD NOT BE USED IN CONSTRUCTION OF ANY TYPE.

14. WETLANDS, ENVIRONMENTAL AND/OR HAZARDOUS MATERIALS LOCATION, IF ANY, NOT COVERED UNDER THIS CONTRACT.

15. UNLESS SPECIFICALLY NOTED HEREON, STORM AND SANITARY SEWER INFORMATION (INCLUDING PIPE INVERT, PIPE MATERIAL, AND PIPE SIZE) WAS OBSERVED AND MEASURED AT FIELD LOCATED STRUCTURES (MANHOLES/CATCH BASINS, ETC.) CONDITIONS CAN VARY FROM THOSE ENCOUNTERED AT THE TIMES WHEN AND THE LOCATIONS WHERE DATA WAS OBTAINED. DESPITE MEETING THE REQUIRED STANDARD OF CARE THE SURVEYOR CANNOT AND DOES NOT WARRANT THAT PIPE MATERIAL AND/OR PIPE SIZE THROUGHOUT THE PIPE RUN ARE THE SAME AS THOSE OBSERVED AT EACH STRUCTURE, OR THAT THE PIPE RUN IS STRAIGHT BETWEEN THE LOCATED STRUCTURES.

    ADDITIONAL UTILITY (WATER, GAS, ELECTRIC ETC.) DATA MAY BE SHOWN FROM FIELD LOCATED SURFACE MARKINGS (BY OTHERS), EXISTING STRUCTURES, AND/OR FROM EXISTING DRAWINGS,

    UNLESS SPECIFICALLY NOTED HEREON THE SURVEYOR HAS NOT EXCAVATED TO PHYSICALLY LOCATE THE UNDERGROUND UTILITIES. THE SURVEYOR MAKES NO GUARANTEES THAT THE SHOWN UNDERGROUND UTILITIES ARE EITHER IN SERVICE, ABANDONED OR SUITABLE FOR USE, NOR ARE IN THE EXACT LOCATION OR CONFIGURATION INDICATED HEREON.

16. PRIOR TO ANY DESIGN OR CONSTRUCTION THE PROPER UTILITY AGENCIES MUST BE CONTACTED FOR VERIFICATION OF UTILITY TYPE AND FOR FIELD LOCATIONS.

17. BASED ON FEMA FLOOD PLAIN MAP 4207570184H, THIS SITE IS LOCATED IN FLOOD HAZARD ZONE X (AREAS DETERMINED TO BE OUTSIDE THE 0.2% ANNUAL CHANCE FLOODPLAIN)

LEGEND

EXISTING	DESCRIPTION
	HYDRANT
	MANHOLE (LABELLED AS TYPE)
	WATER VALVE
	GAS VALVE
	SHRUB
	CATCH BASIN
CO	CLEAN OUT
	TREE
	SIGN
	BOLLARD
	ELECTRIC BOX
+322.35	SPOT ELEVATION
CC	CONCRETE CURB
CONC	CONCRETE
RCP	REINFORCED CONCRETE PIPE
DIP	DUCTILE IRON PIPE
CMP	CORRUGATED METAL PIPE
NVP	NO VISIBLE PIPE
EP	EDGE OF PAVEMENT
LSA	LANDSCAPED AREA
(S)	SURVEY BEARING & DISTANCE
(D)	DEED BEARING & DISTANCE
D	STORM DRAIN
S	SANITARY LINE
COMB	COMBINED UTILITY LINE
UNK	UNKNOWN UTILITY LINE
G	GAS LINE
W	WATER LINE
E	ELECTRIC LINE
T	TELEPHONE LINE
C	CABLE TV LINE
ST	STEAM LINE
FM	FORCE MAIN
FO	FIBER OPTIC
(_)*	REFERENCED UTILITY LINE (TYPE AS NOTED) BASED ON RECORD MAPPING
	OVERHEAD WIRE
	GUIDE RAIL(TYPE AS NOTED)
	CHAIN LINK FENCE
	EASEMENT LINE
	RIGHT-OF-WAY LINE
322	CONTOUR LINE
	LIMIT OF DISTURBANCE
	EXISTING SITE FEATURE TO BE REMOVED
	EXISTING TREE TO BE REMOVED
	LIMIT OF IMPERVIOUS DEMOLITION
	BRICK PAVERS TO BE RESET

20 0 20 40 60
FEET

NORTH

DESIGNED: –	SUB SHEET NO.	SECOND BANK BLOCK EXISTING CONDITIONS AND DEMOLITION PLAN INDEPENDENCE NATIONAL HISTORICAL PARK	DRAWING NO. – 391 186675
CADD CLC, JMC	C–1.1		PMIS/PKG NO. 308228
TECH. REVIEW: KJM			SHEET 5 OF 41
DATE: 02/26/25			

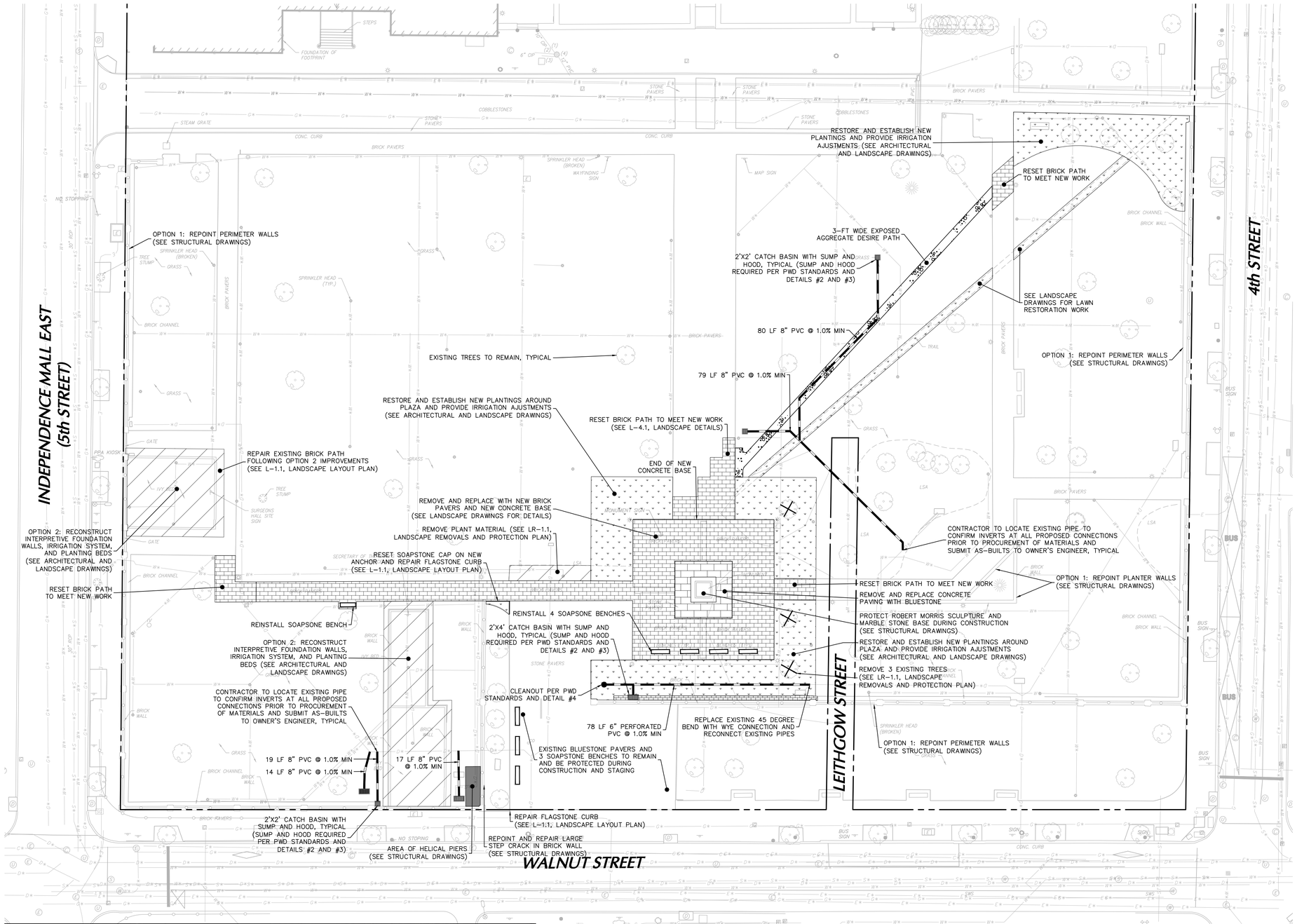

LEGEND

EXISTING	DESCRIPTION
	PROPERTY LINE
322	CONTOUR LINE
S*	SANITARY LINE
G*	GAS LINE
W*	WATER LINE
E*	ELECTRIC LINE
	IRON FENCE
D	STORM LINE
	TREE
	SIGN
D	STORM INLET
E	ELECTRICAL STRUCTURE

PROPOSED	DESCRIPTION
	BLUESTONE PAVERS
	SEEDING/PLANTINGS
	BRICK
	STORMWATER INLET
	STORMWATER PIPE
	AREA OF HELICAL PIERS

PROJECT LOCATION MAP

SCALE: 1" = 1,000'

SOURCE:USGS

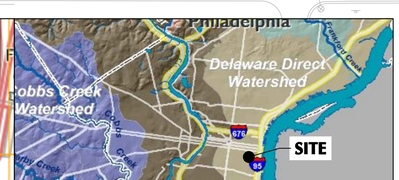

WATERSHED MAP

SCALE: 1" = 15,000'

WATERSHED: DARBY AND COBBS CREEK

SOURCE: PHILADELPHIA WATER DEPARTMENT

20 0 20 40 60 FEET

NORTH

DESIGNED:	SUB SHEET NO.	SECOND BANK BLOCK	DRAWING NO.
CADD CLC, JMC	C-1.2	PROPOSED CONDITIONS PLAN	391 / 186675
TECH. REVIEW: KJM		INDEPENDENCE NATIONAL HISTORICAL PARK	PMIS/PKG NO. 308228
DATE: 02/26/25			SHEET 6 OF 41

Date: 2/26/2025 Time: 13:04 User: ccullen Style Table: Langan.stb Layout: C-1.2 ERSA-102 Document Code: 220186301-0501-CS101-0101

LEGEND

PROPOSED	DESCRIPTION
	INLET PROTECTION
—TPF—	TREE PROTECTION FENCING
	COMPOST FILTER SOCK
	BLUESTONE PROTECTION MAT
	SOIL STOCKPILE
	LIMIT OF DISTURBANCE

INDEPENDENCE MALL EAST (5th STREET)

4th STREET

LEITHGOW STREET

WALNUT STREET

TREE PROTECTION FENCING, TYPICAL

LIMIT OF DISTURBANCE
14,143 SF (0.32 AC)

34 LF 8"ø COMPOST FILTER SOCK
(CFS-5, 198 LF @ 2.0% FLOW LENGTH)

47 LF 8"ø COMPOST FILTER SOCK
(CFS-4, 165 LF @ 3.3% FLOW LENGTH)

58 LF 8"ø COMPOST FILTER SOCK
(CFS-1, 42 LF @ 2.9% FLOW LENGTH)

57 LF 8"ø COMPOST FILTER SOCK
(CFS-2, 77 LF @ 2.2% FLOW LENGTH)

62 LF 8"ø COMPOST FILTER SOCK
(CFS-3, 111 LF @ 3.6% FLOW LENGTH)

PROTECT EXISTING SITE TREES
(SEE LANDSCAPE DRAWINGS)

INLET PROTECTION, TYPICAL

BLUESTONE PAVEMENT PROTECTION MATTING
(SEE LR-1.2, LANDSCAPE PROTECTION DETAILS)

TEMPORARY SIDEWALK PROTECTION
MAT AT CONSTRUCTION ENTRANCE
(SEE LR-1.1, LANDSCAPE REMOVALS
AND PROTECTION PLAN)

SOIL STOCKPILE AND LAYDOWN AREA ON
TOP OF PAVEMENT PROTECTION BOARD.
SURROUND WITH 8"ø COMPOST FILTER SOCK.

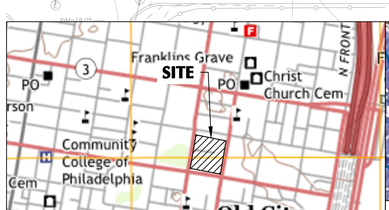

PROJECT LOCATION MAP

SCALE: 1" = 1,000'

SOURCE:USGS

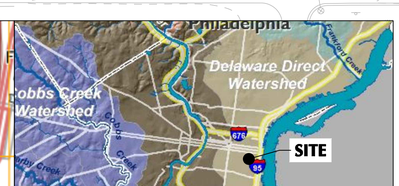

WATERSHED MAP

SCALE: 1" = 15,000'

WATERSHED: DARBY AND COBBS CREEK

SOURCE:
PHILADELPHIA WATER DEPARTMENT

20 0 20 40 60
FEET

NORTH

DESIGNED:	SUB SHEET NO.	SECOND BANK BLOCK	DRAWING NO.
CADD CLC, JMC	C-1.3	SOIL EROSION AND SEDIMENT CONTROL PLAN	391 / 186675
TECH. REVIEW: KJM		INDEPENDENCE NATIONAL HISTORICAL PARK	PMIS/PKG NO. 308228
DATE: 02/26/25			SHEET 7 OF 41

Date: 2/26/2025 Time: 13:04 User: cullen Style Table: Langan.stb Layout: C-1.3 Document Code: 220186301-0501-CE101-0101

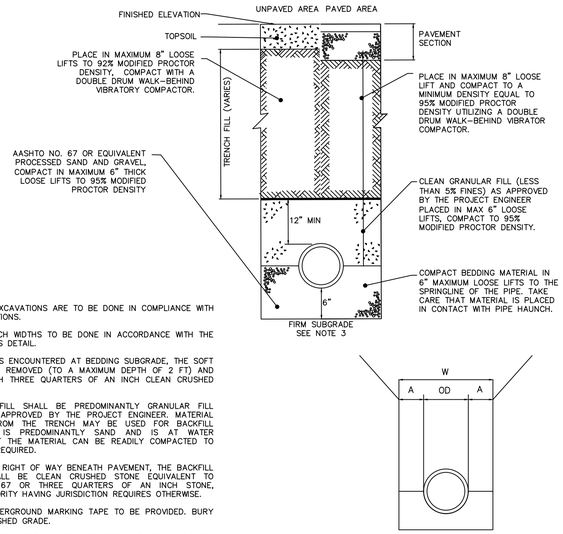

NOTES:

1. ALL TRENCH EXCAVATIONS ARE TO BE DONE IN COMPLIANCE WITH OSHA REGULATIONS.
2. MINIMUM TRENCH WIDTHS TO BE DONE IN ACCORDANCE WITH THE CHART ON THIS DETAIL.
3. IF SOFT SOIL IS ENCOUNTERED AT BEDDING SUBGRADE, THE SOFT SOIL IS TO BE REMOVED (TO A MAXIMUM DEPTH OF 2 FT) AND REPLACED WITH THREE QUARTERS OF AN INCH CLEAN CRUSHED STONE.
4. TRENCH BACKFILL SHALL BE PREDOMINANTLY GRANULAR FILL MATERIAL AS APPROVED BY THE PROJECT ENGINEER. MATERIAL EXCAVATED FROM THE TRENCH MAY BE USED FOR BACKFILL PROVIDED IT IS PREDOMINANTLY SAND AND IS AT WATER CONTENT THAT THE MATERIAL CAN BE READILY COMPACTED TO THE DENSITY REQUIRED.
5. WITHIN PUBLIC RIGHT OF WAY BENEATH PAVEMENT, THE BACKFILL MATERIAL SHALL BE CLEAN CRUSHED STONE EQUIVALENT TO AASHTO NO. 67 OR THREE QUARTERS OF AN INCH STONE, UNLESS AUTHORITY HAVING JURISDICTION REQUIRES OTHERWISE.
6. MAGNETIC UNDERGROUND MARKING TAPE TO BE PROVIDED. BURY 18" FROM FINISHED GRADE.
7. IN AREAS WHERE THERE IS NOT SUFFICIENT WIDTH FOR A DOUBLE DRUM WALK-BEHIND VIBRATORY COMPACTOR THE LIFT THICKNESS SHALL BE DECREASED AS NECESSARY TO ACHIEVE COMPACTION WITH APPROPRIATE EQUIPMENT.
8. MAXIMUM PARTICLE SIZE FOR TRENCH BACKFILL SHALL BE 4 INCHES UNLESS APPROVED OTHERWISE BY PROJECT ENGINEER.
9. BACKFILL CONTAIN NO DELETERIOUS OR CONTAMINATED MATERIAL.

PIPE DIAMETER "D"	MINIMUM "A"
6" TO 15"	8"
16" TO 21"	10"

1 PIPE TRENCH DETAIL FOR STORM PIPES
NOT TO SCALE

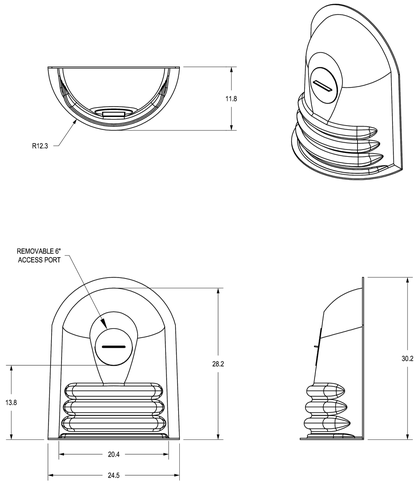

NOTES:

1. ALL HOODS SHALL BE CONSTRUCTED OF POLYETHYLENE.
2. THE SIZE AND POSITION OF THE HOOD SHALL BE DETERMINED BY THE OUTLET PIPE SIZE AS PER MANUFACTURER'S RECOMMENDATION.
3. THE BOTTOM OF THE HOOD SHALL EXTEND DOWNWARD A MINIMUM DISTANCE OF 6" (15 CM) FOR PIPES < 12" (30 CM).
4. INSTALLATION HARDWARE AND INSTRUCTIONS SHALL BE PROVIDED BY MANUFACTURER.
5. INSTALLATION SHALL BE IN ACCORDANCE WITH NYLOPLAST INSTALLATION PROCEDURES AND THOSE ISSUES BY LOCAL BUILDING/CONSTRUCTION REGULATIONS.
6. SUMP DEPTH OF 36" MINIMUM FOR 12" OR SMALLER DIAMETER OUTLET PIPE. FOR 15" OR LARGER OUTLETS USE 2.5-3X OUTLET DIAMETER.

2 WATER QUALITY HOOD
NOT TO SCALE

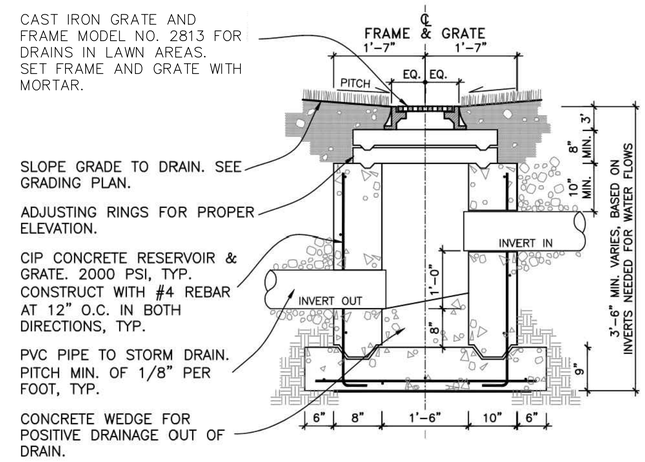

3 SECTION: CATCH BASIN FRAME & GRATE
NOT TO SCALE

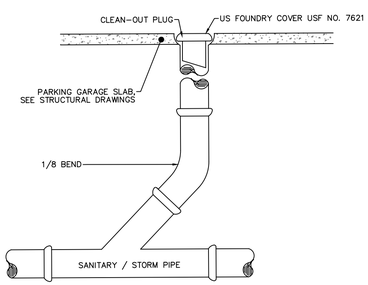

4 CLEANOUT DETAIL
NOT TO SCALE

DESIGNED: –	SUB SHEET NO.	SECOND BANK BLOCK	DRAWING NO. – 391 186675
GADD CLC, JMC	C-5.1	SITE AND DRAINAGE DETAILS	PMIS/PKG NO. 308228
TECH. REVIEW: KJM		INDEPENDENCE NATIONAL HISTORICAL PARK	SHEET 8 OF 41
DATE: 02/26/25			

Date: 2/26/2025 Time: 13:05 User: ccullen Style Table: Langan.stb Layout: C-5.1 Document Code: 220186301-0501-CS501-0101

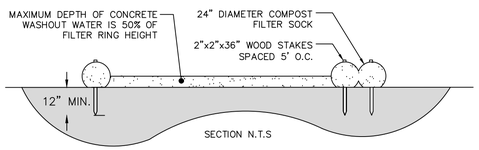

NOTES:
1. INSTALL ON FLAT GRADE FOR OPTIMUM PERFORMANCE
2. 18" DIAMETER FILTER SOCK MAY BE STACKED ONTO DOUBLE 24" DIAMETER SOCKS IN PYRAMIDAL CONFIGURATION FOR ADDED HEIGHT.
3. A SUITABLE IMPERVIOUS GEOMEMBRANE SHALL BE PLACED AT THE LOCATION OF THE WASHOUT PRIOR TO INSTALLING THE SOCKS.

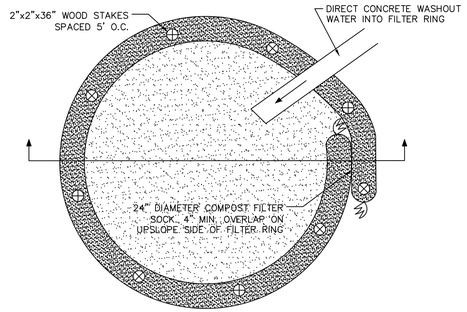

1 CONCRETE WASHOUT AREA DETAIL (TO BE INSTALLED AS NECESSARY)
NOT TO SCALE

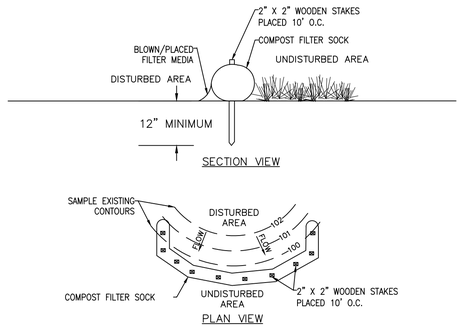

NOTES:
1. SOCK FABRIC SHALL MEET STANDARDS OF TABLE 4.1. COMPOST SHALL MEET THE STANDARDS OF TABLE 4.2.
2. COMPOST FILTER SOCK SHALL BE PLACED AT EXISTING LEVEL GRADE. BOTH ENDS OF THE SOCK SHALL BE EXTENDED AT LEAST 8 FEET UP SLOPE AT 45 DEGREES TO THE MAIN SOCK ALIGNMENT ON FIGURE 4.2. STAKES MAY BE INSTALLED IMMEDIATELY DOWNSLOPE OF THE IF SO SPECIFIED BY THE MANUFACTURER.
3. TRAFFIC SHALL NOT BE PERMITTED TO CROSS FILTER SOCKS.
4. ACCUMULATED SEDIMENT SHALL BE REMOVED WHEN IT REACHES HALF THE ABOVEGROUND HEIGHT OF THE SOCK AND DISPOSED IN THE MANNER DESCRIBED ELSEWHERE IN THE PLAN.
5. SOCKS SHALL BE INSPECTED WEEKLY AND AFTER EACH RUNOFF EVENT. DAMAGED SOCKS SHALL BE REPAIRED ACCORDING TO MANUFACTURER'S SPECIFICATIONS OR REPLACED WITHIN 24 HOURS OF INSPECTION.
6. BIODEGRADABLE FILTER SOCKS SHALL BE REPLACED AFTER 6 MONTHS: PHOTODEGRADABLE SOCK AFTER 1 YEAR. POLYPROPYLENE SOCKS SHALL BE REPLACED ACCORDING TO MANUFACTURER'S RECOMMENDATIONS.
7. UPON STABILIZATION OF THE AREA TRIBUTARY TO THE SOCK, STAKES SHALL BE REMOVED. THE SOCK MAY BE LEFT IN PLACE AND VEGETATED OR REMOVED. IN THE LATTER CASE, THE MESH SHALL BE CUT OPEN AND THE MULCH SPREAD AS A SOIL SUPPLEMENT.
8. COMPOST FILTER SOCK MATERIAL SHALL BE BIODEGRADABLE. PROVIDE SUBMITTAL TO OWNER'S ENGINEER FOR REVIEW.
9. SOME OBJECT OF CONSIDERABLE MASS (I.E. CONCRETE BLOCKS, SAND BAGS, ETC.) MUST BE IMMEDIATELY DOWNSLOPE OF COMPOST FILTER SOCKS ON PAVED SURFACES AT 10' ON CENTER INTERVALS IN ORDER TO HELP HOLD THEM IN PLACE.

COMPOST SOCKS SHALL BE REPAIRED OR REPLACED IF THEY SHOW SIGNS OF UNDERMINING, OR DETERIORATION. COMPOST SOCK SHALL BE CLEANED AND RID OF SEDIMENT WHEN SEDIMENT TRAPPED BY THE COMPOST SOCK BUILDS UP TO ONE-HALF ITS DEPTH/DIAMETER.

USE

Compost Sock Fabric Minimum Specifications

Material Type	3 mil HDPE	5 mil HDPE	5 mil HDPE	Multi-Filament Polypropylene (MFPP)	Heavy Duty Multi-Filament Polypropylene (HDMFPP)
Material Characteristics	Photo-degradable	Photo-degradable	Bio-degradable	Photo-degradable	Photo-degradable
Sock Diameters	12" 18"	12" 18" 24" 32"	12" 18" 24" 32"	12" 18" 24" 32"	12" 18" 24" 32"
Mesh Opening	3/8"	3/8"	3/8"	3/8"	1/8"
Tensile Strength		26 psi	26 psi	44 psi	202 psi
Ultraviolet Stability % Original Strength (ASTM G-155)	23% at 1000 hr.	23% at 1000 hr.		100% at 1000 hr.	100% at 1000 hr.
Minimum Functional Longevity	6 months	9 months	6 months	1 year	2 years
Two-ply systems					
Inner Containment Netting				HDPE biaxial net	
				Continuously wound	
				Fusion-welded junctures	
				3/4" X 3/4" Max. aperture size	
Outer Filtration Mesh				Composite Polypropylene Fabric (Woven layer and non-woven fleece mechanically fused via needle punch)	
				3/16" Max. aperture size	
Sock fabrics composed of burlap may be used on projects lasting 6 months or less.					

Filtrexx & JMD

TABLE 4.1

Compost Standards

Organic Matter Content	80% - 100% (dry weight basis)
Organic Portion	Fibrous and elongated
pH	5.5 - 8.0
Moisture Content	35% - 55%
Particle Size	98% pass through 1" screen
Soluble Salt Concentration	5.0 dS/m (mmhos/cm) Maximum

TABLE 4.2

3 COMPOST FILTER SOCK DETAIL
NOT TO SCALE

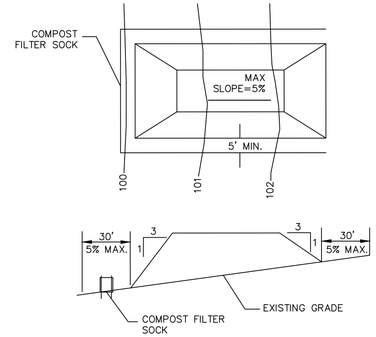

NOTES
1. PLACE STOCKPILES AT LOCATIONS AS SHOWN ON THE SOIL EROSION AND SEDIMENT CONTROL PLAN.
2. ALL SIDE SLOPES SHALL BE 3H: 1V OR FLATTER.
3. STOCKPILED MATERIAL SHALL BE STAGED ON AND COVERED WITH 10 MIL (MIN.) POLYETHYLENE SHEETING.
4. ALL STOCKPILED MATERIALS SHALL BE COVERED AT THE END OF EACH WORK-DAY, AND THE POLYETHYLENE SHEETING SHALL BE ANCHORED SECURELY SO THAT IT WILL NOT BE BLOWN OUT OF PLACE.
5. COMPOST FILTER SOCK SHALL BE INSTALLED AS DETAILED HEREON.

4 SOIL STOCKPILE DETAIL
NOT TO SCALE

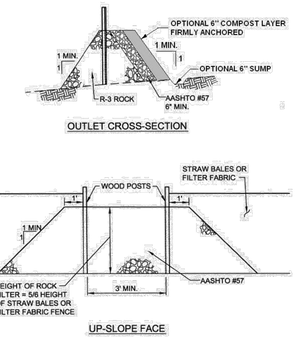

PA DEP

A rock filter outlet shall be installed where failure of a silt fence or straw bale barrier has occurred due to concentrated flow. Anchored compost layer shall be used on upslope face in HQ and EV watersheds.

Sediment shall be removed when accumulations reach 1/3 the height of the outlet.

6 ROCK FILTER OUTLET DETAIL
NOT TO SCALE

STANDARD CONSTRUCTION DETAIL # 3-16
Pumped Water Filter Bag

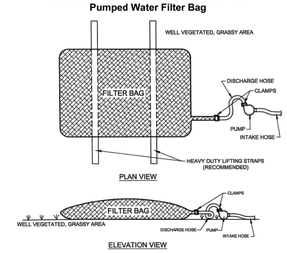

LOW VOLUME FILER BAGS SHALL BE MADE FROM NON-WOVEN GEOTEXTILE MATERIAL SEWN WITH HIGH STRENGTH, DOUBLE STITCHED "J" TYPE SEAMS. THEY SHALL BE CAPABLE OF TRAPPING PARTICLES LARGER THAN 150 MICRONS. HIGH VOLUME FILTER BAGS SHALL BE MADE FROM WOVEN GEOTEXTILES THAT MEET THE FOLLOWING STANDARDS:

Property	Test Method	Minimum Standard
Avg. Wide Width Strength	ASTM D-4884	60 lb/in
Grab Tensile	ASTM D-4632	205 lb
Puncture	ASTM D-4833	110 lb
Mullen Burst	ASTM D-3786	350 psi

A SUITABLE MEANS OF ACCESSING THE BAG WITH MACHINERY REQUIRED FOR DISPOSAL PURPOSES SHALL BE PROVIDED. FILTER BAGS SHALL BE REPLACED WHEN THEY BECOME ⅔ FULL OF SEDIMENT. SPARE BAGS SHALL BE KEPT AVAILABLE FOR REPLACEMENT OF THOSE THAT HAVE FAILED OR ARE FILLED. BAGS SHALL BE PLACED ON STRAPS TO FACILITATE REMOVAL UNLESS BAGS COME WITH LIFTING STRAPS ALREADY ATTACHED.

BAGS SHALL BE LOCATED IN WELL-VEGETATED (GRASSY) AREA, AND DISCHARGE ONTO STABLE, EROSION RESISTANT AREAS. WHERE THIS IS NOT POSSIBLE, A GEOTEXTILE UNDERLAYMENT AND FLOW PATH SHALL BE PROVIDED. BAGS MAY BE PLACED ON FILTER STONE TO INCREASE DISCHARGE CAPACITY. BAGS SHALL NOT BE PLACED ON SLOPES GREATER THAN 5%. FOR SLOPES EXCEEDING 5%, CLEAN ROCK OR OTHER NON-ERODIBLE AND NON-POLLUTING MATERIAL MAY BE PLACED UNDER THE BAG TO REDUCE SLOPE STEEPNESS.

NO DOWNSLOPE SEDIMENT BARRIER IS REQUIRED FOR MOST INSTALLATIONS. COMPOST BERM OR COMPOST FILTER SOCK SHALL BE INSTALLED BELOW BAGS LOCATED IN HQ OR EV WATERSHEDS, WITHIN 50 FEET OF ANY RECEIVING SURFACE WATER OR WHERE GRASSY AREA IS NOT AVAILABLE.

THE PUMP DISCHARGE HOSE SHALL BE INSERTED INTO THE BAGS IN THE MANNER SPECIFIED BY THE MANUFACTURER AND SECURELY CLAMPED. A PIECE OF PVC PIPE IS RECOMMENDED FOR THIS PURPOSE.

THE PUMPING RATE SHALL BE NO GREATER THAN 750 GPM OR ½ THE MAXIMUM SPECIFIED BY THE MANUFACTURER, WHICHEVER IS LESS. PUMP INTAKES SHALL BE FLOATING AND SCREENED.

FILTER BAGS SHALL BE INSPECTED DAILY. IF ANY PROBLEM IS DETECTED, PUMPING SHALL CEASE IMMEDIATELY AND NOT RESUME UNTIL THE PROBLEM IS CORRECTED.

5 PUMPED WATER FILTER BAG DETAIL (TO BE INSTALLED AS NECESSARY)
NOT TO SCALE

STANDARD CONSTRUCTION DETAIL #4-16
FILTER BAG INLET PROTECTION - TYPE M INLET

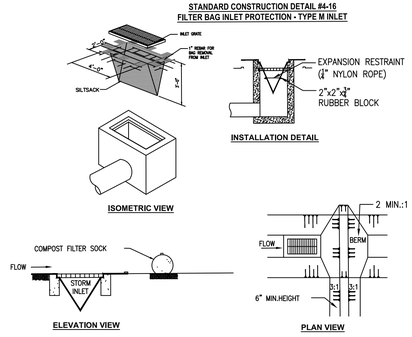

NOTES:
1. MAXIMUM DRAINAGE AREA ½ ACRE.
2. INLET PROTECTION IS NOT REQUIRED FOR INLET TRIBUTARY TO SEDIMENT BASIN OR TRAP. BERMS REQUIRED FOR ALL INSTALLATIONS
3. EARTHEN BERM IN ROADWAY SHALL BE MAINTAINED UNTIL ROADWAY IS STONED. ROAD SUBBASE BERM ON ROADWAY SHALL BE MAINTAINED UNTIL ROADWAY I SPAVED. EARTHEN BERM IN CHANNEL SHALL BE MAINTAINED UNTIL PERMANENT STABILIZATION IS COMPLETED OR TO REMAIN PERMANENTLY.
4. AT A MINIMUM, THE FABRIC SHALL HAVE A MINIMUM GRAB TENSILE STRENGTH OF 120LBS., A MINIMUM BURST STRENGTH OF 200 PSI., AND A MINIMUM TRAPEZOIDAL TEAR STRENGHT OF 50LBS. FILTER BAGS SHALL BE CAPAPBLE OF TRAPPING ALL PARTICLES NOT PASSING A NO.40 SIEVE.
5. INLET FILTER BAGS SHALL BEINSPECTED ON A WEEKLY BASIS AND AFTER EACH RUNOFF EVENT. BAGS SHALL BE EMPTIED AND RINSED OR REPLACED WHEN ½ FULL OR WHEN FLOW CAPACITY HAS BEEN REDUCED SO AS TO CAUSE FLOODING BY PASSING OF THE INLET. DAMAGED OR CLOGGED BAGS SHALL BE REPLACED. A SUPPLY SHALL BE MAINTAINED ON SITE FOR REPLACEMENT OF BAGS. ALL NEEDED REPAIRS SHALL BE INITIATED IMMEDIATELY AFTER THE INSPECTION. DISPOSE ACCUMULATED SEDIMENT AS WELL AS ALL USED BAGS ACCORDING TO THE PLAN NOTES.
6. DO NOT USE ON MAJOR PAVED ROADWAYS WHERE PONDING MY CAUSE TRAFFIC HAZARDS.

(363-2134-008/DRAFT OCTOBER 17,2009/PAGE 80)

2 INLET PROTECTION DETAIL
NOT TO SCALE

DESIGNED: CLC, JMC	SUB SHEET NO. C-5.2	SECOND BANK BLOCK SOIL EROSION & SEDIMENT CONTROL DETAILS INDEPENDENCE NATIONAL HISTORICAL PARK	DRAWING NO. 391 / 186675
TECH. REVIEW: KJM			PMIS/PKG NO. 308228
DATE: 02/26/25			SHEET 9 OF 41

Date: 2/26/2025 Time: 13:05 User: ccullen Style Table: Langan.stb Layout: C-5.2 Document Code: 220186301-0501-CS501-0101

GRADING AND DRAINAGE NOTES

1. PROVIDE POSITIVE DRAINAGE AWAY FROM ALL STRUCTURES.
2. EXCAVATION IS UNCLASSIFIED AND INCLUDES EXCAVATION TO SUBGRADE ELEVATION INDICATED, REGARDLESS OF CHARACTER OF MATERIALS OF OBSTRUCTIONS ENCOUNTERED.
3. GRADES ON ALL PAVED WALKWAYS SHALL COMPLY WITH THE PROVISIONS OF THE AMERICANS WITH DISABILITIES ACT.
4. UNLESS OTHERWISE NOTED, MINIMUM SLOPE SHALL BE ¼ INCH PER FOOT OR 2% AND A MAXIMUM SLOPE SHALL NOT EXCEED 3:1 (H:V) OR 33% FOR NON-PAVED SURFACES.
5. GRADE EARTHEN, NON-PAVED, SURFACES TO A SMOOTH FINISH. SLOPE LAWN AREAS IN SWALES TO A GENTLE CROWN ALONG THE CENTERLINE UNLESS OTHERWISE SHOWN.
6. GRADE ALL SEEDED FINE LAWN AREAS FLUSH WITH FINISH GRADE. ADJUST FINISHED GRADE TO THE PROPER DEPTH WHERE SOD ABUTS PAVED AREAS.
7. GRADE ALL TREE/SHRUB/GROUNDCOVER PLANTING BEDS TO 3 INCHES BELOW TOP OF ABUTTING CURBS, PAVING, OR LAWN AREAS TO ALLOW FOR MULCHING.
8. REFER TO PLANTING NOTES AND DETAILS FOR ADDITIONAL NOTES.
9. ADJUST EXISTING AND NEW MANHOLE, CATCH BASINS, AND DRAINS RIM/GRATE ELEVATIONS TO NEW GRADE ELEVATIONS (PAVEMENT OR SOIL).
10. ELIMINATE ROUGH AND LOW AREAS TO ENSURE POSITIVE DRAINAGE.
11. FINISHED SURFACES SHALL BE GRADED SMOOTH AND EVEN WITH NO ABRUPT OR AWKWARD CHANGES IN GRADE. SURFACE FINISHES NOT MEETING THIS STANDARD OR NOT DEEMED ACCEPTABLE BY THE DESIGNER OR OWNER SHALL BE CORRECTED AT THE CONTRACTOR'S EXPENSE.
12. NOTIFY THE LANDSCAPE ARCHITECT IMMEDIATELY IF SLOPE REQUIREMENTS CANNOT BE MET. AT NO TIME WILL SLOPES IN EXCESS OF THOSE ABOVE THE MAXIMUM ALLOWED WILL BE ACCEPTED, UNLESS PRIOR APPROVAL IS RECEIVED IN WRITING BY THE DESIGNER.
13. PLANS INDICATE ALL FINISH GRADE ELEVATIONS. PROVIDE SUBGRADE ELEVATIONS AS REQUIRED BY PLANS, DETAILS, OR SPECIFICATIONS. PROVIDE PROPERLY COMPACTED SUBGRADES OF NATIVE SOIL OR APPROVED FILL. SUBGRADES SHALL BE INSPECTED BY A QUALIFIED INSPECTOR TO ENSURE COMPACTION REQUIREMENTS ARE MET. NATIVE SOILS, FILL, OR SUBGRADES DEEMED INSUFFICIENT SHALL BE REMOVED AND REPLACED WITH APPROPRIATE MATERIAL.
14. COORDINATE GRADING WORK WITH WORK OF OTHER TRADES OR WORK BY OTHERS AS REQUIRED TO COMPLETE THE PROJECT.
15. REFER TO CLEAN FILL REQUIREMENTS NOTES ON THIS DRAWING FOR INFORMATION ON CLEAN FILL IMPORT AND EXPORT.
16. EXCAVATION SHALL BE PERFORMED SO AS NOT TO DISTURB EXISTING ADJACENT BUILDINGS, STREETS, AND UTILITY LINES. VERIFY LOCATION OF ALL UTILITIES PRIOR TO COMMENCEMENT OF WORK. HAND EXCAVATE AROUND UTILITIES AS REQUIRED.
17. COMPACT SOILS TO NOT LESS THAN THE FOLLOWING PERCENTAGES OF MAXIMUM DENSITY OF MODIFIED PROCTOR (ASTM D1557):
    - UNDER FOUNDATIONS, PAVING, AND SLABS – 95%
    - UNDER EARTHEN SURFACES/LAWN/LANDSCAPING – 85%
18. BACKFILL SHALL BE BROUGHT UP BY EQUALLY ON EACH SIDE OF FOUNDATIONS, WALLS, AND GRADE BEAMS.
19. ALL ORGANIC, WET, SOFT AND/OR UNSUITABLE MATERIALS SHALL BE REMOVED FROM PAVEMENT SUBGRADE AND BACKFILLED WITH SUITABLE GRANULAR, FREE DRAINING MATERIAL. NO PAVEMENTS OR SLABS SHALL BE PLACED ONTO SUBGRADE CONTAINING FREE WATER, FROST OR ICE. SHOULD WATER OR FRONT ENTER AN EXPOSED EXCAVATION AFTER SUBGRADE APPROVAL, THE SUBGRADE SHALL BE REINSPECTED BY THE INDEPENDENT TESTING AND INSPECTION AGENCY AFTER REMOVAL OF WATER OR FROST.
20. COMPACTED SUBGRADE IS TO INCLUDE THE SOIL MATERIALS SUPPORTING STRUCTURAL FILLS, FOUNDATIONS, SLABS, PITS, STRUCTURES, PAVEMENTS, WALKS, ETC. THE SUITABILITY OF SUBGRADE IS TO BE DETERMINED BY PROOF-ROLLING OR SOILS TESTING PRIOR TO FURTHER CONSTRUCTION.
21. EXCAVATE TO THE LINES AND GRADES SHOWN AND TEST AND PROOF-ROLL ALL SURFACES WITHIN AREAS QUALIFIED AS COMPACTED SUBGRADE.
22. THE BOTTOMS OF TRENCHES, FOUNDATION AND PAVEMENT SUBGRADES SHALL BE COMPACTED TO THE SATISFACTION OF THE INSPECTOR. IF UNSUITABLE MATERIALS OR INSUFFICIENT BEARING CAPACITY IS ENCOUNTERED IN IN-SITU MATERIALS, CARRY EXCAVATIONS DEEPER AS DIRECTED BY THE INSPECTOR AND WITH APPROVAL OF THE OWNER AND REPLACE WITH COMPACTED BACKFILL MATERIAL.
23. THE CONTRACTOR SHALL MAINTAIN ANY EXISTING DRAINAGE STRUCTURES AND PIPING WHICH MAY STILL DRAIN ANY AREAS NOT COMPENSATED BY THE PROPOSED DRAINAGE SYSTEM. IF ANY PIPES OR STRUCTURES THAT NEED TO BE REPLACED OR REROUTED OUTSIDE OF THE EXTENTS OF THE PLANS ARE FOUND, THE CONTRACTOR IS RESPONSIBLE FOR MAINTAINING DRAINAGE FLOW WITHIN THE SITE AND MAY NEED TO INSTALL TEMPORARY FACILITIES TO MAINTAIN PHASING.
24. ALL EARTHWORK AND UNDERGROUND UTILITY FOUNDATION WORK SHALL BE COORDINATED WITH THE REQUIREMENTS OUTLINED BY THE CIVIL ENGINEER, IF APPLICABLE. ANY SPECIAL HANDLING PROCEDURES AND PRECAUTIONARY MEASURES NECESSARY DURING CONSTRUCTION SHALL BE ADHERED TO BY THE SITE CONTRACTOR.
25. CONTRACTOR TO PLUG ALL ABANDONED PIPES.
26. CONTRACTOR TO VERIFY GRADING FOR ALL NEW SURFACES BY STAKING OUT PROPOSED ELEVATIONS BEFORE CONSTRUCTION AND NOTIFYING CONTRACTING OFFICER'S REPRESENTATIVE IMMEDIATELY IF ANY PROPOSED SURFACES WILL EXCEED ADA SLOPE ALLOWANCES.

PWD EROSION AND SEDIMENT CONTROL NOTES

1. ALL SEDIMENT AND EROSION CONTROL PRACTICES (BMP'S) ARE TO BE CONSTRUCTED, STABILIZED, AND FUNCTIONAL PRIOR TO ANY SOIL DISTURBANCE IN THEIR PROPER SEQUENCE WITHIN THE TRIBUTARY AREAS OF THOSE BMP'S AND MAINTAINED UNTIL PERMANENT PROTECTION IS ESTABLISHED.
2. UPON COMPLETION OR TEMPORARY CESSATION OF THE EARTH DISTURBANCE ACTIVITY, OR ANY STAGE THEREOF, THE PROJECT SITE SHALL BE STABILIZED IMMEDIATELY. ANY DISTURBED AREAS NOT SUBJECT TO CONSTRUCTION TRAFFIC AND LEFT EXPOSED SHALL BE IMMEDIATELY STABILIZED WITH TEMPORARY SEEDING. THE DISTURBED AREAS WILL BE MULCHED WITH UNROTTED STRAW AT A MINIMUM RATE OF 1,200 LBS PER 1,000 SQUARE YARDS OR AN EQUIVALENT MEASURE ACCORDING TO STATE STANDARDS. SEE STABILIZATION MATERIALS BELOW.
3. PERMANENT VEGETATION TO BE IMMEDIATELY SEEDED OR SODDED ON ALL EXPOSED AREAS AFTER FINAL GRADING. MULCH TO BE USED AT A RATE OF 1,200 LBS PER 1,000 SQUARE YARDS FOR PROTECTION UNTIL SEEDING IS ESTABLISHED. SEE SEEDING MIXTURE BELOW.
4. ALL WORK SHALL BE DONE IN ACCORDANCE WITH PENNSYLVANIA EROSION AND SEDIMENT POLLUTION CONTROL MANUAL.
5. ALL EARTH DISTURBANCES, INCLUDING CLEARING AND GRUBBING, AS WELL AS CUTS AND FILLS, SHALL BE DONE IN ACCORDANCE WITH THE APPROVED EROSION AND SEDIMENT CONTROL PLAN. A COPY OF THE APPROVED DRAWINGS MUST BE AVAILABLE AT THE PROJECT SITE AT ALL TIMES. PWD SHALL BE NOTIFIED OF ANY CHANGES TO THE APPROVED PLAN PRIOR TO THE IMPLEMENTATION OF THOSE CHANGES. PWD MAY REQUIRE A WRITTEN SUBMITTAL OF THOSE CHANGES FOR REVIEW AND APPROVAL AT ITS DISCRETION.
6. PRIOR TO ANY SITE GRADING, DRAINAGE FACILITIES SHALL BE INSTALLED TO ALLOW FOR THE MAJORITY OF STORM FLOW TO BE TRANSPORTED TO THE PROPOSED OUTLET WITHOUT ERODING THE SITE.
7. IMMEDIATELY AFTER EARTH DISTURBANCE ACTIVITIES CEASE IN ANY AREA OR SUBAREA OF THE PROJECT, THE OPERATOR SHALL STABILIZE ALL DISTURBED AREAS. DURING NON-GERMINATING MONTHS, MULCH OR PROTECTIVE BLANKETING SHALL BE APPLIED AS DESCRIBED IN THE PLAN. AREAS NOT AT FINISHED GRADE, WHICH WILL BE REACTIVATED WITHIN 1 YEAR, MAY BE STABILIZED IN ACCORDANCE WITH THE TEMPORARY STABILIZATION SPECIFICATIONS. THOSE AREAS WHICH WILL NOT BE REACTIVATED WITHIN 1 YEAR SHALL BE STABILIZED IN ACCORDANCE WITH THE PERMANENT STABILIZATION SPECIFICATIONS.
8. ALL INLETS NOT TO BE USED AS SEDIMENT TRAPS, SHALL BE TEMPORARILY PROTECTED BY FILTERS PLACED IMMEDIATELY AFTER THEIR CONSTRUCTION. FILTER SHALL REMAIN IN PLACE UNTIL SITE IS PERMANENTLY STABILIZED.
9. INLET PROTECTION SHOULD BE PROVIDED FOR ALL INLETS OWNED BY PWD THAT ARE LOCATED WITHIN ONE BLOCK OF THE PROJECT SITE.
10. ALL DISTURBED AREAS SHALL BE LIMED OR FERTILIZED IN ACCORDANCE WITH HORTICULTURAL PRACTICES PRIOR TO EITHER TEMPORARY OR PERMANENT SEEDING.
11. STABILIZATION MATERIALS:

    TEMPORARY SEEDING
    A) THE SURFACES OF EXPOSED EARTH AREAS NOT SUBJECT TO CONSTRUCTION SHALL BE TEMPORARILY SEEDED AND MULCHED.
    B) SEEDING SHALL OCCUR IMMEDIATELY AFTER THE ESTABLISHMENT OF ROUGH GRADED AREAS. THE FOLLOWING SEED SHALL BE PLANTED: RYEGRASS – BLUE TAG CERTIFIED – 100% – 4 TO 5 LBS. PER 1,000 SQUARE FEET. ANNUAL TYPE – TYPICAL, PERENNIAL TYPE – NOT APPLICABLE
    C) PREPARE ALL AREAS TO BE SEEDED AS FOLLOWS:
       1) REMOVE ALL DEBRIS. INCLUDING LARGE STONES. TILL SOIL TO A DEPTH OF SIX INCHES. APPLY LIME AT A RATE RECOMMENDED BY APPROVED SOIL TEST.
       2) BEFORE AUGUST, SEPTEMBER OR OCTOBER SEEDING, APPLY 20–25 LBS. OF 5–10–10 FERTILIZER PER 1,000 SQUARE FEET. BEFORE FEBRUARY, MARCH, APRIL, MAY, JUNE, JULY, OR NOVEMBER SEEDING, APPLY 40 LBS. OF 10–20–10 FERTILIZER PER 1,000 SQUARE FEET.WORK INTO THE TOP INCH OF SOIL.
    D) SOW SEED AT THE INDICATED RATE. DIVIDE SEED INTO TWO EQUAL LOTS. SOW ONE LOT IN ONE DIRECTION. SOW SECOND LOT AT RIGHT ANGLE TO FIRST LOT. RAKE SEEDED AREA SLIGHTLY. ROLL SURFACE LIGHTLY TO FIRM SOIL AROUND PERIMETER.
    E) PLACE CLEAN DRY STRAW WITHIN 48 HOURS AFTER SEEDING. PLACE SEED AT THE RATE INDICATED ON PLANS.

    TEMPORARY MULCHING
    A) MULCH PROPOSED LANDSCAPE AREAS WHEN EARTHWORK IS COMPLETED OUTSIDE OF THE RECOMMENDED PLANTING SEASONS FOR TEMPORARY SEEDING OR DUE TO UNFAVORABLE WEATHER CONDITIONS.
    B) MULCH SHALL BE APPLIED IMMEDIATELY FOLLOWING THE ESTABLISHMENT OF ROUGH GRADING.
    C) MULCH WITH SUITABLE FIBROUS GROUND, SHREDDED AGED HARDWOOD, PINEWOOD BARK OR STRAW UNIFORMLY AND CONTINUOUSLY TO A LOOSED DEPTH OF 3 INCHES MINIMUM. ANCHOR AS REQUIRED.
    D) PROPERLY MAINTAIN MULCHED AREAS UNTIL PERMANENT STABILIZATION MEASURES ARE COMPLETE. REAPPLY MULCH MATERIALS WHICH BECOME DISLODGED AT INITIAL OR MODIFIED RATES AS NECESSARY. IF A SLOPE FAILURE OCCURS WHICH REQUIRES REDRESSING, EXCAVATION, OR THE ESTABLISHMENT OF A NEW SLOPE, REPLACE MULCH AS NECESSARY.
12. ALL FILL MATERIALS TO BE FREE OF FROZEN PARTICLES, BRUSH, ROOTS, SOD, OR OTHER FOREIGN OBJECTIONABLE MATERIALS THAT WOULD INTERFERE WITH OR PREVENT CONSTRUCTION OF SATISFACTORY FILLS. ALL FILLS SHALL BE COMPACTED FOR THEIR INTENDED PRODUCTS TO THE EXCLUSION OF PURPOSES AND AS REQUIRED TO REDUCE SLIPPING EROSION, OR EXCESS SATURATION.
13. FROZEN MATERIALS OR SOFT, MUCKY, OR HIGHLY COMPRESSIBLE MATERIALS SHALL NOT BE INCORPORATED INTO FILLS. FILLS SHALL NOT BE PLACED ON SATURATED OR FROZEN SURFACES.
14. ALL EARTHEN FILLS SHALL BE PLACED IN COMPACTED LAYERS NOT TO EXCEED NINE INCHES IN THICKNESS.
15. CONTRACTOR TO MAINTAIN DUST CONTROL MEASURES THROUGHOUT THE COURSE OF CONSTRUCTION FOR ALL DISTURBED AREAS. THE CONTRACTOR SHALL PROVIDE A WATER TRUCK ON-SITE AT ALL TIMES TO SPRAY DISTURBED AREAS AS NECESSARY.
16. ALL STORM DRAINAGE OUTLETS TO BE STABILIZED AS REQUIRED BEFORE THE DISCHARGE POINTS BECOME OPERATIONAL.
17. INSPECTION AND MAINTENANCE OF ALL EROSION AND SEDIMENT CONTROL BMP'S SHALL OCCUR ON A WEEKLY BASIS, BEFORE ANY ANTICIPATED PRECIPITATION EVENTS, AND AFTER ALL PRECIPITATION EVENTS.
18. UNTIL THE SITE IS STABILIZED, ALL EROSION AND SEDIMENT BMP'S MUST BE MAINTAINED PROPERLY. MAINTENANCE SHALL INCLUDE INSPECTIONS OF ALL EROSION AND SEDIMENT BMP'S PRIOR TO ANY ANTICIPATED STORM EVENT, AFTER EACH RUNOFF EVENT, AND ON A WEEKLY BASIS. ALL PREVENTATIVE AND REMEDIAL MAINTENANCE WORK, INCLUDING CLEAN OUT, REPAIR, REPLACEMENT, REGRADING, RESEEDING, REMULCHING, AND RENETTING MUST BE PERFORMED IMMEDIATELY. IF EROSION AND SEDIMENT CONTROL BMP'S FAIL TO PERFORM AS EXPECTED, REPLACEMENT BMP'S, OR MODIFICATIONS OF THOSE INSTALLED WILL BE REQUIRED.
19. PERMANENT STABILIZATION IS DEFINED AS A MINIMUM UNIFORM PERENNIAL 70% VEGETATIVE COVER OR OTHER PERMANENT NON-VEGETATIVE COVER WITH DENSITY SUFFICIENT TO RESIST ACCELERATED EROSION. CUT AND FILL SLOPES SHALL BE CAPABLE OF RESISTING FAILURE DUE TO SLUMPING, SLIDING, OR OTHER MOVEMENTS.
20. EROSION AND SEDIMENT BMP'S SHALL REMAIN FUNCTIONAL AS SUCH UNTIL ALL AREAS TRIBUTARY TO THEM ARE PERMANENTLY STABILIZED OR UNTIL THEY ARE REPLACED BY ANOTHER BMP APPROVED BY PWD AND PA DEP.
21. AFTER FINAL SITE STABILIZATION HAS BEEN ACHIEVED, TEMPORARY EROSION AND SEDIMENT CONTROL BMP'S MUST BE REMOVED OR CONVERTED TO PERMANENT POST-CONSTRUCTION STORMWATER MANAGEMENT PRACTICES. AREAS DISTURBED DURING REMOVAL OR CONVERSION OF THE EROSION AND SEDIMENT CONTROL BMP'S SHALL BE STABILIZED IMMEDIATELY, IN ORDER TO ENSURE RAPID REVEGETATION OF DISTURBED AREAS, SUCH REMOVAL/CONVERSIONS ARE TO BE DONE ONLY DURING GERMINATION SEASON.
22. IF AT ANY TIME PRIOR TO STABILIZATION ANY E&S PROBLEMS OCCUR WHICH REQUIRE ADDITIONAL MEASURES, IMMEDIATE ACTION MUST BE TAKEN TO CORRECT THE PROBLEM.
23. PENNSYLVANIA ONE CALL SYSTEM, INC. MUST BE NOTIFIED PRIOR TO ANY EARTHMOVING ACTIVITY.
24. ALL STRUCTURES ASSOCIATED WITH CONSTRUCTION OF SEDIMENT REMOVAL FACILITIES MUST BE AVAILABLE ON-SITE PRIOR TO ANY EARTHMOVING.
25. A SEPARATE PLAN SHOULD BE PREPARED BY THE CONTRACTOR REGARDING WASTE AND BORROW AREAS, AND SHOULD BE APPROVED BY PHILADELPHIA WATER DEPARTMENT.
26. ALL BUILDING MATERIALS AND WASTES MUST BE REMOVED FROM THE SITE AND RECYCLED OR DISPOSED IN ACCORDANCE WITH THE PA DEPARTMENT OF ENVIRONMENTAL PROTECTION'S SOLID WASTE MANAGEMENT REGULATIONS AT 25 PA. CODE 260.1 ET SEQ., 271.1 ET SEQ, AND 287.1 ET SEQ. NO BUILDING MATERIALS OR WASTES OR UNUSED BUILDING MATERIALS SHALL BE BURNED, BURIED, DUMPED, OR DISCHARGED AT THE SITE.
27. AN INDUSTRIAL WASTE PERMIT WILL BE REQUIRED SHOULD PUMPING TO A CITY-OWNED INFRASTRUCTURE BECOME NECESSARY DURING CONSTRUCTION. ALL PUMPING OF WATER FROM ANY WORK AREAS SHALL BE DONE ACCORDING TO THE PROCEDURE DESCRIBED IN THIS PLAN, OVER UNDISTURBED VEGETATED AREAS.
28. THE CONTRACTOR, NOT PWD, IS NOT RESPONSIBLE FOR ANY CLEANING OR REPAIRS NEEDED ON CITY-OWNED INFRASTRUCTURE DUE TO FAILURE OR ANY EROSION OR SEDIMENT CONTROL PRACTICES.
29. IMMEDIATELY UPON DISCOVERING UNFORESEEN CIRCUMSTANCES POSING THE POTENTIAL FOR ACCELERATED EROSION AND/OR SEDIMENT POLLUTION, THE OPERATOR SHALL IMPLEMENT APPROPRIATE BEST MANAGEMENT PRACTICES TO MINIMIZE THE POTENTIAL FOR EROSION AND SEDIMENT POLLUTION AND NOTIFY PWD AND PA DEP.
30. AREAS TO BE FILLED ARE TO BE CLEARED, GRUBBED, AND STRIPPED OF TOPSOIL TO REMOVE TREES, VEGETATION, ROOTS, AND OTHER OBJECTIONABLE MATERIAL.
31. CLEARING, GRUBBING, AND TOPSOIL STRIPPING SHALL BE LIMITED TO THOSE AREAS DESCRIBED IN EACH STAGE OF THE CONSTRUCTION SEQUENCE. GENERAL SITE CLEARING, GRUBBING, AND TOPSOIL STRIPPING MAY NOT COMMENCE IN ANY STAGE OF THE PROJECT UNTIL THE EROSION AND SEDIMENT CONTROL BMP'S SPECIFIED BY THE BMP SEQUENCE FOR THAT STAGE HAVE BEEN INSTALLED AND ARE FUNCTIONING AS DESCRIBED IN THE EROSION AND SEDIMENT CONTROL PLAN.
32. AT NO TIME SHALL CONSTRUCTION VEHICLES BE ALLOWED TO ENTER AREAS OUTSIDE THE LIMIT OF DISTURBANCE BOUNDARIES SHOWN ON THE PLAN MAPS. THESE AREAS MUST BE CLEARLY MARKED AND FENCED OFF BEFORE CLEARING AND GRUBBING OPERATIONS BEGIN.
33. A LOG SHOWING DATES THAT EROSION AND SEDIMENT CONTROL BMP'S WERE INSPECTED AS WELL AS DEFICIENCIES FOUND AND THE DATE THEY WERE CORRECTED SHALL BE MAINTAINED ON THE SITE AND MADE AVAILABLE TO PWD AT THE TIME OF INSPECTION.
34. ALL SEDIMENT REMOVED FROM BMP'S SHALL BE DISPOSED OFF SITE IN ACCORDANCE WITH APPLICABLE LOCAL REGULATIONS.
35. AREAS WHICH ARE TO BE TOPSOILED SHALL BE SCARIFIED TO A MINIMUM DEPTH OF THREE TO FIVE INCHES -- SIX TO 12 INCHES ON COMPACTED SOILS -- PRIOR TO THE PLACEMENT OF TOPSOIL. AREAS TO BE VEGETATED SHALL HAVE A MINIMUM OF FOUR INCHES OR TOPSOIL IN PLACE PRIOR TO SEEDING AND MULCHING. FILL OUTSLOPES SHALL HAVE A MINIMUM OF TWO INCHES OF TOPSOIL.
36. SEEPS OR SPRINGS ENCOUNTERED DURING CONSTRUCTION SHALL BE HANDLED IN ACCORDANCE WITH THE STANDARD AND SPECIFICATION FOR SUBSURFACE DRAIN OR OTHER APPROVED METHOD.
37. SEDIMENT BASINS AND/OR TRAPS SHALL BE KEPT FREE OF ALL CONSTRUCTION WASTE, WASH WATER, AND OTHER DEBRIS HAVING POTENTIAL TO CLOG THE BASIN/TRAP OUTLET STRUCTURES AND/OR POLLUTE SURFACE WATERS.
38. DURING CONSTRUCTION, THE SELECTED CONTRACTOR IS EXPECTED TO FOLLOW THE PCSMP APPROVED BY THE PWD. NO CHANGE OR DEVIATION FROM THE PCSMP IS PERMITTED WITHOUT PRIOR APPROVAL FROM THE PWD.
39. ALL WORK ASSOCIATED WITH PWD WATER CONVEYANCE AND SEWER INFRASTRUCTURE SHALL BE DONE IN ACCORDANCE WITH THE CITY OF PHILADELPHIA WATER DEPARTMENT "WATER MAIN STANDARD DETAILS AND CORROSION CONTROL SPECIFICATIONS," 1985 EDITION, AND "STANDARD DETAILS AND STANDARD SPECIFICATIONS FOR SEWERS," 2019 EDITION.
40. PERMANENT STABILIZATION IS DEFINED AS A MINIMUM UNIFORM, PERENNIAL 70% VEGETATIVE COVER OR OTHER PERMANENT NON-VEGETATIVE COVER WITH A DENSITY SUFFICIENT TO RESIST ACCELERATED EROSION. CUT AND FILL SLOPES SHALL BE CAPABLE OF RESISTING FAILURE DUE TO SLUMPING, SLIDING, OR OTHER MOVEMENTS.
42. THE MAXIMUM HEIGHT FOR STOCKPILE AREAS SHALL BE 20 FEET. THE MAXIMUM SIDE SLOPE FOR STOCKPILE AREAS SHALL NOT EXCEED 2:1.
43. THE ROCK CONSTRUCTION ENTRANCE THICKNESS SHALL BE CONSTANTLY MAINTAINED ON-SITE. A STOCKPILE SHALL BE MAINTAINED ON-SITE FOR THIS PURPOSE. AT THE END OF EACH CONSTRUCTION DAY, ALL SEDIMENT DEPOSITED ON PAVED ROADWAYS SHALL BE REMOVED AND RETURNED TO THE CONSTRUCTION SITE. IN NO CASE SHALL THE SEDIMENT BE WASHED, SHOVELED, OR SWEPT INTO ANY ROADSIDE DITCH, STORM SEWER, OR SURFACE WATER.
44. FILTER FABRIC FENCE SHOULD BE INSTALLED AT LEVEL GRADE. BOTH ENDS OF EACH FENCE SECTION SHOULD BE EXTENDED AT LEAST 8 FEET UPSLOPE AT 45 DEGREES TO THE MAIN BARRIER ALIGNMENT. SUPPORT STAKES SHALL BE SPACED AT A MAXIMUM OF 8 FEET. SEDIMENT MUST BE REMOVED WHEN ACCUMULATIONS REACH ½ THE ABOVE GROUND HEIGHT OF THE FILTER FENCE.
45. ANY FENCE SECTION WHICH HAS BEEN UNDERMINED OR TOPPED MUST BE IMMEDIATELY REPLACED WITH A ROCK FILTER OUTLET. SEDIMENT MUST BE REMOVED WHEN ACCUMULATIONS REACH ½ OF THE HEIGHT OF THE OUTLET.
46. EROSION CONTROL BLANKETING SHALL BE INSTALLED ON ALL SLOPES 3H:1V OR STEEPER WITHIN 50 FEET OF A SURFACE WATER AND ON ALL OTHER DISTURBED AREAS SPECIFIED ON THE PLAN MAPS AND/OR DETAIL SHEETS.
47. UNTIL THE SITE IS STABILIZED, ALL E&S BMPS SHALL BE MAINTAINED PROPERLY. MAINTENANCE SHALL INCLUDE INSPECTIONS OF ALL E&S BMPS PRIOR TO ANY ANTICIPATED STORM EVENT, AFTER EACH RUNOFF EVENT AND ON A WEEKLY BASIS. ALL PREVENTATIVE AND REMEDIAL MAINTENANCE WORK, INCLUDING CLEAN OUT, REPAIR, REPLACEMENT, REGRADING, RESEEDING, REMULCHING, AND RENETTING, MUST BE PERFORMED IMMEDIATELY. IF THE E&S BMPS FAIL TO PERFORM AS EXPECTED, REPLACEMENT BMPS, OR MODIFICATIONS OF THOSE INSTALLED, WILL BE REQUIRED.
48. ALL EARTH DISTURBANCES, INCLUDING CLEARING AND GRUBBING, AS WELL AS CUTS AND FILLS, SHALL BE DONE IN ACCORDANCE WITH THE APPROVED E&S PLAN. A COPY OF THE APPROVED DRAWINGS MUST BE AVAILABLE AT THE PROJECT SITE AT ALL TIMES. PWD SHALL BE NOTIFIED OF ANY CHANGES TO THE APPROVED PLAN PRIOR TO IMPLEMENTATION OF THOSE CHANGES. PWD MAY REQUIRE A WRITTEN SUBMITTAL OF THOSE CHANGES FOR REVIEW AND APPROVAL AT ITS DISCRETION.
49. AT LEAST THREE (3) DAYS PRIOR TO STARTING ANY EARTH DISTURBANCE ACTIVITES, OR EXPANDING INTO AN AREA PREVIOUSLY UNMARKED, THE PENNSYLVANIA ONE CALL SYSTEM INC. SHALL BE NOTIFIED AT 1-800-242-1776 FOR THE LOCATION OF EXISTING UNDERGROUND UTILITIES.
50. ALL FILLS SHALL BE COMPACTED AS REQUIRED TO REDUCE EROSION, SLIPPAGE, SETTLEMENT, SUBSIDENCE, OR OTHER RELATED PROBLEMS. FILL INTENDED TO SUPPORT BUILDINGS, STRUCTURES, AND CONDUITS, ETC. SHALL BE COMPACTED IN ACCORDANCE WITH LOCAL REQUIREMENTS OR CODES.
51. ALL GRADED AREAS SHALL BE PERMANENTLY STABILIZED IMMEDIATELY UPON REACHING FINISHED GRADE. CUT SLOPES IN COMPETENT BEDROCK AND ROCK FILLS NEED NOT BE VEGETATED. SEEDED AREAS WITHIN 50 FEET OF A SURFACE WATER, OR AS OTHERWISE SHOWN ON THE PLAN DRAWINGS, SHALL BE BLANKETED ACCORDING TO THE STANDARDS OF THIS PLAN.
52. 52. CONTACT PWD WATER TRANSPORT RECORDS (1101 MARKET STREET, 2ND FLOOR, PHONE: 215-685-6271) FOR ADDITIONAL APPROVALS AND PERMITS REQUIRED FOR ALL WATER SERVICES, METERS, AND CONNECTIONS TO EXISTING AND/PR PROPOSED PWD FACILITIES

DUST CONTROL NOTES

1. CONTRACTOR SHALL FOLLOW NECESSARY DUST CONTROL MEASURES AS DESCRIBED IN THE PHILADELPHIA DEPARTMENT OF PUBLIC HEALTH AIR MANAGEMENT SERVICES DUST CONTROL GUIDANCE, WHICH INCLUDE THE FOLLOWING:
   - 1.1. USE OF VACUUM OR SIMILAR SUCTION SYSTEMS TO CAPTURE DUST KICKED UP BY POWER TOOLS WHEN GRINDING/CUTTING.
   - 1.2. APPLICATION OF WATER OR APPROVED DUST SUPPRESSANT TO A WORKSITE WITH ONGOING EXCAVATION, LAND CLEARING, DEMOLITION, OR OTHER EARTH DISTURBANCE RELATED ACTIVITIES TO SUPPRESS DUST FORMATION.
   - 1.3. COVERING AND WETTING OF STOCKPILED EARTH, SAND, GRAVEL, AND OTHER SIMILAR CONSTRUCTION MATERIALS.
   - 1.4. USE OF A MATERIAL CHUTE WHEN DROPPING MATERIAL OR DEBRIS MORE THAN 20 FT OUTSIDE OF THE EXTERIOR WALLS OF A BUILDING OR STRUCTURE. MATERIALS MUST BE WETTED WHEN DROPPED, AND/OR EXIT OF CHUTE MUST BE SEALED AGAINST THE TOP OF THE RECEIVING CONTAINER OR DUMPSTER.
   - 1.5. A 10 MILES PER HOUR SPEED LIMIT FOR ALL EQUIPMENT AND TRUCKS TRAVELING WITHIN THE WORKSITE.
   - 1.6. WETTING AND SWEEPING OF ROADWAYS AND ACCESS ROADS IN A WORKSITE TO PREVENT DUST FORMATION.
   - 1.7. VEHICLE ACCESS POINTS MUST BE EQUIPPED WITH DUST SUPPRESSION MEASURES (I.E. WHEEL WASH SYSTEMS, RUMBLE GRATES, AND/OR ROCK CONSTRUCTION ENTRANCE.)
2. THE CONTRACTOR MUST CONTROL ALL DUST ORIGINATING ON THIS PROJECT BY WATERING OR OTHER METHODS AS REQUIRED. THE CONTRACTOR IS RESPONSIBLE TO OBTAIN A DUST CONTROL PERMIT FROM PHILADELPHIA AIR MANAGEMENT SERVICES PRIOR TO BEGINNING WORK.
3. A DUST CONTROL PERMIT WILL BE REQUIRED WHEN COMPLETELY DEMOLISHING A BUILDING OR STRUCTURE THAT IS MORE THAN THREE (3) STORIES, GREATER THAN FORTY (40) FEET TALL, OR ENCOMPASSES MORE THAN TEN THOUSAND (10,000) SQUARE FEET; COMPLETELY OR PARTIALLY DEMOLISHING ANY BUILDING OR STRUCTURE BY IMPLOSION; OR ENGAGING IN EARTHWORKS, DEFINED AS "CLEANING, GRUBBING, OR EARTH DISTURBANCE OF ANY LAND IN EXCESS OF 5,000 SQUARE FEET."

CONSTRUCTION SEQUENCING NOTES

1. ALL REQUIRED PERMITS MUST BE OBTAINED PRIOR TO BEGINNING CONSTRUCTION, INCLUDING BUT NOT LIMITED TO: PWD STORMWATER MANAGEMENT PLAN APPROVAL. A COPY OF THE APPROVED EROSION AND SEDIMENT (E&S) CONTROL PLANS MUST BE AVAILABLE AT THE PROJECT SITE AT ALL TIMES.
2. ALL EARTH DISTURBANCE ACTIVITIES SHALL PROCEED IN ACCORDANCE WITH THE PROVIDED ON PLAN DRAWINGS. DEVIATION FROM THAT SEQUENCE MUST BE APPROVED IN WRITING BY PWD AND THE PA DEP PRIOR TO IMPLEMENTATION. EACH STAGE SHALL BE COMPLETED AND IMMEDIATELY STABILIZED BEFORE ANY FOLLOWING STAGE IS INITIATED.
3. AT LEAST 7 DAYS BEFORE STARTING ANY EARTH DISTURBANCE ACTIVITIES, THE OPERATOR SHALL INVITE ALL CONTRACTORS INVOLVED IN THOSE ACTIVITIES, THE LANDOWNER, ALL APPROPRIATE MUNICIPAL OFFICIALS, THE EROSION THE SEDIMENTATION CONTROL PLAN PREPARER AND THE REPRESENTATIVE OF THE PWD TO SCHEDULE AN ON-SITE PRE-CONSTRUCTION MEETING.
4. AT LEAST 3 DAYS BEFORE STARTING ANY EARTH DISTURBANCE ACTIVITIES, ALL CONTRACTORS INVOLVED IN THOSE ACTIVITIES SHALL NOTIFY THE PENNSYLVANIA ONE-CALL SYSTEM INC. AT 1-800-242-1776 FOR THE LOCATION OF EXISTING UNDERGROUND UTILITIES.
5. PUMPING OF ENCOUNTERED GROUNDWATER TO CITY OWNED FACILITIES IS SUBJECT TO PRE-APPROVAL FROM PWD INDUSTRIAL WASTE UNIT. WATER PUMPED FROM WORK AREAS SHOULD BE TREATED FOR SEDIMENT REMOVAL PRIOR TO DISCHARGING.
6. LIMITS OF DISTURBANCE ARE TO BE MARKED IN THE FIELD AS SHOWN ON THE E&S PLANS, USING SURVEY STAKES AND TEMPORARY CONSTRUCTION FENCING, PRIOR TO ANY EARTH DISTURBANCE.
7. INSTALL CONSTRUCTION ENTRANCE, EXISTING PAVEMENT PROTECTION SYSTEMS, AND CONCRETE WASHOUT STATION. CONSTRUCTION ENTRANCE SHALL BE SWEPT ON A WEEKLY BASIS OR SOONER AS REQUIRED.
8. INSTALL INLET PROTECTION TO EXISTING INLETS PRIOR TO ANY EARTH DISTURBANCE.
9. INSTALL COMPOST FILTER SOCKS AND PLACE TEMPORARY SOIL STOCKPILES.
10. INSTALL TREE PROTECTION FENCING AROUND EXISTING TREES AND PLANTINGS TO REMAIN. CONTRACTOR IS RESPONSIBLE FOR REPLACING ANY LANDSCAPING IN KIND IF AFFECTED DURING CONSTRUCTION.
11. IT IS THE RESPONSIBILITY OF THE CONTRACTOR TO FIELD VERIFY ON-SITE UTILITIES PRI

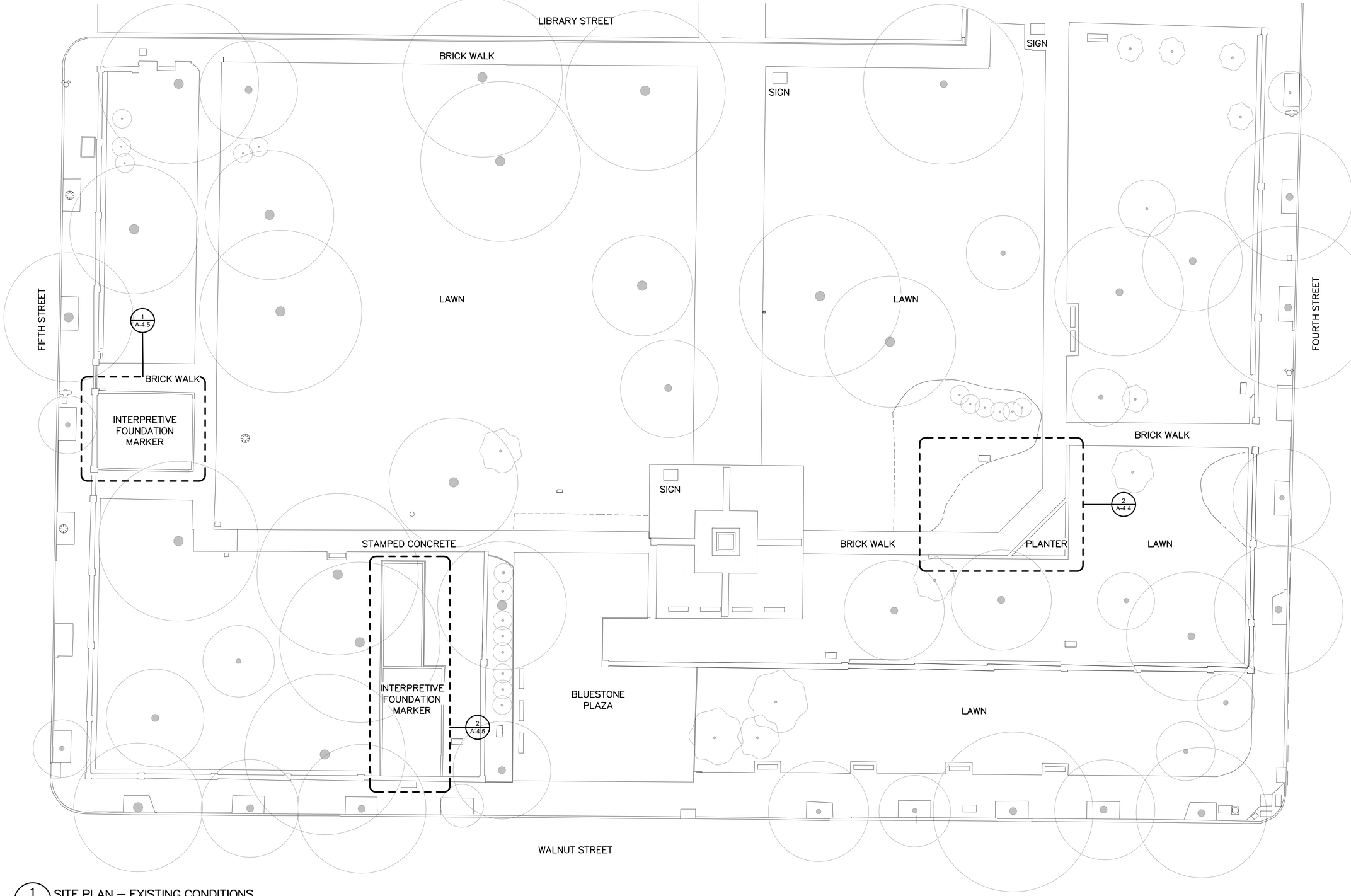

1 A-1.0 SITE PLAN – EXISTING CONDITIONS
SCALE (A)

PROJECT NORTH

SCALE (A)

20 0 20 40
SCALE OF FEET

DESIGNED: KF	SUB SHEET NO. A-1.0	SECOND BANK BLOCK EXISTING CONDITIONS INDEPENDENCE NATIONAL HISTORICAL PARK	DRAWING NO. 391–186675
CADD TC			PMIS/PKG NO. 308228
TECH. REVIEW: KF			SHEET 11 OF 41
DATE: 2/26/25			

C:\Users\katherinef\Documents\Independence Park Second Bank Block_022025_katherinefFAGFR.rvt

2/27/2025 2:44:19 PM

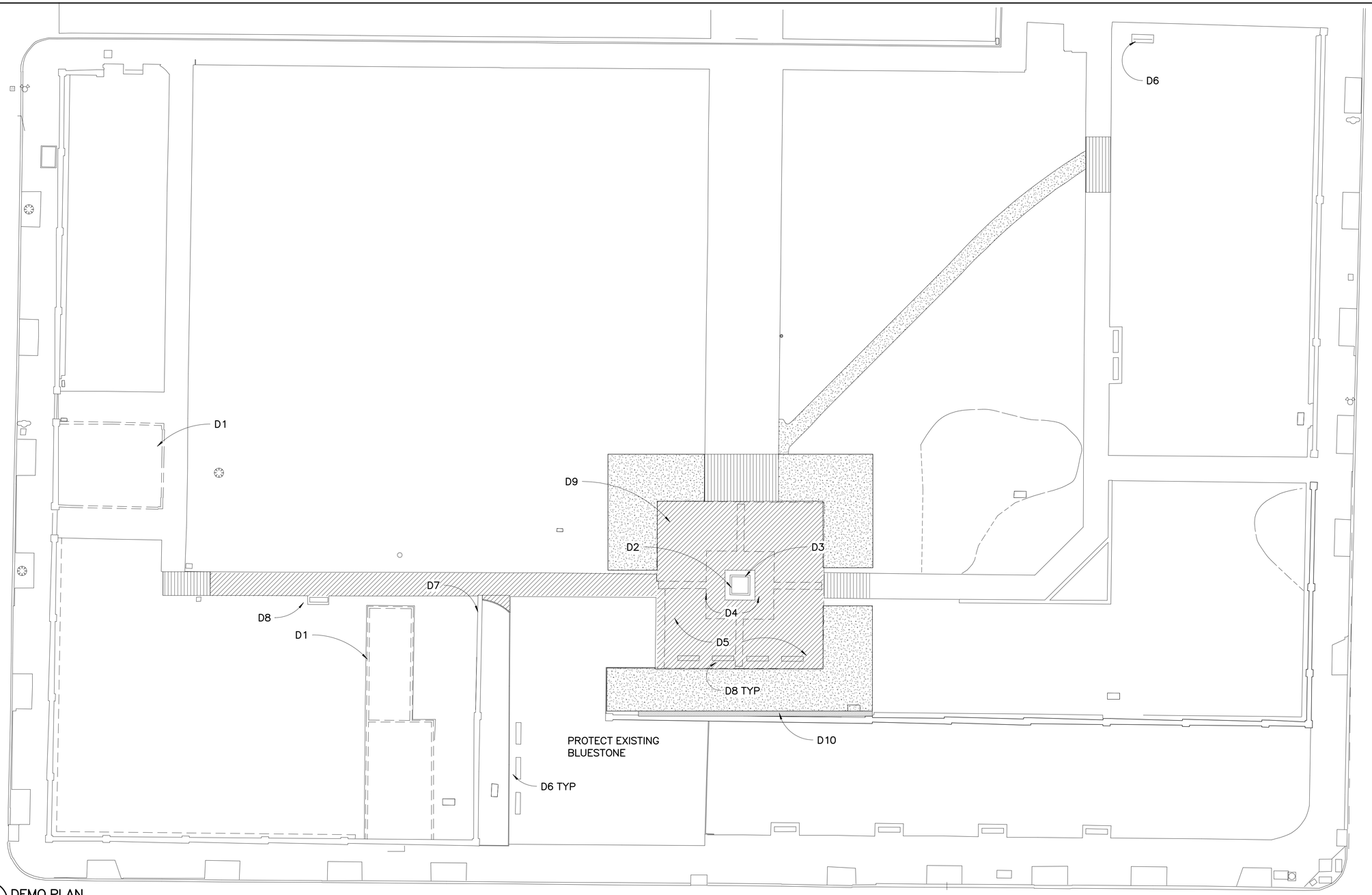

1 A–2.0 DEMO PLAN
SCALE Ⓐ

DEMO KEYNOTES	
D1	REMOVE BRICK FOUNDATION MARKER; SALVAGE BRICK FOR REUSE – OPTION 2
D2	REMOVE SCULPTURE FROM MARBLE BASE AND CONSERVE OFF–SITE FOR REINSTALLATION – OPTION 3
D3	REMOVE MARBLE BASE STONES AND SALVAGE FOR REINSTALLATION – OPTION 3
D4	REMOVE STAMPED CONCRETE (BLUESTONE) PAVING
D5	REMOVE CONCRETE PAVING
D6	EXISTING SOAPSTONE BENCH TO REMAIN. PROTECT IN PLACE.
D7	REMOVE STONE COPING AND SALVAGE FOR REINSTALLATION – OPTION 1
D8	EXISTING SOAPSTONE BENCH TO REMAIN. SALVAGE FOR REINSTALLATION.
D9	REMOVE AND SALVAGE INTERPRETIVE SIGNAGE
D10	REMOVE AND REBUILD SECTION OF BRICK GUTTER

DEMO PLAN LEGEND

- DEMO
- REMOVE PAVING
- REMOVE SOIL FOR NEW WORK
- LIFT & RESET BRICK

PROJECT NORTH

SCALE Ⓐ 20 0 20 40
SCALE OF FEET

DESIGNED: KF	SUB SHEET NO. A–2.0	SECOND BANK BLOCK REMOVALS PLAN	DRAWING NO. 391–186675
DADP TC			PMIS/PKG NO. 308228
TECH. REVIEW: KF		INDEPENDENCE NATIONAL HISTORICAL PARK	SHEET 12 OF 41
DATE: 2/26/25			

C:\Users\katherinef\Documents\Independence Park Second Bank Block_022025_katherinefFAGFR.rvt

2/27/2025 2:44:22 PM

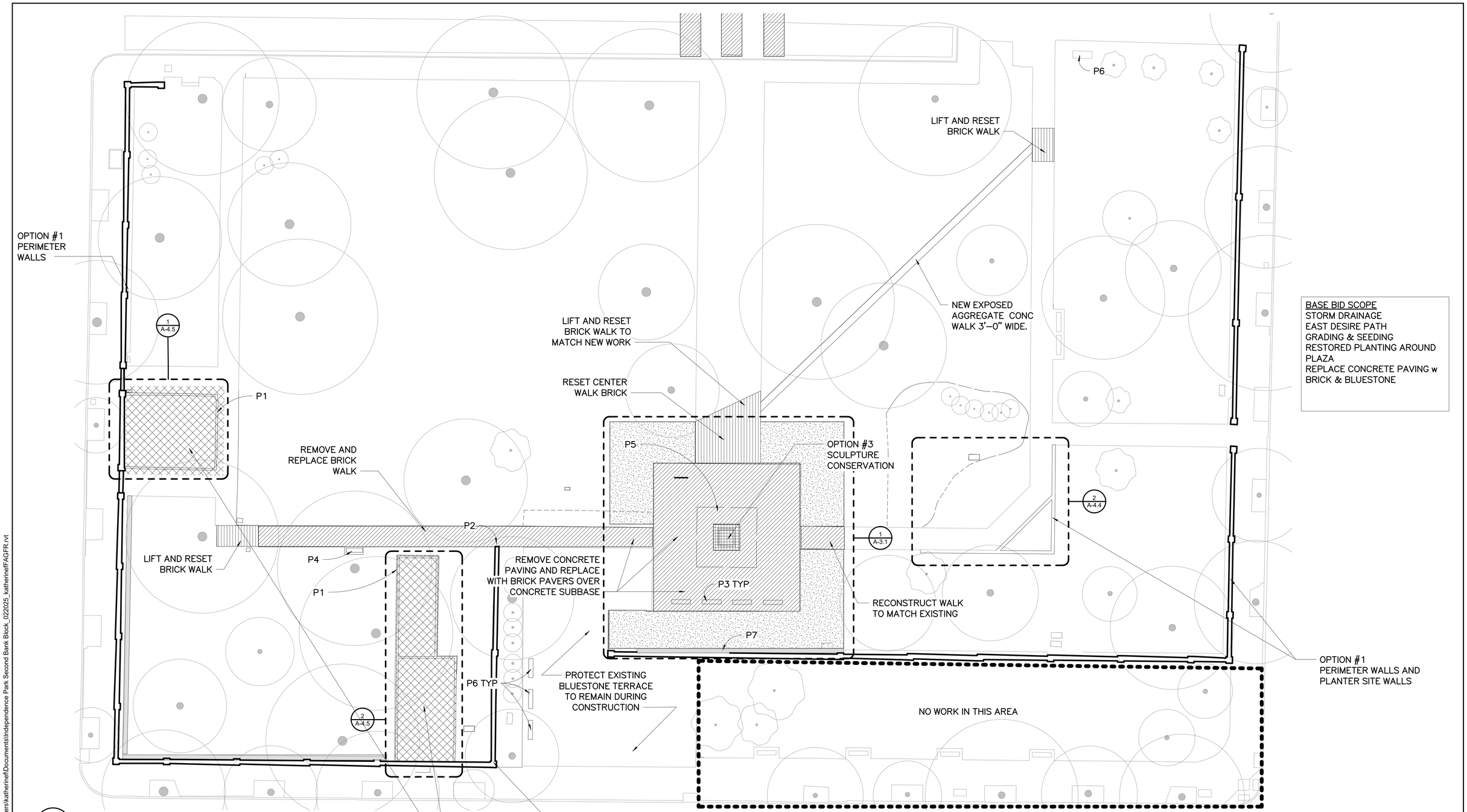

BASE BID SCOPE
STORM DRAINAGE
EAST DESIRE PATH
GRADING & SEEDING
RESTORED PLANTING AROUND PLAZA
REPLACE CONCRETE PAVING w BRICK & BLUESTONE

1 A–3.0 SITE PLAN PROPOSED
SCALE (A)

PLAN KEYNOTES	
P1	RECONSTRUCT FOUNDATION MARKER IN BRICK – OPTION 2
P2	RESET SOAPSTONE CAP ON NEW ANCHOR – OPTION 1
P3	REINSTALL SOAPSTONE BENCH.
P4	REINSTALL TEAK BENCH
P5	BLUESTONE PAVING
P6	PROTECT EXISTING SOAPSTONE BENCHES IN PLACE
P7	REBUILD BRICK GUTTER. SEE DETAIL A–3.1

PROJECT NORTH

SCALE (A) 20 0 20 40
SCALE OF FEET

DESIGNED: KF	SUB SHEET NO.	SECOND BANK BLOCK	DRAWING NO.
DRAWN: TC	A–3.0	PROPOSED SITE PLAN	391–186675
TECH. REVIEW: KF			PMIS/PKG NO. 308228
DATE: 2/26/25		INDEPENDENCE NATIONAL HISTORICAL PARK	SHEET 13 OF 41

C:\Users\katherinef\Documents\Independence Park Second Bank Block_022025_katherinefFAGFR.rvt

2/27/2025 2:44:22 PM

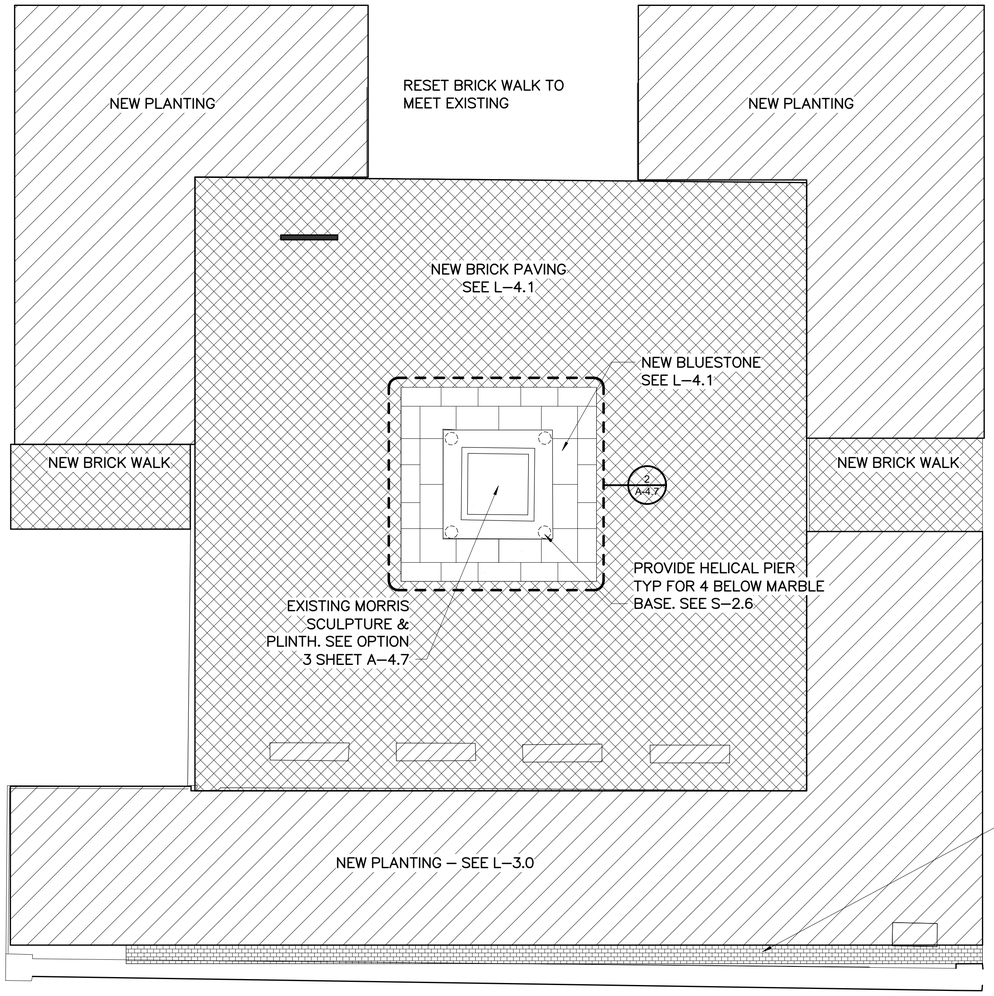

1 A–3.1 PROPOSED MORRIS PLAZA – BASE BID
SCALE Ⓐ

PLAN LEGEND

RESET SALVAGED BENCH SEE DETAIL 5/L–4.3

RESET INTERPRETIVE SIGN

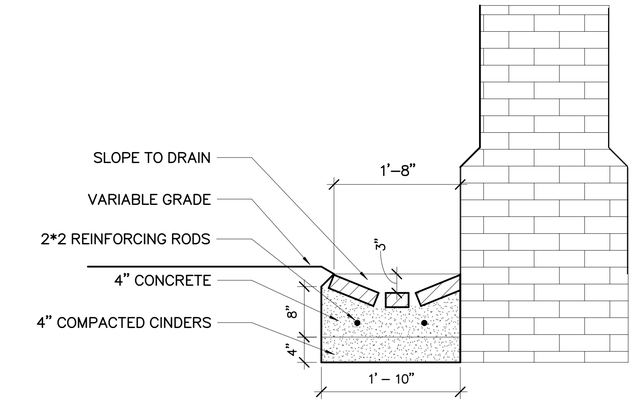

4 A–3.1 BRICK GUTTER SECTION DETAIL
SCALE Ⓒ

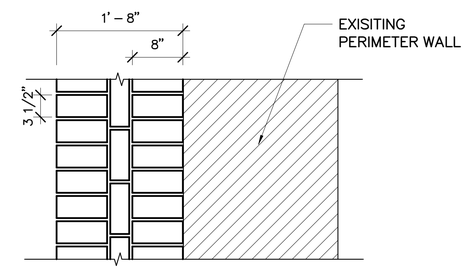

5 A–3.1 BRICK GUTTER PLAN DETAIL
SCALE Ⓒ

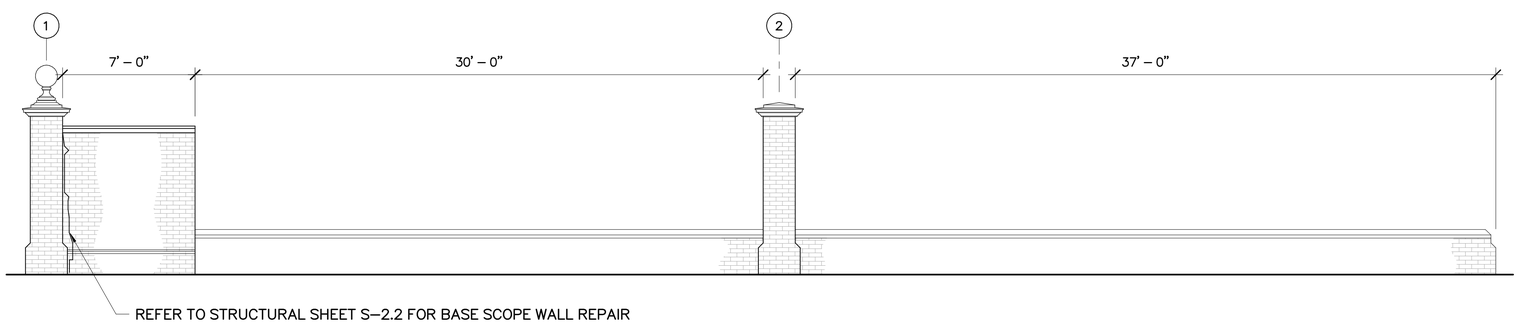

2 A–3.1 WALNUT STREET RETURN WALL – ELEVATION
SCALE Ⓑ

PROJECT NORTH

SCALE Ⓐ 8 0 8 16 SCALE OF FEET

SCALE Ⓑ 4 0 4 8 SCALE OF FEET

DESIGNED: KF	SUB SHEET NO.	SECOND BANK BLOCK	DRAWING NO.
DRAWN: TC	A–3.1	BASE BID MORRIS PLAZA WALL REPAIR	391–186675
TECH. REVIEW: KF			PMIS/PKG NO. 308228
DATE: 2/26/25		INDEPENDENCE NATIONAL HISTORICAL PARK	SHEET 14 OF 41

C:\Users\katherinef\Documents\Independence Park Second Bank Block_022025_katherinefFAGFR.rvt

2/27/2025 2:44:23 PM

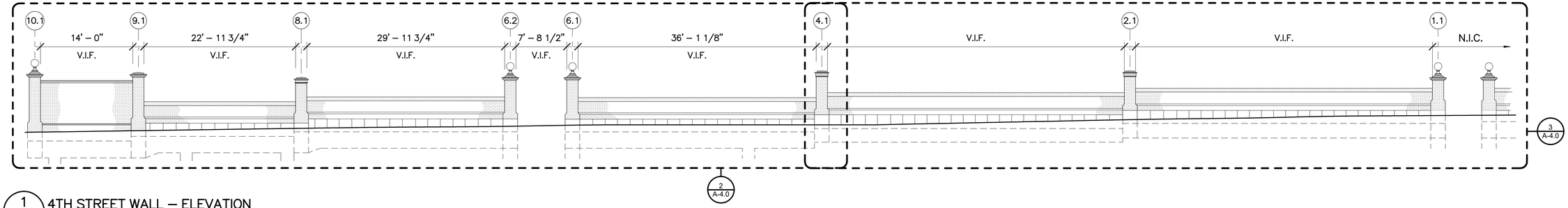

1 A–4.0 4TH STREET WALL – ELEVATION

SCALE B

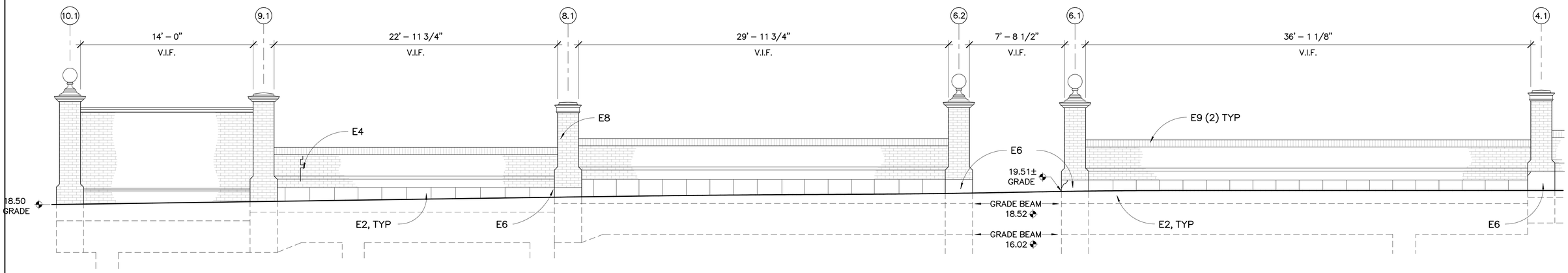

2 A–4.0 4TH STREET WALL – PARTIAL ELEVATION 1

SCALE A

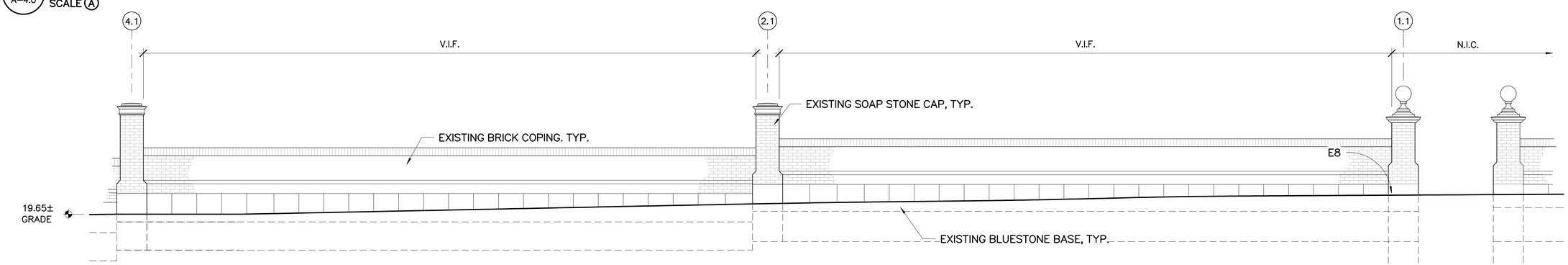

3 A–4.0 4TH STREET WALL – PARTIAL ELEVATION 2

SCALE A

ELEVATION KEYNOTES	
E1	PROVIDE NEW STONE DUTCHMAN TO MATCH EXISTING
E2	REPOINT OPEN JOINTS
E3	CRACK REPAIR AT STONE
E4	CRACK REPAIR AT BRICK SEE DETAIL
E5	COMPOSITE PATCH REPAIR
E6	REPLACE BLUESTONE BASE STONE
E7	SCRAPE AND PREP TO PAINT RAILINGS/GATE
E8	REPLACE SEALANT JOINT WITH SANDED JOINT
E9	REPLACE MISSING BRICK WITH NEW TO MATCH EXISTING MOULDED BRICK
E10	REPAIR & RESET SOAPSTONE CAP

GENERAL NOTES

1. CLEAN BOTH SIDES OF WALL AND COPING TO REMOVE GENERAL SOILING AND BIOLOGICAL GROWH.
2. ALLOW FOR REPOINTING OF 20% OF WALLS. REPOINT OPEN JOINTS AT STONE STONE COPINGS, BASE STONES AND WATER TABLE.
3. REMOVE IVY FROM THE VERTICAL FACE OF THE WALLS.

SCALE A: 4 0 4 8 — SCALE OF FEET

SCALE B: 8 0 8 16 — SCALE OF FEET

DESIGNED: KF	SUB SHEET NO. A-4.0	SECOND BANK BLOCK OPTION#1 – PERIMETER WALLS	DRAWING NO. 391–186675
DRAWN: TC			PMIS/PKG NO. 308228
TECH. REVIEW: KF		INDEPENDENCE NATIONAL HISTORICAL PARK	SHEET 15 OF 41
DATE: 2/26/25			

C:\Users\katherinef\Documents\Independence Park Second Bank Block_022025_katherinefFAGFR.rvt

2/27/2025 2:44:25 PM

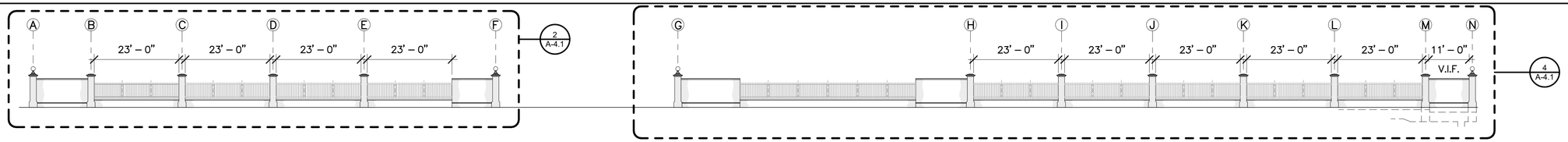

1 A–4.1 WALNUT STREET WALL – ELEVATION
SCALE Ⓒ

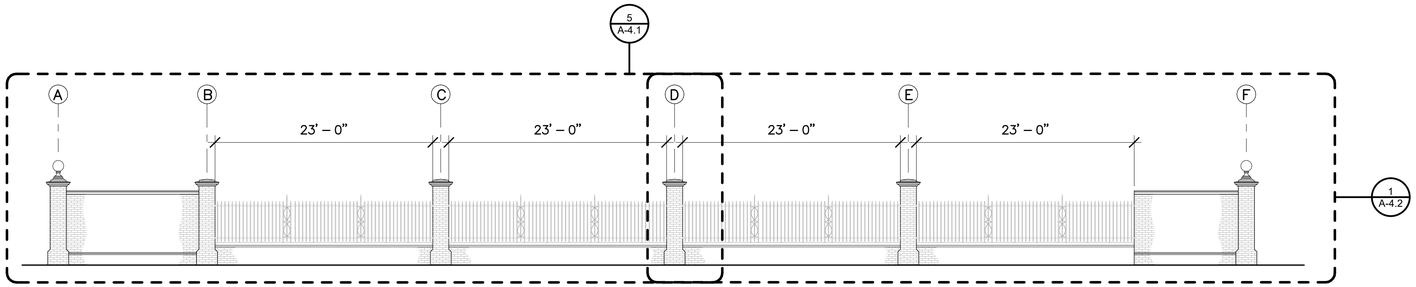

2 A–4.1 WALNUT STREET WALL – ELEVATION A
SCALE Ⓑ

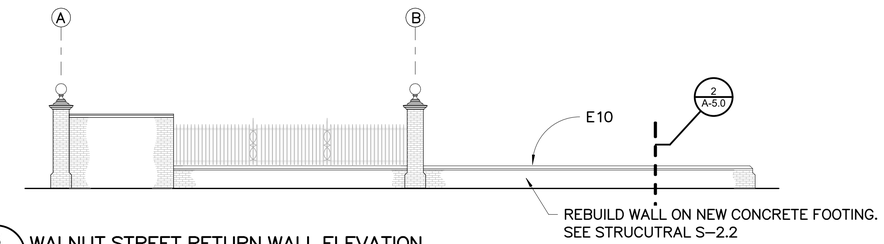

3 A–4.1 WALNUT STREET RETURN WALL ELEVATION
SCALE Ⓑ

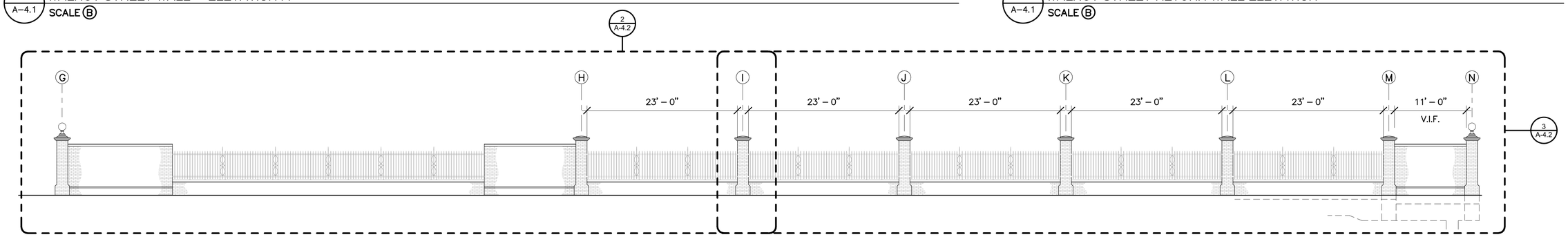

4 A–4.1 WALNUT STREET WALL – ELEVATION B
SCALE Ⓑ

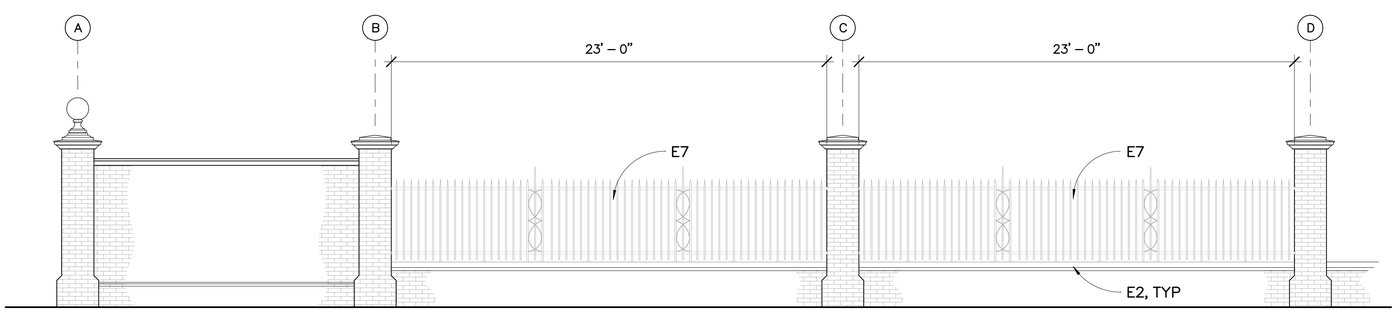

5 A–4.1 WALNUT STREET WALL – PARTIAL ELEVATION
SCALE Ⓐ

GENERAL NOTES

1. CLEAN BOTH SIDES OF WALL AND COPING TO REMOVE GENERAL SOILING AND BIOLOGICAL GROWH.
2. ALLOW FOR REPOINTING OF 20% OF WALLS. REPOINT OPEN JOINTS AT STONE STONE COPINGS, BASE STONES AND WATER TABLE.
3. REMOVE IVY FROM THE VERTICAL FACE OF THE WALLS.

ELEVATION KEYNOTES	
E1	PROVIDE NEW STONE DUTCHMAN TO MATCH EXISTING
E2	REPOINT OPEN JOINTS
E3	CRACK REPAIR AT STONE
E4	CRACK REPAIR AT BRICK SEE DETAIL
E5	COMPOSITE PATCH REPAIR
E6	REPLACE BLUESTONE BASE STONE
E7	SCRAPE AND PREP TO PAINT RAILINGS/GATE
E8	REPLACE SEALANT JOINT WITH SANDED JOINT
E9	REPLACE MISSING BRICK WITH NEW TO MATCH EXISTING MOULDED BRICK
E10	REPAIR & RESET SOAPSTONE CAP

SCALE Ⓑ 8 0 8 16 SCALE OF FEET

SCALE Ⓐ 4 0 4 8 SCALE OF FEET

SCALE Ⓒ 16 0 16 32 SCALE OF FEET

DESIGNED: KF	SUB SHEET NO. A-4.1	SECOND BANK BLOCK OPTION#1 – PERIMETER WALLS	DRAWING NO. 391–186675
DRAWN: TC			PMIS/PKG NO. 308228
TECH. REVIEW: KF		INDEPENDENCE NATIONAL HISTORICAL PARK	SHEET 16 OF 41
DATE: 2/26/25			

C:\Users\katherinef\Documents\Independence Park Second Bank Block_022025_katherinefFAGFR.rvt

2/27/2025 2:44:27 PM

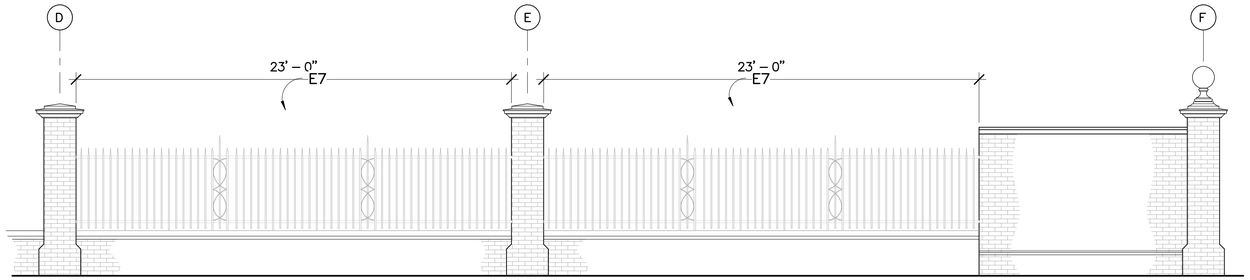

1 A–4.2 WALNUT STREET WALL – PARTIAL ELEVATION 2
SCALE (A)

GENERAL NOTES

1. CLEAN BOTH SIDES OF WALL AND COPING TO REMOVE GENERAL SOILING AND BIOLOGICAL GROWH.
2. ALLOW FOR REPOINTING OF 20% OF WALLS. REPOINT OPEN JOINTS AT STONE STONE COPINGS, BASE STONES AND WATER TABLE.
3. REMOVE IVY FROM THE VERTICAL FACE OF THE WALLS.

ELEVATION KEYNOTES	
E1	PROVIDE NEW STONE DUTCHMAN TO MATCH EXISTING
E2	REPOINT OPEN JOINTS
E3	CRACK REPAIR AT STONE
E4	CRACK REPAIR AT BRICK SEE DETAIL
E5	COMPOSITE PATCH REPAIR
E6	REPLACE BLUESTONE BASE STONE
E7	SCRAPE AND PREP TO PAINT RAILINGS/GATE
E8	REPLACE SEALANT JOINT WITH SANDED JOINT
E9	REPLACE MISSING BRICK WITH NEW TO MATCH EXISTING MOULDED BRICK
E10	REPAIR & RESET SOAPSTONE CAP

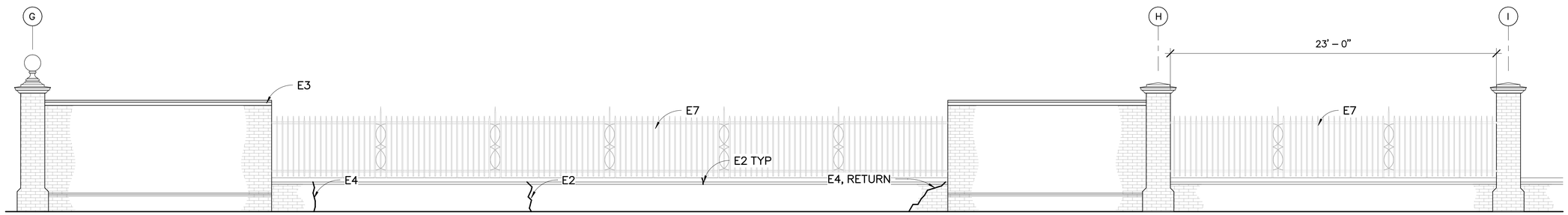

2 A–4.2 WALNUT STREET WALL – PARTIAL ELEVATION 3
SCALE (A)

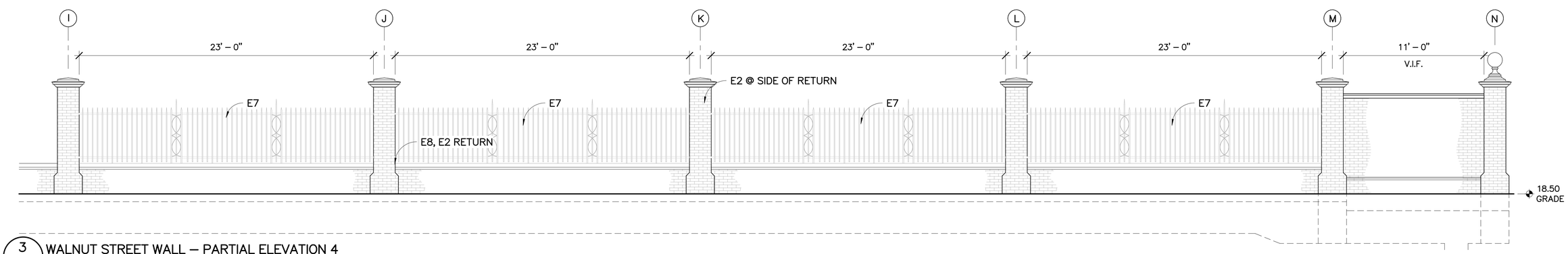

3 A–4.2 WALNUT STREET WALL – PARTIAL ELEVATION 4
SCALE (A)

SCALE (A) 4 0 4 8
SCALE OF FEET

DESIGNED: KF	SUB SHEET NO.	SECOND BANK BLOCK	DRAWING NO. 391–186675
CADD TC	A-4.2	OPTION#1 – PERIMETER WALLS	PMIS/PKG NO. 308228
TECH. REVIEW: KF		INDEPENDENCE NATIONAL HISTORICAL PARK	SHEET 17 OF 41
DATE: 2/26/25			

C:\Users\katherinef\Documents\Independence Park Second Bank Block_022025_katherinefFAGFR.rvt
2/27/2025 2:44:28 PM

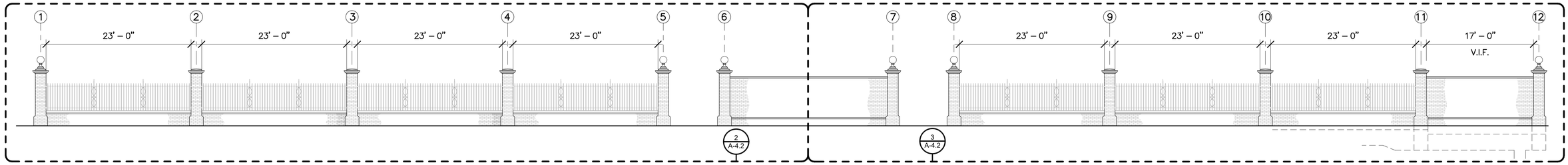

1 / A–4.3 5TH STREET WALL – ELEVATION
SCALE B

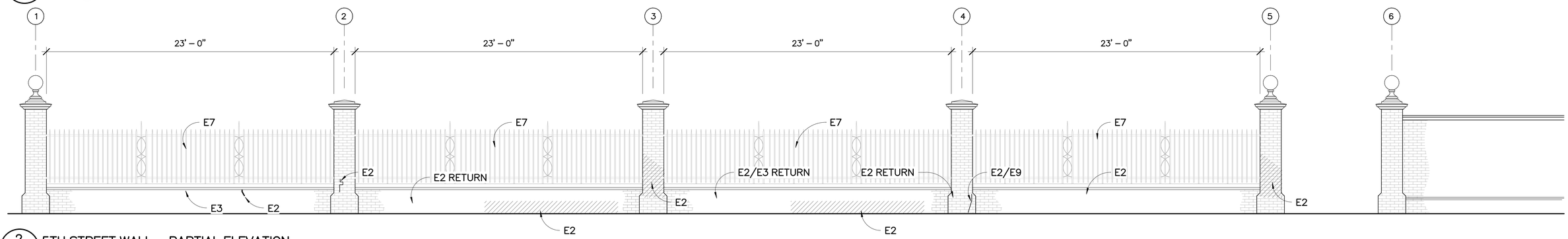

2 / A–4.3 5TH STREET WALL – PARTIAL ELEVATION
SCALE A

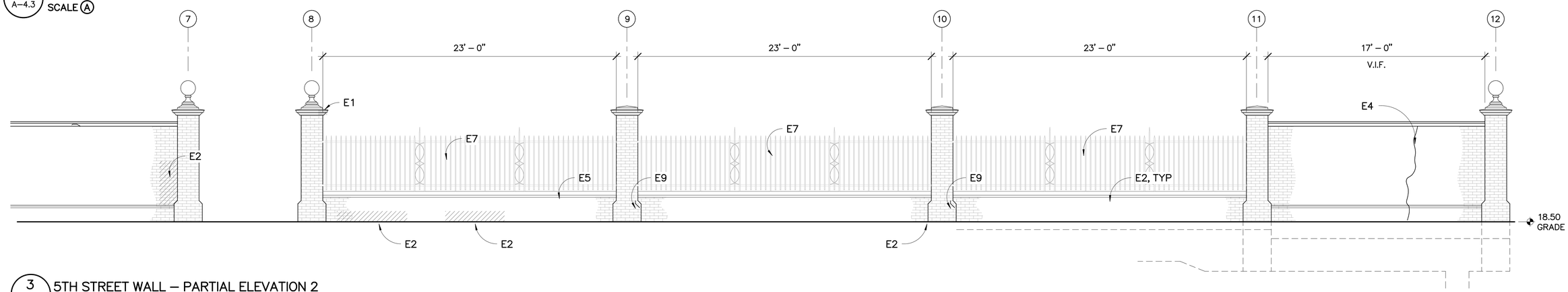

3 / A–4.3 5TH STREET WALL – PARTIAL ELEVATION 2
SCALE A

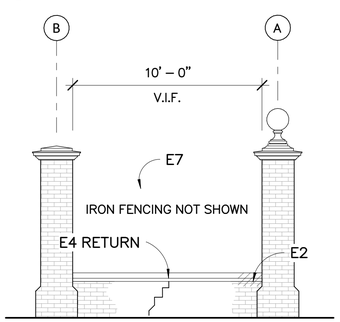

4 / A–4.3 LIBRARY STREET WALL – ELEVATION
SCALE A

ELEVATION KEYNOTES	
E1	PROVIDE NEW STONE DUTCHMAN TO MATCH EXISTING
E2	REPOINT OPEN JOINTS
E3	CRACK REPAIR AT STONE
E4	CRACK REPAIR AT BRICK SEE DETAIL
E5	COMPOSITE PATCH REPAIR
E6	REPLACE BLUESTONE BASE STONE
E7	SCRAPE AND PREP TO PAINT RAILINGS/GATE
E8	REPLACE SEALANT JOINT WITH SANDED JOINT
E9	REPLACE MISSING BRICK WITH NEW TO MATCH EXISTING MOULDED BRICK
E10	REPAIR & RESET SOAPSTONE CAP

GENERAL NOTES

1. CLEAN BOTH SIDES OF WALL AND COPING TO REMOVE GENERAL SOILING AND BIOLOGICAL GROWH.
2. ALLOW FOR REPOINTING OF 20% OF WALLS. REPOINT OPEN JOINTS AT STONE STONE COPINGS, BASE STONES AND WATER TABLE.
3. REMOVE IVY FROM THE VERTICAL FACE OF THE WALLS.

SCALE A: 4 0 4 8 — SCALE OF FEET

SCALE B: 8 0 8 16 — SCALE OF FEET

DESIGNED: KF DRAWN: TC TECH. REVIEW: KF DATE: 2/26/25	SUB SHEET NO. A-4.3	SECOND BANK BLOCK OPTION#1 – PERIMETER WALLS INDEPENDENCE NATIONAL HISTORICAL PARK	DRAWING NO. 391–186675 PMIS/PKG NO. 308228 SHEET 18 OF 41

C:\Users\katherinef\Documents\Independence Park Second Bank Block_022025_katherinefFAGFR.rvt

2/27/2025 2:44:30 PM

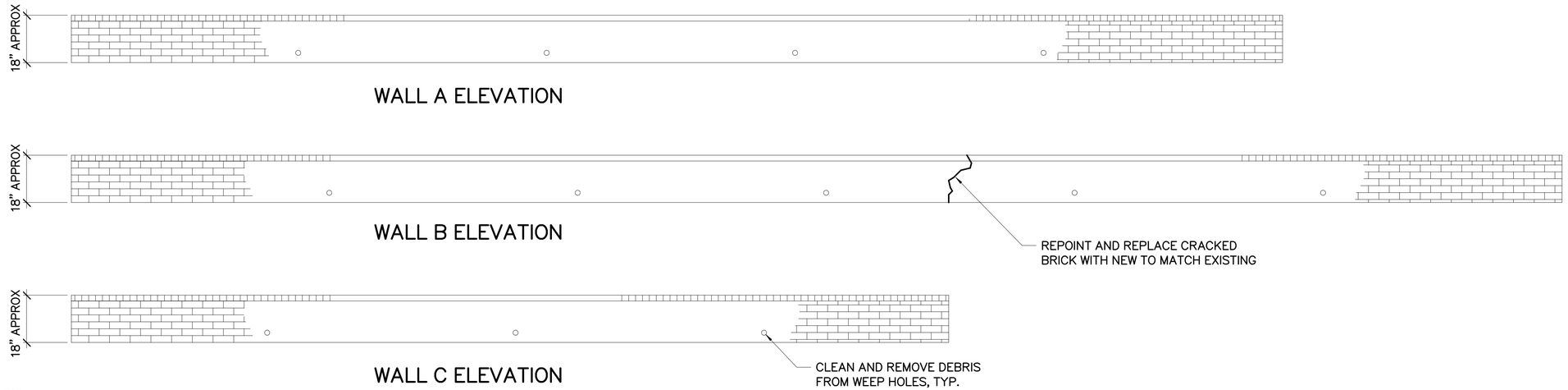

1 / A-4.4 PLANTER / SITE WALL ELEVATIONS
SCALE (A)

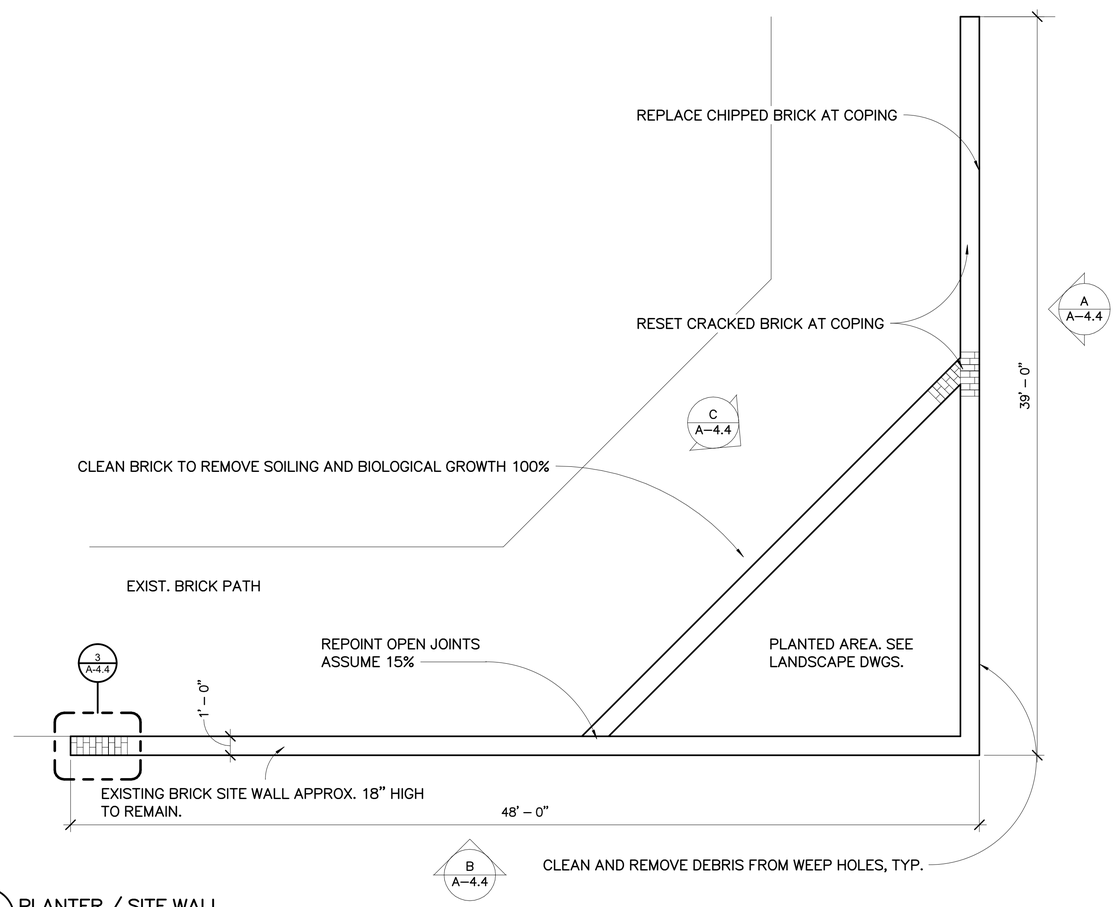

2 / A-4.4 PLANTER / SITE WALL
SCALE (B)

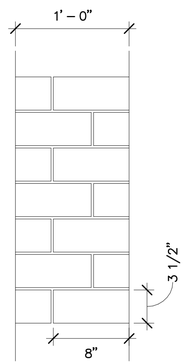

3 / A-4.4 TYPICAL BRICK COPING PLAN DETAIL
SCALE (C)

PROJECT NORTH

SCALE (A) 2 0 2 4 — SCALE OF FEET

SCALE (B) 4 0 4 8 — SCALE OF FEET

SCALE (C) 1 1/2 0 1 1/2 3 — SCALE OF FEET

GENERAL NOTES

1. CLEAN BOTH SIDES OF WALL AND COPING TO REMOVE GENERAL SOILING AND BIOLOGICAL GROWH.
2. ALLOW FOR REPOINTING OF 20% OF WALLS. REPOINT OPEN JOINTS AT STONE STONE COPINGS, BASE STONES AND WATER TABLE.
3. REMOVE IVY FROM THE VERTICAL FACE OF THE WALLS.

DESIGNED: KF	SUB SHEET NO.	SECOND BANK BLOCK	DRAWING NO. 391–186675
DADP TC	A-4.4	OPTION#1 – PLANTER SITE WALLS	PMIS/PKG NO. 308228
TECH. REVIEW: KF		INDEPENDENCE NATIONAL HISTORICAL PARK	SHEET 19 OF 41
DATE: 2/26/25			

C:\Users\katherinef\Documents\Independence Park Second Bank Block_022025_katherinefFAGFR.rvt

2/27/2025 2:44:30 PM

OPTION#2: RECONSTRUCT HISTORIC FOUNDATION MARKERS TO MATCH EXISTING ON NEW FOUNDATIONS.

SEE S–2.1

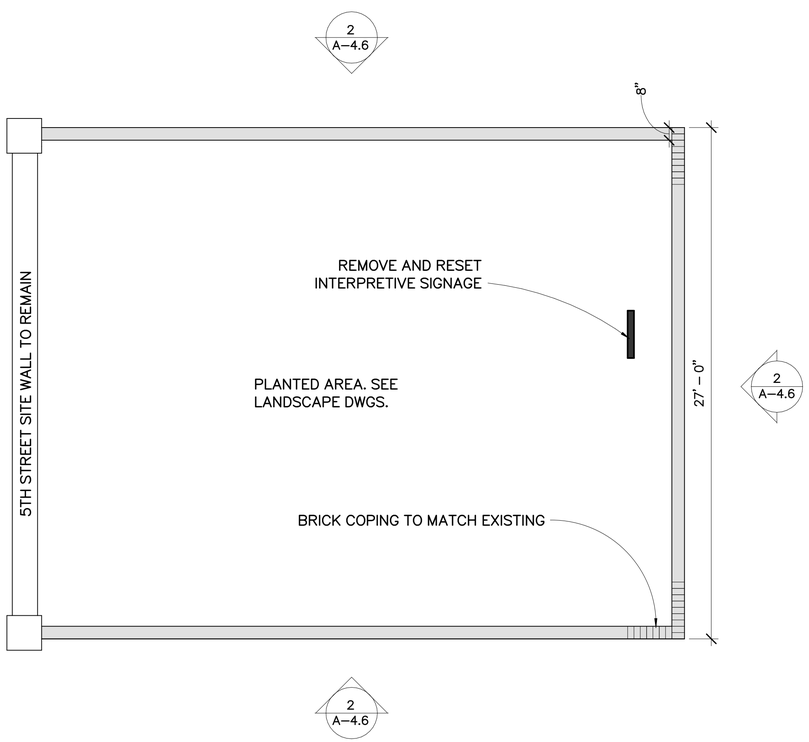

1 A–4.5 INTERPRETIVE FOUNDATION PLAN 5TH STREET
SCALE Ⓐ

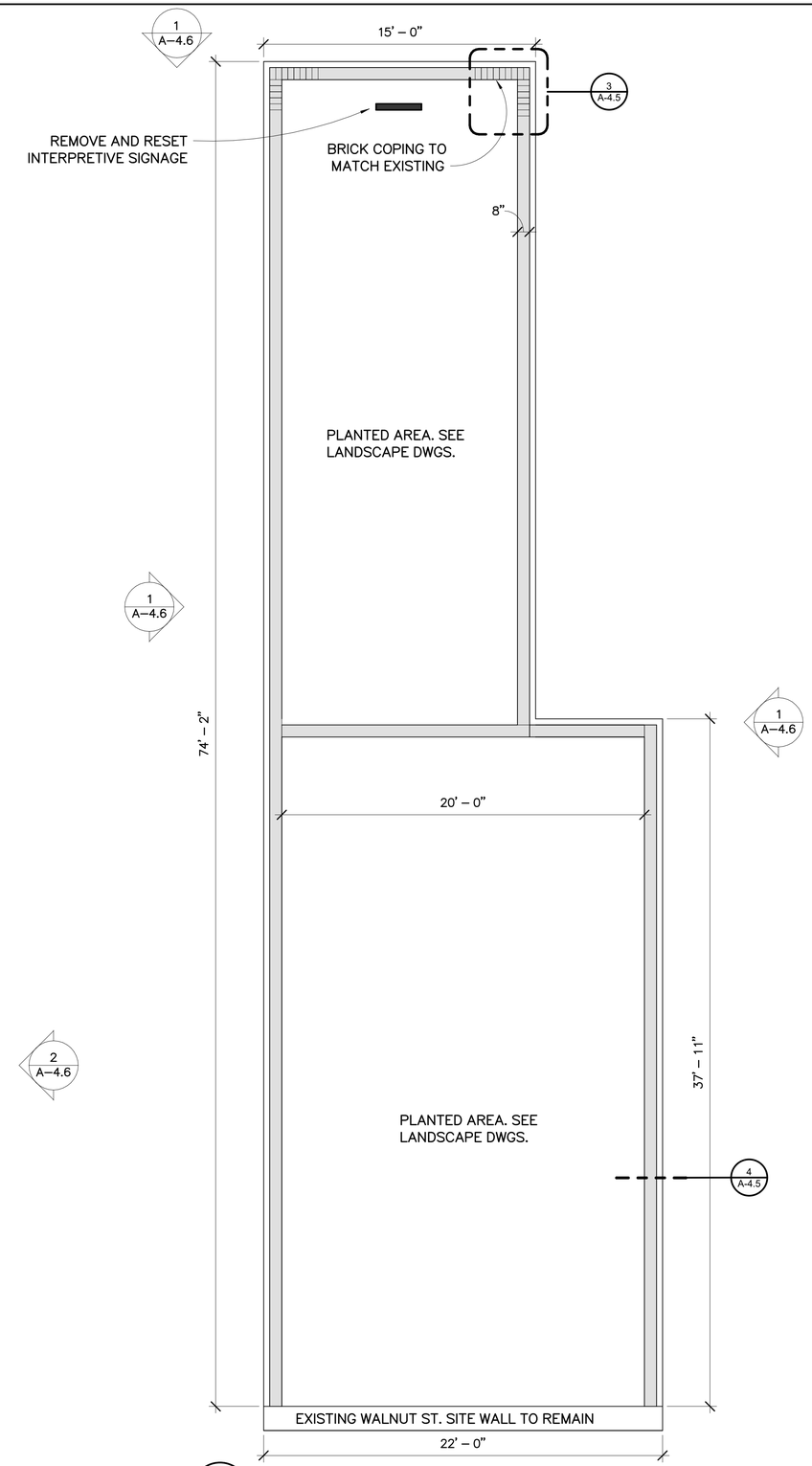

2 A–4.5 INTERPRETIVE FOUNDATION PLAN WALNUT STREET
SCALE Ⓐ

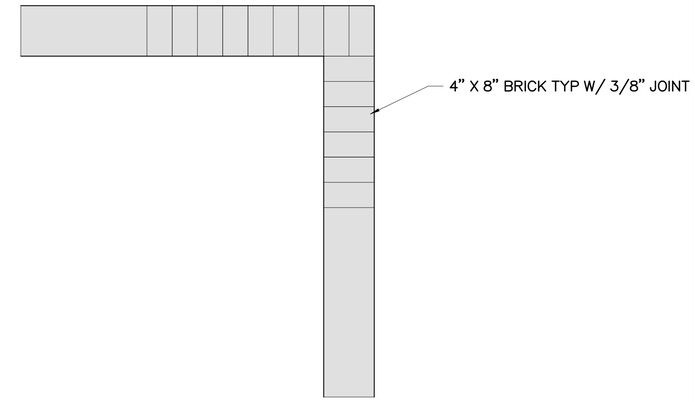

3 A–4.5 TYPICAL COPING PLAN DETAIL
SCALE Ⓑ

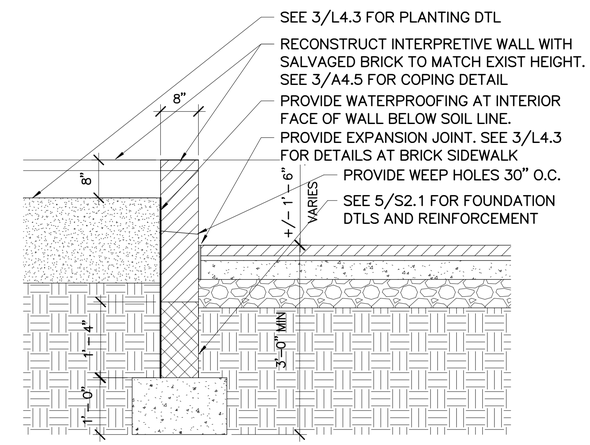

4 A–4.5 INTERPRETIVE FOUNDATION SECTION 5TH STREET
SCALE Ⓒ

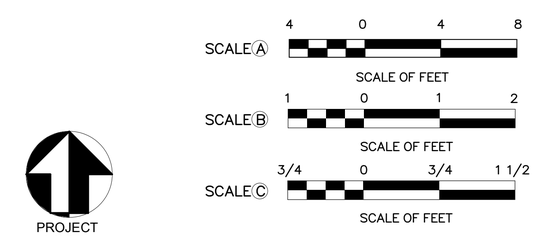

PROJECT NORTH

DESIGNED: KF DRAWN: TC TECH. REVIEW: KF DATE: 2/26/25	SUB SHEET NO. A-4.5	SECOND BANK BLOCK **OPTION #2 – INTERPRETIVE FOUNDATION WALLS** INDEPENDENCE NATIONAL HISTORICAL PARK	DRAWING NO. 391–186675 PMIS/PKG NO. 308228 SHEET 20 OF 41

C:\Users\katherinef\Documents\Independence Park Second Bank Block_022025_katherinefFAGFR.rvt

2/27/2025 2:44:31 PM

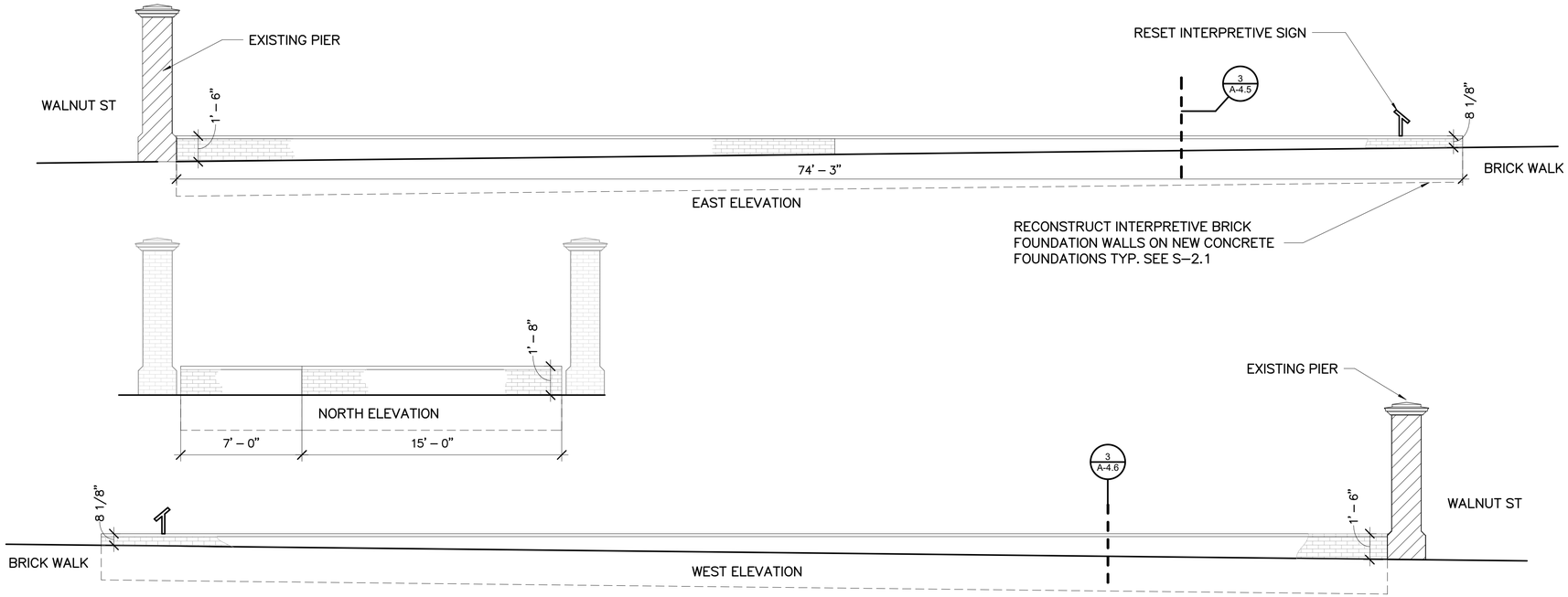

1 A–4.6 INTERPRETIVE FOUNDATION WALLS WALNUT STREET
SCALE (A)

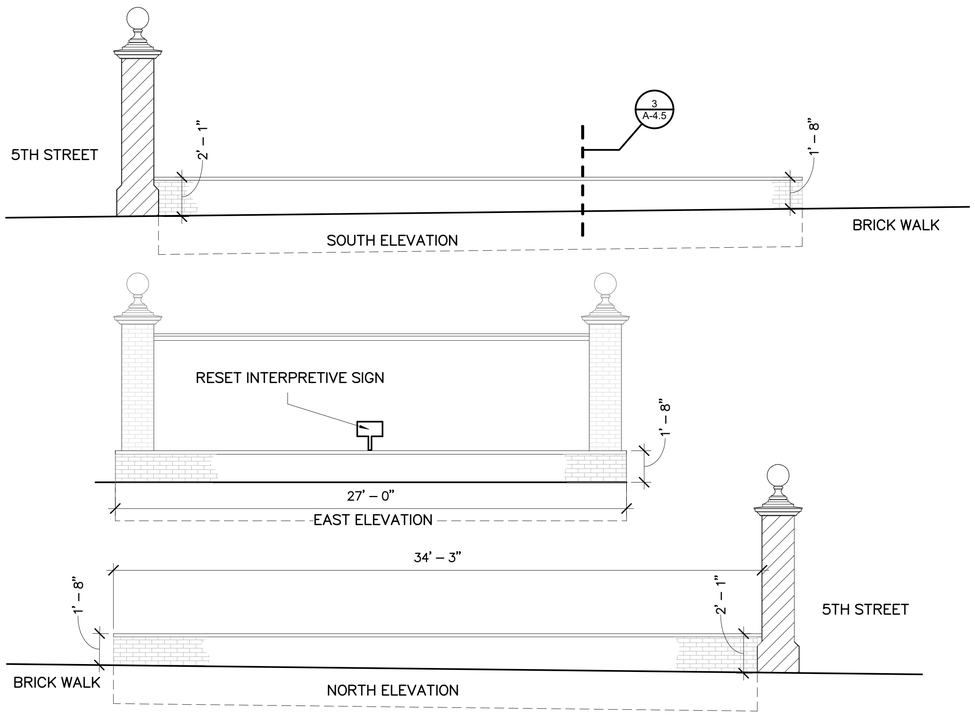

2 A–4.6 INTERPRETIVE FOUNDATION WALLS 5TH STREET
SCALE (A)

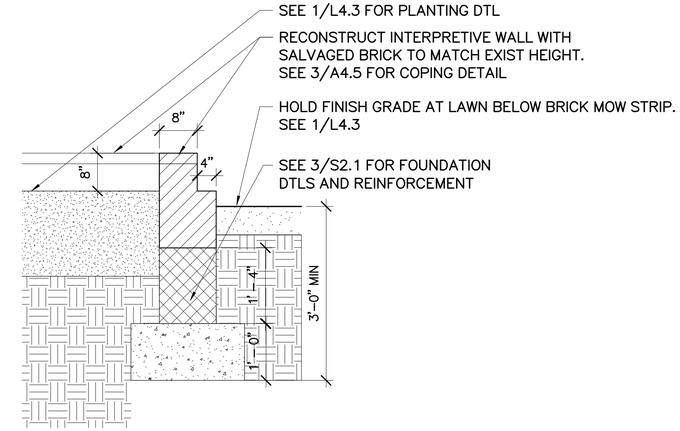

3 A–4.6 INTERPRETIVE FOUNDATION SECTION WALNUT STREET
SCALE (B)

PROJECT NORTH

SCALE (A) 4 0 4 8
SCALE OF FEET

SCALE (B) 3/4 0 3/4 1 1/2
SCALE OF FEET

DESIGNED: KF	SUB SHEET NO.	SECOND BANK BLOCK
CADD TC	A-4.6	OPTION #2 – INTERPRETIVE FOUNDATION WALLS ELEVATIONS
TECH. REVIEW: KF		INDEPENDENCE NATIONAL HISTORICAL PARK
DATE: 2/26/25		

DRAWING NO. 391–186675
PMIS/PKG NO. 308228
SHEET 21 OF 41

C:\Users\katherinef\Documents\Independence Park Second Bank Block_022025_katherinefFAGFR.rvt
2/27/2025 2:44:31 PM

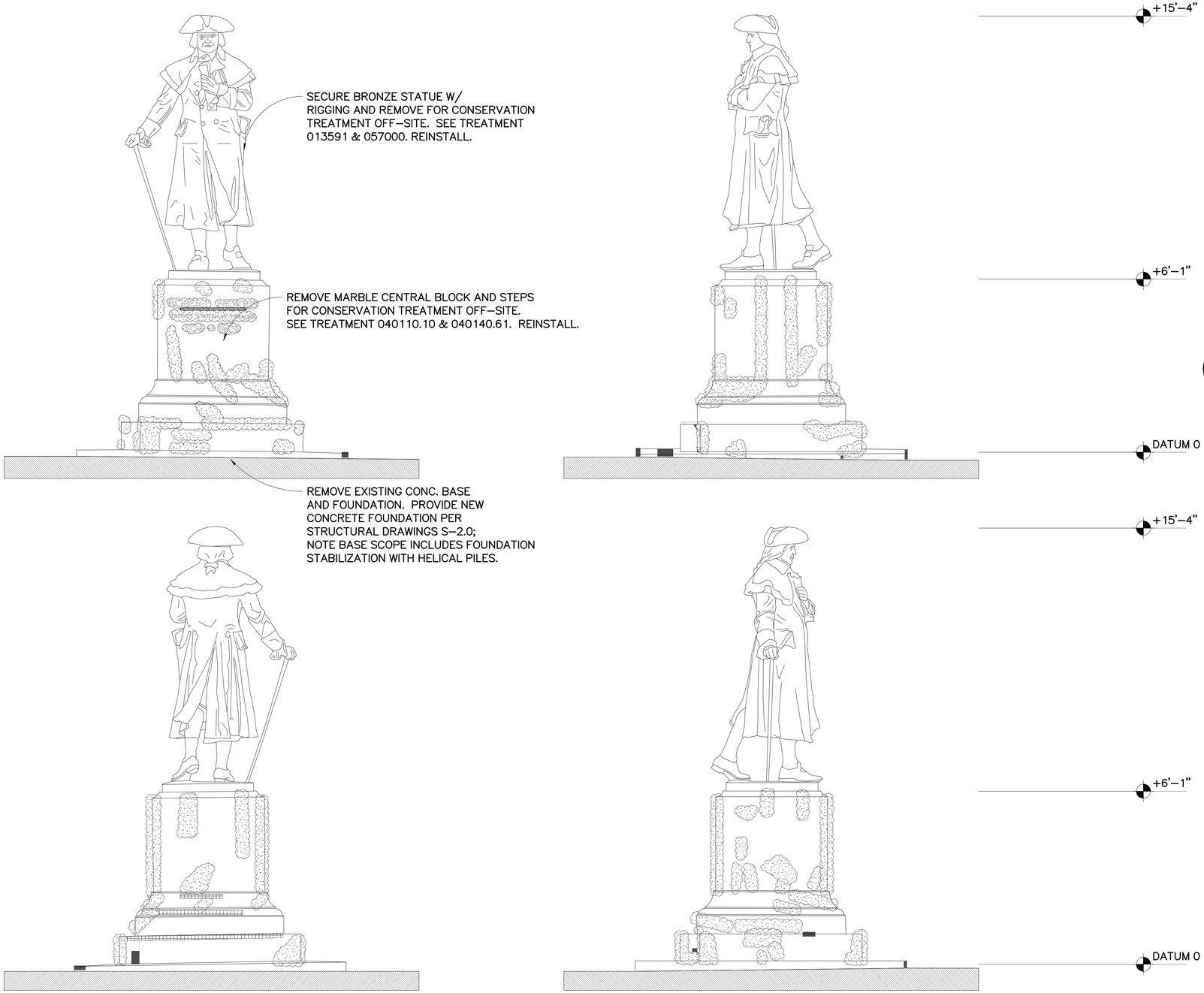

1 A–4.7 MORRIS STATUE ELEVATIONS
SCALE Ⓐ

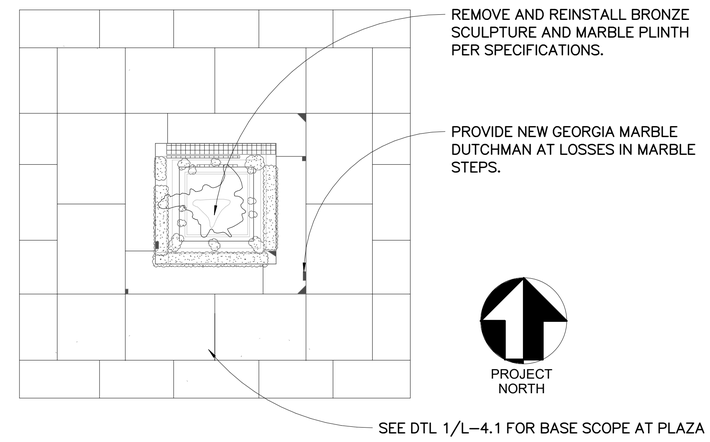

2 A–4.7 MORRIS STATUE PLAN
SCALE Ⓑ

TREATMENT LEGEND

- REMOVE COPPER STAINING PER SPEC – 040110.10
- PROVIDE MARBLE DUTCHMAN AT LOSS SPEC – 040140.61
- REMOVE WAX BUILDUP PER SPEC – 040110.10
- REMOVE GRAFFITI PER SPECIFICATIONS SPEC – 040110.10

SCALE Ⓐ 2 0 2 4 SCALE OF FEET

SCALE Ⓑ 4 0 4 8 SCALE OF FEET

DESIGNED: KF CADD TC TECH. REVIEW: KF DATE: 2/26/25	SUB SHEET NO. A–4.7	SECOND BANK BLOCK OPTION#3 – SCULPTURE CONSERVATION INDEPENDENCE NATIONAL HISTORICAL PARK	DRAWING NO. 391–186675 PMIS/PKG NO. 308228 SHEET 22 OF 41

C:\Users\katherinef\Documents\Independence Park Second Bank Block_022025_katherinefFAGFR.rvt

2/27/2025 2:44:33 PM

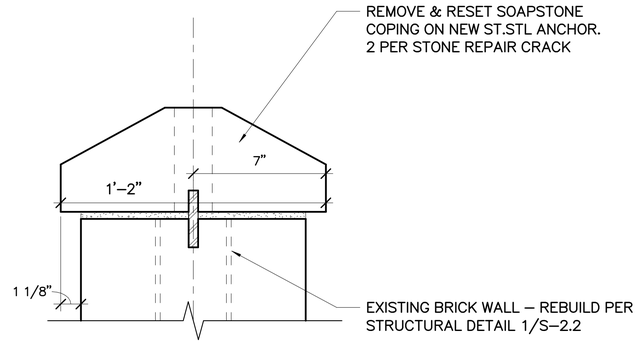

2 / A–5.0 SOAPSTONE COPING DETAILS @ WALNUT RETURN WALL (LOW) OPTION 1
SCALE B

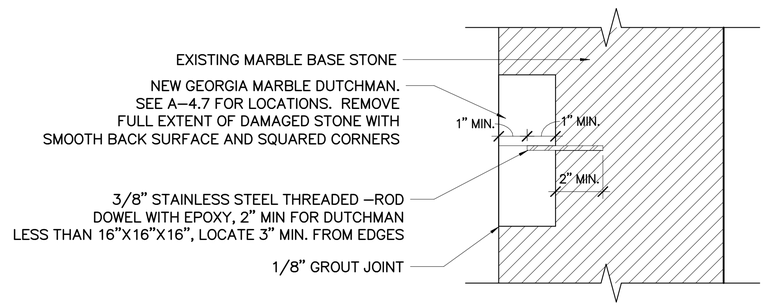

4 / A–5.0 MARBLE DUTCHMAN AT SCULPTURE BASE– OPTION 3
SCALE B

SCALE A 1 0 1 2 SCALE OF FEET

SCALE B 3 0 3 6 SCALE OF FEET

DESIGNED: KF CADD SY TECH. REVIEW: KF DATE: 2/26/25	SUB SHEET NO. A–5.0	SECOND BANK BLOCK DETAILS INDEPENDENCE NATIONAL HISTORICAL PARK	DRAWING NO. 391–186675 PMIS/PKG NO. 308228 SHEET 23 OF 41

C:\Users\katherinef\Documents\Independence Park Second Bank Block_022025_katherinefFAGFR.rvt
2/27/2025 2:44:33 PM

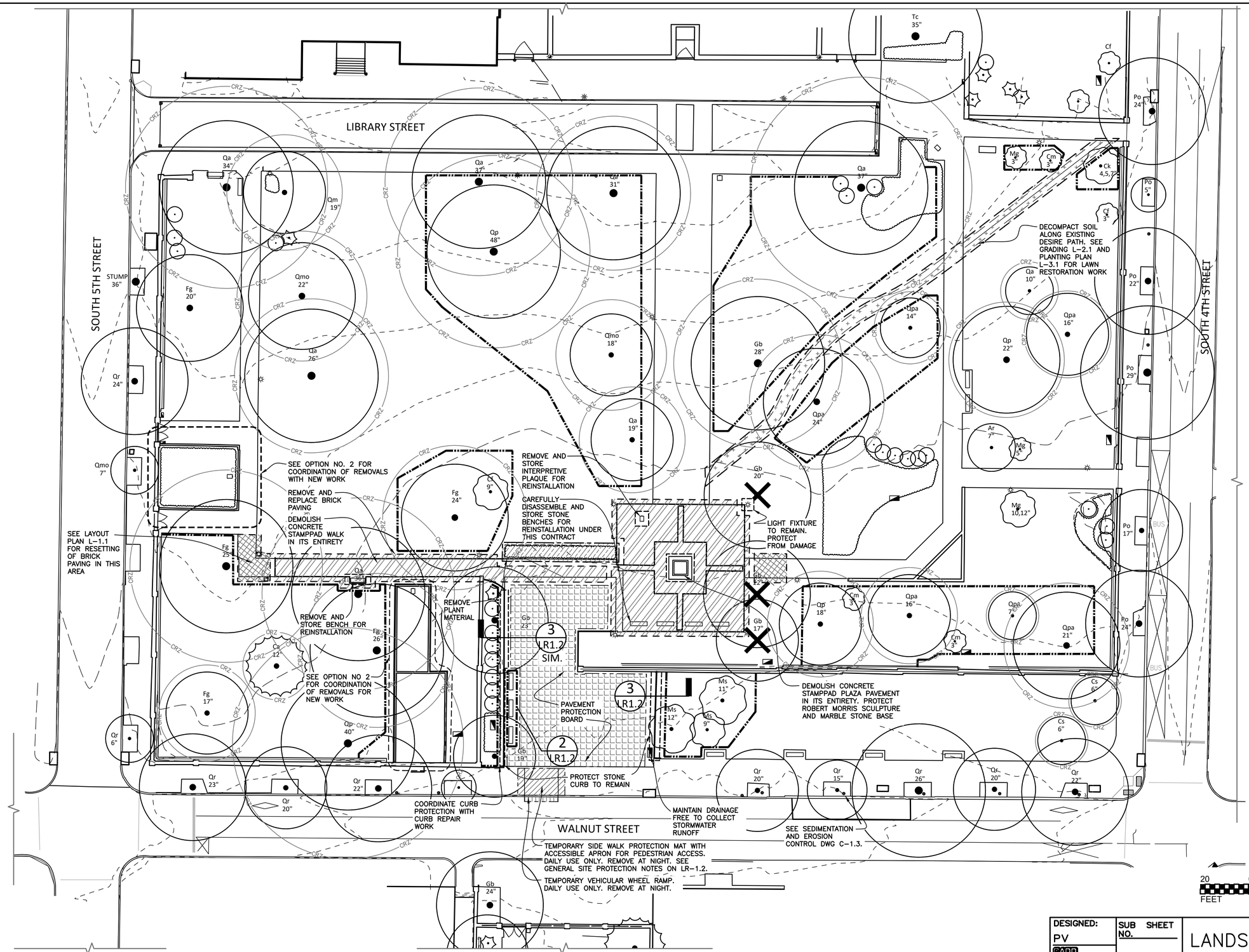

KEY:

- 1 FT CONTOUR
- WALLS/FENCE
- FOUNDATION MARKER
- SIGNAGE INTERPRETIVE
- SIGNAGE MAP
- SIGNAGE INFORMATIONAL
- ADA DETECTABLE PAVERS
- BOLLARDS
- DESIRE PATH
- LIGHT FIXTURE
- TREE REMOVAL
- CRITICAL ROOT ZONE
- TREE PROTECTION FENCING
- GROUND PROTECTION MATTING
- TEMPORARY GROUND PROTECTION & ACCESSIBLE APRON
- LIFT AND RESET BRICK PAVING
- REMOVE AND REPLACE BRICK PAVING
- REMOVE PLANTING
- SOIL DECOMPACTION (SEE ALSO GRADING PLAN L-2.1)

TREE NAME:

Key	Scientific Name	Common Name
Ar	Acer rubrum	Red Maple
Ca	Cedrus atlantica	Blue Atlas Cedar
Cf	Cornus florida	Flowering Dogwood
Ck	Cornus kousa	Kousa Dogwood
Cm	Cornus mas	Cornelian Cherry Dogwood
Cs	Crataegus sp.	Hawthorn
Fg	Fagus grandifloia	American Beech
Gb	Ginkgo biloba	Ginko
Ms	Magnolia sounagiana	Saucer Magnolia
Mg	Magnolia grandiflora	Southern Magnolia
Po	Platanus occidentalis	London Planetree
Qa	Qurcus alba	White Oak
Qm	Qurcus macrocarpa	Mossycup Oak
Qmo	Quercus montana	Chestnut Oak
Qp	Quercus phellos	Willow Oak
Qr	Quercus rubra	Red Oak
Qpa	Quercus palustris	Pin Oak
Tc	Tilia cordata	Littleleaf Linden
Ua	Ulms americana	American Elm

DESIGNED:	SUB SHEET NO.	SECOND BANK BLOCK	DRAWING NO.
PV	LR-1.1	LANDSCAPE REMOVALS AND PROTECTIONS PLAN	391-186675
CADD GM		INDEPENDENCE NATIONAL HISTORICAL PARK	PMIS/PKG NO. 308228
TECH. REVIEW: POD			SHEET 24 OF 41
DATE: 2/26/25			

C:\Users\SYamanadala\OneDrive - mills + schnoering architects, llc\Documents\Independence Park Second Bank Block_saly44SC8.rvt

9/14/2023 11:15:25 AM

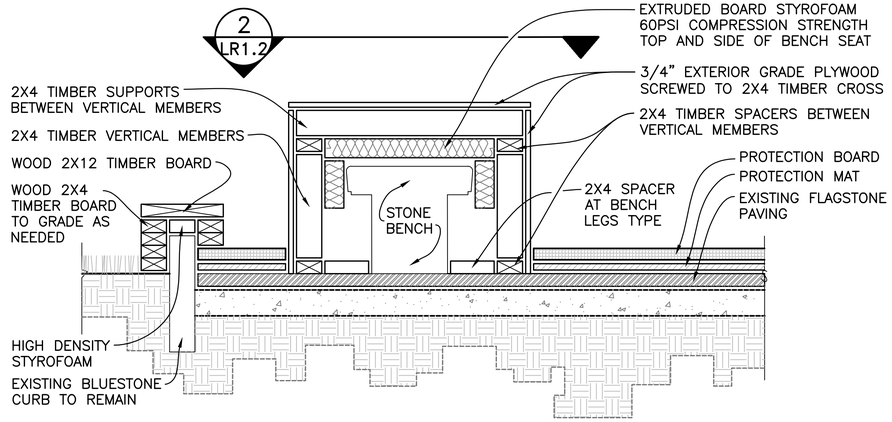

5 LR1.2 SECTION: BENCH PROTECTION

SCALE: 1"=1'-0"

GENERAL PROTECTION MATERIALS

PROTECTION BOARD
7.5'L X 14' W X 4"H HIGH-DENSITY POLYETHYLENE 600PSI MEGADECK HD BY SIGNATURE SYSTEMS OR APPROVED EQUIVALENT

PROTECTION MAT
1/2 INCH THICK VINYL LOOP COILS EXTRUDED FROM 100% PVC AND THERMALLY BONDED DOP FREE SKUDO ALL-TERRAIN MAT BY SKUDO USA OR APPROVED EQUIVALENT

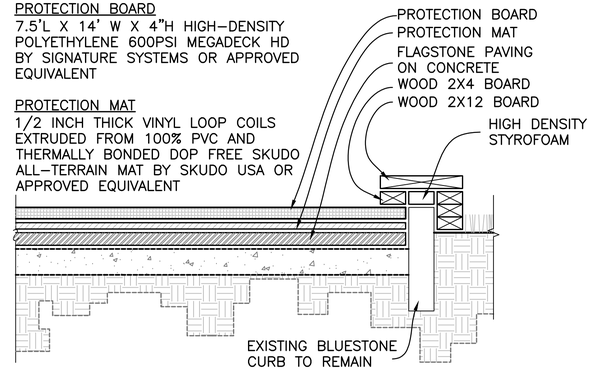

3 LR1.2 SECTION: GROUND PROTECTION MATTING

SCALE: 1"=1'-0"

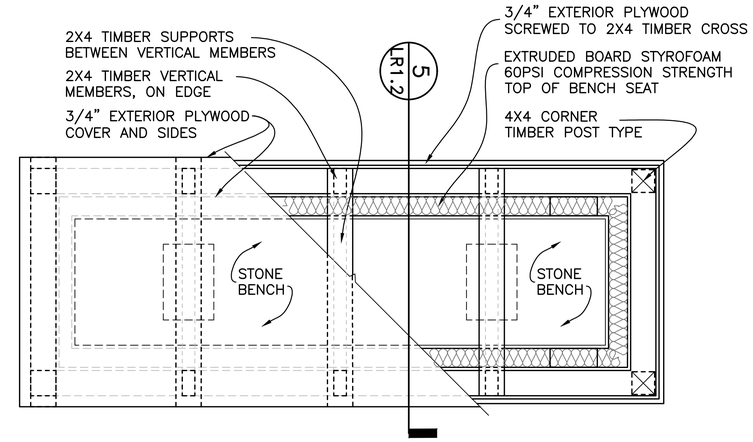

2 LR1.2 PLAN: BENCH PROTECTION

SCALE: 1"=1'-0"

GENERAL SITE PROTECTION NOTES:

- CONTRACTOR TO PARTICIPATE IN A PRE-CONSTRUCTION MEETING WITH THE COR AND DESIGNATED REPRESENTATIVE TO REVIEW PROPOSED SITE FENCING AND PROTECTION MEASURES. MEASURES TO BE MODIFIED AS DIRECTED.
- SEDIMENTATION AND EROSION CONTROL MEASURES SHALL BE COORDINATED WITH SITE PROTECTION MEASURES. SOIL EROSION AND SEDIMENTATION EROSION CONTROLS ARE TO BE IN PLACE PRIOR TO ANY SITE REMOVAL OR EXCAVATION OPERATIONS. SEE CIVIL ENGINEERING DRAWINGS C-1.3 AND C-5.2
- SEE EXISTING CONDITIONS SURVEY C-1.1 FOR BELOW GRADE UTILITIES TO THE EXTENT KNOWN. CONTRACTOR TO CONTACT (C.O.R.) AND ASSURE ALL NECESSARY PERMITS ARE SECURED IN ADVANCE OF EXCAVATION OPERATIONS.
- THE CONTRACTOR SHALL TAKE NECESSARY MEASURES TO AVOID DAMAGE TO EXISTING STONE, BRICK AND CONCRETE PAVEMENTS INCLUDING STONE CURBS, AND BENCHES INTENDED TO REMAIN FOLLOWING SITE IMPROVEMENT CONSTRUCTION OPERATIONS. CONTRACTOR TO REVIEW PAVEMENT AND SITE FEATURE PROTECTION MEASURE DETAILS AND MATERIALS, AND ADVISE THE C.O.R. IF MODIFICATION ARE DESIRED. THE CONTRACTOR IS RESPONSIBLE FOR SITE PROTECTION MEASURES. ANY DAMAGE OF SITE PAVEMENTS OR FEATURES IS THE RESPONSIBILITY OF THE CONTRACTOR TO MAKE NECESSARY REPAIRS AT THE CONTRACTORS COST.
- PRODUCTS AND MATERIALS FOR SITE PROTECTION MEASURES ARE TO BE SUBMITTED FOR REVIEW AND ACCEPTANCE.
- SHOP DRAWING FOR BENCH AND CURB PROTECTION MEASURES ARE TO BE SUBMITTED FOR REVIEW AND APPROVAL.
- THE CONTRACTOR SHALL SUBMIT DESIGN FOR CONSTRUCTION OF THE TEMPORARY SIDEWALK PROTECTION MAT. THE MAT SHALL BE RETRACTABLE SO AS NOT TO IMPEDED FREE PEDESTRIAN PASSAGE ACROSS THE FACE OF THE PROJECT AREA EXCEPT WHEN IN ACTIVE USE FOR LOADING OR UNLOADING CONSTRUCTION MATERIALS. THE TEMPORARY PROTECTION MAT SHALL NOT REMAIN IN PLACE POST ALLOWABLE CONSTRUCTION OPERATION HOURS.
- TEMPORARY CLOSURE OF PUBLIC SIDEWALKS SHALL BE ARRANGED AND APPROVED BY THE CITY OF PHILADELPHIA AND C.O.R. PEDESTRIAN CONTROLS AS REQUIRED BY THE CITY OF PHILADELPHIA ARE THE RESPONSIBILITY OF THE CONTRACTOR. THE CONTRACTOR SHALL OBTAIN ALL NECESSARY PERMITS.
- SITE PROTECTION FENCING LAYOUT AND GATE LOCATIONS ARE TO BE FINALIZED ON SITE WITH THE C.O.R. MAKING ADJUSTMENTS AS NECESSARY. THE CONTRACTOR IS RESPONSIBLE FOR CLOSURE OF THE PARK TO PUBLIC ACCESS DURING THE CONSTRUCTION PERIOD. TEMPORARY MEASURES FOR SECURING THE PARK AT GATED ACCESS ALONG FOURTH, FIFTH AND LIBRARY STREET ARE THE RESPONSIBILITY OF THE CONTRACTOR. EMERGENCY EGRESS PLANS ARE TO BE SUBMITTED TO THE C.O.R. FOR REVIEW AND ACCEPTANCE. EMERGENCY EGRESS PLANS TO COMPLY WITH LOCAL CODES.
- LIBRARY STREET BETWEEN FOURTH AND FIFTH STREETS IS TO REMAIN ACCESSIBLE TO THE PUBLIC.
- SPACE FOR STOCKPILING OF EXCAVATED MATERIAL(S) AND IMPORTED MATERIALS IS LIMITED AND SHALL BE APPROVED BY THE C.O.R. STOCKPILED MATERIALS SHALL BE COVERED AND PERIMETER PROTECTION SUCH AS SILT SOCK SECURED AT THE BASE TO PREVENT EROSION. SEE CIVIL DWG C-1.3 FOR TEMPORARY SOIL AND EROSION PROTECTION MEASURES

NOTES:
1. USE UNTREATED LUMBER FOR TREE PROTECTION FENCING.

2. SEE PLAN FOR EXTENT AND LOCATION OF FENCE. LOCATE ON SITE COR. SPACE POSTS AT ±10'-0" O.C MAXIMUM.

3. INSTALL TREE PROTECTION FENCING TO DRIP LINE OF TREE OR AS SHOWN ON SHEET LR-1.2 LANDSCAPE PROTECTION.

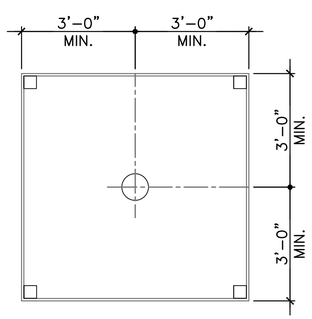

SEE PLAN LR-1.1 FOR EXTENT OF TREE PROTECTION

PLAN FOR SINGLE TREE

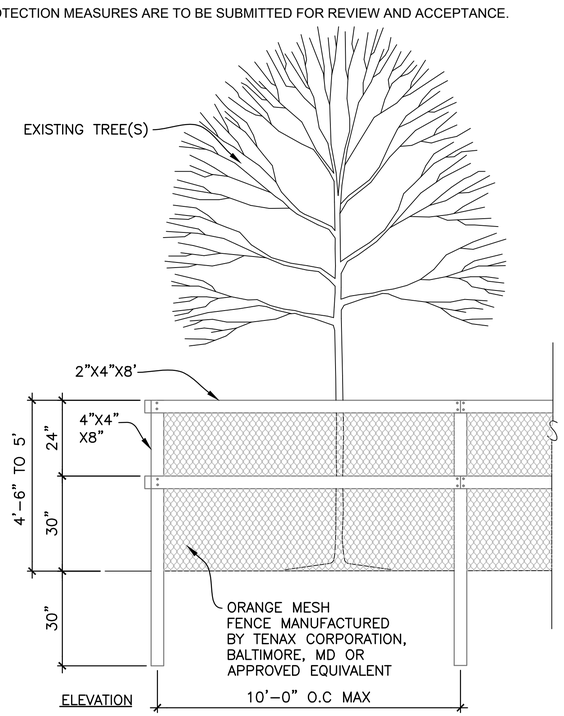

ELEVATION

4 LR1.2 SECTION: TREE PROTECTION FENCING

SCALE: 1/2"=1'-0"

NOTE:
- ALL FENCE MATERIALS SHALL BE GALVANIZED STEEL. CONCRETE BLOCKS SHALL BE 3000 PSI CONCRETE WITH GALVANIZED STEEL SLEEVE FOR POST EMBEDMENT.
- PROVIDE ACCESS GATES AT EACH TREE PROTECTION FENCE TO ALLOW FOR MAINTENANCE OPERATIONS. MINIMUM GATE OPENING 6'-0". PROVIDE PADLOCK TO SECURE ENCLOSURE.
- SEE CIVIL DWG FOR CONSTRUCTION FENCE LAYOUT

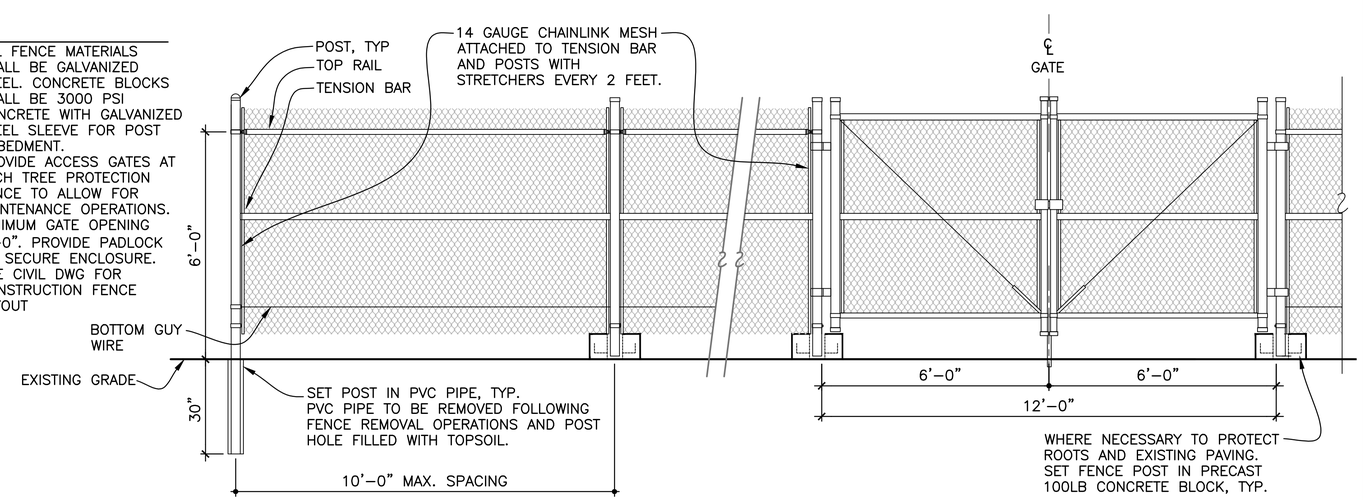

1 LR1.2 SECTION: CONSTRUCTION FENCING & GATE

SCALE: 1/2"=1'-0"

SCALE: 1/2"=1'-0" 1' 0 1' 2' 4' SCALE OF FEET

SCALE: 1"=1'-0" 0 1' 1' 2' SCALE OF FEET

DESIGNED: PV CADD GM TECH. REVIEW: POD DATE: 2/26/25	SUB SHEET NO. LR-1.2	SECOND BANK BLOCK LANDSCAPE PROTECTION DETAILS INDEPENDENCE NATIONAL HISTORICAL PARK	DRAWING NO. 391-186675 PMIS/PKG NO. 308228 SHEET 25 OF 41

2/28/2025 9:54 Y:\CT HL PROJECTS\NPS INDE BANK ROSE GARDEN\INDE DRAWINGS\INDE SECOND BANK TREATMENT\NPS INDE SECOND BANK PROTECTION DETAILS 26 FEB 2025.DWG

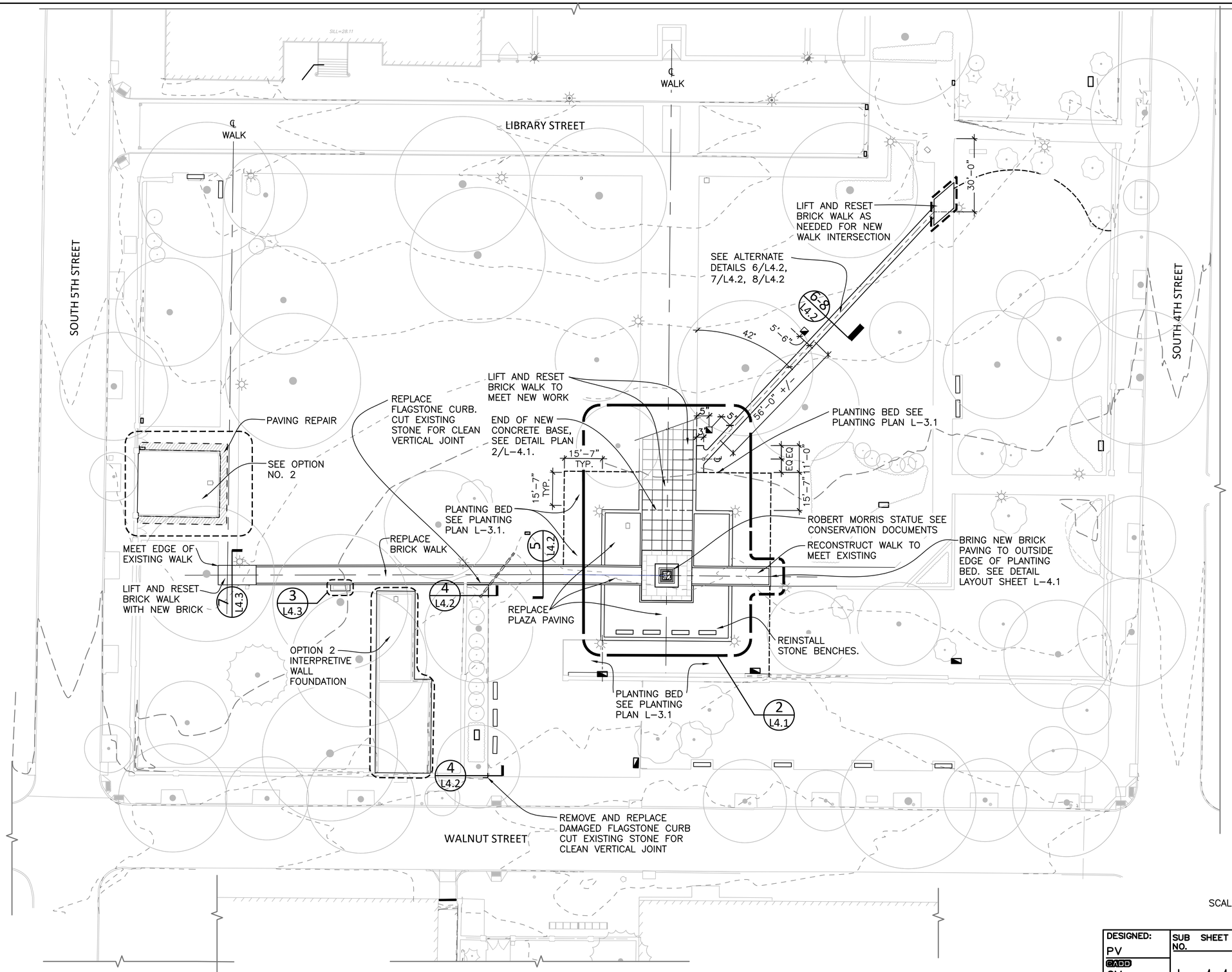

GENERAL SITE LAYOUT NOTES:

- THE CONTRACTOR TO COORDINATE LAYOUT OF SITE IMPROVEMENTS WITH ARCHITECTURAL AND CIVIL WORK. SEE ARCHITECTURAL SHEET A-3.0 AND CIVIL SHEETS C-1.2 AND C-5.1 FOR STORM WATER AND UTILITY INSTALLATION.
- THE CONTRACTOR TO BE AWARE THAT NEW WORK SHALL FOLLOW THE HISTORIC ALIGNMENTS MAINTAINING THE RECTILINEAR AND AXIAL RELATIONSHIPS ESTABLISHED UNLESS OTHERWISE INDICATED AND APPROVED BY THE C.O.R.
- OFFSET STAKES SHALL BE USED TO MAINTAIN ALIGNMENT OF BOTH NEW AND RECONSTRUCTED WALKS. CONTRACTOR TO ESTABLISH OF SET STAKES AND REVIEW WITH C.O.R.
- THE NEW WALKS IN THE NORTH EAST QUADRANT OF THE PARK SHALL BE STAKED ON SITE AND REVIEWED WITH THE C.O.R. MAKING ADJUSTMENTS AS REQUESTED PRIOR TO CONSTRUCTION.
- WHERE NEW WORK INTERSECTS WITH HISTORIC WORK TO REMAIN. REMOVAL, RESETTING AND REPLACEMENT BRICK PAVERS SHALL MATCH THE HISTORIC PATTERNS. WHEN THE ADDITION OF NEW BRICK NECESSARY, THE CONTRACTOR SHALL BLEND NEW PAVERS WITH HISTORIC PAVER TO AVOID LARGE FIELDS OF CONTRASTING COLOR AND FINISH.
- COORDINATE AREA DRAIN LOCATIONS WITH GRADING. SEE DRAWING L-2.1 GRADING PLAN.

SCALE: 1"=20'-0" 20' 0' 20' 40' SCALE OF FEET NORTH

DESIGNED: PV CADD GM TECH. REVIEW: POD DATE: 2/26/25	SUB SHEET NO. L-1.1	SECOND BANK BLOCK LANDSCAPE LAYOUT PLAN INDEPENDENCE NATIONAL HISTORICAL PARK	DRAWING NO. 391-186675 PMIS/PKG NO. 308228 SHEET 26 OF 41

C:\Users\SYamanadala\OneDrive - mills + schnoering architects, llc\Documents\Independence Park Second Bank Block_saiy44SC8.rvt
9/14/2023 11:15:25 AM

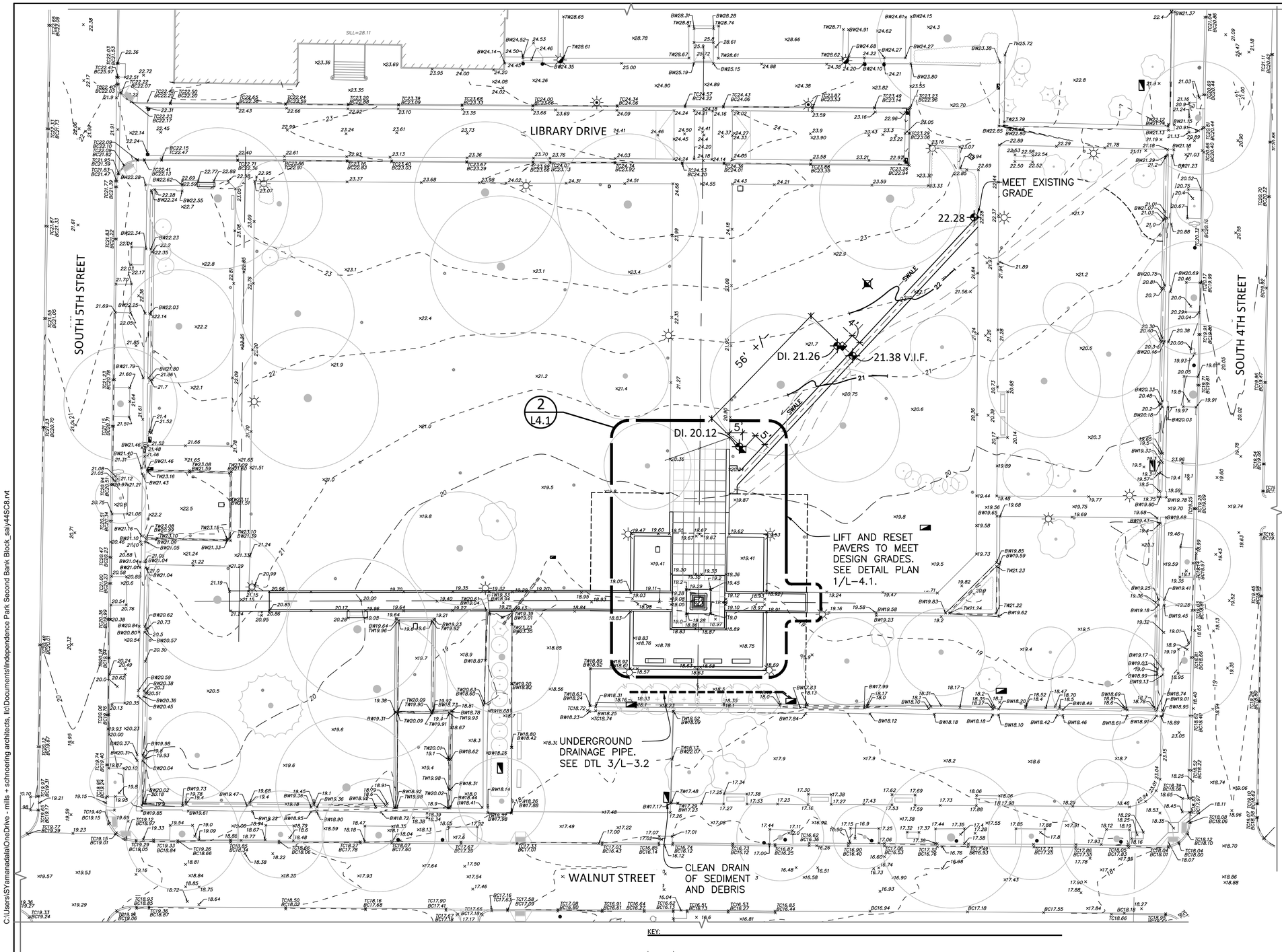

GENERAL GRADING NOTES:

- SEDIMENTATION AND EROSION CONTROL MEASURES SHALL BE IN PLACE PRIOR TO ANY SOIL PLACEMENT AND GRADING OPERATIONS. SEE CIVIL DWG. C-1.3 FOR DETAILS.
- FINISH GRADES SHALL GENERALLY FOLLOW THE EXISTING SITE GRADES AND DRAINAGE PATTERNS UNLESS OTHERWISE INDICATED ON THE GRADING PLANS AND DETAILS.
- SEE PLANS ON SHEET L-4.1 FOR DETAILED ENLARGEMENT OF THE MORRIS SCULPTURE PLAZA FINISH GRADES.
- SEE CIVIL ENGINEERING DRAWING C-1.2 FOR COORDINATION OF STORM DRAIN ELEVATIONS AND LOCATIONS. SEE ARCHITECTURAL DRAWINGS A-3.1 FOR GUTTER DRAINAGE AND REPAIR AND RECONSTRUCTION.
- THE NEW WALK ACROSS THE NORTHEAST QUADRANT SHALL BE GRADED TO MEET THE EXISTING GRADES AND WALK ELEVATIONS AT EITHER END AND SHALLOW SWALE ALONG THE UP-SLOPE SIDE TO DIRECT SURFACE WATER TO THE AREA DRAINS. CONTRACTOR TO PROVIDE GRADE STAKES AND REVIEW FINISH GRADES WITH THE C.O.R. IN ADVANCE OF WALK CONSTRUCTION.
- SURFACE PAVEMENTS SHALL BE PITCHED FOR POSITIVE DRAINAGE. CROSS PITCH SHALL NOT EXCEED 1.5 PERCENT.
- CONTRACTOR SHALL INSTALL GRADE STAKES FOR RECONSTRUCTION OF EXISTING WALKS AND REVIEW FINISH GRADE WITH C.O.R.
- THE FORMER DESIRE PATH IS TO BE DECOMPACTED IN PREPARATION FOR TOP DRESSING WITH PLANTING SOIL AND OVERSEEING TO RESTORE TURF COVER.
- DECOMPACTION SHALL INCLUDE A COMBINATION OF MECHANICAL LOOSENING AND PNEUMATIC AIR RAKING PRIOR TO PLACEMENT OF PLANTING SOIL. SEE SOIL SPECIFICATIONS SECTION: 329115 SOILS FOR REQUIREMENTS.
- THE EXISTING DESIRE PATH THROUGH THE NORTHEAST QUADRANT OF THE PARK SHALL BE RESTORED TO FINISH GRADES TO ALLOW FOR POSITIVE SURFACE DRAINAGE ACROSS THE TURF AREA TO AVOID A DRAINAGE TRENCH OR EROSION PATTERN ALONG THE FORMER TRAIL ALIGNMENT.
- REVIEW PLANTING PLAN L-3.1 FOR COORDINATION OF NEW PLANTINGS AND RESTORATION OF FORMER PLANTING BEDS TO TURF. FOLLOW SPECIFICATIONS FOR PLACEMENT OF PLANTING SOILS IN PREPARATION FOR SEEDING OPERATIONS.
- UTILITY TRENCHES ARE TO BE BACKFILLED AND COMPACTED FOLLOWING UTILITY DETAILS AND SPECIFICATIONS. PLACEMENT OF PLANTING SOILS FOR RESTORATION OF TURF SHALL NOT BE LESS THAN 4 INCHES THICK.
- RESTORATION OF LAWN AREAS DISTURBED BY CONSTRUCTION OPERATIONS SHALL FOLLOW DECOMPACTION REQUIREMENTS AS SPECIFIED IN THE SOILS SPECIFICATION SECTION: 329115.
- THE CONTRACTOR SHALL BE AWARE WHEN WORKING IN THE CRITICAL ROOT ZONE OF MATURE TREES (CRZ) DECOMPACTON MEASURES WITHIN THIS ZONE SHALL BE LIMITED TO AIR RAKING. REVIEW DECOMPACTION MEASURES WITH THE C.O.R. IN ADVANCE OF OPERATIONS. SEE LR-1.1 FOR CRITICAL ROOT ZONES.
- SEE DETAILS SECTIONS FOR FINISH GRADES AT THE INTERIOR AND EXTERIOR INTERPRETIVE FOUNDATIONS NOTED AS OPTION NO. 2

KEY:

1 FT CONTOUR	SIGNAGE INTERPRETIVE	LIGHT FIXTURE TYP. A
WALLS	SIGNAGE MAP	LIGHT FIXTURE TYP. B
GUIDERAIL	SIGNAGE INFORMATIONAL	LIGHT FIXTURE TYP. C
FOUNDATION MARKER	ADA DETECTABLE PAVERS	BOLLARD
DESIRE PATH	AREA DRAIN	

SCALE: 1"=20'-0"

20' 0' 20' 40'
SCALE OF FEET

NORTH

DESIGNED: PV	SUB SHEET NO.	SECOND BANK BLOCK	DRAWING NO. 391-186675
CADD GM	L-2.1	LANDSCAPE GRADING PLAN	PMIS/PKG NO. 308228
TECH. REVIEW: POD		INDEPENDENCE NATIONAL HISTORICAL PARK	SHEET 27 OF 41
DATE: 2/26/25			

C:\Users\SYamanadala\OneDrive - mills + schnoering architects, llc\Documents\Independence Park Second Bank Block_saly44SC8.rvt
9/14/2023 11:15:25 AM

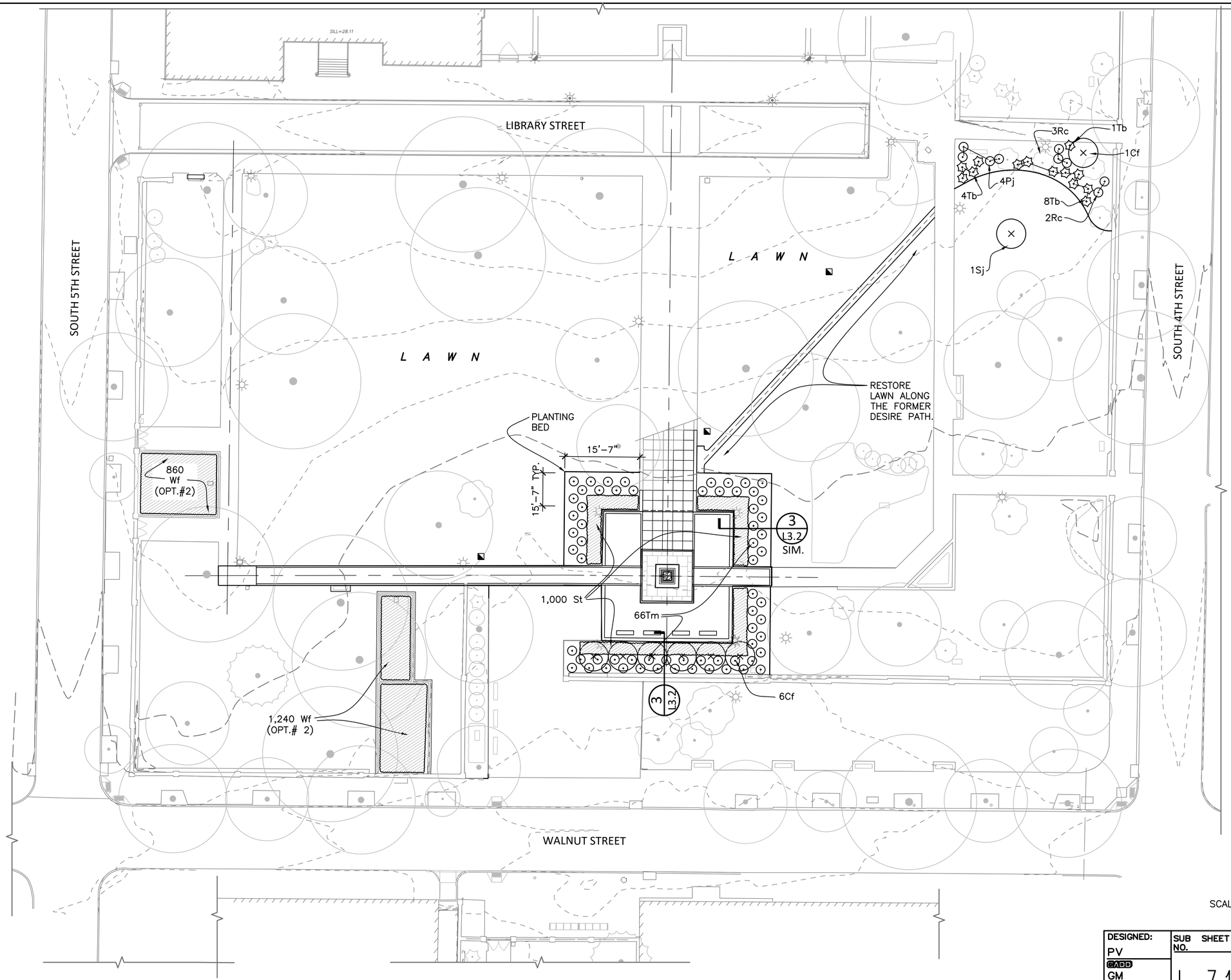

PLANTING NOTES:

1. SEE LANDSCAPE PROTECTION AND REMOVALS PLAN LR-1.1 FOR PROTECTION MEASURES AND SITE PROTECTION WORK. NOTIFY COR OF WORK NOT COMPLETED IN ACCORDANCE WITH THE LANDSCAPE REMOVALS AND PROTECTION CONTRACT DOCUMENTS.
2. PLANTING SOILS SHALL BE PLACED, AMENDED AND MANAGED TO MEET FINISH GRADE. NOTIFY COR OF SUB-GRADES THAT ARE NOT PROPERLY PREPARED FOR THE PLACEMENT OF PLANT MATERIALS.
3. NOTIFY COR OF GRADES THAT ARE NOT PROPERLY PREPARED, CONTAIN STANDING WATER, DEBRIS OR ARE OTHERWISE NOT READY FOR THE PLACEMENT OF PLANT MATERIALS. DO NOT PROCEED WITH PLANTING WORK UNTIL POOR CONDITIONS HAVE BEEN CORRECTED.
4. CONTRACTOR IS TO LOCATE AND STAKE ALL PLANT MATERIALS ON SITE, REVIEW WITH COR AND MAKE MODIFICATIONS AS DIRECTED IN ADVANCE OF PLANTING OPERATIONS.
5. TREES PITS ARE TO BE HAND DUG AND TREES CARTED VIA. BALL CARRIER. MACHINERY/EQUIPMENT WILL NOT BE ALLOWED ATOP FINISHED SOIL, TURF AND/OR LAWN AREAS.
6. PLANTING SHALL RECEIVE 2 INCHES OF ORGANIC MULCH.
7. SITE UTILITIES ARE NOT SHOWN. CONTRACTOR AND LANDSCAPE CONTRACTOR ARE TO REFER TO THE SURVEY PLAN. IF NECESSARY CALL THE LOCAL UTILITY AUTHORITY TO AID IN IDENTIFYING UNDERGROUND UTILITY LOCATIONS.
8. CONTRACTOR TO REFER TO PLANTING DETAILS FOR DEPTH OF SOIL AND SOIL PREPARATION FOR TREE AND SHRUB PLANTING
9. INDIVIDUAL TREES IN LAWN TO HAVE PLANTING SOIL TO A DEPTH OF NOT LESS THAN 30 INCHES IN AN AREA APPROXIMATELY 5'-0" BY 5'-0" SQUARE CENTERED ON THE TREE.
10. AREA DESIGNATED AS MOWN TURF SHALL BE HYDROSEEDED UNLESS OTHERWISE APPROVED BY THE COR.
11. SEE PLANTING SCHEDULE SHEET L-3.2 FOR TREE SPECIES, SIZE AND QUANTITIES.
12. RESTORE LAWN DISTURBED BY THE CONSTRUCTION. SEE ALSO GRADING PLAN DRAWING L-2.1

SCALE: 1"=20'-0" 20' 0' 20' 40' SCALE OF FEET NORTH

DESIGNED: PV CADD GM TECH. REVIEW: POD DATE: 2/26/25	SUB NO. SHEET L-3.1	SECOND BANK BLOCK PROPOSED LANDSCAPE PLANTING PLAN INDEPENDENCE NATIONAL HISTORICAL PARK	DRAWING NO. 391-186675 PMIS/PKG NO. 308228 SHEET 28 OF 41

C:\Users\SYamanadala\OneDrive - mills + schnoering architects, llc\Documents\Independence Park Second Bank Block_saiy44SC8.rvt
9/14/2023 11:15:25 AM

2/27/2025 2:39 Y:\CT HL PROJECTS\NPS INDE BANK ROSE GARDEN\INDE DRAWINGS\INDE SECOND BANK TREATMENT\NPS INDE SECOND BANK PLANTING DETAILS 26 FEB 2025.DWG

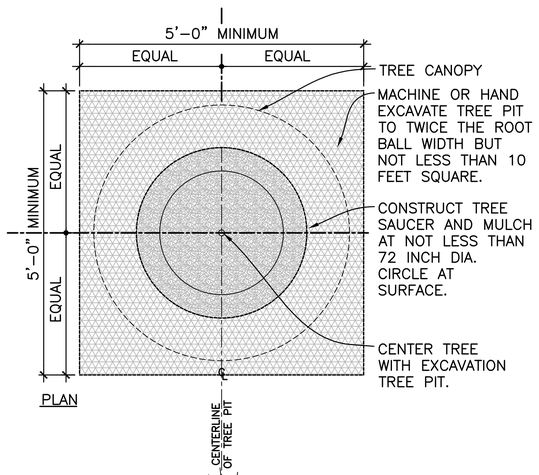

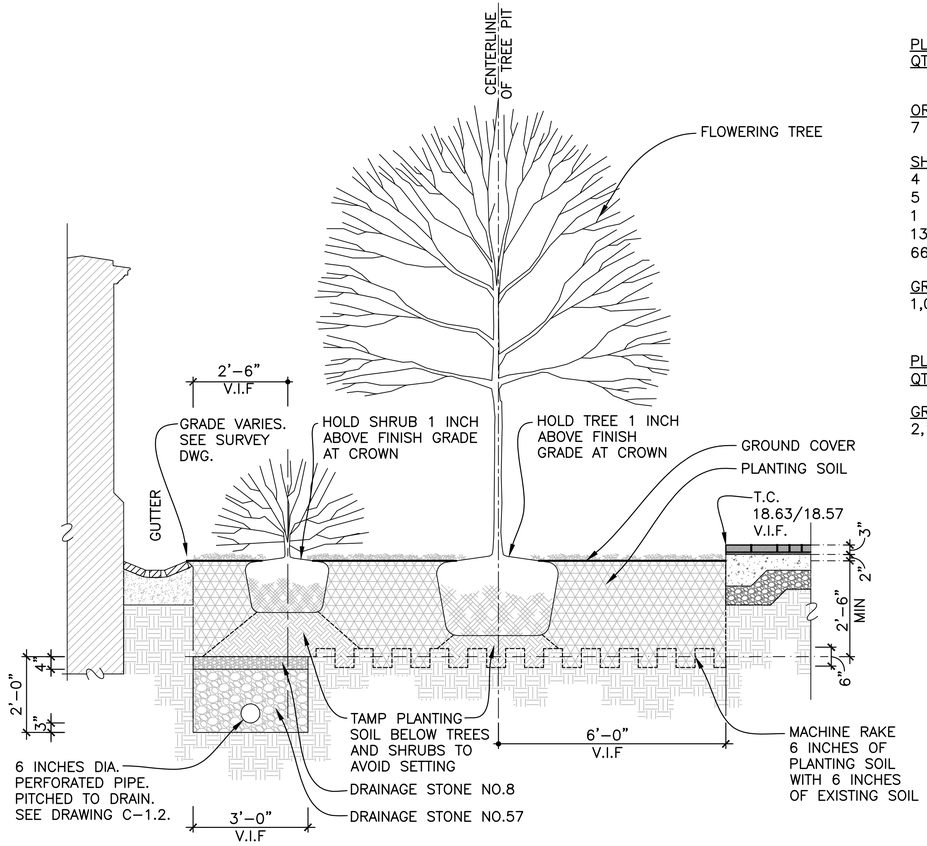

3 / L3.2 SECTION: PLANTING BED AT PLAZA TYP.

SCALE: 1/2"=1'–0"

PLANT MATERIALS LIST BASE CONTRACT WORK

QTY	KEY	SCIENTIFIC NAME	COMMON NAME	SIZE
ORNAMENTAL TREE				
7	Cf	Conus florida "Appalachian Spring"	Flowering Dogwood	2–2 1/2" CAL
SHRUBS				
4	Pj	Pieris japonicum	Japanese Andromeda	24–30" HT
5	Rc	Rhododendron carolinianum	Carolina Rhododendron	30–36" HT
1	Sj	Stewardia japonica	Japanese Stewardia	2–2.5" Cal.
13	Tb	Taxus baccata "Repandens"	English Yew	24"–30" Spread
66	Tm	Taxus x media "Densiformis"	Yew	30–36" Spread
GROUNDCOVER				
1,000	St	Sedum ternatum	Three leaf stone crop	2 1/2" POTS, 9" O.C.

PLANT MATERIALS LIST BASE OPTION NO. 2 (INTERPRETIVE FOUNDATIONS)

QTY	KEY	SCIENTIFIC NAME	COMMON NAME	SIZE
GROUNDCOVER				
2,100	WF	WALDSTEINIA FRAGARIOIDES	Barren Strawberry	2 1/2" POTS, 9" O.C.

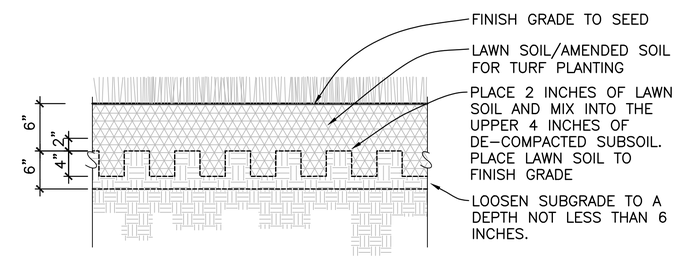

1 / L3.2 SECTION: LAWN RESTORATION

SCALE: 1"=1'–0"

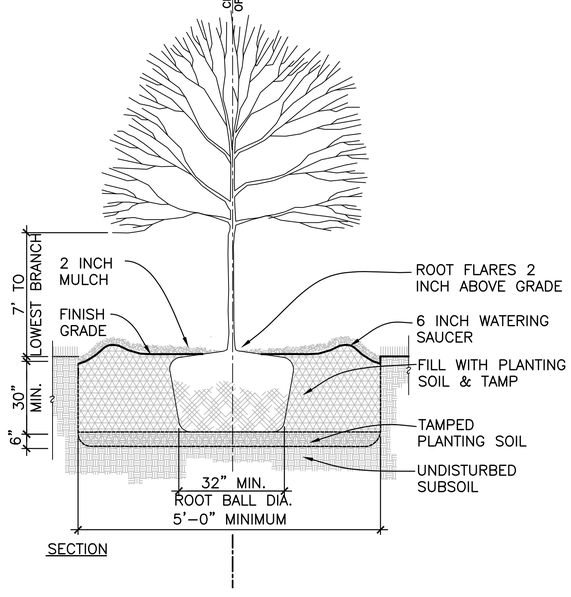

4 / L3.2 SECTION: TREE PLANTING

SCALE: 3/8"=1'–0"

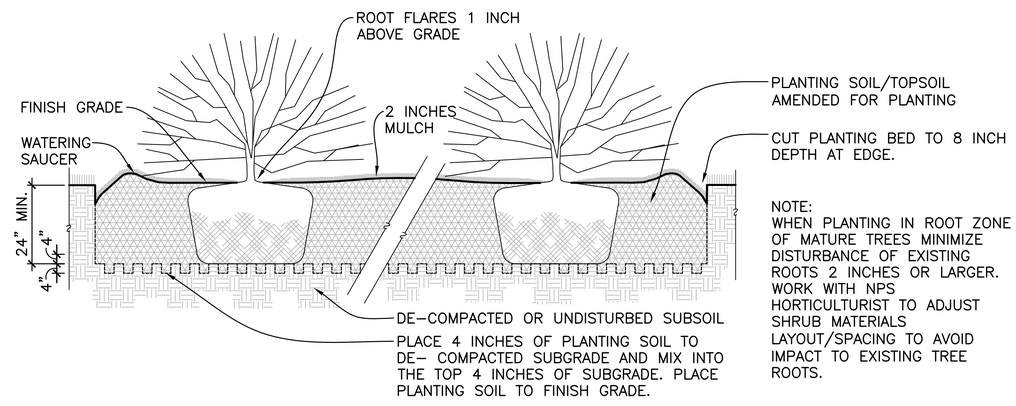

NOTE:
WHEN PLANTING IN ROOT ZONE OF MATURE TREES MINIMIZE DISTURBANCE OF EXISTING ROOTS 2 INCHES OR LARGER. WORK WITH NPS HORTICULTURIST TO ADJUST SHRUB MATERIALS LAYOUT/SPACING TO AVOID IMPACT TO EXISTING TREE ROOTS.

2 / L3.2 SECTION: SHRUB PLANTING AT PARK BORDERS

SCALE: 3/8"=1'–0"

SCALE: 3/8"=1'–0" 2' 0 2' 4' 6' SCALE OF FEET

SCALE: 1/2"=1'–0" 2' 0 2' 4' SCALE OF FEET

SCALE: 1"=1'–0" 1' 0 1' 2' SCALE OF FEET

DESIGNED: PV	SUB SHEET NO.	SECOND BANK BLOCK LANDSCAPE PLANTING DETAILS INDEPENDENCE NATIONAL HISTORICAL PARK	DRAWING NO. 391–186675
CADD GM	L–3.2		PMIS/PKG NO. 308228
TECH. REVIEW: POD			SHEET 29 OF 41
DATE: 2/26/25			

GENERAL PAVING NOTES:

- PROVIDE SHOP DWG.S OF BRICK PAVEMENT AND STONE PAVEMENT FOR C.O.R. REVIEW AND APPROVAL.
- PROVIDE EXPANSION JOINT LOCATION PLAN FOR C.O.R. REVIEW AND APPROVAL PRIOR TO PAVING CONSTRUCTION.
- EXPANSION JOINTS FOR STONE PAVEMENT TO BE EXPOSED THROUGH THE SURFACE.
- EXPANSION JOINTS FOR BRICK PAVING SET ON SAND TO BE HELD BELOW THE BRICK SURFACE.
- BRICK ON CONCRETE BASE SET ON SAND TO HAVE POLYMERIC SAND JOINTS.

NOTE:
TWO HORIZONTAL ROWS OF BRICK AT THE BORDERS OF THE PAVING AREA. FOR BASKET WEAVE PATTERN ARRANGE BRICKS IN PAIRS, ALTERNATING BETWEEN HORIZONTAL AND VERTICAL ORIENTATIONS. EACH BRICK MEASURING 4 INCHES BY 8 INCHES.

NOTE:
PLACE TWO HORIZONTAL ROWS OF BRICKS AT THE EDGE OF THE WALK. THE BASKET WEAVE PATTERN CONSISTS OF FIVE EQUAL SQUARE MODULES HORIZONTALLY, EACH APPROXIMATELY 4 FEET BY 4 FEET, ALTERNATING BETWEEN HORIZONTAL AND VERTICAL ORIENTATIONS. EACH MODULE SHOULD CONTAIN 6X12 BRICKS, WITH EACH BRICK MEASURING 4 INCHES BY 8 INCHES.

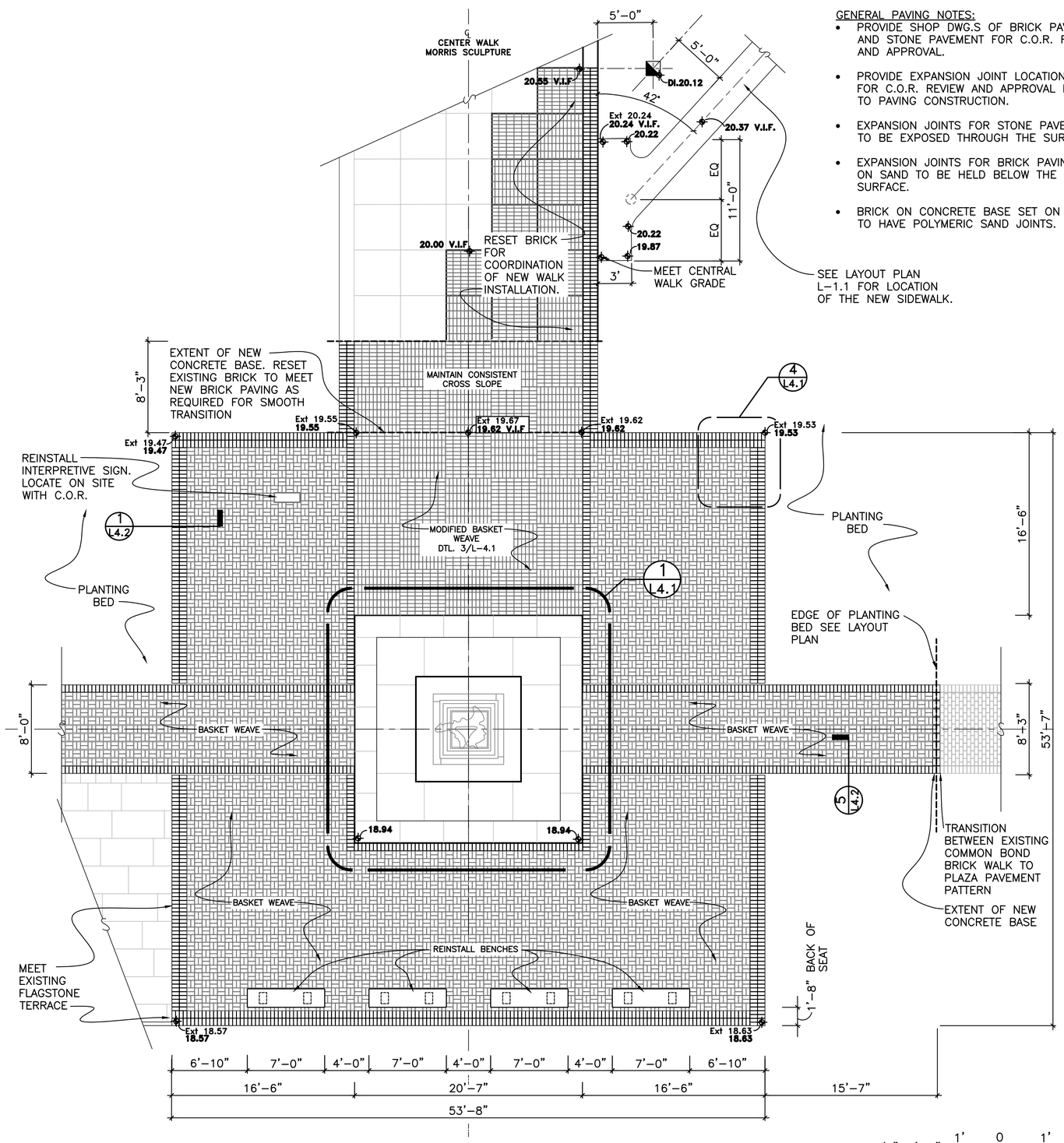

2 L4.1 PLAN: MORRIS SCULPTURE PLAZA PAVEMENT
SCALE: 3/16" = 1'-0"

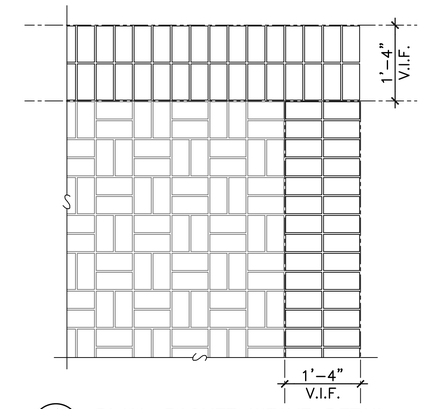

4 L4.1 PLAN: BASKET WEAVE DETAIL
SCALE: 3/4" = 1'-0"

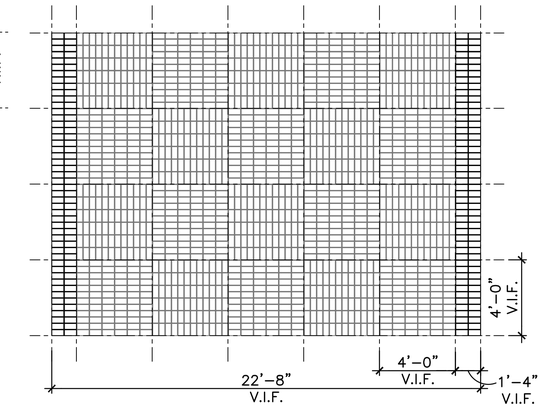

3 L4.1 PLAN: MODIFIED BASKET WEAVE
SCALE: 1/4" = 1'-0"

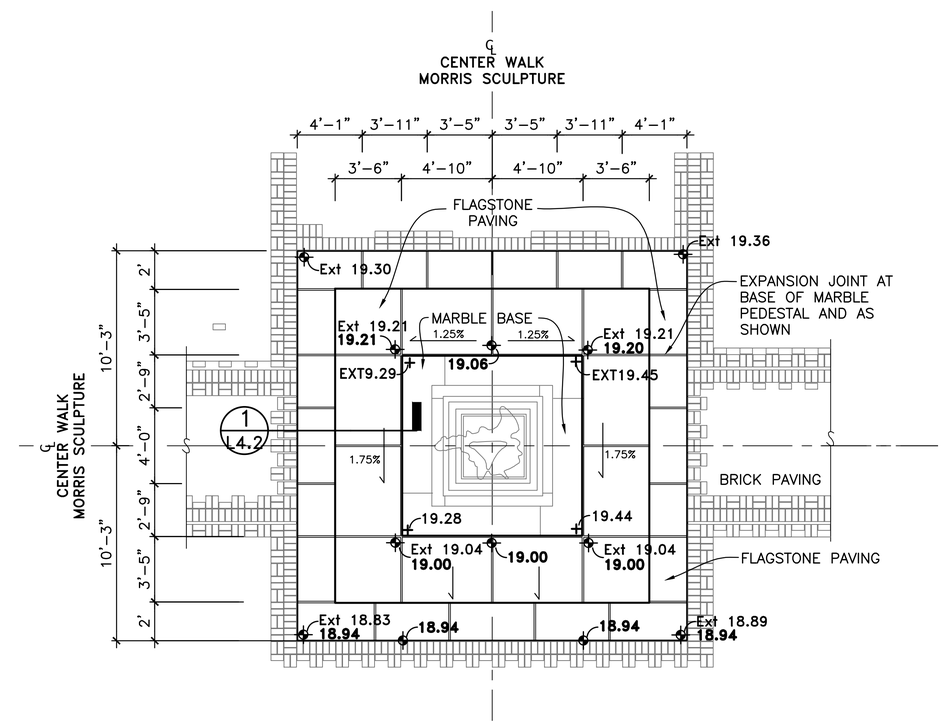

1 L4.1 PLAN: MORRIS SCULPTURE FLAGSTONE SURROUND
SCALE: 1/4" = 1'-0"

SCALE: 3/16"=1'-0" 4' 0 4' 8' 12' SCALE OF FEET

SCALE: 3/4"=1'-0" 1' 0 1' 2' 3' SCALE OF FEET

SCALE: 1/4"=1'-0" 4' 0 4' 8' SCALE OF FEET

DESIGNED: PV CADD GM TECH. REVIEW: POD DATE: 2/26/25	SUB SHEET NO. L-4.1	SECOND BANK BLOCK LANDSCAPE DETAILS INDEPENDENCE NATIONAL HISTORICAL PARK	DRAWING NO. 391-186675 PMIS/PKG NO. 308228 SHEET 30 OF 41

2/27/2025 3:00 Y:\CT HL PROJECTS\NPS INDE BANK ROSE GARDEN\INDE DRAWINGS\INDE SECOND BANK TREATMENT\NPS INDE SECOND BANK DETAIL SHEET 26 FEB 2025.DWG

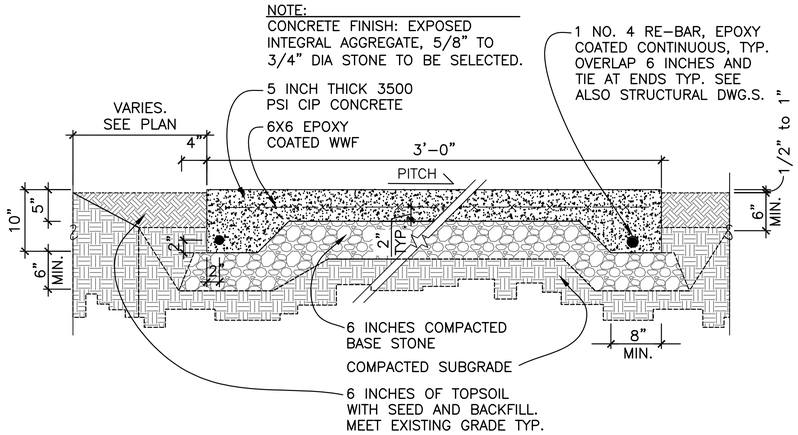

8 L4.2 SECTION: EXPOSED AGGREGATE CONCRETE
SCALE: 1" = 1'-0"

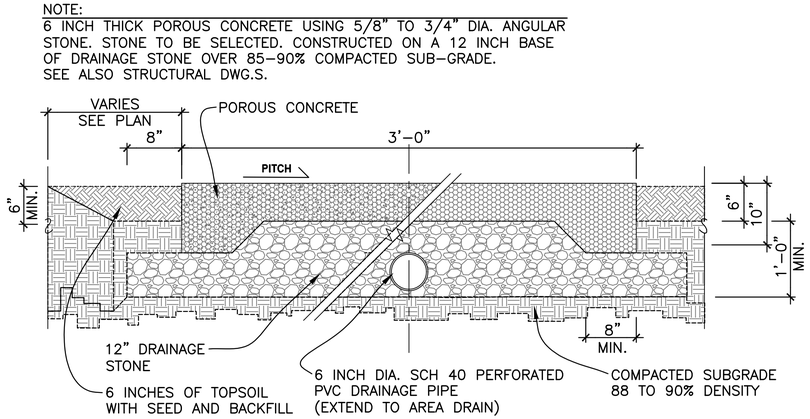

7 L4.2 SECTION: POROUS CONCRETE PAVEMENT ALTERNATE OPTION 4
SCALE: 1" = 1'-0"

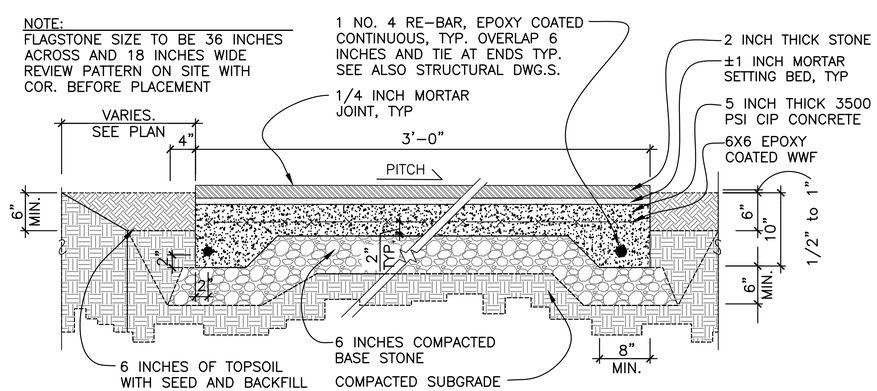

6 L4.2 SECTION: FLAGSTONE ON CONCRETE (ALTERNATE)
SCALE: 1" = 1'-0"

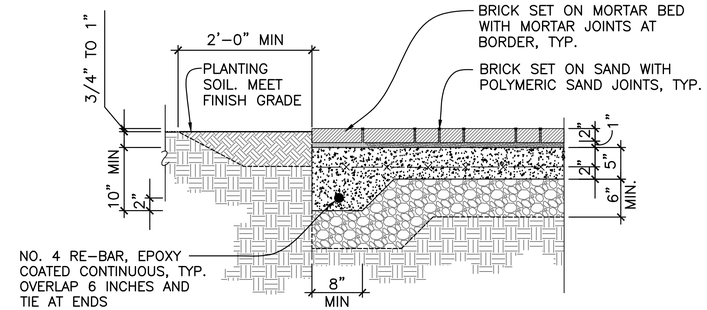

5 L4.2 SECTION: BRICK ON CONCRETE W/SAND SETTING BED
SCALE: 1" = 1'-0"

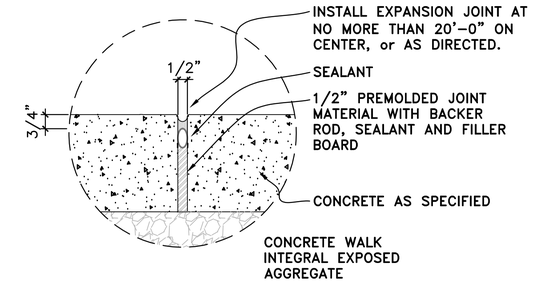

3 L4.2 SECTION: EXPANSION JOINT
SCALE: N.T.S.

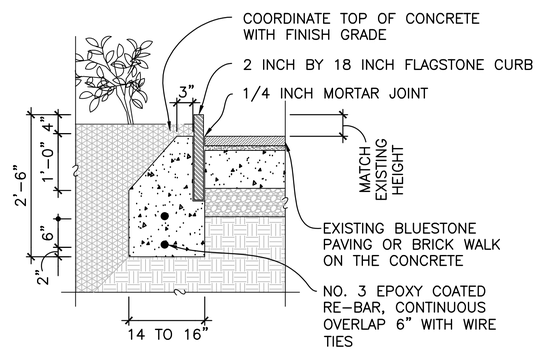

4 L4.2 SECTION: FLAGSTONE CURB AT WALNUT STREET PLAZA
SCALE: 3/4" = 1'-0"

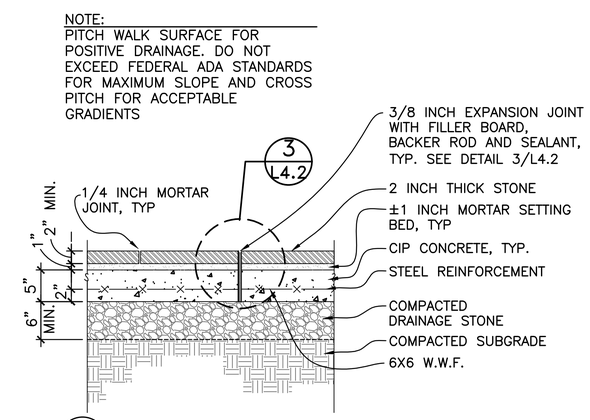

2 L4.2 SECTION: FLAGSTONE ON CONCRETE
SCALE: 1" = 1'-0"

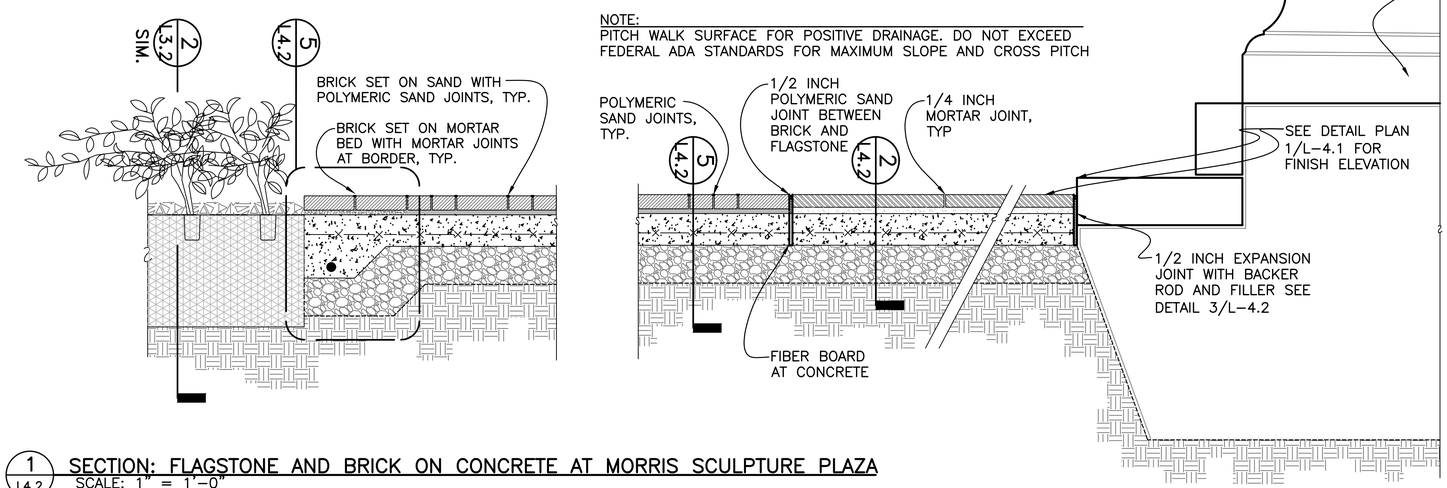

1 L4.2 SECTION: FLAGSTONE AND BRICK ON CONCRETE AT MORRIS SCULPTURE PLAZA
SCALE: 1" = 1'-0"

SCALE: 3/4"=1'-0" 1' 0 1' 2' 3' SCALE OF FEET

SCALE: 1"=1'-0" 1' 0 1' 2' SCALE OF FEET

DESIGNED: PV CADD GM TECH. REVIEW: POD DATE: 2/26/25	SUB SHEET NO. L-4.2	SECOND BANK BLOCK LANDSCAPE DETAILS INDEPENDENCE NATIONAL HISTORICAL PARK	DRAWING NO. 391-186675 PMIS/PKG NO. 308228 SHEET 31 OF 41

2/28/2025 9:57 Y:\CT HL PROJECTS\NPS INDE BANK ROSE GARDEN\INDE DRAWINGS\INDE SECOND BANK TREATMENT\NPS INDE SECOND BANK DETAIL SHEET 26 FEB 2025.DWG

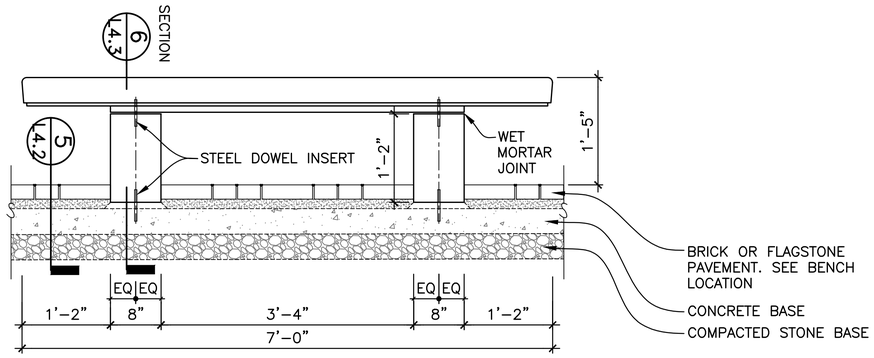

9 L4.3 ELEVATION: SOAPSTONE BENCH
SCALE: 1" = 1'-0" (OPTION NO. 5)

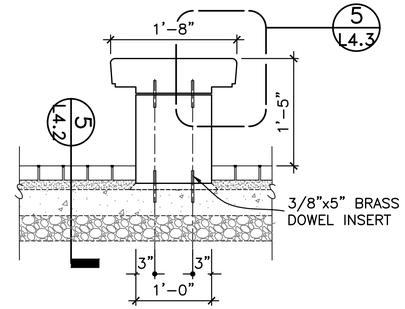

6 L4.3 SECTION: SOAPSTONE BENCH
SCALE: 1" = 1'-0" (OPTION NO. 5)

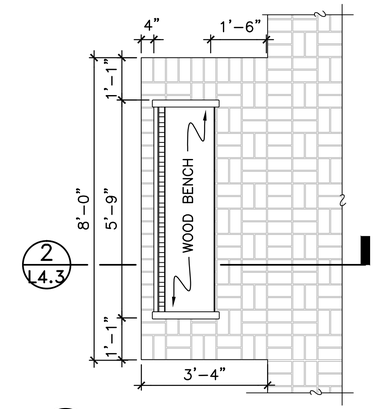

3 L4.3 PLAN: SEATING BAY & BENCH
SCALE: 1/2" = 1'-0"

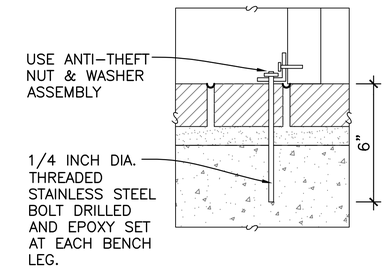

10 L4.3 SECTION: BENCH INSTALLATION
SCALE: 3" = 1'-0"

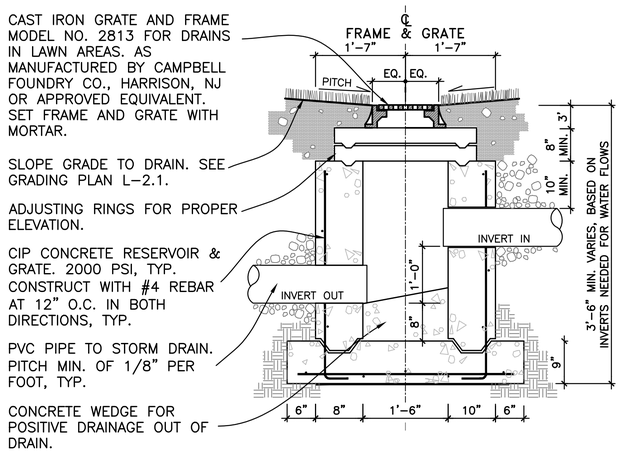

8 L4.3 SECTION: CATCH BASIN FRAME & GRATE
SCALE: 3/4" = 1'-0"

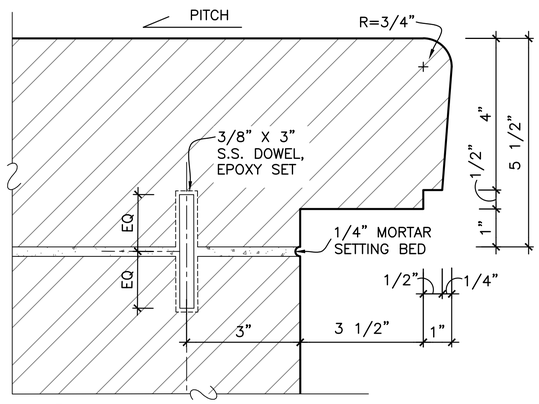

5 L4.3 SECTION: SOAPSTONE BENCH
SCALE: 6" = 1'-0" (OPTION NO. 5)

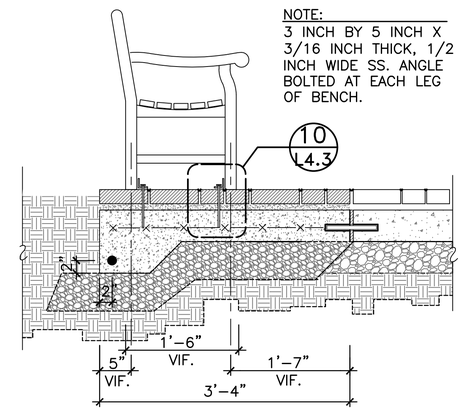

2 L4.3 SECTION: SEATING BAY & BENCH
SCALE: 1" = 1'-0"

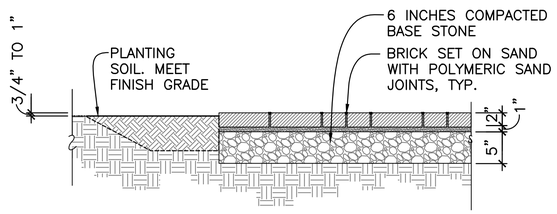

7 L4.3 SECTION: BRICK ON SAND SETTING BED
SCALE: 3/4" = 1'-0"

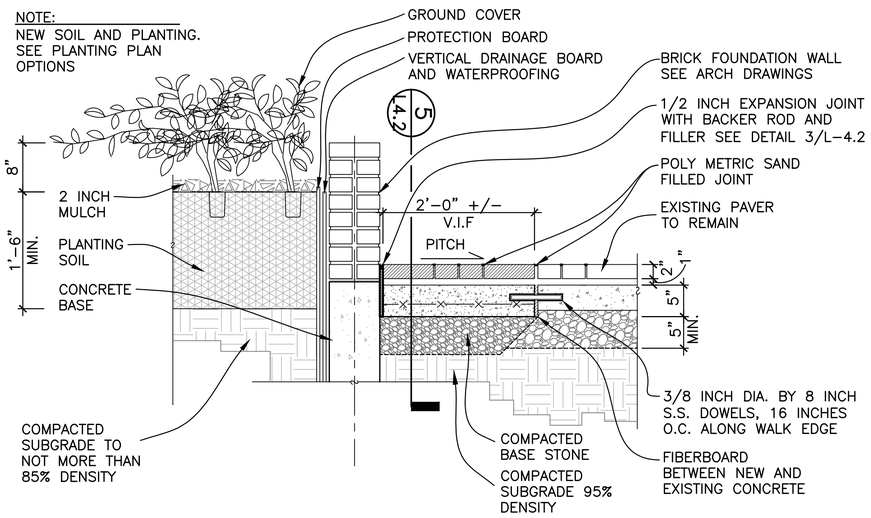

4 L4.3 SECTION: INTERPRETIVE FOUNDATION MARKER
SCALE: 1" = 1'-0" GROUND COVER PLANTING (OPTION NO. 2)

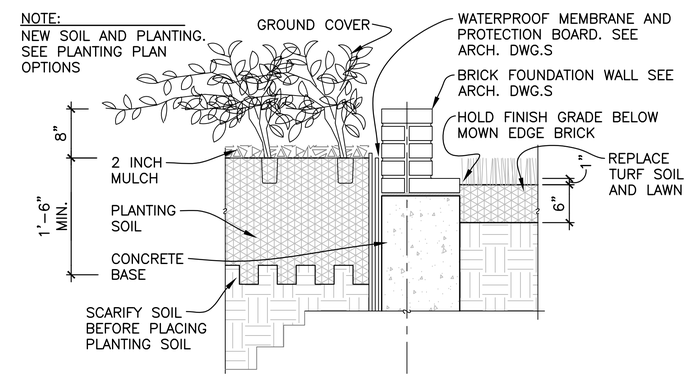

1 L4.3 SECTION: INTERPRETIVE FOUNDATION MARKER
SCALE: 1" = 1'-0" GROUND COVER PLANTING (OPTION NO. 2)

SCALE: 6"=1'-0" — 2" 1" 0 2" 4" — SCALE OF INCH

SCALE: 1/2"=1'-0" — 2' 0' 2' 4' — SCALE OF FEET

SCALE: 3/4"=1'-0" — 1' 0 1' 2' 3' — SCALE OF FEET

SCALE: 1"=1'-0" — 1' 0 1' 2' — SCALE OF FEET

DESIGNED: PV	SUB SHEET NO.	SECOND BANK BLOCK LANDSCAPE DETAILS	DRAWING NO. 391-186675
CADD GM	L-4.3		PMIS/PKG NO. 308228
TECH. REVIEW: POD		INDEPENDENCE NATIONAL HISTORICAL PARK	SHEET 32 OF 41
DATE: 2/26/25			

2/27/2025 3:13 Y:\CT HL PROJECTS\NPS INDE BANK ROSE GARDEN\INDE DRAWINGS\INDE SECOND BANK TREATMENT\NPS INDE SECOND BANK DETAIL SHEET 26 FEB 2025.DWG

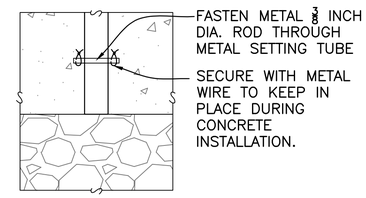

3 / L4.4 SECTION:INTERPRETIVE PLAQUE INSTALLATION
SCALE: 3" = 1'-0"

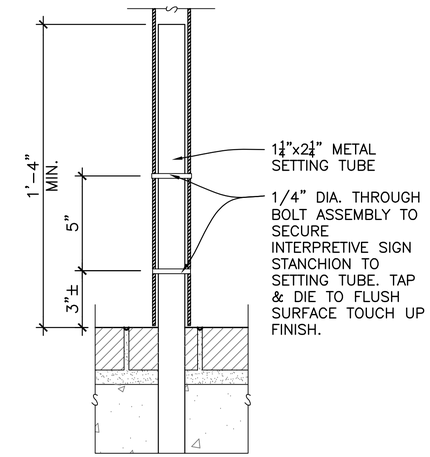

2 / L4.4 SECTION:INTERPRETIVE PLAQUE INSTALLATION
SCALE: 3" = 1'-0"

GENERAL NOTES:

1. CONTRACTOR TO INSPECT THE REMOVED AND STORED INTERPRETATION SIGN AND NOTIFY THE COR OF ANY DAMAGE OR CONDITIONS WHICH WOULD PREVENT, OR RENDER THE SIGN PANEL UNDESIRABLE TO BE REINSTALLED.
2. REVIEW MEANS AND METHODS OF MODIFYING THE EXISTING SIGN STANCHION AND INSTALLATION OF METAL SETTING TUBE SUPPORTS WITH COR. FOR APPROVAL, MAKE ADJUSTMENT(S) AS REQUESTED.
3. COORDINATE THE SIZE OF THE METAL TUBE POST AND SETTING TUBE FOR THE CORRECT SIZE TO SLIDE THE SIGN POST OVER THE SETTING TUBES EASILY TO FORM A SNUG FIT AND ALLOW FOR EXPANSION AND CONTRACTION WITHOUT DAMAGE TO THE METAL OR METAL FASTENERS.
4. REMOVE THE EXISTING ANCHOR FLANGE BY CLEARLY CUTTING THE BASE OF METAL POST.
5. MEASURE THE POST HEIGHT TO DETERMINE PROPER INSTALLATION HEIGHT IN ACCORDANCE WITH AMERICANS FOR DISIBILITY ACT GUIDEANCE, DETERMINE LENGTH AND INSTALLATION DEPTH OF INTEIROR SETTING TUBE. PROVIDE SPACERS OR OTHER METHOD TO SATISFY INSTALLATION HEIGHT CRITERIA.
6. MAKE ANY NECESSARY REPAIRS OR FINISH TOUCH-UP FOLLOWING REMOVAL OF BOTTOM ANCHOR FLANGE IN PREPARATION FOR REINSTALLATION OVER INTERIOR SETTING TUBE POSTS
7. SET METAL SIGN POST SUPPORTS OVER EMBEDDED SETTING TUBE MEMBERS, SECURE INTERPRETIVE SIGN PANEL USING TAP & DIE THROUGH ANCHORS, FLUSH WITH FINISH SURFACE OF EACH POST.
8. CLEAN AND TOUCH UP ANY MARKS OR BLEMISHES ON FINISH PANEL SURFACES.

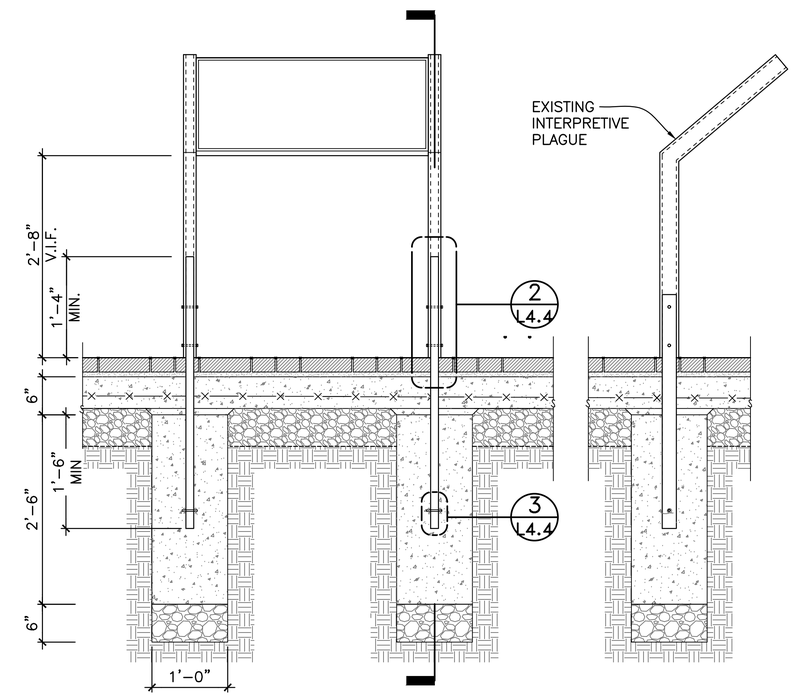

1 / L4.4 ELEVATION & SECTION:INTERPRETIVE PLAQUE INSTALLATION
SCALE: 1" = 1'-0"

SCALE: 1"=1'-0" 1' 0 1' 2' SCALE OF FEET

DESIGNED: PV CADD GM TECH. REVIEW: POD DATE: 2/26/25	SUB SHEET NO. L-4.4	SECOND BANK BLOCK LANDSCAPE DETAILS INDEPENDENCE NATIONAL HISTORICAL PARK	DRAWING NO. 391-186675 PMIS/PKG NO. 308228 SHEET 33 OF 41

2/28/2025 9:59 Y:\CT HL PROJECTS\NPS INDE BANK ROSE GARDEN\INDE DRAWINGS\INDE SECOND BANK TREATMENT\NPS INDE SECOND BANK DETAIL SHEET 26 FEB 2025.DWG

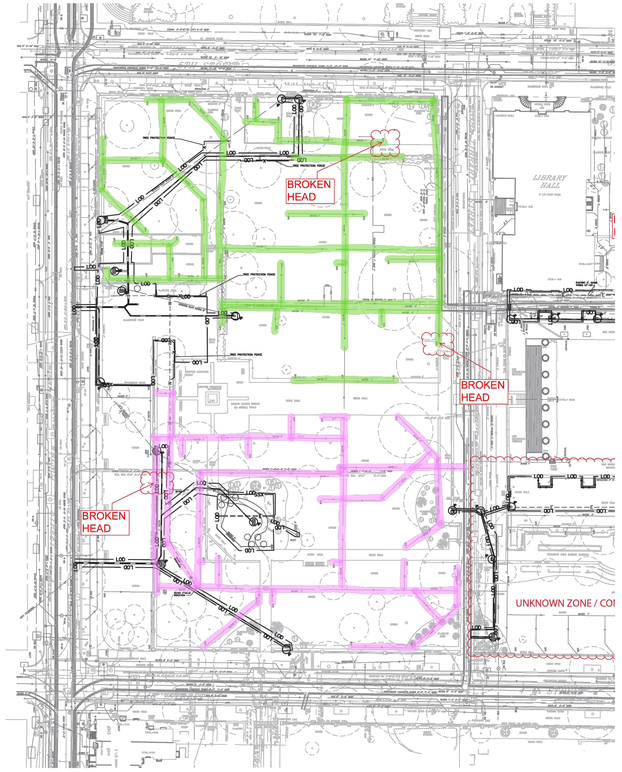

2 L1.0 SECOND BANK 2016 PARTIAL IRRIGATION ZONE PLAN

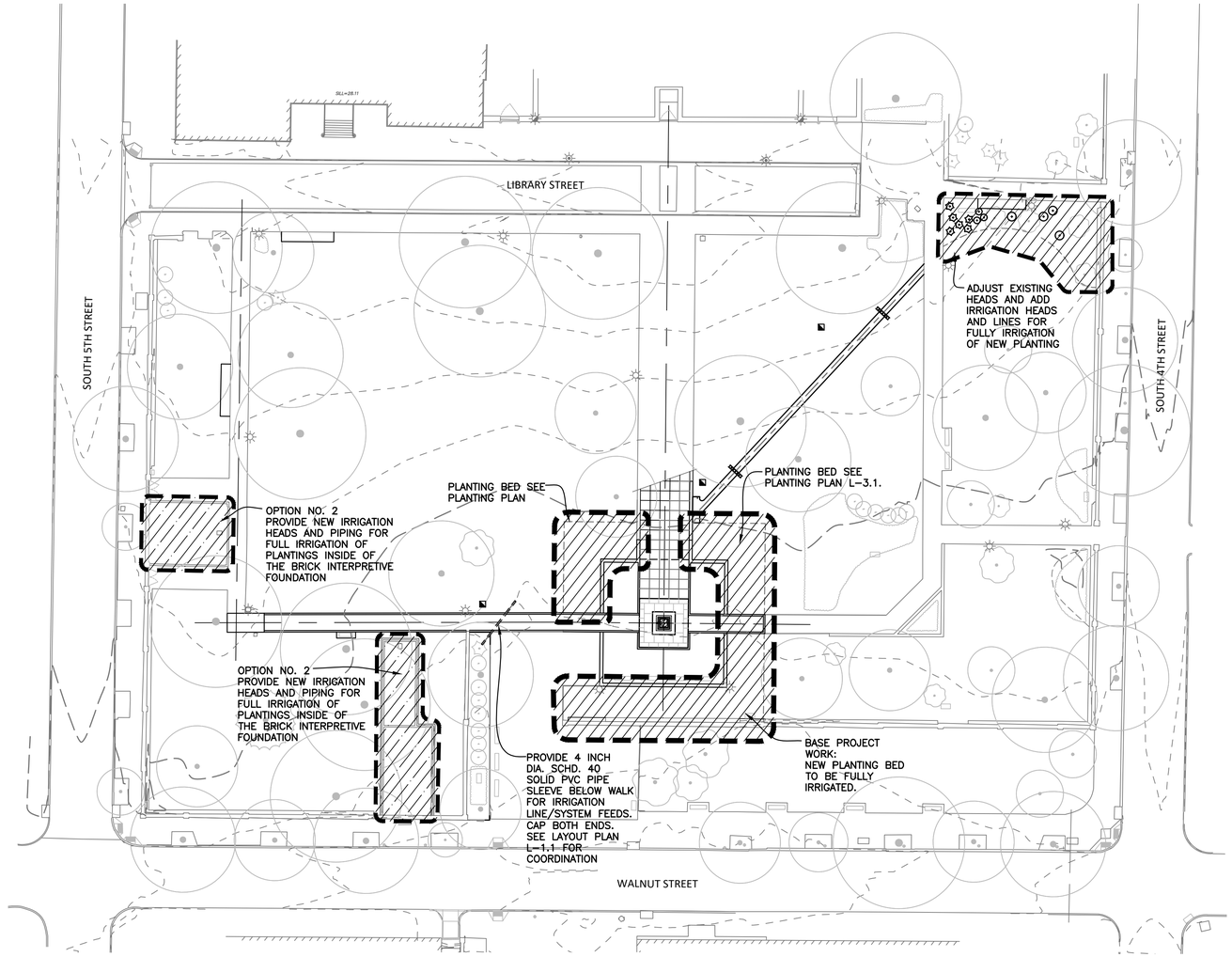

1 L1.0 SECOND BANK IRRIGATION DIAGRAM

KEY:

- 1 FT CONTOUR
- WALLS
- GUIDERAIL
- ADA DETECTABLE PAVERS
- BOLLARDS
- BIKE RACK
- PROPOSED AREA DRAIN
- LIGHT FIXTURE TYP. A
- LIGHT FIXTURE TYP. B
- LIGHT FIXTURE TYP. C

IRRIGATION OPTIONS KEY:

- BASE CONTRACT IRRIGATION MODIFICATION
- OPTION 2 IRRIGATION MODIFICATION

NORTH

30' 0' 30' 60'

GENERAL IRRIGATION SYSTEM DESIGN AND OPERATION NOTES

1. THIS IS NOT AN IRRIGATION PLAN. THE PLAN AND SPECIFICATIONS PROVIDE GENERAL DIRECTIONS FOR THE ADAPTATION AND DESIGN OF THE EXISTING IRRIGATION SYSTEM TO ADDRESS THE MODIFIED LANDSCAPE AND PLANTING AREAS. THE CONTRACTOR SHALL PROVIDE DESIGN DRAWINGS AND SPECIFICATIONS FOR SYSTEM COMPONENTS AND LAYOUT TO MEET PERFORMANCE SPECIFICATIONS FOR AREAS OF THE CONTRACT WORK. SEE ALSO SPECIFICATIONS SECTION 33 2811 OF THE PROJECT MANUAL.
2. IRRIGATION SYSTEM EXPANSION AND MODIFICATION IS TO BE COORDINATED WITH UPGRADES TO THE EXISTING IRRIGATION SYSTEM PUMPS AND OPERATIONAL SYSTEM COMPONENTS AS PART OF THE MECHANICAL AND ELECTRICAL WORK. SEE M&E DRAWINGS AND SPECIFICATIONS.
3. IN GENERAL, SYSTEM COMPONENTS SHALL BE COMPATIBLE WITH THE EXISTING SYSTEM, EQUIPMENT AND CONTROLS, PROVIDE AND INSTALL NEW COMPONENTS. REUSE OF EXISTING REMOVED OR PRE-USED SYSTEM COMPONENTS WILL NOT BE ACCEPTABLE.
4. SYSTEM DESIGN AND INSTALLATION TO BE UNDERTAKEN BY A CERTIFIED IRRIGATION PROFESSIONAL IRRIGATION CONTRACTOR AND MEET ALL STANDARDS AS OUTLINED BY THE AMERICAN IRRIGATION INSTITUTE (CITE CORRECT ORGANIZATION)
5. IRRIGATION SYSTEM SHALL FIT THE LANDSCAPE CONDITIONS AS COMPLETED AS PART OF THE BASE CONTRACT WORK INCLUDING AREAS IDENTIFIED IN EACH OF THE OPTIONS AS ACCEPTED BY THE OWNER
6. IRRIGATION SYSTEMS FOR HISTORIC BRICK FOUNDATION TO BE MADE OPERATIONAL FOR EXISTING CONTRACT UNDER BASE CONTRACTOR WORK OR SHALL BE REMOVED AND NEW SYSTEM COMPONENTS BE INSTALLED UNDER OPTION 2 AS ACCEPTED.
7. THE IRRIGATION SYSTEM DESIGN AND LAYOUT: PROVIDE HEAD TO HEAD COVERAGE
8. DESIGN TO WORK WITH THE EXISTING SERVICE WATER PRESSURE AS COORDINATED WITH THE MECHANICAL SYSTEM UPGRADES UNDER THE M&E WORK.
9. CONTRACTOR TO PROVIDE: IRRIGATION SYSTEM SHOP DRAWINGS AND SPECIFICATIONS FOR REVIEW AND ACCEPTANCE, ALL PRODUCT DATA INCLUDING CUT SHEETS AND OPERATION MANUALS.
10. PROJECT WORK IS WITHIN A NATIONAL HISTORIC LANDMARK PROPERTY. CONTRACTOR TO OPERATE WITHIN PROJECT CONTRACT LIMITS FOR WORK IMPLEMENTATION ONLY. ANY WORK, USE OF LANDS OR ACCESS BEYOND DESIGNATED AREAS TO BE APPROVED BY THE CONTRACTING OFFICER.
11. MAINTAIN PROTECTION MEASURES IN PLACE DURING CONSTRUCTION OPERATIONS. KEEP WHERE LANDSCAPE IMPROVEMENTS DO NOT REQUIRE THEIR REMOVAL IN ADVANCE OF SUBSTANTIAL COMPLETION.

DESIGNED: PV	SUB SHEET NO.	SECOND BANK BLOCK	DRAWING NO. 391-186675
CADD GM	L-5.1	IRRIGATION WORK SCOPE DIAGRAM	PMIS/PKG NO. 308228
TECH. REVIEW: POD		INDEPENDENCE NATIONAL HISTORICAL PARK	SHEET 34 OF 41
DATE: 2/26/25			

C:\Users\SYamanadala\OneDrive - mills + schnoering architects, llc\Documents\Independence Park Second Bank Block_saiy44SC8.rvt
9/14/2023 11:15:25 AM

GENERAL

1. These notes highlight but do not replace the specifications contained in the Project Manual.
2. The applicable building code is 2018 IBC as amended by the Philadelphia Building Code.
3. Refer to the Design Loads and Factors table on sheet S-0.0 for code required loads for the project.
4. Refer to the Special Inspections tables on sheet S-0.1 and the Special Inspections forms] for special inspection requirements for the project.
5. Contractor is solely responsible for means and methods and protecting adjacent structures during the course of the work. Do not damage or endanger the structural integrity of the Work or Existing Structure.
6. Contractor shall be responsible for the proper and safe design of shoring systems for trenches and excavations.
7. Notify Contracting Officer's Representative in case of discrepancies between drawings, these notes, and Project Manual before proceeding with the work.
8. Use architectural drawings and drawings of other disciplines in conjunction with the structural drawings to properly perform the work.
9. If conditions disclosed during excavation and demolition reveal unforeseen conditions, promptly request direction from Contracting Officer's Representative before proceeding.
10. Contractor is responsible for coordinating between sub-contractors.
11. Do not scale drawings.
12. Field dimensions
    A. Verify all dimensions and accurately locate all existing columns, bearing walls, and other structural members before beginning work or preparing shop drawings.
13. Sections and details shown, while drawn for specific locations, are intended to establish the general types of details to be used throughout.
14. The Contracting Officer's Representative's review of a submittal shall not relieve the Contractor of their responsibility to follow the intent of the contract drawings.

DELEGATED DESIGN ITEMS

1. Employ or retain a licensed professional engineer in the project jurisdiction to design and detail the following performance specified structural components:
    A. Concrete mix design
    B. Shoring / Scaffolding
    C. Temporary excavation support
    D. Underpinning / Helical pile design
2. See individual material sections for additional requirements.

EXISTING BUILDING/STRUCTURE NOTES

1. Verify all existing dimensions and elevations before beginning work or preparing shop drawings
2. Utmost care shall be exercised at all times when working on existing structural members and masonry bearing walls to avoid impairing the carrying capacity of the existing structure.
    A. Should the Architect determine that the carrying capacity of the existing structure has been impaired by, or as a result of, the operations of the Contractor, or is otherwise not in conformance with the contract documents, appropriate remedial work shall be required.
    B. Any damage resulting from the operations of the Contractor shall be repaired as directed by the Owner's representative at no additional cost to the Owner.
3. Notify the Contracting Officer's Representative before cutting or removal of any part of the existing structure not indicated to be modified or demolished.
4. Burning or welding in the building is strictly prohibited.
5. Contractor shall coordinate locations and dimensions of all penetrations through existing masonry walls with mechanical/electrical/plumbing drawings and provide lintels or sleeves per structural details. The contractor shall provide an allowance in their bid/pricing for this work.
6. Contractor shall infill all abandoned mechanical/electrical/plumbing penetrations in existing masonry walls with new or salvaged masonry, to the satisfaction of the Architect. The masonry sub-contractor shall provide an allowance in their bid/pricing for this work.
7. Definitions:
    A. Remove: Detach items from existing construction and dispose of them off-site unless indicated to be salvaged or reinstalled.
    B. Remove and Salvage: Detach items from existing construction, in a manner to prevent damage, and deliver to Owner ready for reuse.
    C. Remove and Reinstall: Detach items from existing construction, in a manner to prevent damage, prepare for reuse, and reinstall where indicated.
    D. Remove and Replace: Detach items from existing construction and replace in kind.
    E. Existing to Remain: Leave existing items that are not to be removed and that are not otherwise indicated to be salvaged or reinstalled.
    F. Dismantle: To remove by disassembling or detaching an item from a surface, using gentle methods and equipment to prevent damage to the item and surfaces; disposing of items unless indicated to be salvaged or reinstalled.
8. Work shall be completed in a manner consistent with the Secretary of Interior's Standard's for Preservation, Restoration, and Reconstruction.

SITE PREPARATION

1. Locate and mark all underground utility lines before starting work and call all local jurisdictions having authority and PA One Call 1-800-242-1776.
2. Provide for the proper and safe design and installation of all sheeting and shoring excavation support systems. All sheeting and shoring systems shall be designed by a professional engineer engaged by the Contractor and registered in the state of the project. Submit signed and sealed shop drawings and calculations to the Contracting Officer's Representative for review.
3. Permanent or abandoned timber lagging must be preservative treated prior to use to prevent insect infestation.
4. Preliminary grading shall be such that surface water is diverted away from the excavation.

FOUNDATIONS

1. Foundations are designed for an assumed bearing pressure of 1,500 psf.
2. Geotechnical Design Criteria: There was no geotechnical investigation completed. All design criteria have been assumed. Contractor to have a civil engineer review the existing soil conditions during excavation and provide recommendations on the indicated design approach.
3. Bottom of all exterior foundations shall be a minimum of 3'-0" below finished grade.
4. Special Inspector shall inspect and report on adequacy of bearing material.
5. Footings should be cast on the same day in which excavation for them is completed. If placing of concrete is delayed, footing bottom shall be trimmed to firm material immediately before casting.
6. Place concrete in dry excavations only. Pending approval by the Owner, Contractor may elect to conduct further subsurface investigations at their own expense.
7. Where pipes pass under wall footings, excavation below bottom of footing shall be backfilled with concrete when the footing is poured.
8. Where trench bottoms are dug below adjacent footing bottoms on a slope steeper than one vertical to two horizontal, the trench shall be backfilled with lean concrete to the point where the stated slope crosses the trench.
9. Footings shall be formed unless otherwise permitted by the Contracting Officer's Representative.
10. Provide continuous keyway and dowels in top of wall footing supporting concrete walls.
11. Refer to specifications and architectural drawings for waterproofing details and procedures.
12. Backfilling:
    A. Before backfilling walls, grout and/or concrete shall have attained design strength, and all slabs and beams that are necessary for the stability of the walls shall be in place.
    B. Backfill shall be carried up evenly on both sides of wall to lower grade.
    C. Backfill shall be placed in maximum of 8" loose lift thickness and compacted to 95% of Standard Proctor in accordance with ASTM D698.
    D. Tests shall be performed for each lift at a rate of two tests per lift minimum and not less than one test per 100' of wall length.
13. Fill under slabs on grade shall be compacted to 95% of Standard Proctor density in accordance with ASTM D698.

REINFORCED CONCRETE

1. Concrete construction shall follow requirements of the project specifications and ACI 301 "Specifications for Structural Concrete".
2. Detail, fabricate and place reinforcing and bar supports in accordance with the provisions set forth by the American Concrete Institute and the CRSI "Manual of Standard Practice."
3. Provide shop drawings showing full information for reinforcing placement. Develop all member elevations and sections with pertinent elevations given, to clearly indicate the position of the reinforcement and construction joints, without reproducing sections, plans, or elevations from the design drawings.
4. Provide reinforcing steel conforming to ASTM A615, Grade 60.
5. Length of reinforcing bars, if shown, does not include hooks.
6. Welded wire fabric shall conform to ASTM A1064.
7. Concrete properties: See on sheet S-0.1.
8. Clear cover for cast-in-place concrete reinforcing: See schedule on sheet S-0.1.
9. Reinforcement not shown on sections and plans is the same as that shown in similar sections and at similar locations.
10. Use stirrup and tie bending radii for all #3 through #5 bars.
11. At wall intersections, provide corner bars equal in size and spacing to normal wall steel.
12. Slabs on Grade:
    A. Unless otherwise noted, slab on grade shall be reinforced with 6x6, W1.4 x W1.5 WWF, lapped 6" on all sides, set 2" below top of slab.
13. Contractor shall notify Contractor's inspection agency before placement of concrete to allow for inspection of reinforcing placement, clearance, stud quantities on steel beams, and to confirm debris has been removed from forms.
14. Refer to special inspections table for testing requirements.
15. For conduits and/or pipes through, provide a submittal detailing the number, size, spacing and layout of the proposed conduit and/or pipe runs as well as the material specifications for the conduit or pipe, and sleeve detail.

MASONRY

1. Masonry shall be constructed in accordance with TMS 602.
2. All concrete masonry units shall conform to ASTM C90. Provide two-cell units, unless noted otherwise on plans.
3. Compressive strength (f'm) of all concrete unit masonry assemblies shall be 2000 psi at 28 days.
4. Concrete Unit Masonry Strength: Compressive strength of concrete unit masonry (f'm) may be determined either by strength or individual units, grout strength, and mortar type in accordance with TMS 602 article 1.4.B.2.b or by prism test method in accordance with TMS 602 article 1.4.B.3. Submit data and test results to validate masonry system strength via one of the two referenced methods.
5. Use ASTM C270, Type S mortar below grade.
6. Use ASTM C270, Type N mortar above grade.
7. Use ASTM C270, Type N mortar for veneer.
8. Lay CMU in piers, columns, pedestals and partially-grouted walls with face shells and webs fully bedded in mortar. Align vertical cells to be grouted. Fully-grouted walls may be bedded with face shells only.
9. Grout for masonry shall conform to ASTM C476 with a minimum 2000 psi compressive strength at 28 days. Provide coarse grout unless dimensions of grout spaces and pour heights dictate fine grout according to TMS 602/ACI 530.1/ASCE 6.
10. See architectural drawings for other masonry requirements.
11. Coordinate control and expansion joints with architectural drawings and recommendations of the Brick Industry Association and the National Concrete Masonry Association.
12. Provide shop drawings showing full information for reinforcing steel placement.
    A. Reinforcing steel detailer shall adequately cross reference the structural drawings to the satisfaction of the Contracting Officer's Representative.
    B. Reinforcing steel detailer shall develop all wall elevations and sections with pertinent elevations given, to clearly indicate the position of the reinforcement and construction joints, without reproducing sections, plans, or elevations from the design drawings.

SHORING/SCAFFOLDING

1. The contractor shall submit shoring/scaffolding shop drawings and calculations, prepared and sealed by a professional engineer licensed in the state of the project, for the following
    A. Earthwork sheeting and shoring.
    B. Building/structure support shoring.
    C. Scaffolding.
2. Shoring and scaffolding shall comply with O.S.H.A. regulations.
3. The Contracting Officer's Representative will review shoring/scaffolding submittals only for loads transmitted to the building structure. Submittals shall clearly indicate the location and magnitude of all loads applied to the building or structure. The contractor is responsible for design and performance of the shoring/scaffold system.

STANDARD ABBREVIATIONS

ABV	Above
ADDL	Additional
ADH	Adhesive
ADJ	Adjacent, Adjustment
AESS	Architecturally Exposed Structural Steel
AFF	Above Finished Floor
AGG	Aggregate
ALT	Alternate
ANCH	Anchor
APRX	Approximate
AR	Anchor Rod
ARCH	Architect(ural)
BOT, B	Bottom
B/	Bottom of
B-B	Back-to-Back
BAL	Balance
BCE	Bot Chord Extension
BEL	Below
BF	Braced Frame
BLDG	Building
BLK(G)	Block(ing)
BM	Beam
BP	Base Plate
BR	Brace(ing)
BRDG	Bridging
BRG	Bearing
BRK	Brick
BRKT	Bracket
BS	Both Sides
BSMT	Basement
BT	Bent
BTWN	Between
BYD	Beyond
CANT	Cantilever
CAP.	Capacity
C-C	Center-to-Center
CE	Concrete Encased
CFMF	Cold-Formed Metal Framing
CHAM	Chamfer
CI	Cast Iron
CIP	Cast In Place
CJ	Control/Contraction Joint
CL	Centerline
CLG	Ceiling
CLR	Clear
CM	Construction Manager
CMU	Concrete Masonry Unit
COL	Column
COMB.	Combined
COMP	Composite
CONC	Concrete
COND	Condition
CONN	Connection
CONST	Construction
CONT	Continuous
CONTR	Contractor
COORD	Coordinate
COV	Cover
CP	Cap Plate
CSK	Countersunk
CTR	Center(ed)
CY	Cubic Yard
DBL	Double
DEMO, (D)	Demolition/Demolish
DEPR	Depress(ed)/Depression
DET(S)	Detail(s)
DEV	Develop/Development
DIA, ∅	Diameter

DIAG	Diagonal
DIM(S).	Dimension(s)
DIR	Direction
DK	Deck
DL	Dead Load
DN	Down
do.	Ditto
DP	Deep
DS	Drilled Shaft, Drag Strut
DWG(S)	Drawing(s)
DWL	Dowel
(E)	Existing
EA	Each
EE	Each End
EF	Each Face
EJ	Expansion Joint
EL	Elevation
ELEC	Electrical
ELEV	Elevator
EMBED	Embedment/Embedded
ENGR	Engineer
EOD	Edge Of Deck
EOS	Edge Of Slab
EQ	Equal
EQP	Equipment
ES	Each Side
EXCAV	Excavate/Excavation
EXP	Expansion
EXT	Exterior
EW	Each Way
F/	Face of
FAB	Fabricate
FDN	Foundation
FIN.	Finish(ed)
FL	Floor
FLG	Flange
FP	Fireproofing
FRMG	Framing
FRP	Fiber-Reinforced Polymer
FS	Far Side
FT	Feet
FTG	Footing
FUT	Future
GA	Gage
GALV	Galvanize(d)
GC	General Contractor
GR	Grade
GYP	Gypsum
HDR	Header
HEF	Horizontal Each Face
HGR	Hanger
HI.	High
HIF	Horizontal Inside Face
HK	Hook(ed)
HOF	Horizontal Outside Face
HORIZ	Horizontal
HP	High Point
HT	Height
H&V	Horizontal & Vertical
HVAC	Heating, Ventilating, & Air Conditioning
I.D.	Inside Diameter
I.F.	Inside Face
INFO	Information
INSTL	Install/Installation
INSUL	Insulation
INT	Interior
JST(S)	Joist(s)

JT	Joint
k	Kip (thousand pounds)
KB	Knee Brace
LB, #	Pound
LDGR	Ledger (board)
LEN	Length
LG	Long
LL	Live Load
LLBB	Long Legs Back to Back
LLH	Long-Leg Horizontal
LLV	Long-Leg Vertical
LOCN	Location
LONGIT	Longitudinal
LP	Low Point
LSH	Long Side Horizontal
LSL	Long-Slotted Hole, Laminated Strand Lumber
LSV	Long Side Vertical
LVL	Laminated Veneer Lumber
LW	Long Way
LWC	Light Weight Concrete
M	Moment
MAS	Masonry
MATL	Material
MAX	Maximum
MECH	Mechanical
MFR	Manufacturer
MIN	Minimum
MISC	Miscellaneous
MO	Masonry Opening
MONO	Monolithic
MTL	Metal
NIC	Not In Contract
NO.	Number
NOM	Nominal
NS	Near Side
NTS	Not To Scale
NWC	Normal Weight Concrete
OC	On Centers
OD	Outside Diameter
O.F.	Outside Face
O-O	Out-to-Out
OPG	Opening
OPP	Opposite
OSB	Oriented Strand Board
OSL	Outstanding Leg, Oriented Strand Lumber
OVS	Oversized-Hole
PAF	Powder Actuated Fastener
PC	Precast Concrete, Piece
PCF	Pounds per Cubic Foot
PED	Pedestal
PERP	Perpendicular
PREFAB	Prefabricate(d)
PL	Plate
PLF	Pounds per Lineal Foot
PLYWD	Plywood
PMF	Premolded Filler
PROJ	Project(ion)
PROV	Provide
PSF	Pounds per Square Foot
PSI	Pounds per Square Inch
PSL	Parallel Strand Lumber
PT	Preservative-Treated, Post-Tensioned
PVC	Polyvinyl Chloride
QTY	Quantity
R	Radius
RCMU	Reinforced Concrete Masonry Unit

RD	Roof Drain
RDK	Roof Deck
REF	Reference
REINF	Reinforce(d)/ Reinforcement
REQ(D)	Require(d)
RET	Retaining
REV	Revise(d)/Revision
RO	Rough Opening
RQMT(S)	Requirement(s)
RXN	Reaction
SC	Slip-Critical (connection)
SCHED	Schedule
SECT	Section
SEOR	Structural Engineer of Record
SF	Square Foot
SFRM	Spray-Applied Fire Resistant Material
SHRG	Shoring
SHTHG	Sheathing
SIM	Similar
SL	Slope(d)
SLBB	Short Legs Back to Back
SLV	Sleeve
SOD	Slab On Deck
SOG	Slab On Grade
SPA	Space(s)/Spacing
SPEC(S)	Specification(s)
SQ	Square
SS	Stainless Steel
SSL	Short-Slotted Hole
STD	Standard
STIFF	Stiffener
STIR.	Stirrup
STL	Steel
STRUC	Structural
SUPT	Support
SW	Short Way
SYM	Symmetrical
T	Top
T/	Top of
T&B	Top and Bottom
TC	Terra Cotta
TCE	Top Chord Extension
TEMP	Temporary, Temperature
T&G	Tongue and Groove
THD	Thread(ed)
THK	Thick(ness)
TLS	Tension Lap Splice
TRANS	Transverse
TYP	Typical
UNO	Unless Noted Otherwise
U-P	Underpinning
V	Shear
VAR	Varies
VB	Vapor Barrier
VEF	Vertical Each Face
VERT	Vertical
VIF	Vertical Inside Face, Verify In Field
VOF	Vertical Outside Face
VR	Vapor Retarder
w/	With
w/o	Without
WD	Wood
WI	Wrought Iron
WP	Work Point, Waterproofing
WT	Weight
WWF	Welded Wire Fabric
XS	Extra Strong
XXS	Double Extra Strong
±	Exist Dim or El (VIF)

STRUCTURAL DRAWINGS LIST

SHEET NUMBER	DRAWING TITLE	90% CD - COST ESTIMATE	100% CD - 12/6/24	!
S-0.0	GENERAL NOTES	●	●	
S-0.1	SPECIAL INSPECTIONS	●	●	
S-0.2	SPECIAL INSPECTIONS	●	●	
S-1.0	PLANS	●	●	
S-2.0	MORRIS BASE PARTIAL PLANS & SECTIONS	●	●	
S-2.1	PARTIAL PLANS & SECTIONS	●	●	
S-2.2	PARTIAL PLANS & SECTIONS	●	●	

DESIGNED: BDW
CADD: TED
TECH. REVIEW: BDW
DATE: 2/18/25

SUB SHEET NO. S-0.0

SECOND BANK BLOCK
GENERAL NOTES
INDEPENDENCE NATIONAL HISTORICAL PARK
100% CD COST ESTIMATE

DRAWING NO. 391-186675
PMIS/PKG NO. 308228
SHEET 35 OF 41

C:\Users\tdennis\Documents\KH_230051B_INDE BANK BLOCK_CENTRAL_STRUCT_R23_tdennisTZBY4.rvt
11/21/2024 12:43:54 PM

SPECIAL INSPECTIONS PROGRAM - SOILS

(IBC TABLE 1705.6)

VERIFICATION AND INSPECTION		CONTINUOUS	PERIODIC	2018 IBC REFERENCE SECTION	REFERENCE STANDARD	COMMENTS
VERIFY MATERIALS BELOW SHALLOW FOUNDATIONS ARE ADEQUATE TO ACHIEVE THE DESIGN BEARING CAPACITY			X	1705.6, 1803, 1806		OBTAIN APPROVED GEOTECH REPORT IF APPLICABLE
VERIFY EXCAVATIONS ARE EXTENDED TO PROPER DEPTH AND HAVE REACHED PROPER MATERIAL			X	1705.6, 1804, 1808, 1809, 1810		do.
CONTROLLED FILL	PERFORM CLASSIFICATION AND TESTING OF COMPACTED FILL MATERIALS		X	1705.6, 1803, 1804		do.
	VERIFY USE OF PROPER MATERIALS, DENSITIES AND LIFT THICKNESSES DURING PLACEMENT AND COMPACTION OF COMPACTED FILL	X		1705.6, 1804		do.
	PRIOR TO PLACEMENT OF COMPACTED FILL, OBSERVE SUBGRADE AND VERIFY THAT SITE HAS BEEN PREPARED PROPERLY		X	1705.6, 1804		do.

SPECIAL INSPECTIONS PROGRAM - HELICAL PILE FOUNDATIONS

(IBC SECTION 1705.9)

VERIFICATION AND INSPECTION	CONTINUOUS	PERIODIC	2018 IBC REFERENCE SECTION	REFERENCE STANDARD	COMMENTS
OBSERVE DRILLING OPERATIONS AND MAINTAIN COMPLETE AND ACCURATE RECORDS FOR EACH ELEMENT	X		1705.9		OBTAIN APPROVED GEOTECHNICAL REPORT IF APPLICABLE
VERIFY INSTALLATION EQUIPMENT USED, PILE DIMENSIONS, TIP ELEVATIONS, FINAL DEPTH, FINAL INSTALLATION TORQUE, AND OTHER INSTALLATION DATA AS INDICATED IN THE APPROVED CONSTRUCTION DOCUMENTS	X		1705.9		

SPECIAL INSPECTIONS PROGRAM - CONCRETE & PRECAST CONCRETE

(IBC TABLE 1705.3)

VERIFICATION AND INSPECTION		CONTINUOUS	PERIODIC	2018 IBC REFERENCE SECTION	REFERENCE STANDARD	COMMENTS
GENERAL	INSPECTION OF FABRICATORS		X	1704.2.5		SEE NOTE 2.
INSPECTION OF REINFORCING STEEL, INCLUDING PRESTRESSING TENDONS, & PLACEMENT			X	1705.3, 1908.4	ACI 318: Ch. 20, 25.2, 25.3, 26.6.1-3	
WELDING OF REINFORCING STEEL	VERIFICATION OF WELDABILITY OF REINFORCING STEEL OTHER THAN ASTM A706		X	1705.3	AWS D1.4 ACI 318: 26.6.4	
	INSPECT SINGLE, PASS FILLET WELDS 5/16" OR LESS		X	1705.3	AWS D1.4 ACI 318: 26.6.4	
	ALL OTHER WELDS	X		1705.3	AWS D1.4 ACI 318: 26.6.4	
INSPECTION OF ANCHORS CAST IN CONCRETE			X	1705.3	ACI 318: 17.8.2	
VERIFYING USE OF REQUIRED DESIGN MIX			X	1705.3,1904.1,1904.2,1908.2,1908.3	ACI 318: Ch. 19, 26.4.3, 26.4.4	
PRIOR TO CONCRETE PLACEMENT, FABRICATE SPECIMENS FOR STRENGTH TESTS, PERFORM SLUMP AND AIR CONTENT TESTS, AND DETERMINE THE TEMPERATURE OF THE CONCRETE		X		1705.3, 1908.10	ASTM C 172 ASTM C 31 ACI 318: 26.5.2, 26.12	
INSPECTION OF CONCRETE & SHOTCRETE PLACEMENT FOR PROPER APPLICATION TECHNIQUES		X		1705.3,1908.6, 1908.7,1908.8	ACI 318: 26.5	
VERIFYING MAINTENANCE OF SPECIFIED CURING TEMPERATURE & TECHNIQUES			X	1705.3, 1908.9	ACI 318: 26.5.3-5.5	
PRESTRESSED CONCRETE	APPLICATION OF PRESTRESSING FORCES	X		1705.3	ACI 318: 26.10	
	GROUTING OF BONDED PRESTRESSING TENDONS	X		1705.3	ACI 318: 26.10	
ERECTION OF PRECAST CONCRETE MEMBERS			X	1705.3	ACI 318: 26.9	
VERIFICATION OF IN-SITU CONCRETE STRENGTH, PRIOR TO STRESSING OF TENDONS IN POST-TENSIONED CONCRETE & PRIOR TO REMOVAL OF SHORES & FORMS FROM BEAMS & STRUCTURAL SLABS			X	1705.3	ACI 318: 26.11.2	
INSPECT FORMWORK FOR SHAPE, LOCATION & DIMENSIONS OF THE CONCRETE MEMBER BEING FORMED			X	1705.3	ACI 318: 26.11.2	

NOTE: CONTRACTOR SHALL ENGAGE THE INDEPENDENT SPECIAL INSPECTION AGENCY. CONTRACTOR TO NOTIFY INSPECTOR OF PROGRESS OF CONSTRUCTION AND PROVIDE ACCESS TO THE SITE TO COMPLETE INSPECTIONS.

STRUCTURAL TESTING & INSPECTION PROGRAM NOTES:

1. THE INTENTION OF THIS TABLE IS TO IDENTIFY THE CONSTRUCTION REQUIRING SPECIAL INSPECTION AS REQUIRED BY THE INTERNATIONAL BUILDING CODE (IBC). CONTRACTOR SHALL ENGAGE INDEPENDENT SPECIAL INSPECTION AGENCY. CONTRACTOR TO NOTIFY SPECIAL INSPECTOR OF PROGRESS OF CONSTRUCTION AND PROVIDE ACCESS TO THE SITE TO COMPLETE INSPECTIONS. EACH SPECIAL INSPECTOR IS RESPONSIBLE FOR JOB SPECIFIC ITEMS AS DEFINED IN CHAPTER 17 OF THE IBC (AND IN ACCORDANCE WITH THE SPECIFICATION)
2. INSPECTIONS OF FABRICATORS IS NOT REQUIRED IF THE FABRICATOR IS APPROVED IN ACCORDANCE TO IBC SECTION 1704.2.5 AND CERTIFIES COMPLIANCE WITH THE APPROVED CONSTRUCTION DOCUMENTS.
3. THE ITEMS CHECKED WITH AN "X" SHALL BE INSPECTED IN ACCORDANCE WITH IBC CHAPTER 17 BY A CERTIFIED SPECIAL INSPECTOR FROM AN ESTABLISHED TESTING AGENCY. FOR MATERIAL SAMPLING AND TESTING REQUIREMENTS, REFER TO THE MATERIAL SAMPLING AND TESTING SECTION OF THE PROJECT SPECIFICATIONS AND THE GENERAL NOTES. THE TESTING AGENCY SHALL SEND COPIES OF ALL STRUCTURAL TESTING AND INSPECTION REPORTS DIRECTLY TO THE ENGINEER, CONTRACTOR AND BUILDING OFFICIAL. ANY CONSTRUCTION WHICH FAILS TO MEET THE PROJECT SPECIFICATIONS AND IBC REQUIREMENTS SHALL BE IMMEDIATELY BROUGHT TO THE ATTENTION OF THE CONTRACTOR FOR CORRECTION AND THE ENGINEER IF UNCORRECTED. SPECIAL INSPECTION TESTING REQUIREMENTS APPLY EQUALLY TO ALL BIDDER DESIGNED COMPONENTS.
4. FREQUENCY OF INSPECTIONS.
   A. CONTINUOUS SPECIAL INSPECTION MEANS THAT THE SPECIAL INSPECTOR SHALL BE ON SITE AT ALL TIMES OBSERVING THE WORK REQUIRING SPECIAL INSPECTION. FOR STRUCTURAL STEEL, INSPECTION TASK MUST BE COMPLETED FOR EACH MEMBER OR CONNECTION.
   B. PERIODIC SPECIAL INSPECTION MEANS THAT THE SPECIAL INSPECTOR IN ON THE SITE AT THE TIME INTERVALS NECESSARY TO CONFIRM THAT ALL WORK REQUIRING SPECIAL INSPECTIONS IS IN COMPLIANCE. OPERATIONS NEED NOT BE DELAYED PENDING THESE INSPECTIONS.
5. STRUCTURAL STEEL SPECIAL INSPECTIONS:
   A. QUALITY CONTROL (QC) SHALL BE PROVIDED BY THE FABRICATOR AND ERECTOR. QUALITY ASSURANCE (QA) SHALL BE PROVIDED BY THE TESTING AGENCY.
   B. "O" INDICATES OBSERVATIONS TO BE PERFORMED ON A RANDOM BASIS. "P" INDICATES TASKS TO BE PERFORMED FOR EACH WELDED JOINT OR MEMBER.
6. ALL WELDS SHALL BE VISUALLY INSPECTED BY AN AWS CERTIFIED WELDING INSPECTOR. ALL PROVISIONS OF AWS D1.1/D1.1M "STRUCTURAL WELDING CODE-STEEL" SHALL APPLY TO STEEL CONSTRUCTION. NON-DESTRUCTIVE TESTING OF WELD JOINTS SHALL BE IN ACCORDANCE WITH AISC 360 SECTION N5.

CAST-IN-PLACE CONCRETE PROPERTIES SCHEDULE

TYPE	28 DAY COMPRESSIVE STRENGTH	MAX W/C[2] RATIO	AIR CONTENT[1] (±1.5%)	NOMINAL MAXIMUM COARSE AGGREGATE (ASTM C33 GRADING)	EXPOSURE CATEGORY & CLASS (F / S / W / C)
FOUNDATIONS	3,500	0.55	4.5%	1 1/2"	F1 / S0 / W0 / C1
FOUNDATION WALLS	4,000	0.55	4.5%	1"	F1 / S0 / W0 / C1
SIDEWALKS & SITE SLABS	5,000	0.40	6%	3/4"	F3 / S0 / W1 / C2
SITE WALLS & RETAINING WALLS	4,500	0.45	6%	1"	F2 / S0 / W1 / C1
UNDERPINNING	3,500	0.55	4.5%	1"	F1 / S0 / W0 / C1

NOTES:
1. AIR-ENTRAIN CONCRETE WHERE PERCENTAGES ARE INDICATED. DO NOT ALLOW AIR CONTENT OF TROWELED FINISHED FLOORS TO EXCEED 3%.
2. W/C INDICATES WATER TO CEMENTITIOUS MATERIALS RATIO.
3. INTERIOR INDICATES CONCRETE PLACED INSIDE THE BUILDING WATERPROOFING ENVELOPE.

CAST IN PLACE CONCRETE CLEAR COVER FOR REINFORCEMENT

EXPOSURE	MEMBER	REINFORCEMENT	CLEAR COVER (IN)
CAST AGAINST AND PERMANENTLY IN CONTACT WITH GROUND	ALL	ALL	3
EXPOSED TO WEATHER OR IN CONTACT WITH GROUND (NOT CAST AGAINST)	ALL	#6 BARS & LARGER	2
		#5 BARS & SMALLER	1 1/2
NOT EXPOSED TO WEATHER OR IN CONTACT WITH GROUND (INTERIOR)	SLABS	#11 BARS & SMALLER	3/4
	BEAMS, COLUMNS, WALLS, PIERS, & PILASTERS	ALL	1 1/2

NOTES:
1. COVER IS MEASURED FROM THE OUTERMOST FACE OF THE CONCRETE SURFACE TO THE OUTERMOST SURFACE OF THE REINFORCEMENT. COVER SHALL BE MEASURED TO THE OUTERMOST SURFACE OF THE STIRRUPS OR TIES WHERE PROVIDED.
2. WALLS BELOW GRADE SHALL BE ASSUMED TO BE EXPOSED TO WEATHER OR IN CONTACT WITH GROUND, EVEN IF WATERPROOFED.

11/21/2024 12:43:54 PM C:\Users\tdennis\Documents\KH_230051B_INDE BANK BLOCK_CENTRAL_STRUCT_R23_tdennisTZBY4.rvt

REINFORCEMENT DEVELOPMENT & LAP SPLICE LENGTHS (TENSION ONLY)

NOTES:

1. LENGTHS GIVEN IN SCHEDULE ARE BASED ON GRADE 60, UNCOATED REINFORCEMENT IN NORMAL WEIGHT CONCRETE. INCREASE LENGTHS BY THE FACTORS LISTED BELOW BASED ON THE ACTUAL CONDITIONS. EACH FACTOR SHALL BE APPLIED WHERE MULTIPLE CONDITIONS OCCUR.
   - LIGHTWEIGHT CONCRETE = 1.3
   - EPOXY COATED REINF w/ CLEAR COVER LESS THAN 3xBAR DIA OR CLEAR SPACING LESS THAN 6xBAR DIA = 1.5
   - ALL OTHER EPOXY COATED REINF = 1.2
2. LENGTHS GIVEN IN SCHEDULES ARE BASED ON EITHER:
   - BEAMS & COLUMNS - CLEAR SPACING OF REINF NOT LESS THAN BAR DIA & CLEAR COVER OF AT LEAST BAR DIA
   - SLABS & WALLS - CLEAR SPACING OF REINF NOT LESS THAN 2xBAR DIA & CLEAR COVER NOT LESS THAN BAR DIA.

   INCREASE LENGTHS BY A FACTOR OF 1.5 IF THESE SPACING REQUIREMENTS ARE NOT MET.
3. CONCRETE STRENGTH INDICATED IS 28 DAY COMPRESSIVE STRENGTH.
4. CLASS A TENSION LAP SPLICE LENGTHS SHALL BE TAKEN AS THE DEVELOPMENT LENGTH. ONLY USE WHERE PERMITTED ON DRAWINGS.
5. LAP SPLICES SHALL BE MADE USING CONTACT OR NON-CONTACT LAP SPLICES IN ACCORDANCE WITH ACI. MECHANICAL SPLICE COUPLERS MAY BE USED IN LIEU OF LAP SPLICES AT CONTRACTOR OPTION.
6. WHEN BARS OF DIFFERENT SIZES ARE SPLICED, THE SPLICE LENGTH SHALL BE THE LARGER OF EITHER THE DEVELOPMENT LENGTH OF THE LARGER BAR OR THE LAP SPLICE LENGTH OF THE SMALLER BAR.
7. A FACTOR OF 0.7 CAN BE APPLIED TO THE SCHEDULED DEVELOPMENT LENGTHS FOR HOOKED REINFORCEMENT WITH CLEAR COVER GREATER THAN 2 1/2".
8. A "TOP BAR" IS DEFINED AS A HORIZONTAL BAR WITH MORE THAN 12" OF FRESH CONCRETE PLACED BELOW THE BAR. ALL OTHER CONDITIONS SHALL BE CONSIDERED "OTHER BARS."
9. SCHEDULES APPLY TO REINFORCEMENT PLACED IN CONCRETE ONLY. REFER TO THE CMU DEVELOPMENT AND LAP SPLICE LENGTH TABLE FOR REINF PLACED IN CMU.

STRAIGHT BARS IN TENSION

BAR SIZE	CONDITION	CONCRETE STRENGTH (psi)									
		3000		3500		4000		4500		5000	
		TOP BARS	OTHER BARS	TOP BARS	OTHER BARS	TOP BARS	OTHER BARS	TOP BARS	OTHER BARS	TOP BARS	OTHER BARS
#3	DEV. LENGTH	1'-10"	1'-5"	1'-8"	1'-4"	1'-7"	1'-3"	1'-6"	1'-2"	1'-5"	1'-1"
	CLASS B SPLICE	2'-4"	1'-10"	2'-2"	1'-8"	2'-1"	1'-7"	1'-11"	1'-6"	1'-10"	1'-5"
#4	DEV. LENGTH	2'-5"	1'-10"	2'-3"	1'-9"	2'-1"	1'-7"	2'-0"	1'-6"	1'-11"	1'-5"
	CLASS B SPLICE	3'-2"	2'-5"	2'-11"	2'-3"	2'-9"	2'-1"	2'-7"	2'-0"	2'-5"	1'-11"
#5	DEV. LENGTH	3'-0"	2'-4"	2'-9"	2'-2"	2'-7"	2'-0"	2'-6"	1'-11"	2'-4"	1'-10"
	CLASS B SPLICE	3'-11"	3'-0"	3'-7"	2'-9"	3'-5"	2'-7"	3'-2"	2'-6"	3'-0"	2'-4"
#6	DEV. LENGTH	3'-7"	2'-9"	3'-4"	2'-7"	3'-1"	2'-5"	2'-11"	2'-3"	2'-10"	2'-2"
	CLASS B SPLICE	4'-8"	3'-7"	4'-4"	3'-4"	4'-1"	3'-1"	3'-10"	2'-11"	3'-8"	2'-10"
#7	DEV. LENGTH	5'-3"	4'-0"	4'-10"	3'-9"	4'-6"	3'-6"	4'-3"	3'-4"	4'-1"	3'-2"
	CLASS B SPLICE	6'-9"	5'-3"	6'-3"	4'-10"	5'-11"	4'-6"	5'-7"	4'-3"	5'-3"	4'-1"
#8	DEV. LENGTH	6'-0"	4'-7"	5'-6"	4'-3"	5'-2"	4'-0"	4'-11"	3'-9"	4'-8"	3'-7"
	CLASS B SPLICE	7'-9"	6'-0"	7'-2"	5'-6"	6'-9"	5'-2"	6'-4"	4'-11"	6'-0"	4'-8"
#9	DEV. LENGTH	6'-9"	5'-2"	6'-3"	4'-10"	5'-10"	4'-6"	5'-6"	4'-3"	5'-3"	4'-0"
	CLASS B SPLICE	8'-9"	6'-9"	8'-1"	6'-3"	7'-7"	5'-10"	7'-2"	5'-6"	6'-9"	5'-3"
#10	DEV. LENGTH	7'-7"	5'-10"	7'-0"	5'-5"	6'-7"	5'-1"	6'-2"	4'-9"	5'-11"	4'-6"
	CLASS B SPLICE	9'-10"	7'-7"	9'-1"	7'-0"	8'-6"	6'-7"	8'-0"	6'-2"	7'-8"	5'-11"
#11	DEV. LENGTH	8'-5"	6'-5"	7'-9"	6'-0"	7'-3"	5'-7"	6'-10"	5'-4"	6'-6"	5'-0"
	CLASS B SPLICE	10'-11"	8'-5"	10'-1"	7'-9"	9'-6"	7'-3"	8'-11"	6'-10"	8'-6"	6'-6"

DEVELOPMENT LENGTH OF STANDARD HOOK IN TENSION

BAR SIZE	CONCRETE STRENGTH (psi)				
	3000	3500	4000	4500	5000
#3	0'-9"	0'-8"	0'-8"	0'-7"	0'-7"
#4	0'-11"	0'-11"	0'-10"	0'-9"	0'-9"
#5	1'-2"	1'-1"	1'-0"	1'-0"	0'-11"
#6	1'-5"	1'-4"	1'-3"	1'-2"	1'-1"
#7	1'-8"	1'-6"	1'-5"	1'-4"	1'-3"
#8	1'-10"	1'-9"	1'-7"	1'-6"	1'-5"
#9	2'-1"	1'-11"	1'-10"	1'-9"	1'-8"
#10	2'-4"	2'-2"	2'-1"	1'-11"	1'-10"
#11	2'-7"	2'-5"	2'-3"	2'-2"	2'-0"

DEVELOPMENT LENGTH OF HEADED BAR IN TENSION

BAR SIZE	CONCRETE STRENGTH (psi)				
	3000	3500	4000	4500	5000
#3	0'-7"	0'-7"	0'-6"	0'-6"	0'-6"
#4	0'-9"	0'-9"	0'-8"	0'-8"	0'-7"
#5	0'-11"	0'-11"	0'-10"	0'-9"	0'-9"
#6	1'-2"	1'-1"	1'-0"	0'-11"	0'-11"
#7	1'-4"	1'-3"	1'-2"	1'-1"	1'-0"
#8	1'-6"	1'-5"	1'-4"	1'-3"	1'-2"
#9	1'-8"	1'-7"	1'-6"	1'-5"	1'-4"
#10	1'-11"	1'-9"	1'-8"	1'-7"	1'-6"
#11	2'-1"	1'-11"	1'-10"	1'-9"	1'-8"

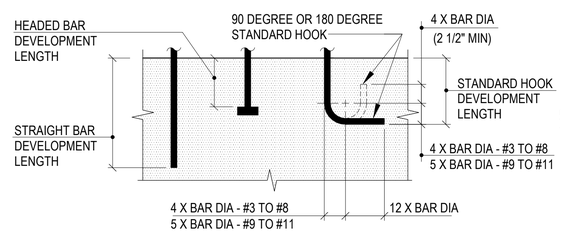

DEVELOPMENT LENGTH

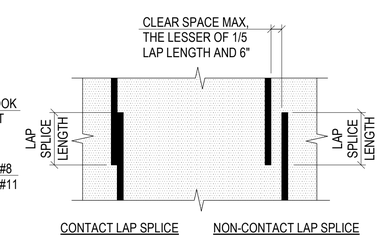

LAP SPLICES

DESIGNED: BDW	SUB SHEET NO.	SECOND BANK BLOCK	DRAWING NO. 391–186675
DRAWN: TED	S-0.2	SPECIAL INSPECTIONS	PMIS/PKG NO. 308228
TECH. REVIEW: BDW		INDEPENDENCE NATIONAL HISTORICAL PARK	SHEET 37 OF 41
DATE: 2/18/25		100% CD COST ESTIMATE	

C:\Users\tdennis\Documents\KH_230051B_INDE BANK BLOCK_CENTRAL_STRUCT_R23_tdennisTZBY4.rvt
11/21/2024 12:43:56 PM

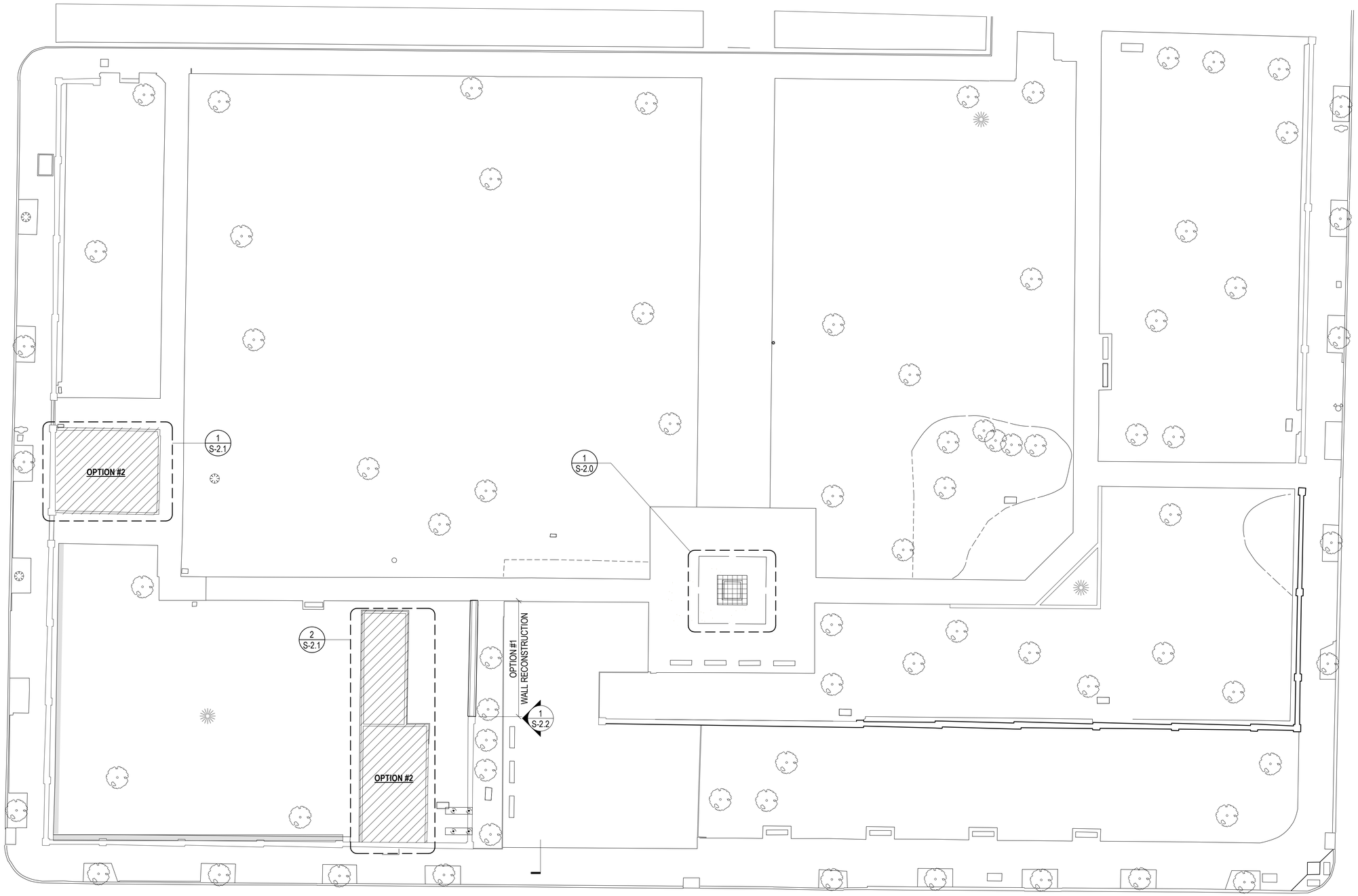

1 S-1.0 PLAN
SCALE (A)

SCALE (A) 20 0 20 40
SCALE OF FEET

NOTE:
1. REFER TO ARCHITECTURAL DRAWINGS FOR OPTION AND ALTERNATIVE INFORMATION.

NOTE:
UNLESS OTHERWISE NOTED AS AN OPTION, ALL WORK IS PART OF THE BASE SCOPE.

PROJECT NORTH

DESIGNED: BDW	SUB SHEET NO.	SECOND BANK BLOCK PLANS	DRAWING NO. 391–186675
DADD TED	S-1.0	INDEPENDENCE NATIONAL HISTORICAL PARK	PMIS/PKG NO. 308228
TECH. REVIEW: BDW		100% CD COST ESTIMATE	SHEET 38 OF 41
DATE: 2/18/25			

C:\Users\tdennis\Documents\KH_230051B_INDE BANK BLOCK_CENTRAL_STRUCT_R23_tdennisTZBY4.rvt

11/21/2024 12:43:56 PM

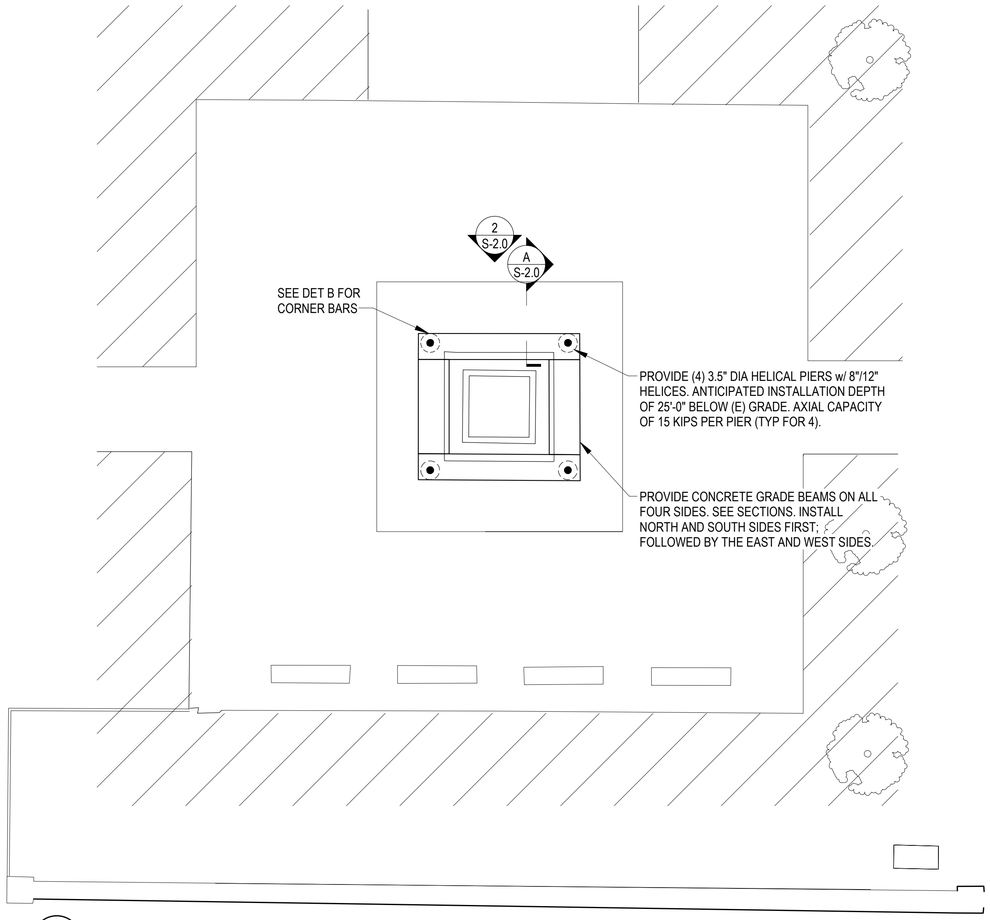

1 S-2.0 PARTIAL PLAN
SCALE A

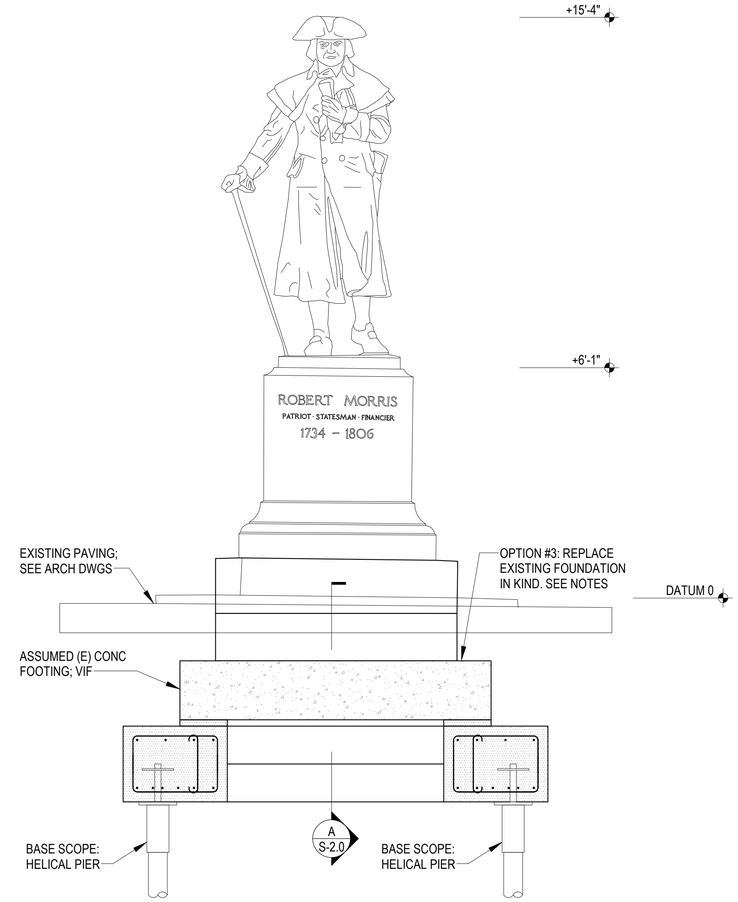

2 S-2.0 NORTH ELEVATION
SCALE B

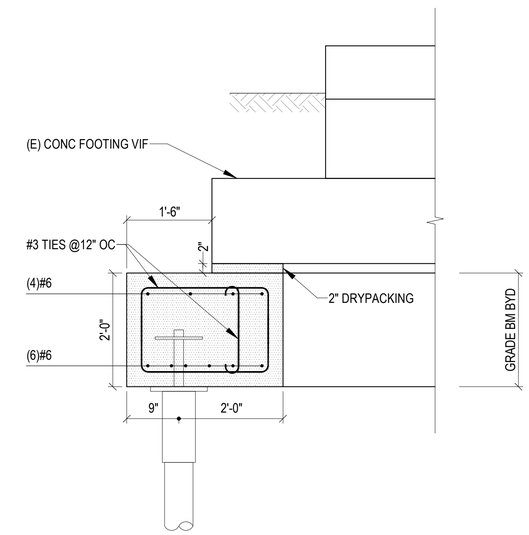

A S-2.0 SECTION
SCALE C

NOTES:
OPTION #3: REPLACE EXISTING STATUE FOUNDATION IN KIND.
A. PROVIDE 18" THICK CONCRETE FOUNDATION; BOTTOM OF FTG TO BE 3'-0" BELOW ADJACENT GRADE.
B. PROVIDE #6 SPACED AT 12" ON-CENTER AT TOP AND BOTTOM OF FOOTING EACH DIRECTION.

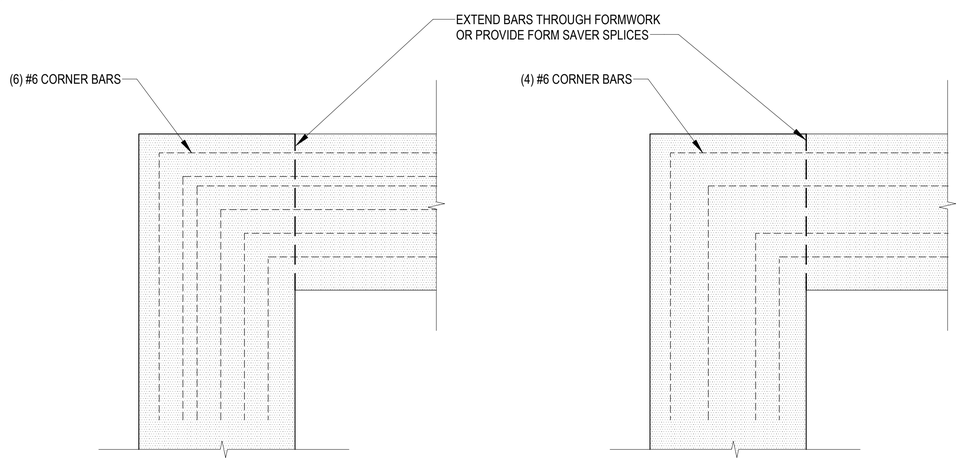

3 S-2.0 PARTIAL PLAN - CORNER BARS (NW CORNER SHOWN)
SCALE C

NOTE:
1. REFER TO ARCHITECTURAL DRAWINGS FOR OPTION AND ALTERNATIVE INFORMATION.
2. "HELICAL STITCH ANCHOR" REFERS TO A HELICAL STAINLESS STEEL REINFORCING BAR FOR MASONRY REPAIRS.

SCALE C: 1 0 1 2 3 — SCALE OF FEET
SCALE B: 2 0 2 4 — SCALE OF FEET
SCALE A: 8 0 8 16 — SCALE OF FEET

NOTE:
UNLESS OTHERWISE NOTED AS AN OPTION, ALL WORK IS PART OF THE BASE SCOPE.

PROJECT NORTH

DESIGNED: BDW	SUB SHEET NO.	SECOND BANK BLOCK MORRIS BASE PARTIAL PLANS & SECTIONS INDEPENDENCE NATIONAL HISTORICAL PARK	DRAWING NO. 391–186675
CADD TED	S-2.0		PMIS/PKG NO. 308228
TECH. REVIEW: BDW			SHEET 39 OF 41
DATE: 2/18/25		100% CD COST ESTIMATE	

C:\Users\tdennis\Documents\KH_230051B_INDE BANK BLOCK_CENTRAL_STRUCT_R23_tdennisTZBY4.rvt
11/21/2024 12:43:57 PM

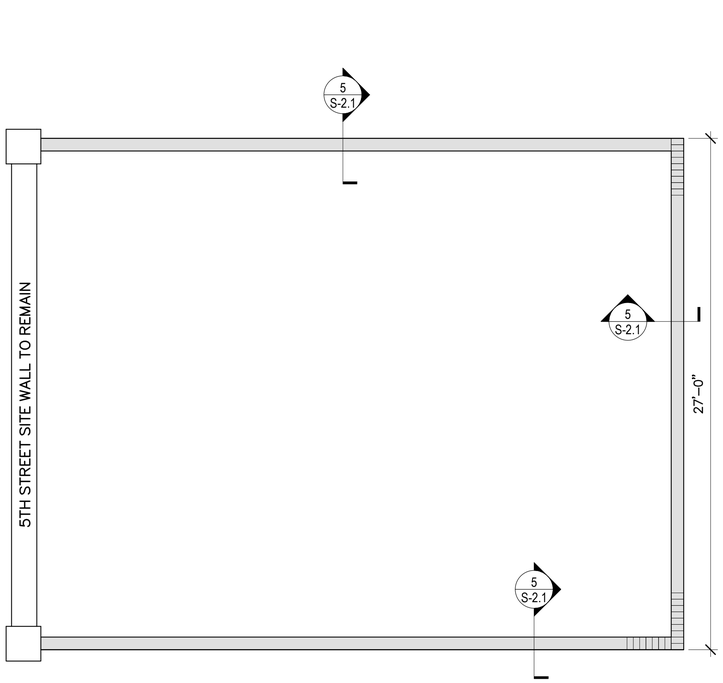

1 S-2.1 INTERPRETIVE FOUNDATION - 5TH STREET
SCALE A

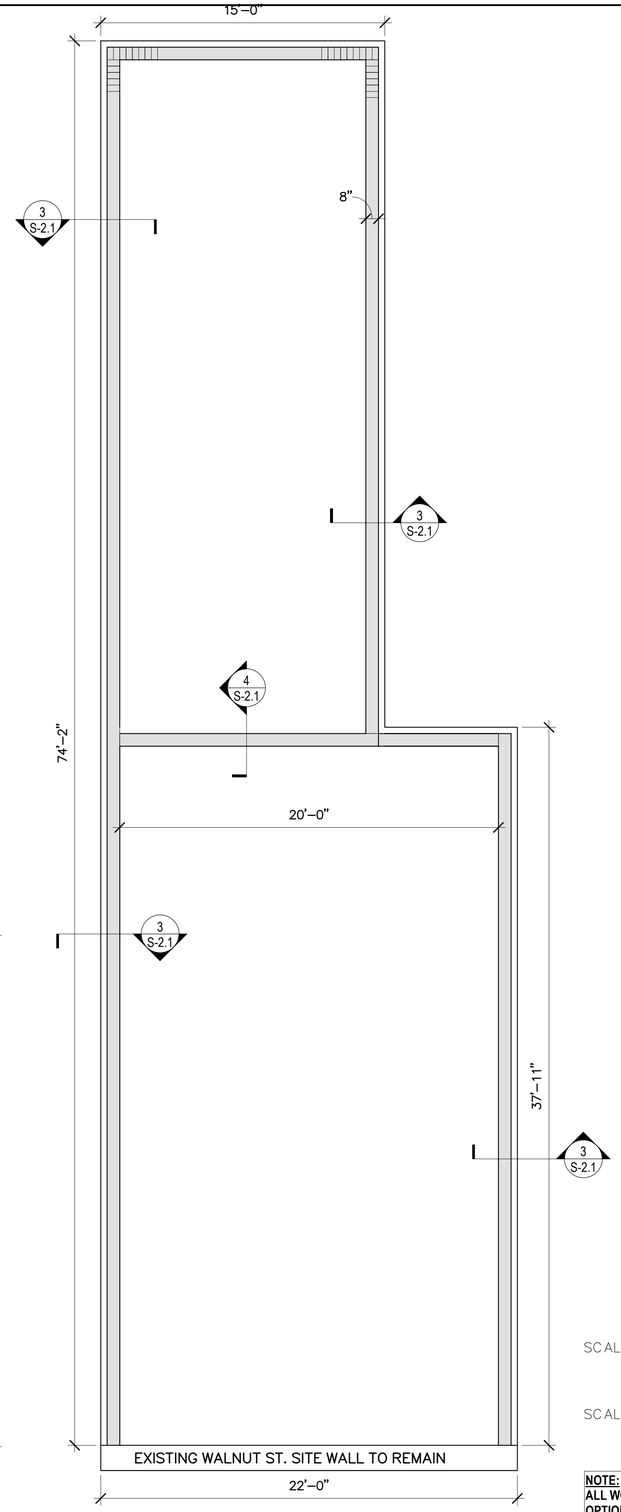

2 S-2.1 INTERPRETIVE FOUNDATION - WALNUT STREET
SCALE A

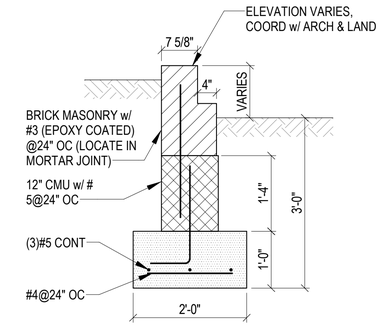

3 S-2.1 SECTION
SCALE B

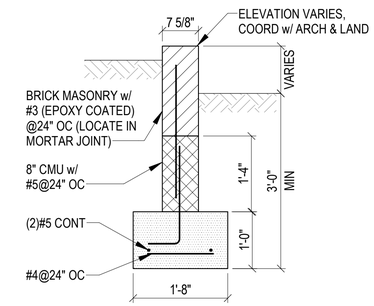

4 S-2.1 SECTION
SCALE B

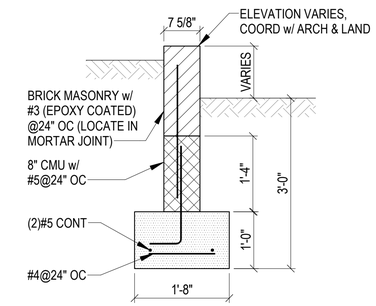

5 S-2.1 SECTION
SCALE B

SCALE B 1 0 1 2 3
SCALE OF FEET

SCALE A 4 0 4 8
SCALE OF FEET

NOTE:
ALL WORK ON THIS SHEET IS OPTION #2.

PROJECT NORTH

NOTE:
1. REFER TO ARCHITECTURAL DRAWINGS FOR OPTION AND ALTERNATIVE INFORMATION.
2. "HELICAL STITCH ANCHOR" REFERS TO A HELICAL STAINLESS STEEL REINFORCING BAR FOR MASONRY REPAIRS.

DESIGNED: BDW CADD TED TECH. REVIEW: BDW DATE: 2/18/25	SUB SHEET NO. S-2.1	SECOND BANK BLOCK PARTIAL PLANS & SECTIONS INDEPENDENCE NATIONAL HISTORICAL PARK 100% CD COST ESTIMATE	DRAWING NO. 391–186675 PMIS/PKG NO. 308228 SHEET 40 OF 41

C:\Users\tdennis\Documents\KH_230051B_INDE BANK BLOCK_CENTRAL_STRUCT_R23_tdennisTZBY4.rvt
11/21/2024 12:43:58 PM

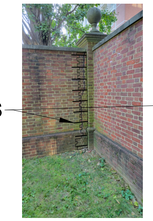

STITCH ANCHORS

WEST SIDE OF WALL

SUGGESTED INSTALLATION PROCEDURE:

1. EXCAVATE AND INSTALL A SINGLE PAIR OF PILES/GRADE BEAM.
2. ONCE FIRST SET IS COMPLETE, MOVE ON TO SECOND PAIR. (THIS LIMITS THE AMOUNT OF OPEN EXCAVATION AT ANY ONE TIME).

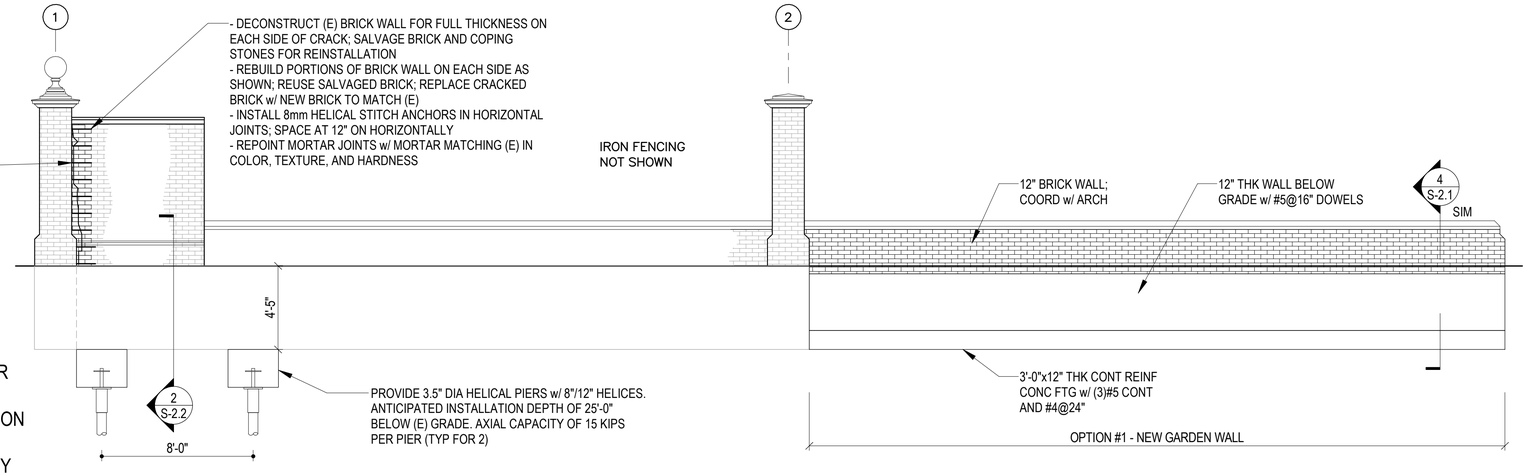

1 S-2.2 ELEVATION SCALE B

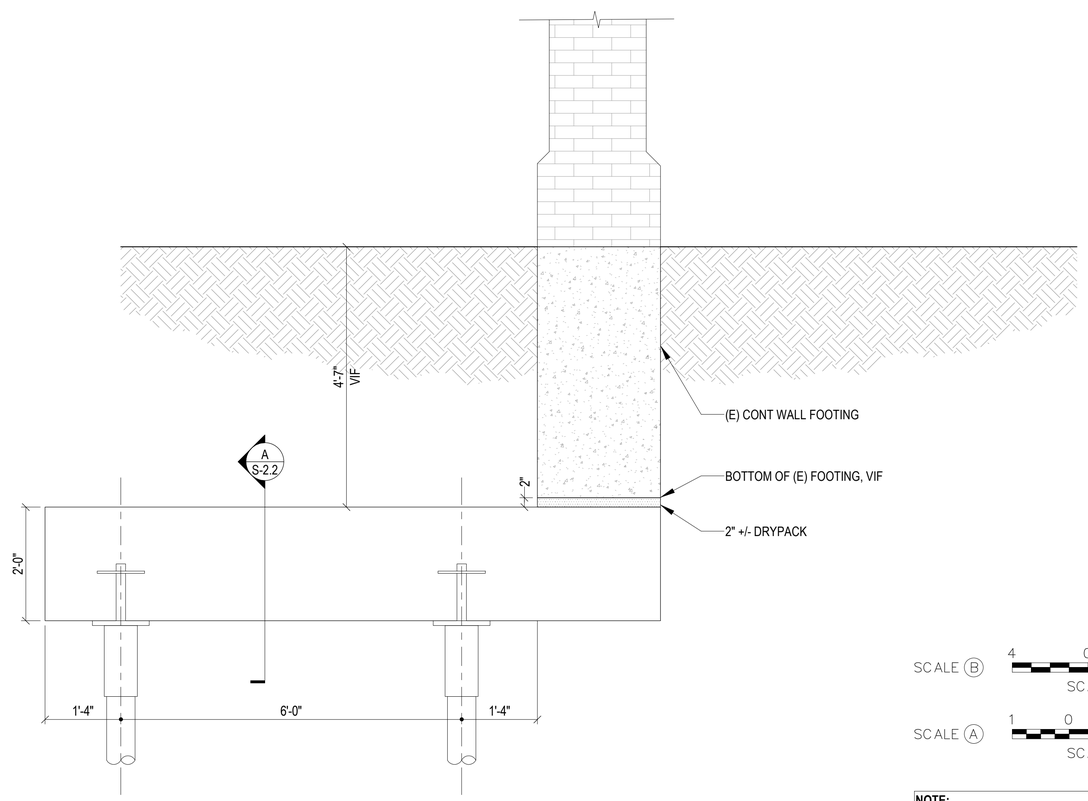

2 S-2.2 SECTION SCALE A

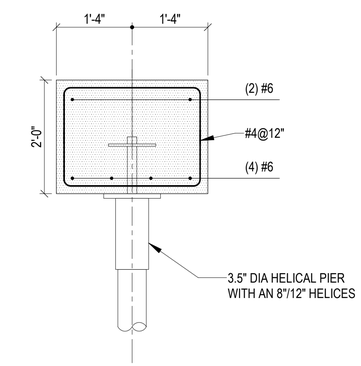

A S-2.2 SECTION SCALE A

SCALE B: 4 0 4 8 — SCALE OF FEET

SCALE A: 1 0 1 2 3 — SCALE OF FEET

NOTE:
1. REFER TO ARCHITECTURAL DRAWINGS FOR OPTION AND ALTERNATIVE INFORMATION.
2. "HELICAL STITCH ANCHOR" REFERS TO A HELICAL STAINLESS STEEL REINFORCING BAR FOR MASONRY REPAIRS.

NOTE:
UNLESS OTHERWISE NOTED AS AN OPTION, ALL WORK IS PART OF THE BASE SCOPE.

PROJECT NORTH

DESIGNED: BDW	SUB SHEET NO.	SECOND BANK BLOCK	DRAWING NO.
CADD TED	S-2.2	PARTIAL PLANS & SECTIONS	391-186675
TECH. REVIEW: BDW		INDEPENDENCE NATIONAL HISTORICAL PARK	PMIS/PKG NO. 308228
DATE: 2/18/25		100% CD COST ESTIMATE	SHEET 41 OF 41

C:\Users\tdennis\Documents\KH_230051B_INDE BANK BLOCK_CENTRAL_STRUCT_R23_tdennisTZBY4.rvt
11/21/2024 12:43:58 PM