US Army Corps
of Engineers ®
NEW YORK DISTRICT

CHILD DEVELOPMENT CENTER
USAG FORT HAMILTON, NEW YORK

PROJECT NO. 75662

SOLICITATION NO.: W912DS23F0031
CONTRACT NO.: W912DS19D0007
ISSUE DATE: AUGUST 29, 2025
VOLUME: 1 OF 1

VICINITY MAP

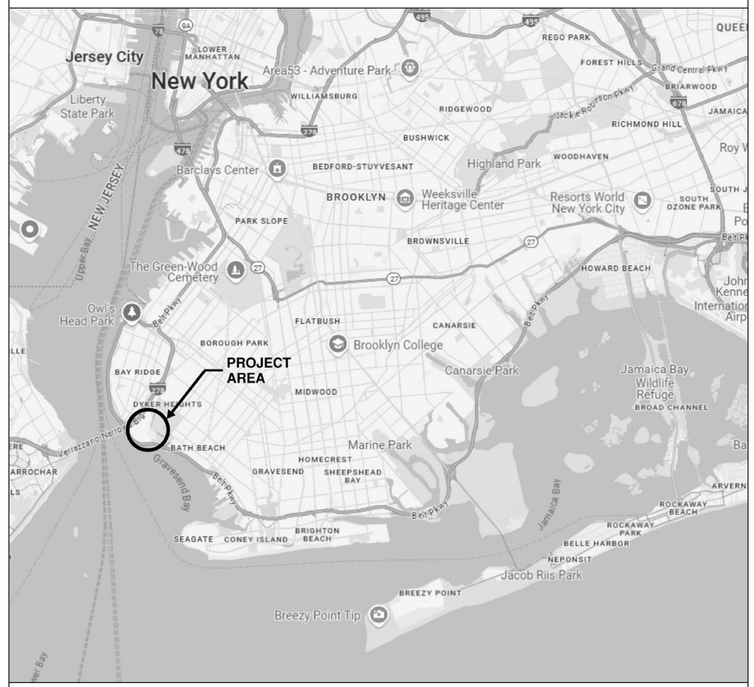

LOCATION MAP

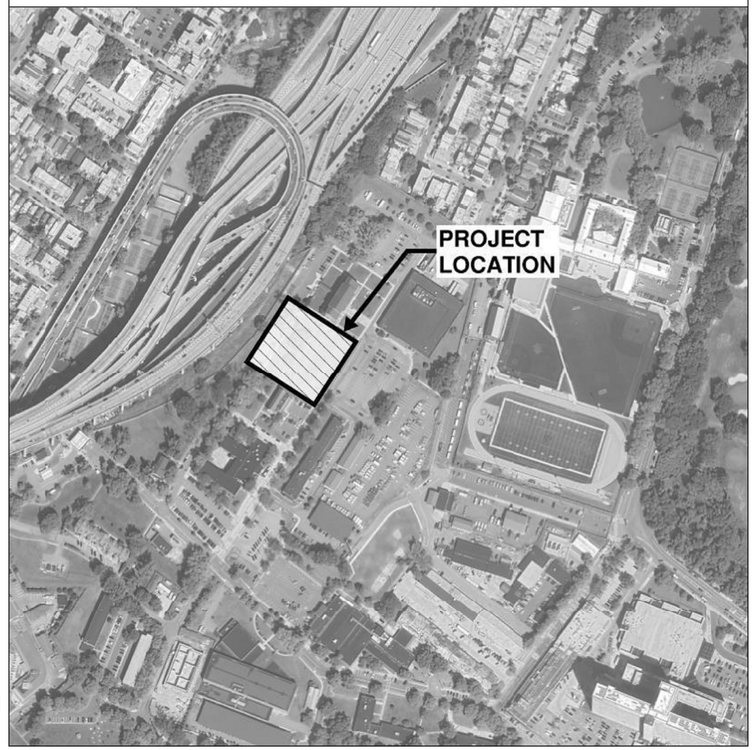

PLAN NORTH

R.T.A

US Army Corps of Engineers ®

MARK	DESCRIPTION	DATE

PLOT DATE: 9/30/2025 12:41:51 AM FILE LOCATION: R:\dms29778\FH-CDC-DMM-A.rvt

ISSUE DATE: AUGUST 29, 2025
SOLICITATION NO.: W912DS23F0031
CONTRACT NO.: W912DS19D0007

DESIGNED BY: JKIM
DRAWN BY: JKIM
CHECKED BY: CHANG
SUBMITTED BY:
SIZE: ANSI D

US ARMY CORPS OF ENGINEERS
NEW YORK DISTRICT
26 FEDERAL PLAZA, NEW YORK, NY 10278

CHILD DEVELOPMENT CENTER
USAG FORT HAMILTON, NEW YORK
PROJECT NO. 75662
COVER SHEET

SHEET ID
G-001

INDEX OF DRAWINGS

SHEET I.D.	SHEET DISCIPLINE	SHEET TITLE
GENERAL		
G-001	GENERAL	COVER SHEET
G-002	GENERAL	SHEET LIST
G-003	GENERAL	GROSS FLOOR AREA CALCULATIONS
GI001	GENERAL	LIFE SAFETY CODES
GI002	GENERAL	LIFE SAFETY CODES
GI101	GENERAL	LIFE SAFETY PLAN
GEOTECHNICAL		
B-101	GEOTECHNICAL	SUBSURFACE INVESTIGATION BORING RECORDS
B-102	GEOTECHNICAL	SUBSURFACE INVESTIGATION BORING RECORDS
CIVIL		
C-101	CIVIL	EXISTING CONDITIONS
C-102	CIVIL	DEMOLITION PLAN
C-103	CIVIL	CIVIL NOTES
C-104	CIVIL	SITE PLAN
C-105	CIVIL	DRAINAGE + GRADING
C-105A	CIVIL	DETAILED PLAYGROUND DRAINAGE PLAN
C-106	CIVIL	UTILITY PLAN
C-107	CIVIL	EROSION + SEDIMENT CONTROL PLAN
C-201	CIVIL	SANITARY + STORM PROFILES
C-501	CIVIL	SITE DETAILS - SHEET #1
C-502	CIVIL	SITE DETAILS - SHEET #2
C-503	CIVIL	UTILITY DETAILS - SHEET #1
C-504	CIVIL	UTILITY DETAILS - SHEET #2
C-505	CIVIL	EROSION + SEDIMENT CONTROL DETAILS
C-701	CIVIL	CONSTRUCTION ACCESS/ STAGING
LANDSCAPE		
L-001	LANDSCAPE	LANDSCAPE NOTES & PLANT SCHEDULE
L-101	LANDSCAPE	LANDSCAPE PLAN
L-501	LANDSCAPE	LANDSCAPE DETAILS
STRUCTURAL		
S-001	STRUCTURAL	GENERAL NOTES & DESIGN CRITERIA
S-002	STRUCTURAL	GENERAL NOTES
S-003	STRUCTURAL	LOADING PLANS
S-004	STRUCTURAL	LOADING DIAGRAMS
S-005	STRUCTURAL	SCHEDULES
S-006	STRUCTURAL	3D VIEWS
S-101	STRUCTURAL	FIRST FLOOR SLAB AND FOUNDATION PLAN
S-102	STRUCTURAL	T.O. WALL FRAMING PLAN
S-103	STRUCTURAL	ROOF FRAMING PLAN
S-104	STRUCTURAL	CANOPY FRAMING PLANS
S-201	STRUCTURAL	BUILDING SECTIONS
S-202	STRUCTURAL	CANOPY SECTIONS
S-203	STRUCTURAL	SHEAR WALL ELEVATIONS
S-204	STRUCTURAL	SHEAR WALL ELEVATIONS
S-205	STRUCTURAL	TRUSS ELEVATIONS
S-206	STRUCTURAL	TRUSS ELEVATIONS
S-301	STRUCTURAL	TYPICAL FOUNDATION DETAILS
S-302	STRUCTURAL	TYPICAL FOUNDATION DETAILS
S-303	STRUCTURAL	FOUNDATION DETAILS
S-401	STRUCTURAL	TYPICAL CMU DETAILS
S-402	STRUCTURAL	TYPICAL CMU DETAILS
S-501	STRUCTURAL	TYPICAL STEEL DETAILS
S-502	STRUCTURAL	STEEL DETAILS
S-503	STRUCTURAL	STEEL DETAILS
ARCHITECTURAL		
A-001	ARCHITECTURAL	ABBREVIATIONS + MATERIALS LEGEND
A-010	ARCHITECTURAL	CONCRETE SLAB EDGE PLAN
A-011	ARCHITECTURAL	AIR BARRIER ZONE PLAN
A-012	ARCHITECTURAL	AIR BARRIER DETAILS
A-100	ARCHITECTURAL	ARCHITECHTURAL SITE PLAN
A-101	ARCHITECTURAL	FIRST FLOOR PLAN
A-101A	ARCHITECTURAL	ENLARGED FLOOR PLAN - AREA A
A-101B	ARCHITECTURAL	ENLARGED FLOOR PLAN - AREA B
A-102	ARCHITECTURAL	REFLECTED CEILING PLAN
A-102A	ARCHITECTURAL	ENLARGED RCP - AREA A
A-102B	ARCHITECTURAL	ENLARGED RCP - AREA B
A-104	ARCHITECTURAL	ROOF PLAN
A-201	ARCHITECTURAL	ELEVATIONS - N/S
A-202	ARCHITECTURAL	ELEVATIONS - E/W
A-203	ARCHITECTURAL	ENLARGED ELEVATIONS NORTH
A-204	ARCHITECTURAL	ENLARGED ELEVATIONS SOUTH
A-206	ARCHITECTURAL	ENLARGED ELEVATION EAST & WEST
A-301	ARCHITECTURAL	BUILDING LONGITUDINAL SECTIONS
A-302	ARCHITECTURAL	BUILDING CROSS SECTIONS
A-310	ARCHITECTURAL	WALL SECTIONS
A-311	ARCHITECTURAL	WALL SECTIONS 02
A-400	ARCHITECTURAL	MAIN + ACTIVE PLAYROOM ENTRANCE PLAN, ELEV, SEC, & DETAILS
A-401	ARCHITECTURAL	WALKWAY CANOPY PLAN, ELEV, SEC & DETAILS
A-402	ARCHITECTURAL	CORRIDOR EXIT PLAN, ELEV, SEC & DETAILS
A-403	ARCHITECTURAL	MECHANICAL YARD ENCLOSURE PLAN, SECTION, AND ELEVATION
A-403A	ARCHITECTURAL	MECHANICAL YARD ENCLOSURE PLAN, SECTION, AND ELEVATION_ALT 01
A-404	ARCHITECTURAL	MISC EXTERIOR DETAILS
A-405	ARCHITECTURAL	ROOF SERVICE PLATFORM
A-406	ARCHITECTURAL	ACCESSORY MOUNTING HGTS/ABA DETAILS
A-407	ARCHITECTURAL	ENLARGED TOILET ROOM PLANS
A-408	ARCHITECTURAL	TOILET PARTITION ELEVATION DETAILS
A-410	ARCHITECTURAL	CASEWORK PLAN - AREA A
A-411	ARCHITECTURAL	CASEWORK PLAN - AREA B
A-412	ARCHITECTURAL	DIAPER CHANGING STATION DETAILS
A-413	ARCHITECTURAL	INTERIOR ELEVATIONS - STORAGE
A-414	ARCHITECTURAL	INTERIOR ELEVATIONS
A-415	ARCHITECTURAL	INTERIOR ELEVATIONS
A-416	ARCHITECTURAL	RECEPTION DESK DETAILS
A-420	ARCHITECTURAL	MILLWORK DETAILS
A-421	ARCHITECTURAL	CASEWORK DETAILS
A-422	ARCHITECTURAL	CASEWORK DETAILS
A-500	ARCHITECTURAL	ROOF DETAILS
A-502	ARCHITECTURAL	ROOF DETAILS 02
A-503	ARCHITECTURAL	CEILING DETAILS
A-504	ARCHITECTURAL	WALL DETAILS
A-600	ARCHITECTURAL	PARTITION TYPES
A-601	ARCHITECTURAL	PARTITION TYPES 02
A-602	ARCHITECTURAL	PARTITION DETAILS

INDEX OF DRAWINGS

SHEET I.D.	SHEET DISCIPLINE	SHEET TITLE
A-603	ARCHITECTURAL	MISC. INTERIOR DETAILS
A-610	ARCHITECTURAL	DOOR SCHEDULE, TYPES AND DETAILS
A-611	ARCHITECTURAL	DOOR DETAILS
A-612	ARCHITECTURAL	WINDOW SCHEDULE, TYPES AND DETAILS
A-613	ARCHITECTURAL	WINDOW DETAILS
A-614	ARCHITECTURAL	EXTERIOR SIGNAGE
A-800	ARCHITECTURAL	PERSPECTIVE VIEWS
A-801	ARCHITECTURAL	INTERIOR PERSPECTIVES
INTERIORS		
IF100	INTERIORS	OVERALL FF&E PLAN
IF101	INTERIORS	FF&E PLAN - AREA A
IF102	INTERIORS	FF&E PLAN - AREA B
IF401	INTERIORS	TYPICAL INFANT / PRE-TODDLER ACTIVITY ROOM - ENLARGED FF&E PLAN
IF402	INTERIORS	SMALL PRE-TODDLER / TODDLER ACTIVITY ROOM - ENLARGED FF&E PLAN
IF403	INTERIORS	TYPICAL LARGE PRE-TODDLER / TODDLER ACTIVITY ROOM - ENLARGED FF&E PLAN
IF404	INTERIORS	PRESCHOOL ACTIVITY ROOM - ENLARGED FF&E PLAN
IF405	INTERIORS	OUTREACH / TRANSITIONAL CARE ACTIVITY ROOM - ENLARGED FF&E PLAN
IF601	INTERIORS	FF&E LEGEND
IN100	INTERIORS	OVERALL INTERIOR FLOOR FINISH PLAN
IN101	INTERIORS	INTERIOR FINISH PLAN - AREA A
IN102	INTERIORS	INTERIOR FINISH PLAN - AREA B
IN501	INTERIORS	INTERIOR FINISH DETAILS
IN601	INTERIORS	INTERIOR FINISH LEGEND
IS101	INTERIORS	INTERIOR SIGNAGE PLAN - AREA A
IS102	INTERIORS	INTERIOR SIGNAGE PLAN - AREA B
IS103	INTERIORS	INTERIOR SIGNAGE LEGEND, ELEVATIONS & DETAILS
IS104	INTERIORS	INTERIOR SIGNAGE DETAILS
FIRE PROTECTION		
FA-001	FIRE PROTECTION	FIRE ALARM GENERAL NOTES, SYMBOLS & ABBREVIATIONS
FA-101	FIRE PROTECTION	OVERALL FIRST FLOOR FIRE ALARM PLAN
FX-001	FIRE PROTECTION	FIRE PROTECTION GENERAL NOTES & LEGENDS
FX-101	FIRE PROTECTION	FIRE FLOOR FIRE PROTECTION PLAN
PLUMBING		
P-001	PLUMBING	PLUMBING GENERAL NOTES AND LEGENDS
P-100	PLUMBING	PLUMBING OVERALL FLOOR PLAN
P-101	PLUMBING	DOMESTIC WATER PIPING PLAN
P-102	PLUMBING	DOMESTIC WATER PIPING PLAN II
P-103	PLUMBING	SANITARY WASTE OVERALL PLAN
P-104	PLUMBING	SANITARY WASTE PLAN A
P-105	PLUMBING	SANITARY WASTE PLAN B
P-106	PLUMBING	VENTING PLAN A
P-107	PLUMBING	VENTING PLAN B
P-401	PLUMBING	KITCHEN
P-501	PLUMBING	PLUMBING DETAILS
P-502	PLUMBING	PLUMBING DETAILS
P-503	PLUMBING	PLUMBING DETAILS
P-601	PLUMBING	PLUMBING SCHEDULES
P-602	PLUMBING	PLUMBING SCHEDULES II
P-701	PLUMBING	DOMESTIC WATER RISER DIAGRAM
P-702	PLUMBING	SANITARY WASTE DRAINAGE RISER DIAGRAM
MECHANICAL		
M-001	MECHANICAL	MECHANICAL GENERAL NOTES AND LEGENDS
M-101	MECHANICAL	FLOOR PLAN - OVERALL
M-102	MECHANICAL	FLOOR PLAN - AREA A
M-103	MECHANICAL	FLOOR PLAN - AREA B
M-104	MECHANICAL	FLOOR PLAN - MEHCANICAL PIPING
M-105	MECHANICAL	MECHANICAL ROOF PLAN
M-301	MECHANICAL	MECHANICAL SECTIONS
M-302	MECHANICAL	MECHANICAL SECTIONS
M-401	MECHANICAL	ENLARGED PLANS
M-402	MECHANICAL	ENLARGED PLANS
M-501	MECHANICAL	DETAILS
M-502	MECHANICAL	DETAILS
M-503	MECHANICAL	HVAC SYSTEM AIRFLOW DIAGRAM
M-504	MECHANICAL	CHILLED WATER SYSTEM FLOW DIAGRAM
M-601	MECHANICAL	EQUIPMENT SCHEDULE
M-602	MECHANICAL	EQUIPMENT SCHEDULE
M-801	MECHANICAL	CONTROLS LEGEND, SYMBOLS, AND ABBREVIATIONS
M-802	MECHANICAL	CONTROLS POINTS SCHEDULE INSTRUCTIONS AND BAS ARCHITECTURE
M-803	MECHANICAL	AHU-1 CONTROL SCHEMATIC AND SEQUENCE OF OPERATIONS
M-804	MECHANICAL	AHU-1 POINTS SCHEDULE
M-805	MECHANICAL	CHILLER CONTROL SCHEMATIC AND SEQUENCE OF OPERATIONS
M-806	MECHANICAL	CHILLER POINTS SCHEDULE
M-807	MECHANICAL	VAV BOX WITH ELECTRIC REHEAT CONTROLS AND POINTS SCHEDULE
M-808	MECHANICAL	EXHAUST FAN 3-4 CONTROLS AND POINTS LIST
M-809	MECHANICAL	EXHAUST FAN 5-6 CONTROLS AND POINTS LIST
M-810	MECHANICAL	MAU-1 AND KITCHEN EXHAUST CONTROLS
M-811	MECHANICAL	MAU-1 AND KITCHEN EXHAUST POINTS SCHEDULE
M-812	MECHANICAL	UNIT HEATERS AND SPLIT UNITS CONTROLS
M-813	MECHANICAL	HUMIDIFIER CONTROLS AND POINTS SCHEDULE
ELECTRICAL		
E-001	ELECTRICAL	ELECTRICAL - LEGEND - POWER AND LIGHTING
E-002	ELECTRICAL	ELECTRICAL - LEGEND - TYPICAL POWER FIXTURES AND EXIT SIGNS MOUNTING HEIGHTS
EG101	ELECTRICAL	ELECTRICAL - LIGHTNING PROTECTION AND GROUNDING PLAN
EG501	ELECTRICAL	ELECTRICAL - GROUNDING DETAILS
EL101	ELECTRICAL	ELECTRICAL - LIGHTING - RCP - AREA A
EL102	ELECTRICAL	ELECTRICAL - LIGHTING - RCP - AREA B
EL103	ELECTRICAL	ELECTRICAL - LIGHTING - RCP - DAYLIGHT HARVESTING - AREA A
EL104	ELECTRICAL	ELECTRICAL - LIGHTING - RCP - DAYLIGHT HARVESTING - AREA B
EL501	ELECTRICAL	ELECTRICAL - LIGHTING - DETAILS
EL502	ELECTRICAL	ELECTRICAL - LIGHTING - DETAILS
EL503	ELECTRICAL	ELECTRICAL - LIGHTING - DETAILS
EL601	ELECTRICAL	ELECTRICAL - LIGHTING - LIGHT FIXTURE SCHEDULE
EL602	ELECTRICAL	ELECTRICAL - LIGHTING - LIGHTING CONTROLS
EP101	ELECTRICAL	ELECTRICAL - POWER - AREA A
EP102	ELECTRICAL	ELECTRICAL - POWER - AREA B
EP103	ELECTRICAL	ELECTRICAL - POWER - DISCONNECTING MEANS - AREA A
EP104	ELECTRICAL	ELECTRICAL - POWER - DISCONNECTING MEANS - AREA B
EP105	ELECTRICAL	ELECTRICAL - POWER - ROOF PLAN
EP401	ELECTRICAL	ELECTRICAL - POWER - PART PLANS AND ELEVATIONS
EP402	ELECTRICAL	ELECTRICAL - POWER - PART PLANS AND ELEVATIONS
EP601	ELECTRICAL	ELECTRICAL - POWER - SINGLE LINE DIAGRAM
EP701	ELECTRICAL	ELECTRICAL - PANEL SCHEDULES
EP702	ELECTRICAL	ELECTRICAL - PANEL SCHEDULES

INDEX OF DRAWINGS

SHEET I.D.	SHEET DISCIPLINE	SHEET TITLE
EP703	ELECTRICAL	ELECTRICAL - PANEL SCHEDULES
EP704	ELECTRICAL	ELECTRICAL - PANEL SCHEDULES
EP705	ELECTRICAL	ELECTRICAL - PANEL SCHEDULES
EP706	ELECTRICAL	ELECTRICAL - HVAC & EQUIPMENT SCHEDULE
EP707	ELECTRICAL	ELECTRICAL - HVAC & EQUIPMENT SCHEDULE
ES101	ELECTRICAL	ELECTRICAL - POWER - SITE PLAN
ES102	ELECTRICAL	ELECTRICAL - LIGHTING - SITE PLAN
ES501	ELECTRICAL	ELECTRICAL - SITE DETAILS
ES502	ELECTRICAL	ELECTRICAL - SITE DETAILS
TELECOM		
T-001	TELECOM	GENERAL TELECOMMUNICATIONS NOTES AND LEGEND
TS101	TELECOM	TELECOMMUNICATIONS SITE PLAN
TS501	TELECOM	TELECOMMUNICATIONS SITE DETAILS
T-101	TELECOM	TELECOMMUNICATIONS FLOOR PLAN -OVERALL
T-102	TELECOM	TELECOMMUNICATIONS FLOOR PLAN - AREA "A"
T-103	TELECOM	TELECOMMUNICATIONS FLOOR PLAN - AREA "B"
T-104	TELECOM	TELECOMMUNICATIONS CEILING PLAN - OVERALL
T-105	TELECOM	TELECOMMUNICATIONS CEILING PLAN - AREA "A"
T-106	TELECOM	TELECOMMUNICATIONS CEILING PLAN - AREA "B"
T-201	TELECOM	TELECOMMUNICATIONS ELEVATIONS
T-401	TELECOM	ENLARGED PLANS
T-501	TELECOM	TELECOMMUNICATIONS DETAILS
T-502	TELECOM	TELECOMMUNICATIONS DETAILS
T-503	TELECOM	TELECOMMUNICATIONS DETAILS
T-504	TELECOM	TELECOMMUNICATIONS DETAILS
T-505	TELECOM	SECURITY DETAILS
T-506	TELECOM	SECURITY DETAILS
T-507	TELECOM	TELECOMMUNICATIONS DETAILS
T-701	TELECOM	TELECOMMUNICATIONS ONE-LINES
FOOD SERVICE		
QF-101	FOOD SERVICE	FIRST FLOOR FOOD SERVICE EQUIPMENT DRAWING
QF-102	FOOD SERVICE	FOODSERVICE EQUIPMENT ELECTRICAL POC DRAWING
QF-103	FOOD SERVICE	FOOD SERVICE EQUIPMENT PLUMBING POC DRAWING
QF-104	FOOD SERVICE	FOOD SERVICE EQUIPMENT HVAC & FLOOR RECESS DRAWING
QF-105	FOOD SERVICE	FOOD SERVICE EQUIPMENT MEP POC SCHEDULE
QF-106	FOOD SERVICE	CONDENSATE HOOD ITEM #18 DRAWING
QF-107	FOOD SERVICE	EXHAUST HOOD ITEM #33 DRAWING
QF-108	FOOD SERVICE	WALK-IN COOLER/FREEZER ITEM #1 DRAWING
PLAYGROUND		
PG-100	PLAYGROUND	PLAYGROUND PLAN
PG-101	PLAYGROUND	INFANT PLAYGROUND PLAN
PG-102	PLAYGROUND	TODDLER/PRESCHOOL PLAYGROUND PLAN
PG-103	PLAYGROUND	PRE-KINDERGARTEN PLAYGROUND PLAN
PG-501	PLAYGROUND	PLAYGROUND PLAN DETAILS
PG-502	PLAYGROUND	PLAYGROUND PLAN DETAILS
PG-503	PLAYGROUND	PLAYGROUND EQUIPMENT NOTES - PLAYGROUND A
PG-504	PLAYGROUND	PLAYGROUND EQUIPMENT NOTES - PLAYGROUND B
PG-505	PLAYGROUND	PLAYGROUND EQUIPMENT NOTES - PLAYGROUND C

US Army Corps of Engineers ®

MARK	DESCRIPTION	DATE

FILE LOCATION: R:\dms29778\FH-CDC-DMM-A.rvt
PLOT DATE: 9/30/2025 11:31:43 AM

ISSUE DATE: AUGUST 29, 2025
SOLICITATION NO.: W912DS23F0031
CONTRACT NO.: W912DS19D0007

DESIGNED BY: JKIM
DRAWN BY: JKIM
CHECKED BY: Checker
SUBMITTED BY:
SIZE: ANSI D

US ARMY CORPS OF ENGINEERS
NEW YORK DISTRICT
26 FEDERAL PLAZA, NEW YORK, NY 10278

CHILD DEVELOPMENT CENTER
USAG FORT HAMILTON, NEW YORK
PROJECT NO. 75662

SHEET LIST

SHEET ID

G-002

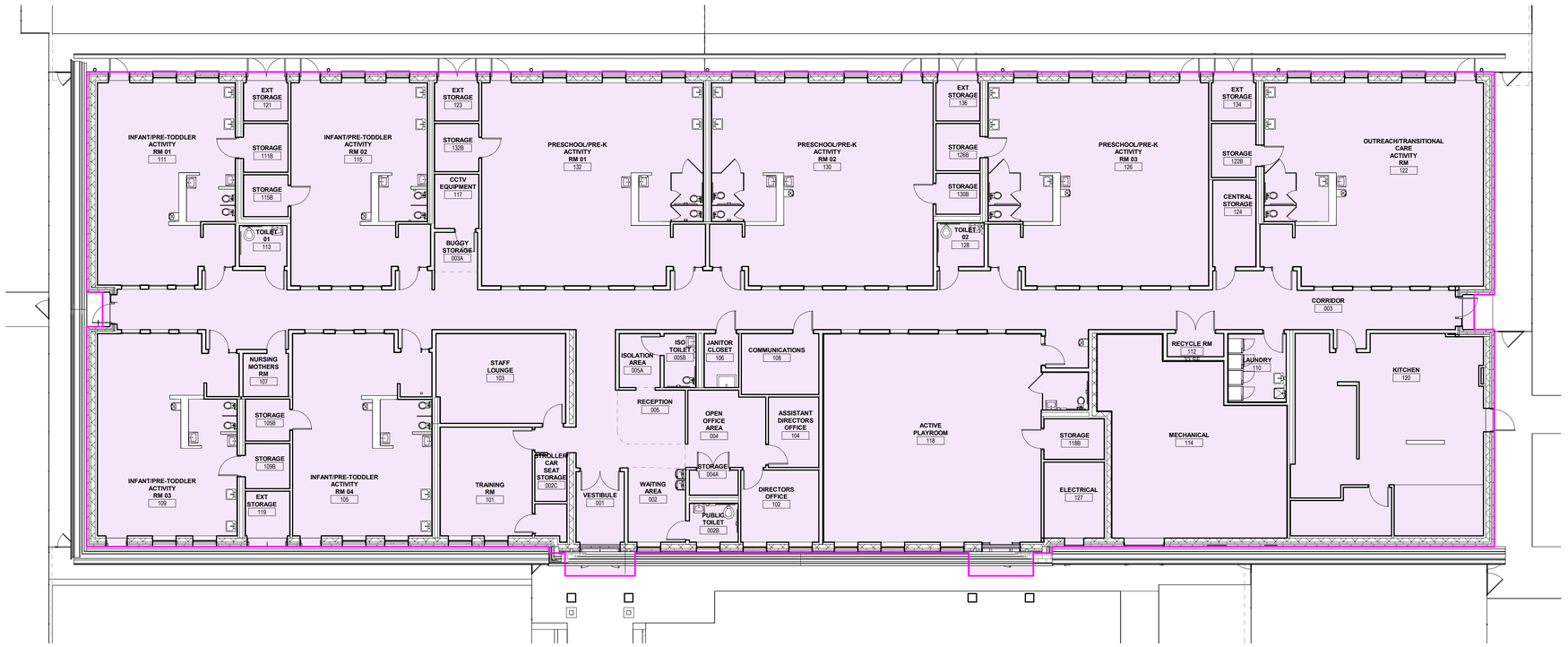

Gross Building Area

16632 SF

1 FIRST FLOOR GROSS SQUARE FOOTAGE PLAN

3/32" = 1'-0"

Room Schedule		
Number	Name	Net Area
001	VESTIBULE	84 SF
002	WAITING AREA	106 SF
002B	PUBLIC TOILET	47 SF
002C	STROLLER/ CAR SEAT STORAGE	38 SF
003	CORRIDOR	1823 SF
003A	BUGGY STORAGE	42 SF
004	OPEN OFFICE AREA	146 SF
004A	STORAGE	30 SF
005	RECEPTION	91 SF
005A	ISOLATION AREA	55 SF
005B	ISO TOILET	42 SF
101	TRAINING RM	247 SF
101A	STORAGE	26 SF
102	DIRECTORS OFFICE	139 SF
103	STAFF LOUNGE	284 SF
104	ASSISTANT DIRECTORS OFFICE	88 SF
105	INFANT/PRE-TODDLER ACTIVITY RM 04	660 SF
105B	STORAGE	46 SF
106	JANITOR CLOSET	46 SF
107	NURSING MOTHERS RM	48 SF
108	COMMUNICATIONS	116 SF
109	INFANT/PRE-TODDLER ACTIVITY RM 03	664 SF
109B	STORAGE	49 SF
110	LAUNDRY	97 SF
111	INFANT/PRE-TODDLER ACTIVITY RM 01	631 SF
111B	STORAGE	54 SF
112	RECYCLE RM	32 SF
113	TOILET 01	48 SF
114	MECHANICAL	756 SF
115	INFANT/PRE-TODDLER ACTIVITY RM 02	652 SF
115B	STORAGE	46 SF
117	CCTV EQUIPMENT	59 SF
118	ACTIVE PLAYROOM	1162 SF
118B	STORAGE	60 SF
119	EXT STORAGE	49 SF
120	KITCHEN	914 SF
121	EXT STORAGE	42 SF
122	OUTREACH/TRANSITIONAL CARE ACTIVITY RM	1071 SF

Room Schedule		
Number	Name	Net Area
122B	STORAGE	59 SF
123	EXT STORAGE	42 SF
124	CENTRAL STORAGE	92 SF
126	PRESCHOOL/PRE-K ACTIVITY RM 03	1070 SF
126B	STORAGE	51 SF
127	ELECTRICAL	113 SF
128	TOILET 02	51 SF
130	PRESCHOOL/PRE-K ACTIVITY RM 02	1079 SF
130B	STORAGE	44 SF
132	PRESCHOOL/PRE-K ACTIVITY RM 01	1078 SF
132B	STORAGE	53 SF
134	EXT STORAGE	42 SF
136	EXT STORAGE	41 SF
: 51		14405 SF

Total Net Square Footage: 14,425 SF

Total Gross Square Footage: 16,632 SF

0 8' 16' 32'

SCALE: 3/32" = 1'-0"

PLAN NORTH

US Army Corps of Engineers ®

MARK	DESCRIPTION	DATE

PLOT DATE: 9/30/2025 12:42:00 AM FILE LOCATION: R:\dms29778\FH-CDC-DMM-A.rvt

DESIGNED BY: JKIM
DRAWN BY: JKIM
CHECKED BY: Checker
SUBMITTED BY:
ISSUE DATE: AUGUST 29, 2025
SOLICITATION NO.: W912DS23F0031
CONTRACT NO.: W912DS15D0007
SIZE: ANSI D

US ARMY CORPS OF ENGINEERS
NEW YORK DISTRICT
26 FEDERAL PLAZA, NEW YORK, NY 10278

CHILD DEVELOPMENT CENTER
USAG FORT HAMILTON, NEW YORK
PROJECT NO. 75662

GROSS FLOOR AREA CALCULATIONS

SHEET ID

G-003

PROJECT'S APPLIED CODES AND STANDARDS

A. ANSI/ASHRAE/USGBC/IES STANDARD 189.1-(2013) STANDARD FOR THE DESIGN OF HIGH-PERFORMANCE GREEN BUILDINGS EXCEPT LOW-RISE RESIDENTIAL BUILDINGS, (DATE PUBLISHED).
B. (2021) INTERNATIONAL BUILDING CODE (IBC), INTERNATIONAL CODE COUNCIL
C. (2021) INTERNATIONAL PLUMBING CODE (IPC), INTERNATIONAL CODE COUNCIL
D. UNIFIED FACILITIES CRITERIA (UFC) 1-200-01 GENERAL BUILDING REQUIREMENTS, DEPARTMENT OF DEFENSE, (01 SEPT 2022)
E. UFC 1-200-02 HIGH PERFORMANCE AND SUSTAINABLE BUILDING REQUIREMENTS, DEPARTMENT OF DEFENSE,1 DECEMBER 2020 (CHANGE 02, 01 JUNE 2022)
F. UFC 3-101-01 ARCHITECTURE, DEPARTMENT OF DEFENSE,(16 DECEMBER 2020) (CHANGE 1, 05 JANUARY 2021)
UFC 3-101-01 ARCHITECTURE, DEPARTMENT OF DEFENSE,(16 DECEMBER 2020, CHANGE 1, 5 JANUARY 2021)
G. UFC 3-110-03 ROOFING, DEPARTMENT OF DEFENSE, (01 MAY 2012, CHANGE 5, 12 JUNE 2020)
H. UFC 3-600-01 FIRE PROTECTION ENGINEERING FOR FACILITIES, DEPARTMENT OF DEFENSE, (08 AUGUST 2016) (CHANGE 2, 30 JULY 2022)
I. UFC 4-010-01 DOD MINIMUM ANTITERRORISM STANDARDS FOR BUILDINGS, DEPARTMENT OF DEFENSE, (12 DECEMBER 2018) (CHANGE 2, 30 JULY 2022)
J. NFPA 101 LIFE SAFETY CODE, NATIONAL FIRE PROTECTION ASSOCIATION, (2021) EDITION
K. FORT HAMILTON INSTALLATION DESIGN GUIDE
L. ABA ACCESSIBILITY STANDARD FOR DEPARTMENT OF DEFENSE FACILITIES AS SIGNED AND ADOPTED BY THE DEPUTY SECRETARY OF DEFENSE MEMORANDUM DATED (2015)

UFC 4-010-01 MINIMUM ANTITERRORISM STANDARDS FOR BUILDINGS

3-3 THE UNOBSTRUCTED SPACE WILL EXTEND 33-FEET TO THE EDGE OF THE CLEAR ZONE.

3-3.3 M/E/P EQUIPMENT MAY BE LOCATED IN UNOBSTRUCTED SPACES IF THEY ARE ENCLOSED. ENCLOSURES OR SCREEN WALLS MUST COMPLY WITH 3-3.6.

3-10.1 EXTERIOR UNREINFORCED MASONRY VENEER WITH CONCRETE MASONRY SHALL MEET THE ANALYSIS ASSUMPTIONS OF TABLE C-5 IAW, UFC 4-010-01.

3-11.2 EXTERIOR DOORS, WINDOWS AND INNER DOORS THAT ARE INTERIOR TO THE VESTIBULE MUST MEET THE REQUIREMENTS OF UFC 4-010-01.

3-16 OVERHEAD MOUNTED FEATURES WEIGHING 31 POUNDS OR MORE SHALL BE MOUNTED USING SYSTEMS THAT MINIMIZE THE LIKELIHOOD OF FALLING.

3-17.1 AIR INTAKES SHALL BE AT LEAST 10-FEET OFF THE GROUND, UNLESS THEY ARE ENCLOSED.

1. BUILDING OCCUPANCY GROUP IBC 2021

IBC 303	ASSEMBLY	A-1 ☐ A-2 ☐ A-3 ☐ A-4 ☐ A-5 ☐
IBC 304	BUSINESS (ADMIN SPACE)	B ☒
IBC 305	EDUCATIONAL	E ☐
IBC 306	FACTORY AND INDUSTRIAL	F-1 ☐ F-2 ☐
IBC 307	HIGH HAZARD	H-1 ☐ H-2 ☐ H-3 ☐ H-4 ☐ H-5 ☐
IBC 307	HIGH HAZARD	H-1 ☐ H-2 ☐ H-3 ☐ H-4 ☐

IBC 308	INSTITUTIONAL	I-1 ☐ I-2 ☐ I-3 ☐ I-4 ☒
IBC 309	MERCANTILE	M ☐
IBC 310	RESIDENTAL (DORMS)	R-1 ☐ R-2 ☐ R-3 ☐ R-4 ☐
IBC 311	STORAGE STORAGE (LOW HAZARD) UTILITY AND MISCELLANEOUS	S-1 ☒ S-2 ☐ U ☐

2. BUILDING OCCUPANCY GROUP NFPA 101 (2021) (NEW BUILDING)

CHAPTER 12	ASSEMBLY	☐	
CHAPTER 38	BUSINESS	☒	ADMIN AREA
CHAPTER 16	DAY CARE	☒	ACTIVITY RMS
CHAPTER 22	DETENTION AND CORRECTIONAL	☐	
CHAPTER 14	EDUCATIONAL	☐	
CHAPTER 18	HEALTH CARE	☐	
CHAPTER 40	INDUSTRIAL	☐	
CHAPTER 36	MERCANTILE	☐	
CHAPTER 28	RESIDENTIAL (HOTEL AND DORMS)	☐	
CHAPTER 42	STORAGE	☒	STORAGE

3. CONSTRUCTION TYPE

		A	B	HT
IBC 601	TYPE I	☐	☐	
	TYPE II	☐	☒	
	TYPE III	☐	☐	
	TYPE IV			☐
	TYPE IV	☐	☐	

4. SPRINKLER SYSTEM

IBC 601	BUILDING IS PROTECTED WITH AUTOMATIC SPRINKLER SYSTEM	S	☒
	NON-SPRINKLERED	NS	☐

5. BUILDING SEPARATIONS

IBC TABLE 601	FIRE RATING BASED ON CONSTRUCTION TYPE (PRIMARY STRUCTURAL FRAME)	TYPE: IIB = 0 HR
IBC TABLE 705.5	IMAGINARY LOT LINE = 10'-0" FROM BUILDING *IS AT LEAST 30'-0" FROM ADJACENT BUILDING	X ≥ 10' = 0 HR X ≥ 30' = 0 HR EXTERIOR FIRE RATING

6. AREA LIMITATIONS

IBC 506.2.1 EQUATION 5-1	ALLOWABLE OCCUPANCY FORMULA: (SINGLE OCCUPANCY 3 STORIES MAX)	*Aa = At + (NS × If)*	
IBC 506.2.1 EQUATION 5-3	ALLOWABLE OCCUPANCY FORMULA: (MIXED OCCUPANCY CALCULATE FOR EACH STORY)	*Aa* = [*At* + (*NS* × *If*)]	
IBC 506.2.1 EQUATION 5-3	DAYCARE OCCUPANCIES: B, I-4, S-1 # OF STORIES= 1	FORMULA TO USE: *Aa* = [*At* + (*NS* × *If*)]	
IBC 506.2.1 EQUATION 5-3. IBC TABLE 506.2 IBC 506.3	CALCULATIONS FOR B OCCUPANCY	*Aa* = [*At* + (*NS* × *If*)] *At = SM* = 69,000 *NS* = 23,000 *If* = 0 *Aa* = [69,000SF + (23,000 x 0)] *Aa*= 69,000 SF	
IBC 506.2.1 EQUATION 5-3. IBC TABLE 506.2 IBC 506.3	CALCULATIONS FOR S-1 OCCUPANCY	*Aa* = [*At* + (*NS* × *If*)] *At = S1* = 70,000 *NS* = 17,500 *If* = 0 *Aa* = [70,000SF + (32,000 x 0)] *Aa*= 70,000 SF	
IBC 506.2.1 EQUATION 5-3. IBC TABLE 506.2 IBC 506.3	CALCULATIONS FOR I-4 OCCUPANCY	*Aa* = [*At* + (*NS* × *If*)] *At = SM* = 52,000 *NS* = 13,000 *If* = 0 *Aa* = [52,000SF + (16,000 x 0)] *Aa*= 52,000 SF	
IBC 508.3 (MIXED, NON-SEPARATED OCCUPANCIES)	TOTAL SQ FOOTAGE OF OCCUPANCY IN BUILDING	ALLOWABLE	IN COMPLIANCE YES / NO
	B (FIRST FLOOR) 3,288 SF ACTUAL	92,000 SF	☒ / ☐
	I-4 (FIRST FLOOR) 8,114 SF ACTUAL	52,000 SF	☒ / ☐
	S-1 (FIRST FLOOR) 2,142 SF ACTUAL	70,000 SF	☒ / ☐

7. BUILDING HEIGHT LIMITATIONS

IBC TABLE 504.3	CONSTRUCTION TYPE	TYPE II B
	BUILDING OCCUPANCY	Business, I-4 and S-1
	SPRINKLERED OR NON SPRINKLERED S/ NS	S
	ALLOWABLE BUILDING HEIGHT	B = 4 STORIES I-4 = 3 STORIES S-1 = 3 STORIES
	ACTUAL BUILDING HEIGHT= 28'-6" ALLOWABLE BUILDING HEIGHT= 75'	IN COMPLIANCE YES ☒ NO ☐

8. FIRE RATED SEPARATION

IBC TABLE 508.4 AS PER NFPA 16.3.2.1	BUILDING OCCUPANCY SPRINKLERED OR NON SPRINKLERED S/ NS	B, I-4, S-1 S
AS PER UFC 4-740-14 SECTION 7-2.3.3	LAUNDRY ROOM	1 HOUR FIRE RATING
	MECHANICAL ROOM	RATING NOT REQ'D *1 HOUR RATING PROVIDED
	KITCHEN	RATING NOT REQ'D
NFPA 16.3.2.2	JANITORIAL ROOM	RATING NOT REQ'D (VENT LOUVERS ALLOWED)

US Army Corps of Engineers ®

MARK	DESCRIPTION	DATE

PLOT DATE: 9/30/2025 12:42:01 AM FILE LOCATION: R:\dms29778\FH-CDC-DMM-A.rvt

ISSUE DATE: AUGUST 29, 2025
SOLICITATION NO.: W912DS24F0031
CONTRACT NO.: W912DS15D0007

DESIGNED BY: JKIM
DRAWN BY: JKIM
CHECKED BY: CHECKER
SUBMITTED BY:
SIZE: ANSI D

US ARMY CORPS OF ENGINEERS
NEW YORK DISTRICT
26 FEDERAL PLAZA, NEW YORK, NY *10278*

CHILD DEVELOPMENT CENTER
USAG FORT HAMILTON, NEW YORK
PROJECT NO. *75662*

LIFE SAFETY CODES

SHEET ID

GI001

9. EGRESS TRAVEL DISTANCE

	BUILDING OCCUPANCY	Business, Daycare, Storage
NFPA 101 TABLE A.7.6	SPRINKLERED OR NON SPRINKLERED S/ NS	S
NFPA 101 38.2.6.3	BUSINESS	300FT MAX
NFPA 101 16.2.6.3	DAY CARE	200FT MAX
NFPA 101 TABLE 42.2.6	STORAGE ORDINARY HAZARD	400 FT MAX

10. NUMBER OF MEANS OF EGRESS

	BUILDING OCCUPANCY	Business, Daycare, Storage	
NFPA 101 7.4.1	OCCUPANT LOAD FIRST FLOOR:	279 NOTE: PANIC HARDWARE WILL BE PROVIDED ON MAIN CORRIDOR DOORS	
NFPA 101 7.4.1.2	NO LESS THAN 2 EXISTS IF OCCUPANT LOAD > 500	REQUIRED	PROVIDED
	FIRST FLOOR	2	19
	SECOND FLOOR	N/A	N/A
NFPA 101 42.4.2.1 (2)	MEZZANINE: SINGLE MEANS OF EGRESS IF EXIT CAN BE REACHED WITHIN COMMON PATH OF TRAVEL	N/A ≤ 100	N/A 00 ≤ 100
		IN COMPLIANCE	YES ☒ NO ☐

11. EGRESS DEAD END CORRIDORS/ COMMON PATH OF TRAVEL

	BUILDING OCCUPANCY SPRINKLERED OR NON SPRINKLERED S/ NS	Business, Daycare, Storage S		IN COMPLIANCE YES NO
NFPA 101 38.2.5.3.1 38.2.5.2.1	BUSINESS DEAD END CORRIDORS COMMON PATH OF TRAVEL	 50FT MAX 100FT MAX	 NONE 21'-9" FT ACTUAL	☒ ☐
NFPA 101 TABLE 16.2.5.2.1	DAY CARE OCCUPANCY DEAD END CORRIDORS COMMON PATH OF TRAVEL	 50 FT MAX 100 FT MAX	 NONE 22 FT ACTUAL	☒ ☐
NFPA 101 TABLE 42.2.5	STORAGE ORDINARY HAZARD DEAD END CORRIDORS COMMON PATH OF TRAVEL	 100 FT MAX 100 FT MAX	 7'-0" FT ACTUAL 23'-10" FT ACTUAL	☒ ☐

12. FIRE RATING OF CORRIDOR WALLS

	BUILDING OCCUPANCY SPRINKLERED OR NON SPRINKLERED S/ NS	Business, Daycare, Kitchen S
NFPA 101 16.3.6 38.3.6.1 42.3.6	REQUIRED CORRIDOR RATING	New Daycare = 0 HRS New Business = 0 HRS
		IN COMPLIANCE YES ☒ NO ☐

13. EXIT DISCHARGE SEPARATION

	SPRINKLERED/ NON SPRINKLERED (S/NS)	S
NFPA 101 7.5.1.3.3	MINIMUM SEPARATION BETWEEN EXITS ACCESS/ EXIT DISCHARGE = 1/3 OF TOTAL DIAGIONAL DIMENSION OF BUILDING	
	GROUND FLOOR : 228'-2 1/4" X .3 = 68.46'	84' - 6 1/4" ACTUAL SEPARATION
		IN COMPLIANCE YES ☒ NO ☐

14. INTERIOR FINISHES

NFPA 101 §10.2.3.3 - INTERIOR WALL AND CEILING FINISH MATERIALS SHALL BE TESTED IN ACCORDANCE WITH ASTM E84 OR UL 723.

CLASS A = FLAME SPREAD INDEX 0-25; SMOKE DEVELOPED INDEX 0-450
CLASS B = FLAME SPREAD INDEX 26-75; SMOKE DEVELOPED INDEX 0-450
CLASS C = FLAME SPREAD INDEX 76-200; SMOKE DEVELOPED INDEX 0-450

ALL INTERIOR FINISHES WILL MEET OR EXCEED THE INTERIOR FINISH CLASS LIMITATIONS OF NFPA 101 TABLE A.10.2.2:

OCCUPANCY	EXITS		EXIT ACCESS CORR.		OTHER SPACES	
	WALL	FLOOR	WALL	FLOOR	WALL	FLOOR
BUSINESS	A or B	I or II	A or B	I or II	A or B	N/A
DAY CARE	A	I or II	A	I or II	A or B	N/A

NFPA 101 §10.2.1.3 - LOCKERS ARE CONSIDERED INTERIOR FINISH.
NFPA 101 §10.2.4.8.2 - LOCKERS CONSTRUCTED ENTIRELY OF WOOD AND OF NONCOMBUSTIBLE MATERIALS SHALL BE PERMITTED TO BE USED WHERE INTERIOR FINISH MATERIALS SHALL BE CLASS C.

NFPA 101 §10.2.1.4 - TOILET PARTITIONS ARE CONSIDERED INTERIOR FINISH.
NFPA 101 §10.2.4.1 - HDPE MATERIAL SHALL NOT BE PERMITTED

NFPA 101 §10.2.7 - INTERIOR FLOOR FINISH CLASSIFICATION PER NFPA 253 OR ASTM E648:
CLASS II = SHALL HAVE A CRITICAL RADIANT FLUX OF NOT LESS THAN 0.22 W/cm2, BUT LESS THAN 0.45 W/cm2

15. FIRE EXTINGUISHERS

NFPA 10	CABINET MOUNTED FIRE EXTINGUISHER UNITS SHALL BE DRY CHEMICAL ABC TYPE FIRE EXTINGUISHERS TYPE K EXTINGUISHER SHALL BE PROVIDED AT KITCHEN HOOD
	FIRE EXTINGUISHER BRACKETS-BRACKET MOUNTED (UTLITY SPACES)
NFPA 96	WET CHEMICAL FIRE EXTINGUISHERS IN KITCHEN HOOD
NFPA 101 9.9 NFPA 10. Table 6.2.1.1	BUISNESS OCCUPANCY= CLASS A HAZARD= MAX 75' DISTANCE DAYCARE OCCUPANCY= CLASS A HAZARD= MAX 75' DISTANCE S-1 OCCUPANCY= CLASS C HAZARD= NEAR ENERGIZED EQUIPMENT

DOOR EGRESS LOADS NFPA 101 7.3.3.1

Mark	WIDTH	WIDTH/ OCCUPANT	DOOR CAPACITY	OCCUPANT LOAD SERVED
001	6' - 0"	0.2	340	54
105-3	3' - 0"	0.2	160	1
109-3	3' - 0"	0.2	160	10
111-3	3' - 0"	0.2	160	10
115-3	3' - 0"	0.2	160	10
118-3	3' - 0"	0.2	160	16
119	6' - 0"	0.2	340	1
121	6' - 0"	0.2	340	1
122-3	3' - 0"	0.2	160	16
123	6' - 0"	0.2	340	1
125	3' - 0"	0.2	160	49
126-3	3' - 0"	0.2	160	16
127	3' - 0"	0.2	160	1
129	6' - 0"	0.2	340	2
130-3	3' - 0"	0.2	160	16
132-3	3' - 0"	0.2	160	16
134	6' - 0"	0.2	340	1
136	6' - 0"	0.2	340	1
147	3' - 4"	0.2	180	5
148	3' - 0"	0.2	160	49

ROOM, SPACE, AREA	Area	Factor	AS-OF-RIGHT Occupant load Total	Per sex	Occ class	Number of required fixtures: Water Closets M	W	Lavatories M	W	DFs
ACTIVITY RMS *as per IPC Table 403.1 # of fixtures required is 1 per 15 people.	8044	35 N	229.83	114.91	I	7.7	7.7	7.7	7.7	2.3
Total Required (Children)						7.7	7.7	7.7	7.7	2.3
Total Provided (Children)						9.5	9.5	9.5	9.5	10.0
OFFICES, NURSING RM, STAFF LOUNGE, WAITING AREA, RECEPTION	3865	150 G	25.77	12.88	B					
TRAINING RM	246	30 G	8.20	4.10	B					
KITCHEN	915	200 G	4.58	2.29	B					
STORAGE	871	500 G	1.74	0.87	B					
*as per IPC Table 403.1 # of fixtures required for 4 spaces with 1 fixt required			40.28	20.14	B	1.0	1.0	1.0	1.0	1.0
Total Required (Adults)						1.0	1.0	1.0	1.0	1.0
Total Provided (Adults)						1.5	1.5	1.5	1.5	2.0

BUILDING OCCUPANCY ANALYSIS - FIRST FLOOR

Rm No.	ROOM NAME	NFPA TABLE 7.3.1.2 OCCUPANT LOAD FACTOR ASSEMBLY USE	SF/ PERSON	AREA	MAX OCC LOAD CALC	IBC OCC CLASS. GROUP
001	VESTIBULE	BUSINESS (GROUP B)	150 SF	84 SF	1	B
002	WAITING AREA	BUSINESS (GROUP B)	150 SF	106 SF	1	B
002B	PUBLIC TOILET	BUSINESS (GROUP B)	150 SF	47 SF	1	B
003	CORRIDOR	BUSINESS (GROUP B)	150 SF	1823 SF	13	B
004	OPEN OFFICE AREA	BUSINESS (GROUP B)	150 SF	146 SF	1	B
005	RECEPTION	BUSINESS (GROUP B)	150 SF	91 SF	1	B
005A	ISOLATION AREA	BUSINESS (GROUP B)	150 SF	55 SF	1	B
005B	ISO TOILET	BUSINESS (GROUP B)	150 SF	42 SF	1	B
102	DIRECTORS OFFICE	BUSINESS (GROUP B)	150 SF	139 SF	1	B
104	ASSISTANT DIRECTORS OFFICE	BUSINESS (GROUP B)	150 SF	88 SF	1	B
107	NURSING MOTHERS RM	BUSINESS (GROUP B)	150 SF	48 SF	1	B
113	TOILET 01	BUSINESS (GROUP B)	150 SF	48 SF	1	B
128	TOILET 02	BUSINESS (GROUP B)	150 SF	51 SF	1	B
101	TRAINING RM	BUSINESS COLLABORATION <450SF (GROUP A)	20 SF	247 SF	13	B
103	STAFF LOUNGE	BUSINESS COLLABORATION <450SF (GROUP A)	30 SF	284 SF	10	B
105	INFANT/PRE-TODDLER ACTIVITY RM 04	DAYCARE (GROUP I-4)	35 SF	660 SF	19	I-4
109	INFANT/PRE-TODDLER ACTIVITY RM 03	DAYCARE (GROUP I-4)	35 SF	664 SF	19	I-4
111	INFANT/PRE-TODDLER ACTIVITY RM 01	DAYCARE (GROUP I-4)	35 SF	631 SF	19	I-4
115	INFANT/PRE-TODDLER ACTIVITY RM 02	DAYCARE (GROUP I-4)	35 SF	652 SF	19	I-4
118	ACTIVE PLAYROOM	DAYCARE (GROUP I-4)	35 SF	1162 SF	34	I-4
122	OUTREACH/TRANSITIONAL CARE ACTIVITY RM	DAYCARE (GROUP I-4)	35 SF	1071 SF	31	I-4
126	PRESCHOOL/PRE-K ACTIVITY RM 03	DAYCARE (GROUP I-4)	35 SF	1070 SF	31	I-4
130	PRESCHOOL/PRE-K ACTIVITY RM 02	DAYCARE (GROUP I-4)	35 SF	1079 SF	31	I-4
132	PRESCHOOL/PRE-K ACTIVITY RM 01	DAYCARE (GROUP I-4)	35 SF	1078 SF	31	I-4
120	KITCHEN	KITCHEN	100 SF	914 SF	10	B
106	JANITOR CLOSET	MECHANICAL & EQUIP USE	500 SF	46 SF	1	S-1
108	COMMUNICATIONS	MECHANICAL & EQUIP USE	300 SF	116 SF	1	B
110	LAUNDRY	MECHANICAL & EQUIP USE	300 SF	97 SF	1	B
112	RECYCLE RM	MECHANICAL & EQUIP USE	300 SF	32 SF	1	B
114	MECHANICAL	MECHANICAL & EQUIP USE	300 SF	756 SF	3	B
117	CCTV EQUIPMENT	MECHANICAL & EQUIP USE	500 SF	59 SF	1	S-1
127	ELECTRICAL	MECHANICAL & EQUIP USE	500 SF	113 SF	1	S-1
002C	STROLLER/ CAR SEAT STORAGE	STORAGE	500 SF	38 SF	1	S-1
003A	BUGGY STORAGE	STORAGE	500 SF	42 SF	1	S-1
004A	STORAGE	STORAGE	500 SF	30 SF	1	S-1
101A	STORAGE	STORAGE	500 SF	26 SF	1	S-1
105B	STORAGE	STORAGE	500 SF	46 SF	1	S-1
109B	STORAGE	STORAGE	500 SF	49 SF	1	S-1
111B	STORAGE	STORAGE	500 SF	54 SF	1	S-1
115B	STORAGE	STORAGE	500 SF	46 SF	1	S-1
118B	STORAGE	STORAGE	500 SF	60 SF	1	S-1
119	EXT STORAGE	STORAGE	500 SF	49 SF	1	S-1
121	EXT STORAGE	STORAGE	500 SF	42 SF	1	S-1
122B	STORAGE	STORAGE	500 SF	59 SF	1	S-1
123	EXT STORAGE	STORAGE	500 SF	42 SF	1	S-1
124	CENTRAL STORAGE	STORAGE	500 SF	92 SF	1	S-1
126B	STORAGE	STORAGE	500 SF	51 SF	1	S-1
130B	STORAGE	STORAGE	500 SF	44 SF	1	S-1
132B	STORAGE	STORAGE	500 SF	53 SF	1	S-1
134	EXT STORAGE	STORAGE	500 SF	42 SF	1	S-1
136	EXT STORAGE	STORAGE	500 SF	41 SF	1	S-1
: 51				14405 SF	320	

US Army Corps of Engineers ®

MARK	DESCRIPTION	DATE

PLOT DATE: 9/30/2025 12:42:03 AM FILE LOCATION: R:\dms29778\FH-CDC-DMM-A.rvt

ISSUE DATE: AUGUST 29, 2025
SOLICITATION NO.: W912DS24F0031
CONTRACT NO.: W912DS15D0007

DESIGNED BY: JKIM
DRAWN BY: JKIM
CHECKED BY: CWK
SUBMITTED BY:
SIZE: ANSI D

US ARMY CORPS OF ENGINEERS
NEW YORK DISTRICT
26 FEDERAL PLAZA, NEW YORK, NY 10278

CHILD DEVELOPMENT CENTER
USAG FORT HAMILTON, NEW YORK
PROJECT NO. 75662

LIFE SAFETY CODES

SHEET ID

GI002

WHITE AVE

EXIT TO PUBLIC WAY

Playground B
P-02
5965 SF

Playground C
P-03
7548 SF

EXIT DOOR 34" 170 10

EXIT DOOR 34" 170 16

EXIT DOOR 34" 170 60

EXIT DOOR 64" 426 72

INFANT/PRE-TODDLER ACTIVITY RM 01
111
631 SF
OCC:19

INFANT/PRE-TODDLER ACTIVITY RM 02
115
652 SF
OCC:19

INFANT/PRE-TODDLER ACTIVITY RM 03
109
664 SF
OCC:19

INFANT/PRE-TODDLER ACTIVITY RM 04
105
660 SF
OCC:19

PRESCHOOL/PRE-K ACTIVITY RM 01
132
1078 SF
OCC:31

PRESCHOOL/PRE-K ACTIVITY RM 02
130
1079 SF
OCC:31

PRESCHOOL/PRE-K ACTIVITY RM 03
126
1070 SF
OCC:31

OUTREACH/TRANSITIONAL CARE ACTIVITY RM
122
1071 SF
OCC:31

CCTV EQUIPMENT
117
59 SF
OCC:1

CORRIDOR
003
1823 SF
OCC:13

ACTIVE PLAYROOM
118
1162 SF
OCC:34

NURSING MOTHERS RM
107
OCC:1

STAFF LOUNGE
103
284 SF
OCC:10

TRAINING RM
101
247 SF
OCC:13

STROLLER/ CAR SEAT STORAGE
002C
38 SF
OCC:1

VESTIBULE
001
84 SF
OCC:1

WAITING AREA
002
106 SF
OCC:1

RECEPTION
005
91 SF
OCC:1

ISOLATION AREA
005A
55 SF
OCC:1

ISO TOILET
005B
42 SF
OCC:1

JANITOR CLOSET
106
46 SF
OCC:1

COMMUNICATIONS
108
116 SF
OCC:1

OPEN OFFICE AREA
004
146 SF
OCC:1

ASSISTANT DIRECTORS OFFICE
104
88 SF
OCC:1

DIRECTORS OFFICE
102
139 SF
OCC:1

PUBLIC TOILET
002B
47 SF
OCC:1

STORAGE
004A
30 SF
OCC:1

ELECTRICAL
127
113 SF
OCC:1

FMCU
003
1823 SF
OCC:13

RECYCLE RM
112
32 SF
OCC:1

LAUNDRY
110
97 SF
OCC:1

MECHANICAL
114
756 SF
OCC:2

KITCHEN
120
914 SF
OCC:10

CENTRAL STORAGE
124
92 SF
OCC:1

EXT STORAGE
121 42 SF OCC:1
123 42 SF OCC:1
134 42 SF OCC:1
136 41 SF OCC:1

STORAGE
110B 54 SF OCC:1
115B 46 SF OCC:1
132B 53 SF OCC:1
126B 51 SF OCC:1
130B 44 SF OCC:1
122B 59 SF OCC:1
105B 46 SF OCC:1
109B 49 SF OCC:1
119 49 SF OCC:1
118B 60 SF OCC:1

TOILET 01
113
48 SF
OCC:1

TOILET 02
128
51 SF
OCC:1

FE-A

FE/ AED/ LOCK

DIAGONAL DISTANCE ACROSS FLOOR AREA 226' - 2 1/4"

DISTANCE BETWEEN EXITS 84' - 6 1/4" (MIN. 76'-0" REQD)

CP: 13'-06" MAX: 100'-0"

CP: 15'-00" MAX: 100'-0"

CP: 16'-01"

CP: 17'-06" MAX: 100'-0"

CP: 22'-00" MAX: 100'-0"

CP: 23'-10" MAX: 100'-0"

CP: 34'-00" MAX: 100'-0"

CP: 37'-08" MAX: 100'-0"

CP: 14'-10" MAX: 100'-0"

CP: 17'-00" MAX: 100'-0"

CP: 14'-0" MAX: 100'-0"

TYP. TRAVEL DISTANCE: 64'-0"

TYPE K FIRE EXTINGUISHER

ABC FIRE EXTINGUISHER

MAIN ENTRANCE FIRE DEPT ACCESS

MECHANICAL YARD

Playground A (Infant)
P-01
3658 SF

IMAGINARY 10'-0" LOT LINE

10'-0"

SEE CIVIL DWGS FOR ACCURATE LOCATION

FH

APPROX. 175'-0"

0 8' 16' 32'

SCALE: 3/32" = 1'-0"

PLAN NORTH

1 LIFE SAFETY PLAN
3/32" = 1'-0"

OCCUPANT LOAD TABLE

NFPA 101 TABLE 7.3.1.2

OCCUPANCY USE	OCCUPANT LOAD FACTOR
BUSINESS	1 PERSON / 150 GROSS
BUSINESS COLLABORATION<450 SF	1 PERSON/ 15 SF NET
DAYCARE	1 PERSON/ 35 SF NET
KITCHEN	1 PERSON / 100 SF NET
MECHANICAL & EQUIP USE	1 PERSON/ 500 SF GROSS
STORAGE	1 PERSON / 500 SF GROSS

OCCUPANCY CLASS (IBC, NFPA)

- BUSINESS (GROUP B)
- BUSINESS COLLABORATION <450SF (GROUP A)
- DAYCARE (GROUP I-4)
- KITCHEN
- MECHANICAL & EQUIP USE
- STORAGE

LEGEND

- NO FIRE RATING
- 1 HR FIRE RATING
- SMOKE PARTITION
- EXIT DOOR 32" 000 000 — EGRESS CAPACITY; DOOR CLEAR WIDTH; # OF OCCUPANTS EXITING DOOR CLEAR WIDTH
- 0 — EXIT TAG (# OF OCCUPANTS EXITING)
- FE — FIRE EXTINGUISHER
- FE-x — FIRE EXTINGUISHER IN CABINET (A - WATER, B - DRY CHEMICAL, C - GASEOUS)
- AED — AED FULLY RECESSED IN CABINET
- BUILDING EXIT
- EXIT TO PUBLIC WAY
- COMMON PATH OF TRAVEL (CP)
- 2-WAY OPTIONAL DIRECTION OF TRAVEL

US Army Corps of Engineers ®

MARK	DESCRIPTION	DATE

PLOT DATE: 10/23/2025 12:12:12 PM FILE LOCATION: R:\dms\29778\FH-CDC-DMM-A.rvt

DESIGNED BY: JK
DRAWN BY: JK
CHECKED BY: CHECKER
SUBMITTED BY:

ISSUE DATE: AUGUST 29, 2025
SOLICITATION NO.: W912DS24F0031
CONTRACT NO.: W912DS15D0007
SIZE: ANSI D

US ARMY CORPS OF ENGINEERS
NEW YORK DISTRICT
26 FEDERAL PLAZA, NEW YORK, NY 10278

CHILD DEVELOPMENT CENTER
USAG FORT HAMILTON, NEW YORK
PROJECT NO. 75662

LIFE SAFETY PLAN

SHEET ID
GI101

parratt wolff inc

TEST BORING LOG

5879 Fisher Road
East Syracuse, NY 13057

PROJECT: **Fort Hamilton CDC**

LOCATION: **Fort Hamilton, New York**

HOLE NO.: **B-1**
JOB NUMBER: **23057A**
SURF. EL.:

GROUNDWATER DEPTH WHILE DRILLING: **None**

DATE STARTED: **05/02/23**
DATE COMPLETED: **05/03/23**

BEFORE CASING REMOVED: N - NO. OF BLOWS TO DRIVE SAMPLER 12" W/140# AUTOMATIC HAMMER FALLING 30" - ASTM D-1586 STANDARD PENETRATION TEST

AFTER CASING REMOVED: C - NO. OF BLOWS TO DRIVE CASING 12" W/ FALLING | # HAMMER "/ OR PERCENT CORE RECOVERY:

CASING TYPE: **HW FLUSH JOINT CASING**

SHEET 1 OF 1

DEPTH	SAMPLE DEPTH	SAMPLE NO.	Rec	SAMPLE DRIVE RECORD PER 6"	N	DESCRIPTION OF MATERIAL	STRATA CHANGE DEPTH
	0.0'-	S-1	1.7'	3 3		STONE/GRAVEL (fill)	0.5'
	2.0'			6 8	9	Brown moist loose fine to coarse SAND, little fine gravel, little silt, trace brick (fill)	
	2.0'-	S-2	0.1'	50/0.1'			2.0'
	2.1'					BRICK (fill)	4.0'
5.0	4.0'-	S-3	1.8'	11 11		Red-brown moist medium dense fine to coarse SAND and SILT, little fine gravel	
	6.0'			14 10	25		
	6.0'-	S-4	1.4'	8 7			
	8.0'			10 10	17		8.0'
	8.0'-	S-5	1.9'	7 11		Dark brown-black moist very stiff SILT	
10.0	10.0'			12 14	23	and fine to coarse SAND, little fine gravel	9.0'
	10.0'-	S-6	1.9'	15 21		Red-brown moist dense fine SAND and	
	12.0'			16 23	37	SILT, little fine gravel	
15.0							15.0'
	15.0'-	S-7	1.1'	26 30		Red-brown moist very dense fine to	
	17.0'			37 42	67	coarse SAND and fine to medium GRAVEL, some silt	
20.0							
	20.0'-	S-8	0.1'	30 42			
	21.1'			50/0.1'			23.0'
	23.0'-	S-9	1.7'	17 21		Red-brown moist very dense fine to coarse	
25.0	25.0'			46 27	67	SAND, some silt, little fine gravel	
						Bottom of Boring	25.0'
30.0							
35.0							
40.0							

parratt wolff inc

TEST BORING LOG

5879 Fisher Road
East Syracuse, NY 13057

PROJECT: **Fort Hamilton CDC**

LOCATION: **Fort Hamilton, New York**

HOLE NO.: **B-2**
JOB NUMBER: **23057A**
SURF. EL.:

GROUNDWATER DEPTH WHILE DRILLING: **None**

DATE STARTED: **05/02/23**
DATE COMPLETED: **05/03/23**

BEFORE CASING REMOVED: N - NO. OF BLOWS TO DRIVE SAMPLER 12" W/140# AUTOMATIC HAMMER FALLING 30" - ASTM D-1586 STANDARD PENETRATION TEST

AFTER CASING REMOVED: C - NO. OF BLOWS TO DRIVE CASING 12" W/ FALLING | # HAMMER "/ OR PERCENT CORE RECOVERY:

CASING TYPE: **HW FLUSH JOINT CASING**

SHEET 1 OF 1

DEPTH	SAMPLE DEPTH	SAMPLE NO.	Rec	SAMPLE DRIVE RECORD PER 6"	N	DESCRIPTION OF MATERIAL	STRATA CHANGE DEPTH
	0.0'-	S-1	1.2'	4 2		STONE/GRAVEL (fill)	0.3'
	2.0'			2 5	4	Brown moist loose fine SAND, little silt,	
	2.0'-	S-2	1.7'	2 3		trace fine gravel (fill)	2.0'
	4.0'			3 3	6	Brown moist medium stiff SILT, trace	
5.0	4.0'-	S-3	1.2'	7 10		fine sand	4.0'
	6.0'			10 11	20	Red-brown moist medium dense fine to	
	6.0'-	S-4	1.9'	10 11		coarse SAND, some fine to medium	
	8.0'			7 9	18	gravel, little silt	6.0'
	8.0'-	S-5	1.7'	2 4		Red-brown moist loose to medium dense	
10.0	10.0'			5 7	9	fine SAND and SILT	
	10.0'-	S-6	1.5'	10 9			
	12.0'			12 16	21		
15.0							15.0'
	15.0'-	S-7	1.5'	5 10		Red-brown moist medium dense to very	
	17.0'			11 14	21	dense fine SAND, trace to little silt,	
20.0						trace to little fine gravel	
	20.0'-	S-8	1.7'	20 31			
	22.0'			55 43	86		
	23.0'-	S-9	1.0'	6 13			
25.0	25.0'			17 15	30		
						Bottom of Boring	25.0'
30.0							
35.0							
40.0							

parratt wolff inc

TEST BORING LOG

5879 Fisher Road
East Syracuse, NY 13057

PROJECT: **Fort Hamilton CDC**

LOCATION: **Fort Hamilton, New York**

HOLE NO.: **B-3**
JOB NUMBER: **23057A**
SURF. EL.:

GROUNDWATER DEPTH WHILE DRILLING: **None**

DATE STARTED: **05/02/23**
DATE COMPLETED: **05/02/23**

BEFORE CASING REMOVED: N - NO. OF BLOWS TO DRIVE SAMPLER 12" W/140# AUTOMATIC HAMMER FALLING 30" - ASTM D-1586 STANDARD PENETRATION TEST

AFTER CASING REMOVED: C - NO. OF BLOWS TO DRIVE CASING 12" W/ FALLING | # HAMMER "/ OR PERCENT CORE RECOVERY:

CASING TYPE: **HW FLUSH JOINT CASING**

SHEET 1 OF 1

DEPTH	SAMPLE DEPTH	SAMPLE NO.	Rec	SAMPLE DRIVE RECORD PER 6"	N	DESCRIPTION OF MATERIAL	STRATA CHANGE DEPTH
	0.0'-	S-1	1.8'	2 2		TOPSOIL (fill)	0.5'
	2.0'			5 6	7	Brown moist loose to medium dense fine	
	2.0'-	S-2	0.8'	8 6		to coarse SAND, little fine to coarse	
	4.0'			6 9	12	gravel, little silt (fill)	
5.0	4.0'-	S-3	0.5'	6 5			
	6.0'			5 6	10		6.0'
	6.0'-	S-4	0.1'	50/0.4'		Tan very dense fine to coarse GRAVEL (fill)	
	6.4'					Bottom of Boring	6.4'
10.0						NOTE: Boring terminated at refusal on possible boulder (0.4' of rock chips in split spoon)	
15.0							
20.0							
25.0							
30.0							
35.0							
40.0							

parratt wolff inc

TEST BORING LOG

5879 Fisher Road
East Syracuse, NY 13057

PROJECT: **Fort Hamilton CDC**

LOCATION: **Fort Hamilton, New York**

HOLE NO.: **B-4**
JOB NUMBER: **23057A**
SURF. EL.:

GROUNDWATER DEPTH WHILE DRILLING: **None**

DATE STARTED: **05/02/23**
DATE COMPLETED: **05/02/23**

BEFORE CASING REMOVED: N - NO. OF BLOWS TO DRIVE SAMPLER 12" W/140# AUTOMATIC HAMMER FALLING 30" - ASTM D-1586 STANDARD PENETRATION TEST

AFTER CASING REMOVED: C - NO. OF BLOWS TO DRIVE CASING 12" W/ FALLING | # HAMMER "/ OR PERCENT CORE RECOVERY:

CASING TYPE: **HW FLUSH JOINT CASING**

SHEET 1 OF 1

DEPTH	SAMPLE DEPTH	SAMPLE NO.	Rec	SAMPLE DRIVE RECORD PER 6"	N	DESCRIPTION OF MATERIAL	STRATA CHANGE DEPTH
	0.0'-	S-1	1.2'	7 6		STONE/GRAVEL (fill)	0.5'
	2.0'			6 5	12	Brown moist medium dense fine to coarse	
	2.0'-	S-2	1.5'	3 3		SAND, little fine gravel, little silt (fill)	2.0'
	4.0'			15 16	19	Red-brown moist medium dense fine to	
5.0	4.0'-	S-3	1.7'	11 6		coarse SAND and SILT, trace fine gravel	4.0'
	8.0'			6 11	12	Red-brown moist medium dense fine to	
	6.0'-	S-4	1.4'	10 11		coarse SAND, little fine gravel, little silt	
	8.0'			11 14	22		
	8.0'-	S-5	1.3'	10 11			
10.0	10.0'			9 10	20		10.0'
	10.0'-	S-6	1.8'	10 11		Red-brown moist dense fine SAND, some	
	12.0'			20 24	31	silt	11.5'
						Red-brown moist very dense fine to	
15.0	14.6'-	S-7	No	50/0.2'		coarse SAND and fine to coarse GRAVEL,	
	14.2'		Rec			trace to some silt	
	16.9'-	S-8	1.0'	21 31			
	17.2'			50/0.2'			
20.0							20.0'
	20.0'-	S-9	1.2'	4 26		Red-brown moist dense to very dense	
	22.0'			31 27	57	fine to coarse SAND, some silt, little fine	
						to medium gravel	
	23.0'-	S-10	1.3'	23 20			
25.0	25.0'			17 24	37		
						Bottom of Boring	25.0'
30.0							
35.0							
40.0							

parratt wolff inc

TEST BORING LOG

5879 Fisher Road
East Syracuse, NY 13057

PROJECT: **Fort Hamilton CDC**

LOCATION: **Fort Hamilton, New York**

HOLE NO.: **B-5**
JOB NUMBER: **23057A**
SURF. EL.:

GROUNDWATER DEPTH WHILE DRILLING: **None**

DATE STARTED: **05/04/23**
DATE COMPLETED: **05/04/23**

BEFORE CASING REMOVED: N - NO. OF BLOWS TO DRIVE SAMPLER 12" W/140# AUTOMATIC HAMMER FALLING 30" - ASTM D-1586 STANDARD PENETRATION TEST

AFTER CASING REMOVED: C - NO. OF BLOWS TO DRIVE CASING 12" W/ FALLING | # HAMMER "/ OR PERCENT CORE RECOVERY:

CASING TYPE: **HW FLUSH JOINT CASING**

SHEET 1 OF 3

DEPTH	SAMPLE DEPTH	SAMPLE NO.	Rec	SAMPLE DRIVE RECORD PER 6"	N	DESCRIPTION OF MATERIAL	STRATA CHANGE DEPTH
	0.0'-	S-1	1.3'	4 7		STONE/GRAVEL (fill)	0.5'
	2.0'			7 8	14	Brown moist medium dense to very dense	
	2.0'-	S-2	1.3'	12 23		fine to coarse SAND, little fine gravel,	
	4.0'			37 50/0.1'	60	trace to little silt (fill)	
5.0	4.0'-	S-3	2.0'	25 17			
	6.0'			14 14	31		
	6.0'-	S-4	1.5'	16 17			
	8.0'			12 11	29		
	8.0'-	S-5	1.4'	5 5			
10.0	10.0'			14 8	19		10.0'
	10.0'-	S-6	1.3'	4 3		Brown moist medium stiff SILT, little fine	
	12.0'			3 4	6	to coarse sand, trace fine gravel	
15.0							15.0'
	15.0'-	S-7	2.0'	6 7		Brown-gray moist very stiff SILT, little	
	17.0'			11 7	18	clay, trace fine sand	
20.0							20.0'
	20.0'-	S-8	2.0'	11 13		Red-brown moist medium dense fine to	
	22.0'			13 13	26	medium SAND, little silt, trace fine	
25.0						gravel	
	25.0'-	S-9	2.0'	7 13			
	27.0'			13 16	26		
30.0							30.0'
	30.0'-	S-10	1.3'	15 15		Red-brown moist dense fine to coarse	
	32.0'			17 17	32	SAND, little fine gravel, little to some	
35.0						silt	
	35.0'-	S-11	1.4'	13 16			
	37.0'			14 15	30		
40.0							

parratt wolff inc

TEST BORING LOG

5879 Fisher Road
East Syracuse, NY 13057

PROJECT: **Fort Hamilton CDC**

LOCATION: **Fort Hamilton, New York**

HOLE NO.: **B-5**
JOB NUMBER: **23057A**
SURF. EL.:

GROUNDWATER DEPTH WHILE DRILLING: **None**

DATE STARTED: **05/04/23**
DATE COMPLETED: **05/04/23**

BEFORE CASING REMOVED: N - NO. OF BLOWS TO DRIVE SAMPLER 12" W/140# AUTOMATIC HAMMER FALLING 30" - ASTM D-1586 STANDARD PENETRATION TEST

AFTER CASING REMOVED: C - NO. OF BLOWS TO DRIVE CASING 12" W/ FALLING | # HAMMER "/ OR PERCENT CORE RECOVERY:

CASING TYPE: **HW FLUSH JOINT CASING**

SHEET 2 OF 3

DEPTH	SAMPLE DEPTH	SAMPLE NO.	Rec	SAMPLE DRIVE RECORD PER 6"	N	DESCRIPTION OF MATERIAL	STRATA CHANGE DEPTH
	40.0'-	S-12	1.6'	7 8		Red-brown moist medium dense to dense	
	42.0'			29 30	37	fine to coarse SAND, some fine to	
45.0						medium gravel, little silt	
	45.0'-	S-13	0.8'	9 8			
	47.0'			12 30	20		
50.0							
	50.0'-	S-14	1.5'	9 15			
	52.0'			14 18	29		
55.0							
	55.0'-	S-15	0.3'	50/0.3'			
	55.3'						
60.0							60.0'
	60.0'-	S-16	1.6'	19 26		Red-brown moist dense to very dense	
	62.0'			26 36	52	fine to medium SAND, trace silt	
65.0							
	65.0'-	S-17	0.1'	17 22			
	67.0'			28 27	45		
70.0							
	70.0'-	S-18	1.0'	14 22			
	72.0'			25 24	47		
75.0							
	75.0'-	S-19	1.3'	31 40			
	77.0'			40 33	80		
80.0							

parratt wolff inc

TEST BORING LOG

5879 Fisher Road
East Syracuse, NY 13057

PROJECT: **Fort Hamilton CDC**

LOCATION: **Fort Hamilton, New York**

HOLE NO.: **B-5**
JOB NUMBER: **23057A**
SURF. EL.:

GROUNDWATER DEPTH WHILE DRILLING: **None**

DATE STARTED: **05/04/23**
DATE COMPLETED: **05/04/23**

BEFORE CASING REMOVED: N - NO. OF BLOWS TO DRIVE SAMPLER 12" W/140# AUTOMATIC HAMMER FALLING 30" - ASTM D-1586 STANDARD PENETRATION TEST

AFTER CASING REMOVED: C - NO. OF BLOWS TO DRIVE CASING 12" W/ FALLING | # HAMMER "/ OR PERCENT CORE RECOVERY:

CASING TYPE: **HW FLUSH JOINT CASING**

SHEET 3 OF 3

DEPTH	SAMPLE DEPTH	SAMPLE NO.	Rec	SAMPLE DRIVE RECORD PER 6"	N	DESCRIPTION OF MATERIAL	STRATA CHANGE DEPTH
	80.0'-	S-20	1.3'	22 30		Red-brown moist very dense fine SAND,	
	82.0'			30 42	60	little silt	
85.0							
	85.0'-	S-21	1.5'	38 42			
	87.0'			41 60	83		
90.0							
	90.0'-	S-22	1.7'	26 36			
	92.0'			40 43	76		
95.0							95.0'
	95.0'-	S-23	1.4'	27 36		Brown moist very dense fine to medium	
	96.4'			50/0.4'		SAND, trace silt	
100.0							
	100.0'-	S-24	1.1'	27 28			
	102.0'			41 42	69		
105.0						Bottom of Boring	102.0'
110.0						Note: Installed 2" PVC piezometer 2" PVC 10 slot screen 99.5' to 89.5' 2" PVC riser 89.5' to grade #0 sand 102.0' to 87.5' bentonite chips 87.5' to 84.5' Flush mount well cover	
115.0							
120.0							

parratt wolff inc

TEST BORING LOG

5879 Fisher Road
East Syracuse, NY 13057

PROJECT: **Fort Hamilton CDC**

LOCATION: **Fort Hamilton, New York**

HOLE NO.: **B-6**
JOB NUMBER: **23057A**
SURF. EL.:

GROUNDWATER DEPTH WHILE DRILLING: **None**

DATE STARTED: **05/04/23**
DATE COMPLETED: **05/04/23**

BEFORE CASING REMOVED: N - NO. OF BLOWS TO DRIVE SAMPLER 12" W/140# AUTOMATIC HAMMER FALLING 30" - ASTM D-1586 STANDARD PENETRATION TEST

AFTER CASING REMOVED: C - NO. OF BLOWS TO DRIVE CASING 12" W/ FALLING | # HAMMER "/ OR PERCENT CORE RECOVERY:

CASING TYPE: **HW FLUSH JOINT CASING**

SHEET 1 OF 1

DEPTH	SAMPLE DEPTH	SAMPLE NO.	Rec	SAMPLE DRIVE RECORD PER 6"	N	DESCRIPTION OF MATERIAL	STRATA CHANGE DEPTH
	0.0'-	S-1	1.3'	2 8		Brown moist medium dense fine to coarse	
	2.0'			10 7	18	SAND, little silt, trace fine gravel (fill)	2.0'
	2.0'-	S-2	1.4'	5 5		Brown moist loose fine to medium SAND	
	4.0'			4 5	9	and SILT	4.0'
5.0	4.0'-	S-3	0.6'	12 5		Brown moist stiff SILT, trace fine to coarse	
	6.0'			4 5	9	sand, trace medium gravel	
	6.0'-	S-4	2.0'	12 13			7.0'
	8.0'			14 13	27	Brown-gray moist stiff to very stiff SILT,	
	8.0'-	S-5	1.8'	7 7		trace clay, trace fine sand	
10.0	10.0'			5 4	12		
	10.0'-	S-6	1.8'	3 6			
	12.0'			12 14	18		
15.0							15.0'
	15.0'-	S-7	1.1'	28 25		Brown-gray moist very dense fine to	
	17.0'			31 42	56	coarse SAND, some fine to coarse gravel,	
						trace silt	19.0'
	18.9'-	S-8	1.8'	12 12		Red-brown moist medium dense fine	
20.0	20.0'			13 13	25	SAND, some silt, trace coarse sand	
						Bottom of Boring	20.0'
25.0							
30.0							
35.0							
40.0							

US Army Corps of Engineers ®

MARK	DESCRIPTION	DATE

FILE LOCATION: File Path

PLOT DATE: 8/28/2025 4:39:00 PM

DESIGNED BY:
LAYERS
DRAWN BY:
LAYERS
CHECKED BY:
CHECKED BY:
SUBMITTED BY:
SUBMITTED_BY:
SIZE:
ANSI D

ISSUE DATE:
AUGUST 29, 2025
SOLICITATION NO.:
W912DS23F0031
CONTRACT NO.:
W912DS19D0007

US ARMY CORPS OF ENGINEERS
NEW YORK DISTRICT
26 FEDERAL PLAZA, NEW YORK, NY 10728

CHILD DEVELOPMENT CENTER
USAG FORT HAMILTON NEW YORK
Project NO: 75562

SUBSURFACE INVESTIGATION
BORING RECORDS

SHEET ID

B-101

PROJECT STATUS

TEST BORING LOG

parratt wolff inc

5879 Fisher Road
East Syracuse, NY 13057

PROJECT: **Fort Hamilton CDC**

LOCATION: **Fort Hamilton, New York**

HOLE NO.: **B-7**
JOB NUMBER: **23057A**
SURF. EL.:

GROUNDWATER DEPTH WHILE DRILLING: **None**

DATE STARTED: **05/03/23**
DATE COMPLETED: **05/04/23**

BEFORE CASING REMOVED:

N - NO. OF BLOWS TO DRIVE SAMPLER 12" W/ 140# AUTOMATIC HAMMER FALLING 30" - ASTM D-1586 STANDARD PENETRATION TEST

AFTER CASING REMOVED:

C - NO. OF BLOWS TO DRIVE CASING 12" W/ # HAMMER FALLING
"I" OR PERCENT CORE RECOVERY:

CASING TYPE: **HW FLUSH JOINT CASING**

SHEET **1 OF 1**

DEPTH	SAMPLE DEPTH	SAMPLE NO.	Rec	SAMPLE DRIVE RECORD PER 6"		N	DESCRIPTION OF MATERIAL	STRATA CHANGE DEPTH
	0.0'-	S-1	1.4'	1	2		**TOPSOIL (fill)**	0.5'
	2.0'			2	3	5	**Red-brown medium stiff SILT, some fine to coarse sand, trace medium gravel**	
	2.0'-	S-2	1.2'	2	3			
	4.0'			3	2	6		
5.0	4.0'-	S-3	1.3'	1	1			5.0'
	6.0'			1	25	2	**Brown moist very loose fine to coarse SAND, trace medium gravel, trace silt**	
	6.0'-	S-4	1.5'	13	2			7.0'
	8.0'			3	3	5	**Brown moist soft SILT, little fine to coarse sand**	
	8.0'-	S-5	1.4'	18	20			8.0'
10.0	10.0'			14	14	34	**Brown moist dense fine to coarse SAND, little fine to medium gravel, trace silt**	
	10.0'-	S-6	2.0'	5	4			10.0'
	12.0'			4	3	8	**Gray moist stiff SILT, little fine sand**	
15.0								15.0'
	15.0'-	S-7	1.7'	5	7		**Red-brown moist dense fine to coarse SAND, some fine to coarse gravel, trace to little silt**	
	17.0'			23	16	39		
	18.0'-	S-8	1.7'	7	21			
20.0	20.0'			20	20	41		
							Bottom of Boring	20.0'
25.0								
30.0								
35.0								
40.0								

Test Pit Log

parratt wolff inc

5879 Fisher Road
East Syracuse, NY 13057

PROJECT: **Fort Hamilton CDC**

LOCATION: **Fort Hamilton, New York**

HOLE NO.: **TP-1**
JOB NUMBER: **23057A**

GROUNDWATER DEPTH WHILE CLEARING: **NONE**

DATE STARTED: **05/10/23**
DATE COMPLETED: **05/10/23**

GROUNDWATER DEPTH BEFORE BACKFILL:

TIME STARTED:

PIT DIMENSIONS:

TIME COMPLETED:

EQUIPMENT: **MINI-EXCAVATOR**

SHEET **1 OF 1**

DEPTH	SAMPLE DEPTH	SAMPLE NO.	DESCRIPTION OF MATERIAL	STRATA CHANGE DEPTH
			Light brown moist SAND and SILT, little gravel (fill)	1.0'
1.0				
			FILL; brick, cobble, concrete, intermixed with brown SAND, some silt	
2.0				
3.0				
4.0				
5.0			**Bottom of Test Pit**	4.5'
			Notes: Test pit terminated at 4.5 feet on top of apparent concrete slab	

Test Pit Log

parratt wolff inc

5879 Fisher Road
East Syracuse, NY 13057

PROJECT: **Fort Hamilton CDC**

LOCATION: **Fort Hamilton, New York**

HOLE NO.: **TP-2**
JOB NUMBER: **23057A**

GROUNDWATER DEPTH WHILE CLEARING: **NONE**

DATE STARTED: **05/10/23**
DATE COMPLETED: **05/10/23**

GROUNDWATER DEPTH BEFORE BACKFILL:

TIME STARTED:

PIT DIMENSIONS:

TIME COMPLETED:

EQUIPMENT: **MINI-EXCAVATOR**

SHEET **1 OF 1**

DEPTH	SAMPLE DEPTH	SAMPLE NO.	DESCRIPTION OF MATERIAL	STRATA CHANGE DEPTH
1.0			**Red SAND and SILT, some gravel, some brick, some cobble (fill)**	
2.0				
3.0			**Bottom of Test Pit**	2.5'
4.0				
5.0			**Notes: Test pit terminated at 2.5 feet on top of apparent concrete slab**	

Test Pit Log

parratt wolff inc

5879 Fisher Road
East Syracuse, NY 13057

PROJECT: **Fort Hamilton CDC**

LOCATION: **Fort Hamilton, New York**

HOLE NO.: **TP-3**
JOB NUMBER: **23057A**

GROUNDWATER DEPTH WHILE CLEARING: **NONE**

DATE STARTED: **05/10/23**
DATE COMPLETED: **05/10/23**

GROUNDWATER DEPTH BEFORE BACKFILL:

TIME STARTED:

PIT DIMENSIONS:

TIME COMPLETED:

EQUIPMENT: **MINI-EXCAVATOR**

SHEET **1 OF 1**

DEPTH	SAMPLE DEPTH	SAMPLE NO.	DESCRIPTION OF MATERIAL	STRATA CHANGE DEPTH
1.0			**Brown SILT, some sand, little gravel, little cobble, trace brick, trace concrete (fill)**	
2.0				
3.0				
4.0				
5.0			**Bottom of Test Pit**	5.0'
			Notes:	

Test Pit Log

parratt wolff inc

5879 Fisher Road
East Syracuse, NY 13057

PROJECT: **Fort Hamilton CDC**

LOCATION: **Fort Hamilton, New York**

HOLE NO.: **TP-4**
JOB NUMBER: **23057A**

GROUNDWATER DEPTH WHILE CLEARING: **NONE**

DATE STARTED: **05/10/23**
DATE COMPLETED: **05/10/23**

GROUNDWATER DEPTH BEFORE BACKFILL:

TIME STARTED:

PIT DIMENSIONS:

TIME COMPLETED:

EQUIPMENT: **MINI-EXCAVATOR**

SHEET **1 OF 1**

DEPTH	SAMPLE DEPTH	SAMPLE NO.	DESCRIPTION OF MATERIAL	STRATA CHANGE DEPTH
			TOPSOIL	1.0'
1.0				
			Light brown SAND, some silt, little gravel and cobble	
2.0				
3.0				
4.0				
5.0				
			Bottom of Test Pit	5.0'
			Notes:	

US Army Corps of Engineers ®

MARK	DESCRIPTION	DATE

PLOT DATE: 8/28/2025 4:40:00 PM FILE LOCATION: File Path

ISSUE DATE: AUGUST 29, 2025
SOLICITATION NO.: W912DS23F0031
CONTRACT NO.: W912DS19D0007

DESIGNED BY:
LAYERS
DRAWN BY: LA
CHECKED BY:
CHECKED BY:
SUBMITTED BY:
SUBMITTED_BY:
SIZE: ANSI D

US ARMY CORPS OF ENGINEERS
NEW YORK DISTRICT
26 FEDERAL PLAZA, NEW YORK, NY

CHILD DEVELOPMENT CENTER
USAG FORT HAMILTON, NEW YORK
PROJECT NO. 75562

SUBSURFACE INVESTIGATION
BORING RECORDS

SHEET ID

B-102

PROJECT STATUS

CONTROL POINT & BENCHMARK TABLE				
NO.	NORTHING	EASTING	ELEVATION	DESCRIPTION
1	162100.8740	976414.7350	38.98	TT IP CAP
2	161905.8850	976372.1220	38.92	TT IP CAP
3	161949.5740	976107.1170	34.30	TT IP CAP
4	162212.0730	976209.0660	35.36	TT MAG NAIL
51	162092.9460	976395.0820	39.43	BM 51 CHISELED SQ.
52	161872.8360	976233.4180	40.95	BM 52 CHISELED X
53	162191.6500	976184.0610	36.15	BM 53 MAG NAIL

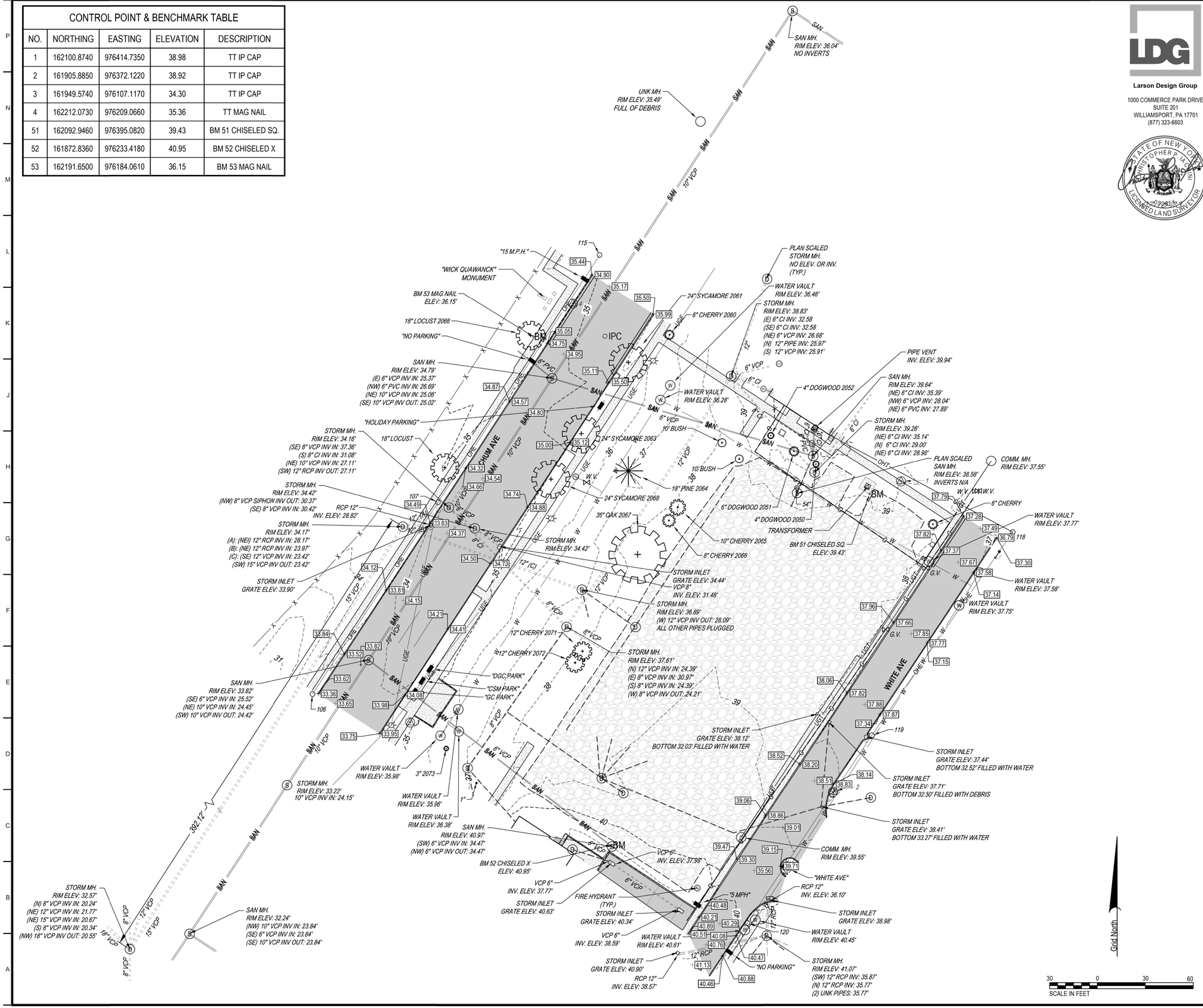

LDG

Larson Design Group

1000 COMMERCE PARK DRIVE
SUITE 201
WILLIAMSPORT, PA 17701
(877) 323-6603

STATE OF NEW YORK
CHRISTOPHER P. IACONO
220954
LICENSED LAND SURVEYOR

LEGEND

FEATURE ANNOTATION	*FEATURES TEXT*
ZONING BOUNDARY	
PROPERTY LINE	
RIGHT-OF-WAY LINE	
EASEMENT LINE	
CONTOUR LINE	100
CENTER LINE OF ROAD	
BUILDING SETBACK	
BUILDING LINE	
FENCE LINE	X X X
EDGE OF PAVEMENT	
GRAVEL	
CONCRETE CURB	
GUIDE RAIL	
CONCRETE SIDEWALK	
RETAINING WALL	
SIGN (SINGLE POST / DOUBLE POST)	
UTILITY POLE	
EDGE OF WATER	
EDGE OF WOODS / TREELINE	
EDGE OF WETLAND	
STORM SEWER, MANHOLE, AND INLET	MH
SANITARY SEWER AND MANHOLE	MH SAN
SANITARY SEWER FORCE MAIN	FM
WATER MAIN AND VALVE	WV W W
GAS MAIN AND VALVE	GV G
UNDERGROUND PRIMARY ELECTRIC LINE	UGE
OVERHEAD PRIMARY ELECTRIC LINE	OHE
UNDERGROUND TELEPHONE AND COMMUNICATION LINE	UGT
OVERHEAD TELEPHONE AND COMMUNICATION LINE	OHT
PLAN SCALED UTILITY	
BITUMINOUS PAVEMENT	
GRAVEL	
SPOT ELEVATION	+ 37.00

NOTE: ANY UTILITY SHOWN WITH A DASHED RED LINE UNDER NEATH IT HAS BEEN SCALED IN FROM CLIENT PROVIDED GIS UTILITY PLANS. LABELS WILL ALSO STATE WHICH FEATURE HAS BEEN SCALED IN. THESE UTILITIES WERE NOT OBSERVED BY A FIELD SURVEY AND ARE CONSIDERED APPROXIMATE. AN EXCAVATION 811 CALL WILL NEED TO BE MADE PRIOR TO ANY WORK ON THE SITE SHOWN. LDG COULD NOT VERIFY ANY UNDER GROUND UTILITIES SHOWN ON SITE AS NO UTILITIES WERE MARKED OUT DURING THE SITE SURVEY AND THE SITE IS CLEAR OF UTILITIES ACCORDING TO NY 811 TICKET NUMBER 231170376. LDG IS NOT LIABLE FOR ANY UNDERGROUND UTILITY LOCATIONS SHOWN ON THIS PLAN AS THERE WAS NO WAY TO VERIFY ANY OF THEM.

GENERAL NOTES:

A. TOPOGRAPHIC FIELD SURVEY PERFORMED ON SITE ON APRIL 25-27, 2023.

B. HORIZONTAL DATUM SHOWN HEREON BASED ON NAD83 NEW YORK STATE PLANES, LONG ISLAND, US FOOT

C. VERTICAL DATUM SHOWN HEREON BASED ON NAVD 88 ESTABLISHED BY GPS

D. BEARINGS SHOWN HEREON ARE BASED ON GRID NORTH NEW YORK LONG ISLAND ZONE STATE PLANE NAD83 SURVEY FOOT COORDINATE SYSTEM AS DETERMINED BY GPS.

E. TREES ARE LABELED BY SIZE, TYPE, AND NUMBERED TAG THAT WAS ON THE TREE. IF NO NUMBER IS LISTED AFTER THE TYPE, THERE WAS NO VISIBLE TAG ON THE TREE.

F. UTILITIES ARE SHOWN BASED ON FIELD GATHERED AND PROVIDED PLAN DATA. CONTRACTOR TO VERIFY ALL UTILITY LOCATIONS WITH OWNER(S) PRIOR TO CONSTRUCTION.

US Army Corps of Engineers ®

MARK	DESCRIPTION	DATE

DESIGNED BY: KW
DRAWN BY: KW
CHECKED BY:
SUBMITTED BY:
ISSUE DATE: July 2025
SOLICITATION NO.: W912DS23F0031
CONTRACT NO.: W912DS19D0007
SIZE: ANSI D

US ARMY CORPS OF ENGINEERS
NEW YORK DISTRICT
26 FEDERAL PLAZA
NEW YORK, NY 10278

CHILD DEVELOPMENT CENTER
USAG FORT HAMILTON, NEW YORK
PROJECT #75662

EXISTING CONDITIONS

SHEET ID
C-101

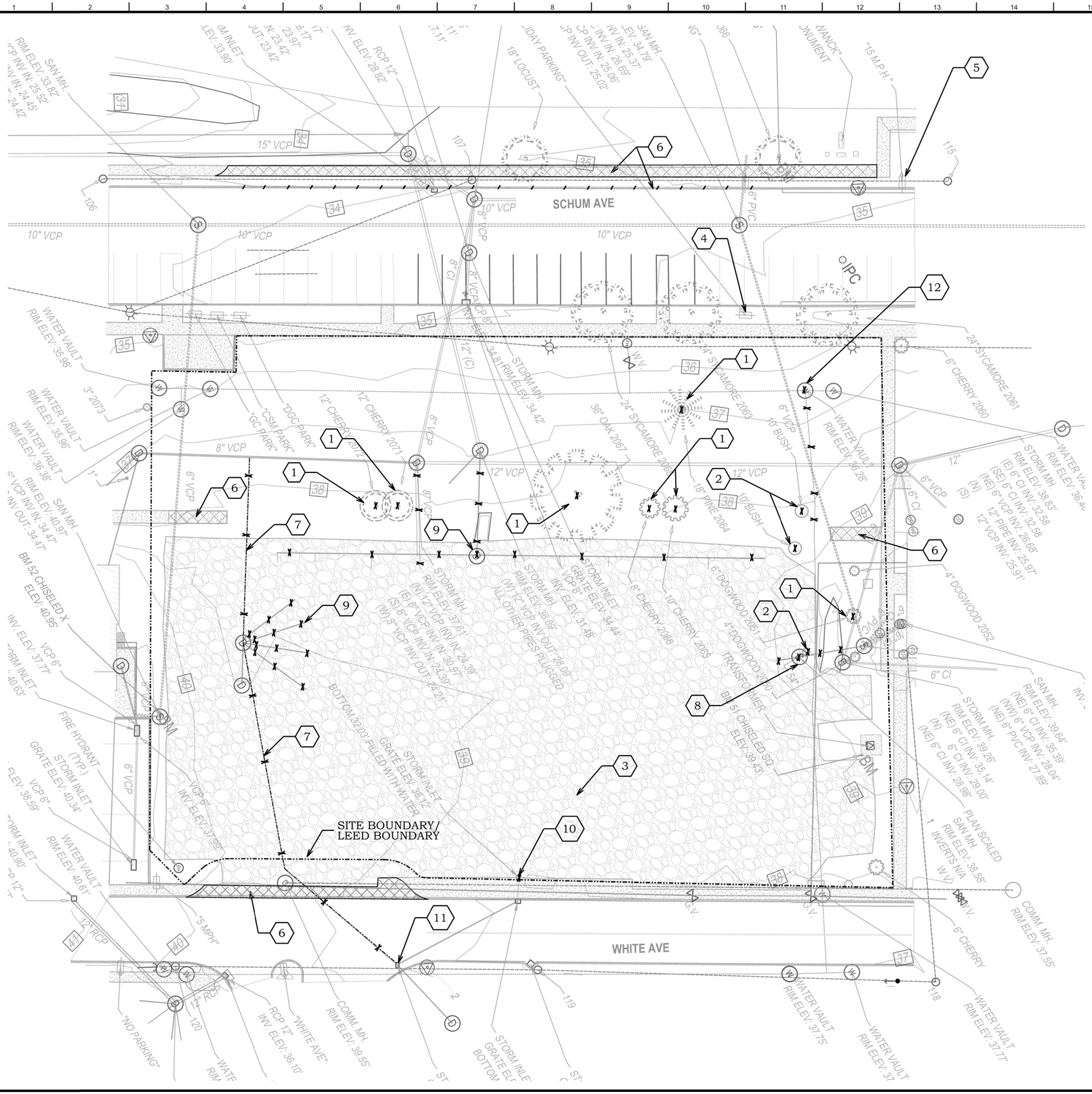

DEMOLITION KEYNOTES

1 - TREES TO BE REMOVED (7)
2 - BUSHES TO BE REMOVED (3)
3 - GRAVEL PARKING AREA TO BE REMOVED
4 - RELOCATE 'HOLIDAY' PARKING SIGN (see note •2)
5 - RELOCATE SPEED LIMIT SIGN (see note •3)
6 - REMOVE SIDEWALK/CURB
7 - EX. STORM DRAIN TO BE RELOCATED
8 - EX. SANITARY MH • PIPE TO BE REMOVED
9 - EXISTING STORM DRAIN TO BE REMOVED
10 - EXISTING INLET TO BE REMOVED (see note •14)
11 - REMOVE CATCHBASIN AND REPLACE (see c-105)
12 - RELOCATE WATER MAIN AND VALVE (see c-106)

DEMOLITION NOTES:

1. CONTRACTOR SHALL COORDINATE WITH THE COR AND FORT HAMILTON DPW PRIOR TO ANY UTILITY WORK.
2. CONTRACTOR TO COORDINATE WITH FT. HAMILTON DPW FOR NEW LOCATION OF 'HOLIDAY' PARKING SIGN.
3. CONTRACTOR TO RELOCATE THE SPEED LIMIT SIGN TO THE NORTH ALONG SCHUM AVENUE (TO BE COORDINATED WITH FT. HAMILTON DPW).
4. REFER TO ELECTRICAL SHEETS FOR ADDITIONAL ELECT./TELECOM WORK.
5. PROTECT ALL EXISTING TREES AND UTILITIES THAT ARE TO REMAIN.
6. CLEAR AND REMOVE VEGETATION, ORGANICS AND TOPSOIL TO A DEPTH OF 18" MIN., OR AS INDICATED IN GEOTECHNICAL REPORT.
7. CLEAR ALL STONE AND SUBBASE FROM PARKING AREA (DEMO KEYNOTE •3).
8. TOPSOIL AND FILL REMOVED FROM SITE MAY BE STOCKPILED AND USED AS FILL IN LANSCAPED AREAS, PROVIDED THAT THEY MEET ALL REQUIREMENTS IN THE FILL SPECIFICATIONS.
9. ALL AREAS OUTSIDE THE LIMIT OF DISTURBANCE WHICH ARE ADJACENT TO CONSTUCTION ACTIVITY SHALL BE PROTECTED.
10. PROTECT ALL STREETS, ROADS AND ADJACENT IMPROVEMENTS.
11. CONTROL DUST BY PERIODICALLY SPRAYING WORK AREA WITH WATER, AS PER NYS DEC SOIL EROSION • SEDIMENT CONTROL STANDARDS.
12. HAUL DEMOLISHED MATERIAL AND DEBRIS OFF-SITE AND OFF INSTALLATION EXCEPT ITEMS DIRECTED BY THE COR TO BE SALVAGED. ITEMS FROM SITE SHALL BE LEGALLY DISPOSED OF WITHOUT DISRUPTING ANY VEHICULAR OR PEDESTRIAN FLOW. ALL EXCAVATED MATERIAL TO BE DISPOSED OF AS PER ALL LOCAL, STATE AND FEDERAL REGULATIONS.
13. EXISTING INLET (KEYNOTE •11) AND STORM DRAIN (KEYNOTE •7) THRU SITE ARE TO BE REMOVED AND REPLACED. (see sheet C-105).
14. EXISTING INLET TO BE REMOVED AND PIPE PLUGGED AT EXISTING INLET.

US Army Corps of Engineers ®

MARK	DESCRIPTION	DATE

DESIGNED BY: KW
DRAWN BY: KW
CHECKED BY:
SUBMITTED BY:
ISSUE DATE: July 2025
SOLICITATION NO.: W912DS23F0031
CONTRACT NO.: W912DS19D0007
SIZE: ANSI D

US ARMY CORPS OF ENGINEERS
NEW YORK DISTRICT
26 FEDERAL PLAZA
NEW YORK, NY 10278

CHILD DEVELOPMENT CENTER
USAG FORT HAMILTON, NEW YORK
PROJECT #75662

DEMOLITION PLAN

SHEET ID
C-102

GENERAL NOTES

1. ALL DIMENSIONS, ELEVATIONS, AND STATIONS ARE IN FEET, UNLESS INDICATED OTHERWISE.

2. ALL CALLOUTS. COORDINATES. AND DIMENSIONS ARE POINTED TO OR MEASURED TO STRUCTURE CENTER, EDGE OF PAVEMENT, BACK OF CURB, OR THE OUTSIDE FACE OF FOUNDATION WALL, UNLESS INDICATED OTHERWISE.

3. ALL WORK SHALL BE SUBJECT TO INSPECTION BY AUTHORIZED PERSONNEL OF LOCAL AND GOVERNMENT REGULATORY AGENCIES AND THE CONTRACTING OFFICER.

4. ALL WORK SHALL BE CONDUCTED IN ACCORDANCE WITH THE PLANS AND SPECIFICATIONS AND LOCAL AND GOVERNMENT CODES, ORDINANCES, AND REGULATIONS. IN CASE OF CONTRADICTION OR DISCREPANCY BETWEEN REQUIREMENTS, CONTRACTOR SHALL INCORPORATE WHICHEVER IS MOST STRINGENT. WHERE A QUESTION REMAINS ON WHICH REQUIREMENT IS MOST STRINGENT, CONTRACTOR SHALL SUBMIT ISSUE TO THE CONTRACTING OFFICER IN WRITING. THE DECISION OF THE CONTRACTING OFFICER SHALL BE CONSIDERED FINAL.

5. ALL WORK SHALL BE CONDUCTED IN A PROFESSIONAL WORKMANSHIP MANNER USING QUALITY MATERIALS. WORK SHALL CONFORM TO PROJECT SPECIFICATIONS UNLESS DIRECTED BY THE CONTRACTING OFFICER.

6. WHEN CONSTRUCTION WORK IS RESTRICTED TO BEING PERFORMED WITHIN EASEMENTS, THE CONTRACTOR SHALL CONFINE WORK WITHIN THE PERMANENT AND TEMPORARY EASEMENTS.

7. THE CONTRACTOR SHALL MAINTAIN UPDATED RECORD DRAWINGS AT ALL TIMES THROUGH THE DURATION OF THE PROJECT. CONSTRUCTION RECORD DRAWINGS SHALL BE SUBMITTED TO THE CONTRACTING OFFICER.

8. DURING CONSTRUCTION OF THE PROJECT, CONTRACTOR SHALL BE RESPONSIBLE FOR KEEPING TRACK OF ANY CONTRACTING OFFICER - APPROVED FIELD CONSTRUCTION REVISIONS TO THE DESIGN DEPICTED ON APPROVED CONSTRUCTION DRAWINGS. THESE REVISIONS SHALL BE USED TO PREPARE RECORD DRAWINGS OF COMPLETED CONSTRUCTION.

9. ALL VARIATIONS IN PROJECT CONDITIONS, LOCATIONS, AND CONFIGURATIONS, AND ANY OTHER CHANGES OR DEVIATIONS FROM THE INFORMATION PRESENTED ON THE ORIGINAL, APPROVED CONSTRUCTION DRAWINGS SHALL BE NOTED. THIS INCLUDES ANY BURIED OR CONCEALED CONSTRUCTION AND UTILITY FEATURES THAT WERE REVEALED DURING CONSTRUCTION.

10. THE CONTRACTING OFFICER SHALL REVIEW THE COMPLETENESS, ACCURACY, AND FORMAT OF SUBMITTED RECORD DRAWINGS. IF THE RECORD DRAWINGS ARE CONSIDERED UNACCEPTABLE, THEY SHALL BE RETURNED TO THE CONTRACTOR FOR CORRECTION AND RESUBMISSION.

11. THE SURVEY WAS PERFORMED BY LARSON DESIGN GROUP. SURVEY WAS PERFORMED ON APRIL 25-27, 2023. HORIZONTAL DATUM IS BASED ON NAD 1983 - NEW YORK (LONG ISLAND 3104) STATE PLANE. VERTICAL DATUM IS NGVD88.

12. CONTRACTOR SHALL RETAIN A LICENSED SURVEYOR TO SURVEY PROJECT IMPROVEMENTS. IF BENCHMARKS SHOWN ARE IN AREAS THAT REQUIRE DEMOLITION, OTHER BENCHMARKS SHALL BE ESTABLISHED BEFORE DEMOLITION AND CONSTRUCTION WORK BEGINS. CONTRACTOR SHALL SUPPLY CERTIFIED CONTROL POINT DATA TO CONTRACTING OFFICER AFTER COMPLETION OF CONSTRUCTION.

13. THE LOCATIONS OF STRUCTURES AND UNDERGROUND UTILITIES, AS INDICATED ON PLAN, HAVE BEEN OBTAINED FROM EXISTING RECORDS AND FIELD SURVEYS. UNDERGROUND STRUCTURES AND UTILITIES MAY BE PRESENT WHICH ARE NOT DOCUMENTED OR LOCATED.

14. THE CONTRACTOR SHALL FIELD-CHECK ALL EXISTING CONDITIONS AND BE THOROUGHLY FAMILIAR WITH THE SITE BEFORE ANY WORK COMMENCES. ANY DISCREPANCIES IN THE DRAWINGS SHALL BE IMMEDIATELY REPORTED TO THE CONTRACTING OFFICER BEFORE ANY FURTHER WORK COMMENCES.

15. IT SHALL BE THE CONTRACTOR'S RESPONSIBILITY TO FIELD-VERIFY THE EXISTING STRUCTURES, UTILITIES, AND SURVEY INFORMATION, AND TO TAKE ALL THE NECESSARY PRECAUTIONS DURING DEMOLITION AND CONSTRUCTION. CONTRACTOR SHALL VERIFY EXISTENCE AND MARK LOCATIONS OF ALL UTILITIES, INCLUDING SERVICE CONNECTIONS TO UNDERGROUND UTILITIES, PRIOR TO BEGINNING WORK. CONTRACTOR SHALL CONTACT THE CONTRACTING OFFICER AND ALL ASSOCIATED UTILITY COMPANIES AND AGENCIES TO IDENTIFY THE LOCATION OF UTILITIES. THERE IS NO GUARANTEE, EITHER EXPRESSED OR IMPLIED, THAT THE LOCATIONS, SIZE AND TYPE OF MATERIAL OF EXISTING UNDERGROUND UTILITIES INDICATED ARE REPRESENTATIVE OF THOSE TO BE ENCOUNTERED DURING CONSTRUCTION.

16. PRIOR TO CONSTRUCTION, THE CONTRACTOR SHALL NOTIFY THE CONTRACTING OFFICER OF OPERATIONAL PLANS. IN THE EVENT AN UNEXPECTED UTILITY OR STRUCTURE INTERFERENCE OR CONFLICT IS ENCOUNTERED DURING CONSTRUCTION, THE CONTRACTOR SHALL IMMEDIATELY NOTIFY THE CONTRACTING OFFICER. ANY UTILITY SERVICES OR STRUCTURES DISTURBED BY THE CONTRACTOR'S OPERATIONS SHALL BE RESTORED IMMEDIATELY AT CONTRACTOR'S EXPENSE TO THE SATISFACTION OF THE CONTRACTING OFFICER.

17. THE CONTRACTOR IS RESPONSIBLE FOR PROTECTING ALL ITEMS NOT TO BE DAMAGED DURING DEMOLITION AND CONSTRUCTION. THE CONTRACTOR SHALL REPAIR OR REPLACE DAMAGED OR DISTURBED ITEMS TO THE SATISFACTION OF THE CONTRACTING OFFICER, AT THE CONTRACTORS EXPENSE.

18. IMPLEMENT AND MAINTAIN ALL SOIL EROSION CONTROL STRUCTURES AND MEASURES NECESSARY THROUGHOUT CONSTRUCTION. FOLLOW NEW YORK STATE DEC SOIL EROSION AND SEDIMENT CONTROL REQUIREMENTS.

19. AS NECESSARY, PROVIDE TRAFFIC CONTROL DEVICES IN ACCORDANCE WITH THE LATEST MANUAL ON UNIFORM TRAFFIC CONTROL DEVICES, AND COORDINATE WITH THE CONTRACTING OFFICER.

UTILITY NOTES

1. ALL PIPE SIZES ARE IN INCHES UNLESS INDICATED OTHERWISE.

2. CONTRACTOR IS RESPONSIBLE FOR COORDINATING ALL BUILDING CONNECTIONS WITH BUILDING CONTRACTOR AND THE INFORMATION PROVIDED ON MECHANICAL AND ELECTRICAL DRAWINGS FOR EACH FACILITY.

3. CONTRACTOR SHALL CONTACT THE CONTRACTING OFFICER AND ALL UTILITY COMPANIES AND AGENCIES TO IDENTIFY THE LOCATION OF UTILITIES PRIOR TO COMMENCEMENT OF WORK. ALL UTILITY SIZES, INVERTS AND LOCATIONS NEED TO BE VERIFIED PRIOR TO CONSTRUCTION.

4. CONTRACTOR SHALL COORDINATE ALL REQUIRED UTILITY SHUTDOWNS FOR UTILITY CONNECTIONS WITH THE CONTRACTING OFFICER AND FT. HAMILTON DPW.

5. CONNECTION TO THE EXISTING WATER MAINS AND THE SANITARY • STORM SEWERS SHALL BE CONSTRUCTED IN ACCORDANCE WITH ALL REQUIREMENTS OF ASSOCIATED UTILITY COMPANIES AND/OR AGENCIES.

6. CONTRACTOR IS RESPONSIBLE FOR COORDINATING AND PAYING ALL UTILITY CONNECTION FEES AND OBTAINING ALL PERMITS REQUIRED FOR THE UTILITY CONSTRUCTION AND CONNECTIONS, IF NECESSARY. THIS INCLUDES ALL FEES ASSOCIATED WITH CONNECTION CHARGES AND METERS.

7. THE MINI. DEPTH OF COVER FOR UTILITIES SHALL BE AS FOLLOWS UNLESS OTHERWISE NOTED:
   a. WATER: 48 INCHES
   b. FIRE PROTECTION: 48 INCHES
   c. ALL OTHER UTILITIES: 36 INCHES

8. ALL UNDERGROUND UTILITIES ARE SUBJECT TO ACCEPTANCE TESTING AND INSPECTION METHODS DETAILED IN THE SPECIFICATIONS, WHICH MAY INCLUDE VIDEO CAMERA INSPECTION.

9. ANY CHANGES TO PROPOSED UTILITY DESIGN SHALL BE APPROVED BY ENGINEER AND THE CONTRACTING OFFICER.

10. CONTRACTOR SHALL COORDINATE WITH THE COR PRIOR TO REMOVAL OF EXISTING UTILITIES IN SERVICE. RELOCATED UTILITIES SHALL BE CONSTRUCTED BEFORE REMOVAL OF EXISTING UTILITIES TO ENSURE UNINTERRUPTED SERVICE TO THE FACILITIES SERVED BY THE UTILITY. ALL RELOCATIONS SHALL BE COORDINATED WITH THE CONTRACTING OFFICER.

11. UTILITY CAPPING METHODS SHALL BE IN ACCORDANCE WITH MANUFACTURER'S RECOMMENDATIONS FOR SPECIFIC PIPE MATERIAL IN SERVICE. ALL CAPPING SHALL BE INSPECTED AND APPROVED BY THE CONTRACTING OFFICER.

12. ALL UTILITIES, STRUCTURES, VALVES, ETC. TO REMAIN SHALL BE PROTECTED AND ADJUSTED TO FINISH GRADE.

13. IN AREAS OF UTILITY REMOVAL OF ABANDONED LINES, THE PORTION OF EXISTING ABANDONED LINES TO REMAIN SHALL BE CAPPED OR PLUGGED AT REMOVAL INTERFACE.

CIVIL CONCRETE + REINFORCEMENT NOTES

1. DESIGN IS BASED ON THE FOLLOWING MATERIAL STRENGTHS USING NORMAL WEIGHT CONCRETE:
   A. 28 DAY CONCRETE CYLINDER STRENGTH (SLAB ON GROUND): 4,000 psi
   B. DEFORMED BAR REINFORCEMENT: 60,000 psi
   C. WELDED WIRE REINFORCEMENT: 65,000 psi

2. PROVIDE THE FOLLOWING MINIMUM COVER FOR REINFORCEMENT:
   A. CONC. CAST AGAINST AND PERMANENTLY EXPOSED EARTH: 3 in.
   B. CONC. EXPOSED TO WEATHER:
      NO. 6 - NO. 18 BARS: 2 in.
      NO. 5 BARS AND SMALLER: 1.5 in.

3. PROVIDE 1/2" PRE-FORMED EXPANSION JOINTS AGAINST ALL HARD SURFACES INCLUDING BUT NOT LIMITED TO OTHER CONC. SURFACES, MASONRY OF ANY KIND, METALS OF ANY KIND, ETC.

CIVIL ABBREVIATIONS

ABC	AGGREGATE BASE COURSE	ELEC.	ELECTRIC	OD	OUTSIDE DIAMETER
AC	ACRES	ELV	ELEVATION	PROP.	PROPOSED
APPROX.	APPROXIMATE	EP	EDGE OF PAVEMENT	PSI	POUNDS PER SQUARE INCH
BIT.	BITUMINOUS	EQ.	EQUAL	PVC	POLYVINYL CHLORDE
BLDG	BUILDING	ESVP	EXTRA STRENGTH VITRIFIED PIPE	R	RADIUS
CB	CATCH BASIN	EX.	EXISTING	RCP	REINFORCED CONCRETE PIPE
CJ	CONTRACTION JOINT	FF	FINISHED FLOOR	REQ'D	REQUIRED
CLF	CHAIN LINK FENCE	GR	GRATE	SAN	SANITARY
CO	CLEAN OUT	HDPE	HIGH DENSITY POLYETHYLENE	SF	SQUARE FEET
COMM	COMMUNICATIONS	HP	HIGH POINT	SMH	SANITARY MANHOLE
CONC	CONCRETE	HPS	HIGH PRESSURE STEAM	ST	STEAM
DC	DEPRESSED CURB	INV	INVERT	STA.	STATION
DGA	DENSE GRADED AGGREGATE	LF	LINEAR FEET	STM	STORM
DIAM	DIAMETER	LOD	LIMIT OF DISTURBANCE	TBD	TO BE DETERMINED
DIP	DUCTILE IRON PIPE	MAX.	MAXIMUM	TBR	TO BE REMOVED
DIM.	DIMENSION	MH	MANHOLE	TC	TOP OF CURB
DMH	DRAINAGE MANHOLE	MIN.	MINIMUM	THK.	THICK
DPW	DIRECTORATE OF PUBLIC WORKS	NIC	NOT IN CONTRACT	TW	TOP OF WALL
DWG	DRAWING	NOM.	NOMINAL	TYP.	TYPICAL
E-SC	EROSION AND SEDIMENT CONTROL	NTP	NOTICE TO PROCEED	UFC	UNIFIED FACILITIES CRITERIA
EA	EACH	NYC/S	NEW YORK CITY/STATE	W/	WITH
EB	ELECTRICAL BOX	O.C.	ON CENTER	WWF	WELDED WIRE FABRIC
EJ	EXPANSION JOINT				

CONSTRUCTION ACCESS/STAGING

1. ACCESS AND HAUL ROUTES FOR ALL CONTRACTOR PERSONNEL, VEHICLES, EQUIPMENT, AND DELIVERIES ARE SHOWN ON SHEET C-701 AND ARE SUBJECT TO THE APPROVAL OF THE CONTRACTING OFFICER AND FORT HAMILTON DPW. ACCESS ROUTES AND HAUL ROUTES ARE SUBJECT TO CHANGE AT THE DIRECTION OF THE CONTRACTING OFFICER AND MAY CHANGE BASED ON OPERATIONAL REQUIREMENTS OF THE BASE.

2. CONTRACTOR SHALL COORDINATE ACTIVITIES AND MAINTAIN ALL ACCESS AND HAUL ROUTES IN A MANNER THAT ALLOWS UNOBSTRUCTED EMERGENCY ACCESS TO ALL PROJECT AREAS AND EXISTING ROADWAYS AT ALL TIMES WITHOUT DELAY TO EMERGENCY AND SECURITY VEHICLE RESPONSE TIME.

3. IF ANY EMERGENCY ROUTES REQUIRE CLOSURE DUE TO CONSTRUCTION ACTIVITIES, CONTRACTOR SHALL NOTIFY THE CONTRACTING OFFICER AND FT. HAMILTON DPW.

4. CONTRACTOR SHALL MAINTAIN ACCESS AND HAUL ROUTES TO BE FREE FROM DEBRIS CAUSED FROM CONSTRUCTION ACTIVITIES ON A DAILY BASIS.

5. CONTRACTOR SHALL RESTRICT ALL OPERATIONS TO AREAS WITHIN THE CONSTRUCTION LIMITS UNLESS COORDINATED OTHERWISE WITH THE CONTRACTING OFFICER.

6. CONTRACTOR SHALL PROVIDE TEMPORARY CONSTRUCTION FENCING AROUND THE ENTIRE SITE DURING CONSTRUCTION.

7. CONTRACTOR IS RESPONSIBLE FOR ESTABLISHING NECESSARY STAGING AND STOCKPILE AREAS FOR MATERIALS AND EQUIPMENT. LOCATION OF CONTRACTOR'S STAGING SHALL BE AS SHOWN ON C-701 AND WITHIN THE LIMITS OF CONSTRUCTION AND IS SUBJECT TO THE APPROVAL OF THE CONTRACTING OFFICER. CONTRACTOR MAY SUBMIT ALTERNATIVES TO THE STAGING AREA LOCATIONS AS SHOWN. THE CONTRACTOR'S STAGING AREA IS SUBJECT TO CHANGE AT THE DIRECTION OF THE COR AND MAY CHANGE BASED ON THE OPERATIONAL REQUIREMENTS OF THE BASE.

8. WHEN NOT ENGAGED IN CONSTRUCTION ACTIVITIES, CONTRACTOR'S EQUIPMENT AND VEHICLES SHALL BE PARKED IN THE STAGING AREA OR WITHIN CONSTRUCTION SITE.

9. CONTRACTOR SHALL PROVIDE A MINIMUM NOTICE OF 48 HOURS TO THE CONTRACTING OFFICER REGARDING CONSTRUCTION DELIVERIES PRIOR TO THOSE DELIVERIES. ALL DELIVERIES SHALL BE SCHEDULED MONDAY-FRIDAY, 8:00 AM TO 3:00 PM.

10. ALL CONTRACTOR VEHICLES AND PERSONNEL ARE SUBJECT TO A SEARCH BY SECURITY WHEN ENTERING THE BASE AND MAY EXPERIENCE DELAYS. ALL PERSONNEL MUST HAVE A CURRENT AND VALID PHOTO IDENTIFICATION PER BASE SECURITY REQUIREMENTS, AND ALL VEHICLES MUST HAVE CURRENT AND VALID REGISTRATION AND INSURANCE.

11. ALL CONTRACTOR VEHICLES AND PERSONNEL SHALL BE RESPONSIBLE FOR COORDINATING WITH THE BASE SECURITY OFFICE IN OBTAINING PROPER SECURITY CLEARANCE AND BADGING PRIOR TO ENTERING SECURE AREAS.

12. ACCESS POINTS, HAUL ROUTES, STAGING AREA, AND ANY OTHER AREAS DISTURBED BY THE CONTRACTOR SHALL BE RESTORED TO THEIR ORIGINAL CONDITION OR BETTER TO THE SATISFACTION OF THE CONTRACTING OFFICER.

13. REFER TO SPEC SECTION *01 50 00 FOR CONSTRUCTION FENCING.

DEMOLITION NOTES

1. "DEMOLISH" SHALL MEAN TO REMOVE AN OBJECT IN ITS ENTIRETY. RESTORE TO GRADE AND SURFACE IMPROVEMENTS TO MATCH EXISTING CONDITIONS OR TO REQUIREMENTS OF NEW WORK, AS APPLICABLE.

2. "TO REMAIN" SHALL MEAN ITEM SHALL REMAIN IN PLACE AND WILL BE PROTECTED DURING ALL PHASES OF CONSTRUCTION.

3. PROTECT ALL EXISTING FEATURES NOT MARKED FOR DEMOLITION. ANY ITEM DAMAGED DURING THE PERFORMANCE OF THE WORK WILL BE RESTORED TO ITS ORIGINAL CONDITION, OR REPLACED WITH NEW AT THE CONTRACTOR'S EXPENSE. TAKE PRECAUTIONS TO NOT OVERLOAD PAVEMENTS WHICH SHALL REMAIN.

4. PAVEMENT TO BE DEMOLISHED SHALL BE SAWCUT AND REMOVED ALONG A CLEAN EVEN EDGE TO PROVIDE A SMOOTH TIE-IN OF NEW PAVEMENT.

5. DISPOSAL OF ALL DEMOLISHED MATERIALS MUST BE OUTSIDE THE LIMITS OF GOVERNMENT CONTROLLED LANDS IN ACCORDANCE WITH LOCAL, STATE, AND FEDERAL REGULATIONS. NOTIFY THE CONTRACTING OFFICER'S REPRESENTATIVE IF ANY MATERIAL IS FOUND TO CONTAIN HAZARDOUS, TOXIC, BIOLOGICAL OR RADIOLOGICAL SUBSTANCES. ALL WASTE MATERIAL TO BE HAULED OFF-BASE MUST BE ANALYZED FOR PETROLEUM CONTAMINANTS IN ACCORDANCE WITH CITY • STATE RULES DISPOSE OF IMPACTED SOILS ACCORDINGLY.

6. COORDINATE AND CONFIRM LIMITS OF UTILITY DEMOLITION WITH NEW UTILITY CONNECTION POINTS. DEMOLISH UTILITIES AT NEAREST APPROPRIATE JOINTS WHEN POSSIBLE IF UTILITY IS TO BE ABANDONED, PLUG AND CAP REMAINING ENDS.

US Army Corps of Engineers ®

MARK	DESCRIPTION	DATE

DESIGNED BY: KW
DRAWN BY: KW
CHECKED BY:
SUBMITTED BY:
ISSUE DATE: July 2025
SOLICITATION NO.: W912DS23F0031
CONTRACT NO.: W912DS19DD007
SIZE: ANSI D

US ARMY CORPS OF ENGINEERS
NEW YORK DISTRICT
26 FEDERAL PLAZA
NEW YORK, NY 10278

CHILD DEVELOPMENT CENTER
USAG FORT HAMILTON, NEW YORK
PROJECT #75662

CIVIL NOTES

SHEET ID
C-103

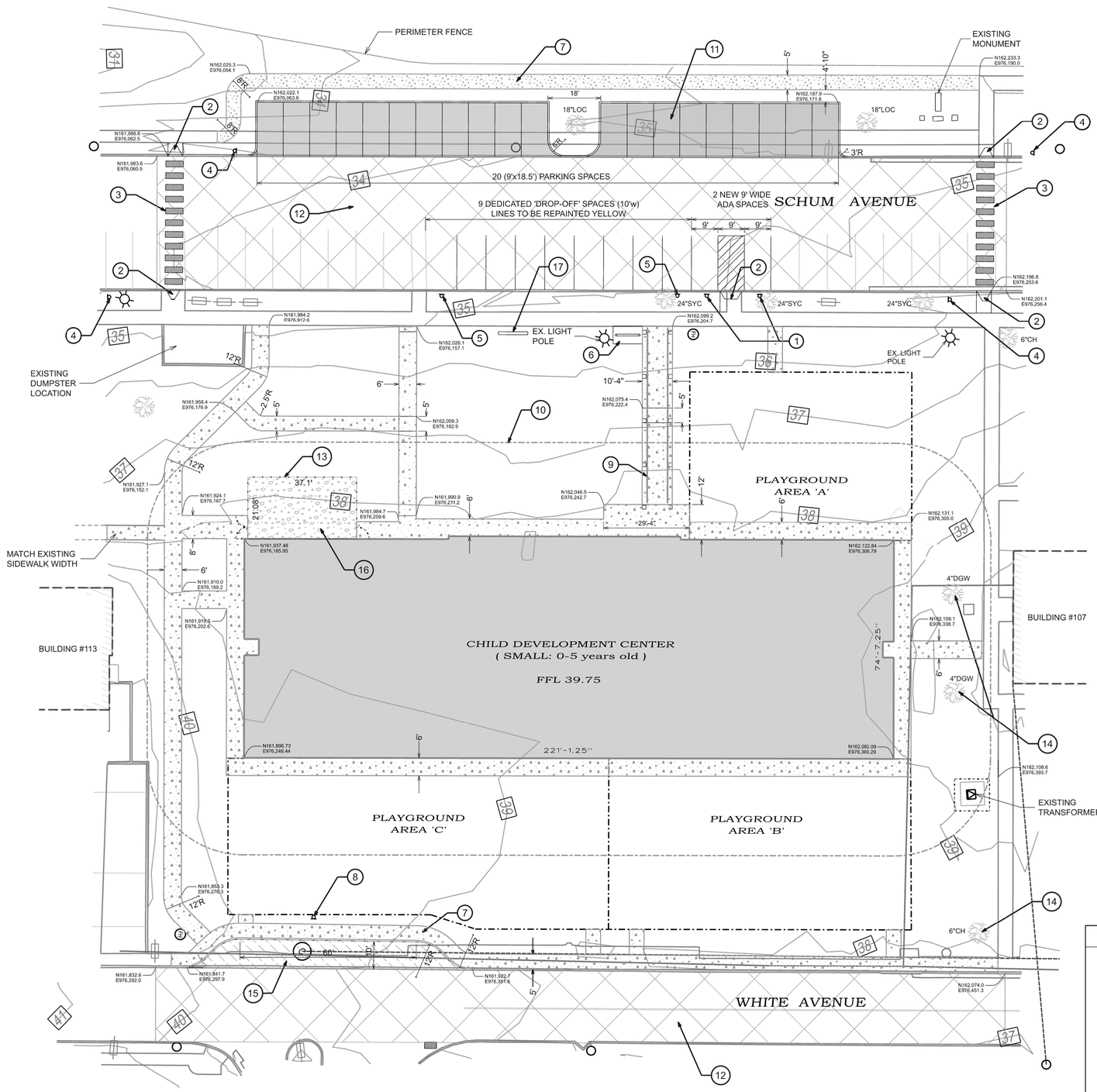

SCALE: 1" = 20'

SITE LAYOUT NOTES:

1. SEE SHEET C-103 FOR GENERAL NOTES.
2. DIMENSIONS ARE TO FACE OF CURB AND TO FACE OF BUILDING WALL.
3. PAVEMENT STRIPING SHALL BE 4" NON-REFLECTIVE WHITE PAINT, UNLESS OTHERWISE NOTED. PAINTED ISLAND STRIPING SHALL BE AT 45 DEGREES, 2' O.C.
4. NEW SIDEWALKS TO MATCH INTO EXISTING SIDEWALKS
5. ALL EXISTING PAVEMENT MARKINGS TO BE REPAINTED TO EXISITING CONDITIONS, UNLESS OTHERWISE NOTED TO BE CHANGED ON THIS PLAN.
6. REFER TO THE PLAYGROUND SHEETS FOR THE PLAYGROUND DESIGN (A, B + C) AND TO CONFIRM ALIGNMENT OF WALKWAYS AT EGRESS POINTS, AND CONCRETE PADS FOR TRIKE GARAGE/PRAM STORAGE.
7. REFER TO DETAIL 5 ON S-302 FOR CANOPY COLUMN DETAILS FOR WALKWAY THICKNESS/LAYOUT.
8. PAVEMENT MILLING/REPAVEMENT SHALL BE FOR FULL WIDTH OF STREET FOR THE LIMITS SHOWN ON PLAN.
9. REFER TO ARCHITECTURAL SHEETS FOR MECHANICAL YARD DETAILS.
10. BIKE RACK TO BE ON A 6'x10' PAD, OR AS PER MANUFACTURERS REQUIREMENTS.
11. REFER TO LANDSCAPE SHEETS FOR BOLLARD LOCATIONS AROUND PLAYGROUNDS.

SITE LAYOUT KEYNOTES:

1. ADA VAN ACCESSIBLE PARKING SIGN	10. 33' AT/FP SETBACK LINE
2. ADA ACCESSIBLE CURB RAMP	11. NEW ASPHALT PAVEMENT
3. PEDESTRIAN CROSSWALK	12. EXISTING STREET AREA TO BE MILLED + REPAVED
4. PEDESTRIAN CROSSWALK SIGN	13. MECHANICAL YARD w/ 8'h CLF
5. PICK UP/DROP OFF ONLY SIGN	14. EXIST. TREE TO REMAIN
6. BIKE RACK	15. NEW CONCRETE PAVEMENT
7. NEW SIDEWALK	16. GRAVEL YARD
8. DELIVERY VEHICLES ONLY SIGN	17. EXTERIOR SIGN (see A-614)
9. ADA ACCESSIBLE RAMP w/ HANDRAIL	

US Army Corps of Engineers ®

MARK	DESCRIPTION	DATE

DESIGNED BY: KW
DRAWN BY: KW
CHECKED BY:
ISSUE DATE: July 2025
SOLICITATION NO.: W912DS23F0031
CONTRACT NO.: W912DS19D0007
SUBMITTED BY:
SIZE: ANSI D

US ARMY CORPS OF ENGINEERS
NEW YORK DISTRICT
26 FEDERAL PLAZA
NEW YORK, NY 10278

CHILD DEVELOPMENT CENTER
USAG FORT HAMILTON, NEW YORK
PROJECT #75662

SITE PLAN

SHEET ID
C-104

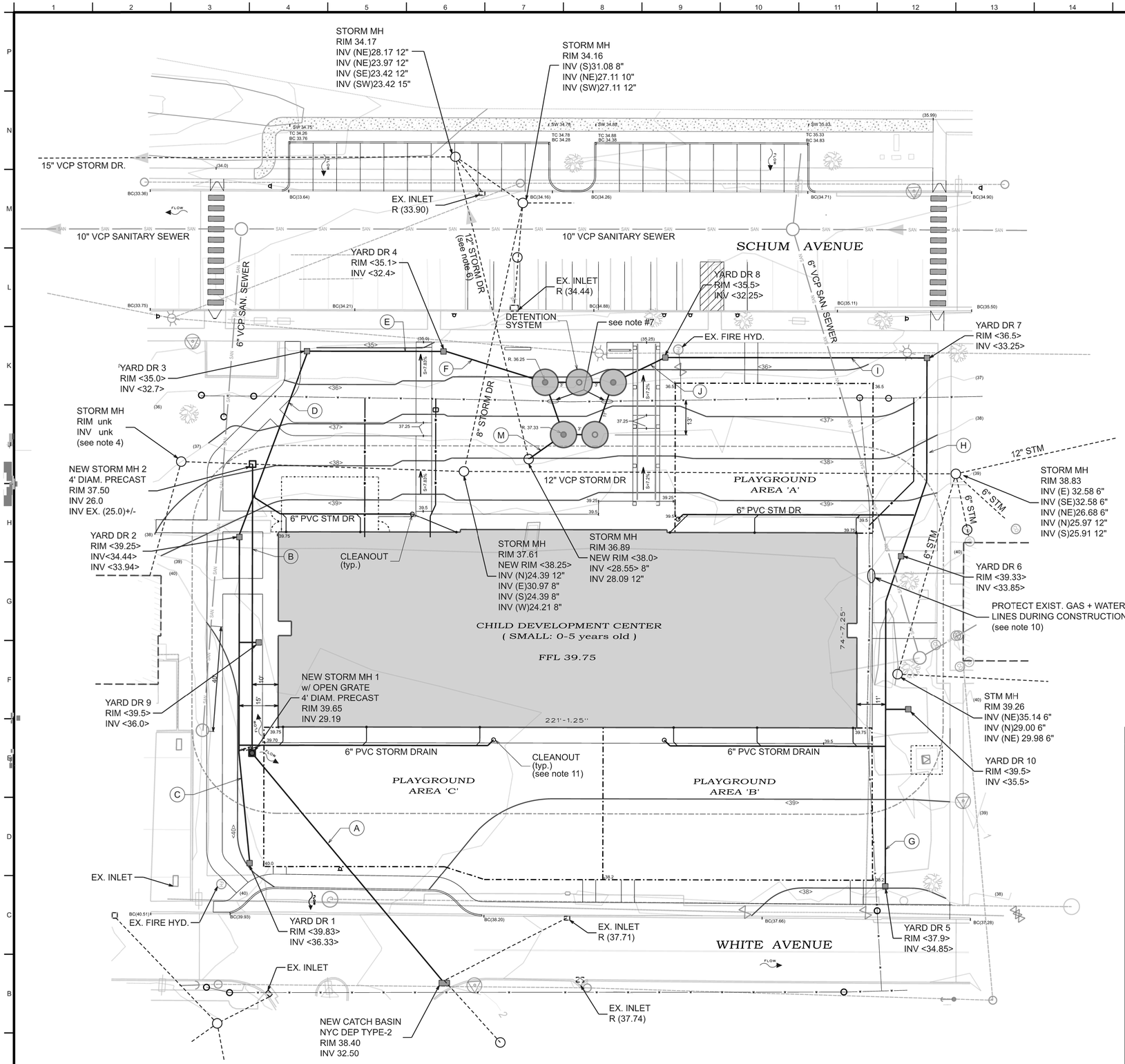

SCALE: 1" = 20'

SITE LAYOUT NOTES:

1. SEE SHEET C-103 FOR GENERAL NOTES.
2. ADJUST ALL EXISTING MH COVERS TO MEET NEW GRADING AS NEEDED. FOR MANHOLES IN STREET AREA, CONFIRM THAT FRAME AND GRATE ARE TRAFFIC LOAD RATED.
3. COORDINATES SHOWN ARE TO CENTER OF DRAINS, MANHOLES AND CATCH BASINS, UNLESS OTHERWISE SHOWN ON PLAN VIEW.
4. NO INFORMATION ON STORM MANHOLE SHOWN ON SURVEY. CONTRACTOR SHALL EXCAVATE TO CONFIRM LOCATION AND INVERT, PRIOR TO ANY STORM DRAINAGE WORK AND NEW 12" DIVERSION LINE WILL BE ADJUSTED TO MEET NEW INVERT - TO BE A STRAIGHT SLOPE FROM NEW CB).
5. CATCH BASIN SHALL BE A NYC DEP STANDARD TYPE-2 CATCH BASIN AND HAVE A NYC DEP STANDARD FRAME AND COVER. STORM MH'S SHALL BE NYC DEP STANDARD 4' DIAMETER PRECAST MH. MANHOLE COVERS SHALL ONLY IDENTIFY 'STORM' OR 'SANITARY' AND NOT NYC DEP.
6. CONTRACTOR SHALL FLUSH OUT THE 12" STORM OUTLET AND PERFORM A TELEVISION INSPECTION TO DETERMINE THE CONDITION OF THE STORM PIPE. RESULTS TO BE COORDINATED WITH COR AND FT. HAMILTON DPW.
7. CONTRACTOR TO LOCATE EXISTING WATER MAIN AT ALL STORM DRAIN CROSSINGS. IF CONFLICT, WATER LINE TO BE RAISED/LOWERED TO ACCOMMODATE A MIN. OF 6" VERTICAL CLEARANCE OR 12" HORIZONTAL CLEARANCE.
8. REFER TO SHEET C-105A FOR DRAINAGE WITHIN PLAYGROUND AREAS.
9. REFER TO SHEET C-503 FOR ELEVATIONS AND INVERTS FOR THE NEW STORMWATER DETENTION SYSTEM.
10. CONTRACTOR TO LOCATE EXISTING WATER LINE AND GAS TO CONFIRM LOCATION AND DETERMINE IF THERE IS INTERFERNCE WITH THE NEW FOUNDATION AND COORDINATE ANY RELOCATION WITH THE COR • DPW.
11. NEW STORM CLEANOUTS FOR ROOFLEADERS TO BE ANGLED INTO THE CONCRETE WALK TO AVOID ANY TRIP HAZARDS IN THE PLAYGROUNDS.

PIPE SCHEDULE:

A: 12" PVC STORM DRAIN L = 114.5' @ 2.89%	G: 8" PVC STORM DRAIN L = 128' @ 0.78%
B: 12" PVC STORM DRAIN L = 110.5' @ 2.89%	H: 8" PVC STORM DRAIN L = 77' @ 0.78%
C: 8" PVC STORM DRAIN L = 124.5' @ 1.52%	I: 8" PVC STORM DRAIN L = 100' @ 1.00%
D: 8" PVC STORM DRAIN L = 75.5' @ 1.64%	J: 10" PVC STORM DRAIN L = 17' @ 0.941%
E: 10" PVC STORM DRAIN L = 52' @ 0.56%	STORMWATER DETENTION SYS. 5 - 10' DIAM. PRECAST RINGS H = 5' (2.74' detention height)
F: 10" PVC STORM DRAIN L = 35' @ 0.886%	M: 8" PVC STORM OUTFALL FROM DETENTION SYSTEM L = 8' @ 10%

US Army Corps of Engineers ®

MARK	DESCRIPTION	DATE

DESIGNED BY: KW
DRAWN BY: KW
CHECKED BY:
ISSUE DATE: July 2025
SOLICITATION NO.: W912DS23F0031
CONTRACT NO.: W912DS19DD007
SUBMITTED BY:
SIZE: ANSI D

US ARMY CORPS OF ENGINEERS
NEW YORK DISTRICT
26 FEDERAL PLAZA
NEW YORK, NY 10278

CHILD DEVELOPMENT CENTER
USAG FORT HAMILTON, NEW YORK
PROJECT #75662

DRAINAGE + GRADING PLAN

SHEET ID
C-105

NOTES:

1. 2" (min.) PERFORATED PIPE TO BE LAID WITHIN THE PLAYGROUNDS 'POUR-IN-PLACE' RUBBER SURFACE AREA TO PROVIDE SUB-SURFACE DRAINAGE. CONTRACTOR IS TO SITE ADJUST THE PIPE LAYOUT TO AVOID THE PLAYGROUND EQUIPMENT/FOOTINGS.
2. PERFORATED PIPING IS TO BE LAID AT 0% SLOPE WITH 2" (min.) SOLID PIPING TO BE SLOPED DOWN TO TIE INTO THE 6" PVC STORM DRAINS.
3. PERFORATED PIPING TO BE LAID IN 1/2" COMPACTED GRAVEL.
4. REFER TO PG SHEETS FOR PLAYGROUND LAYOUT, DIMESIONS AND DETAILS.
5. GRAVEL LAYER TO BE SURROUNDED ON BOTTOM AND SIDES WITH FILTER FABRIC. REFER TO P-I-P MANUFACTURER RECOMMENDATIONS FOR FILTER FABRIC BETWEEN THE RUBBER SURFACE LAYER AND GRAVEL LAYER.

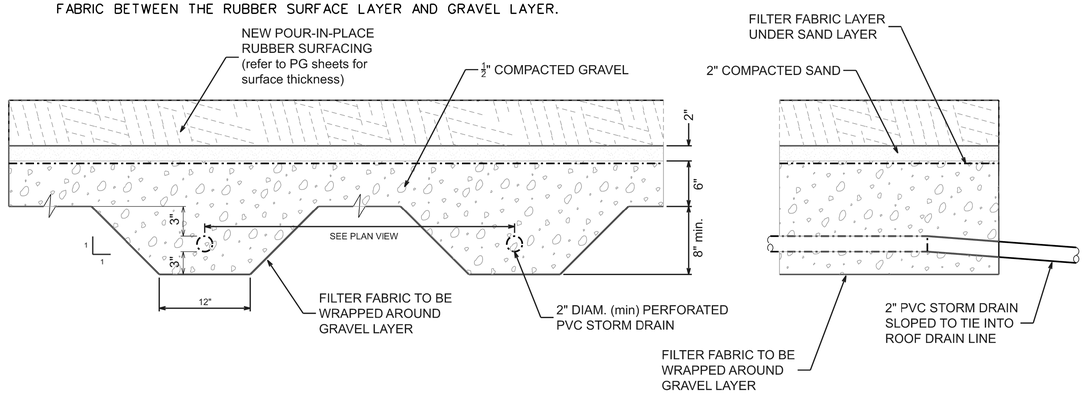

PLAYGROUND PERFORATED PIPING DRAINAGE SYSTEM

1 / C-105A — N.T.S.

PLAYGROUND 'A' - 'INFANT'

SCALE: 1" = 15'

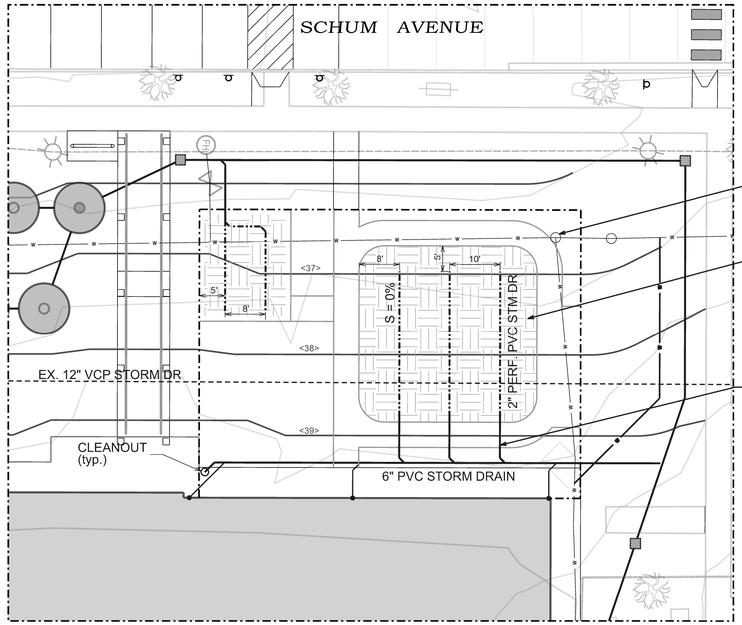

PLAYGROUND 'C' - 'PRE-KINDERGARTEN'

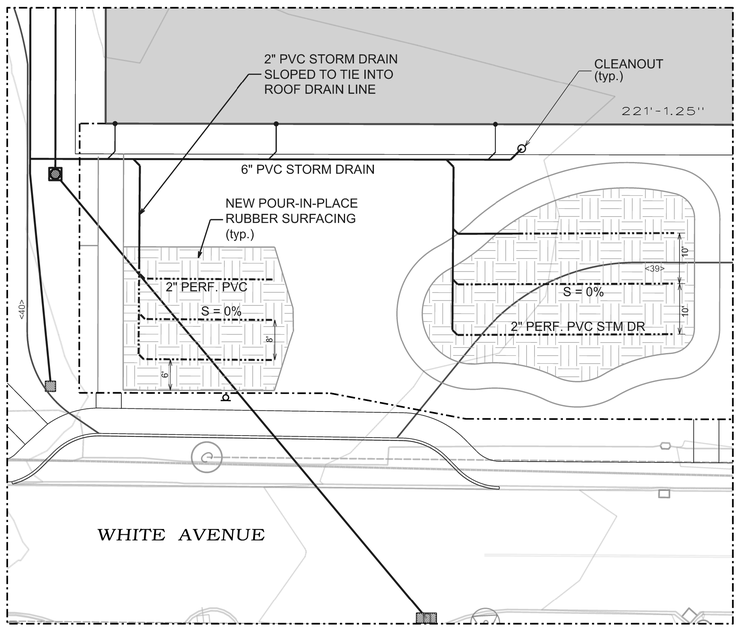

PLAYGROUND 'B' - 'TODDLER/PRESCHOOL'

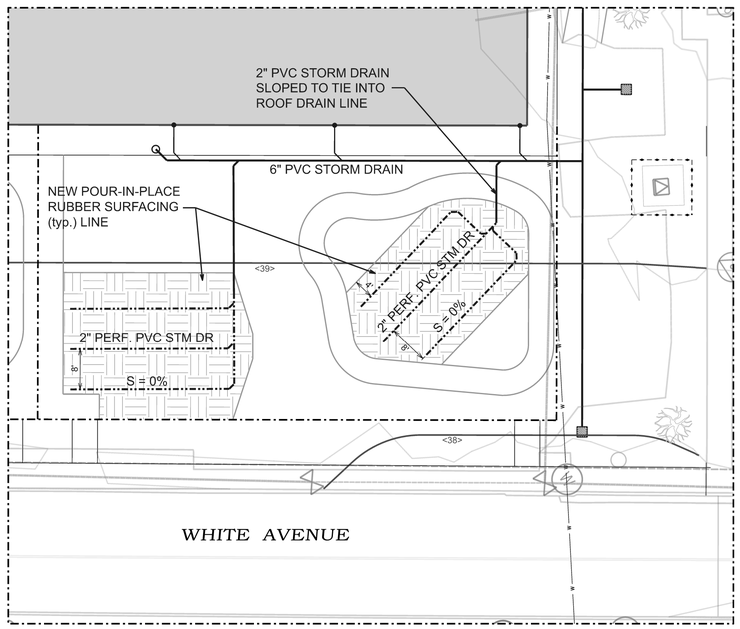

US Army Corps of Engineers ®

MARK	DESCRIPTION	DATE

DESIGNED BY: KW
DRAWN BY: KW
CHECKED BY:
SUBMITTED BY:
ISSUE DATE: July 2025
SOLICITATION NO.: W912DS23F0031
CONTRACT NO.: W912DS19D0007
SIZE: ANSI D

US ARMY CORPS OF ENGINEERS
NEW YORK DISTRICT
26 FEDERAL PLAZA
NEW YORK, NY 10278

CHILD DEVELOPMENT CENTER
USAG FORT HAMILTON, NEW YORK
PROJECT #75862

DETAILED PLAYGOUND DRAINAGE PLAN

SHEET ID
C-105A

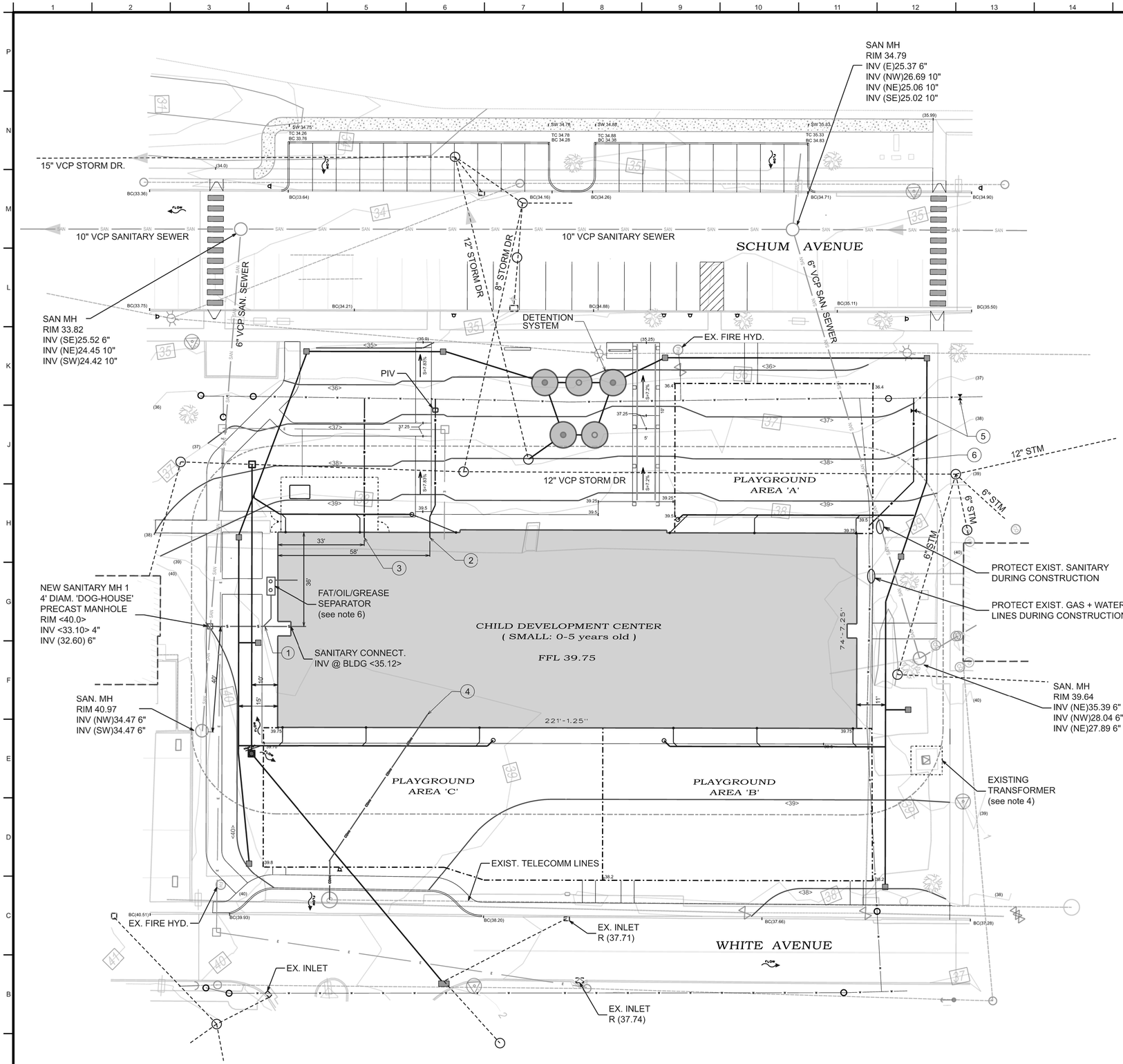

SCALE: 1" = 20'

SITE LAYOUT NOTES:

1. SEE SHEET C-103 FOR GENERAL NOTES.
2. ADJUST ALL EXISTING MH COVERS TO MEET NEW GRADING AS NEEDED.
3. COORDINATES SHOWN ARE TO CENTER OF DRAINS, MANHOLES AND CATCH BASINS, UNLESS OTHERWISE SHOWN ON PLAN VIEW.
4. EXISTING TRANSFORMER TO REMAIN. PROVIDE 7' CLF AROUND UNIT WITH SUFFICIENT SPACING AND DOUBLE SWING GATE FOR MAINTENANCE WORK. COORDINATE WITH FT. HAMILTON DPW FOR GATE LOCATION.
5. EXISTING SANITARY LINES FOR THE NEW CONNECTIONS ARE 6" VCP. THE NEW 4" PVC SANITARY CONNECTION WILL CONNECT AT A NEW MANHOLE. THE MANHOLE WILL BE A 4' DIAMETER PRECAST 'DOGHOUSE' MANHOLE BUILT ON THE EXISTING SANITARY. CONTRACTOR TO CONFIRM INVERT OF PIPE PRIOR TO ANY SANITARY WORK.
6. CONTRACTOR SHALL PROVIDE A 180 lb (90 gpm) FAT, OIL, AND GREASE (FOG) SEPARATOR THAT MEETS THE NYC BUILDING CODE AND NYC DEP TITLE 15 REQUIREMENTS FOR F.O.G. DISCHARGE TO THE PUBLIC SEWER SYSTEM. CONTRACTOR TO VERIFY FIXTURES AND SIZING PRIOR TO INSTALL.
7. NEW FIRE CONN. FALLS WITHIN THE WALKWAY ENTRANCE. LINE TO BE SHIFTED 2' MIN. TO THE NORTH SO THE PIV VALVE FALLS WITHIN GRASS AREA.
8. REFER TO THE ELECTRIC SHEETS FOR SITE ELECTRIC WORK.
9. REFER TO ARCHITECTURAL PLANS FOR MECHANICAL YARD LAYOUT/DESIGN.
10. EXISTING WATER VALVE AND MAIN TO BE RELOCATED OUTSIDE OF THE NEW PLAYGROUND AREA. TWO VALVES TO BE INSTALLED AND NEW DIP (cl. 52) TO BE INSTALLED (DIAMETER TO MATCH EXISTING PIPE, TO BE CONFIRMED BY CONTRACTOR PRIOR TO WATER MAIN WORK). ALL SHUTDOWNS TO BE COORDINATED WITH THE COR AND FT. HAMILTON DPW.

UTILITY CALL-OUTS:	
1: NEW 4" PVC SANITARY CONN. L = 30.65' (to bldg) @ 6.59%	4: NEW TELE/COMM CONN.
2: NEW 4" DIP FIRE CONN. (see note #7)	5: NEW WATER MAIN GATE VALVE
3: NEW 3" DIP WATER CONN.	6: NEW DIP (cl52) WATER MAIN (diam. to be confirmed in field)

US Army Corps of Engineers ®

MARK	DESCRIPTION	DATE

DESIGNED BY: KW
DRAWN BY: KW
CHECKED BY:
ISSUE DATE: July 2025
SOLICITATION NO.: W912DS23F0031
CONTRACT NO.: W912DS19DD007
SUBMITTED BY:
SIZE: ANSI D

US ARMY CORPS OF ENGINEERS
NEW YORK DISTRICT
26 FEDERAL PLAZA
NEW YORK, NY 10278

CHILD DEVELOPMENT CENTER
USAG FORT HAMILTON, NEW YORK
PROJECT #75662

UTILITY PLAN

SHEET ID

C-106

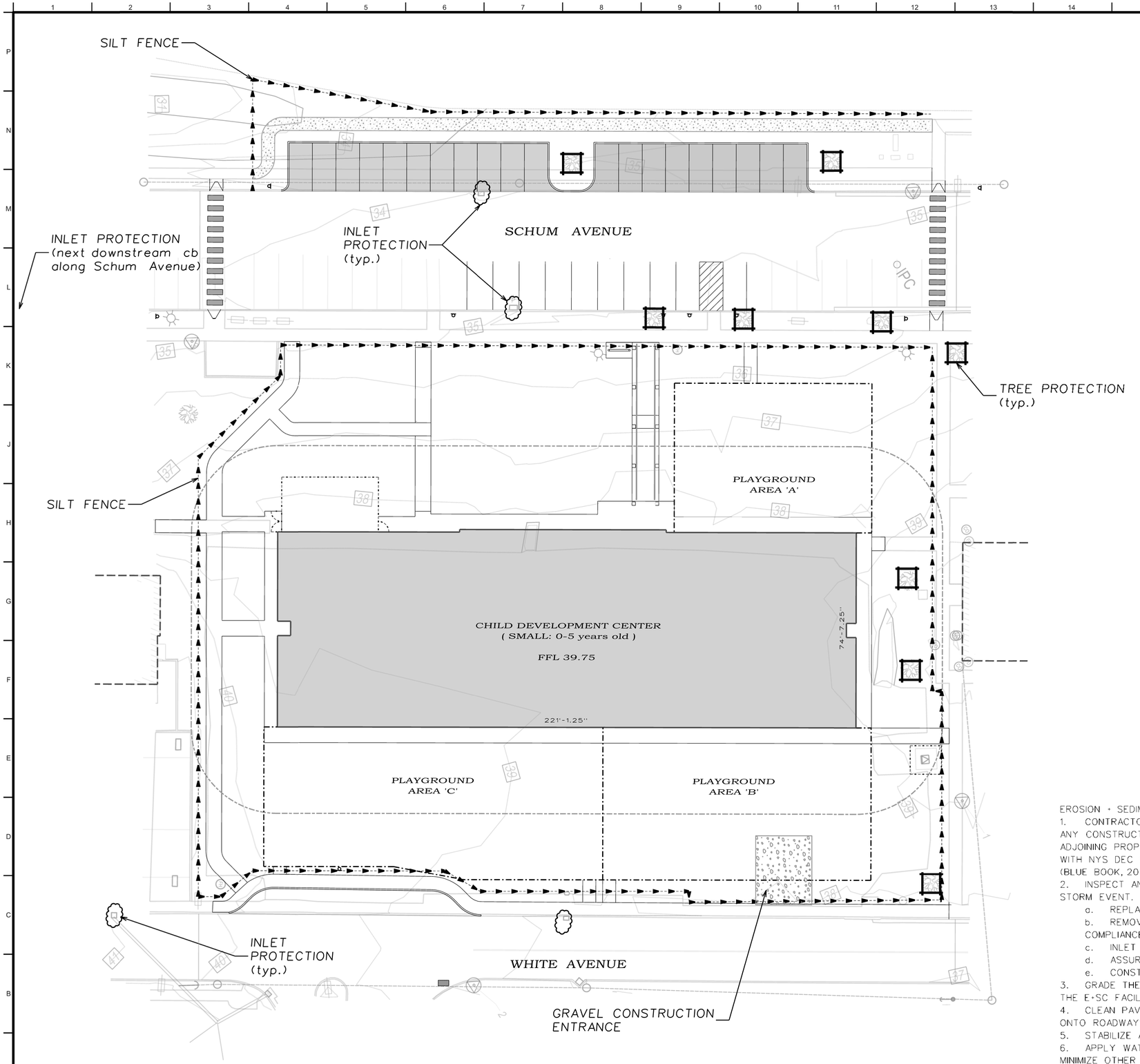

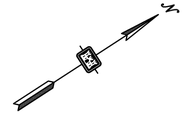

SCALE: 1" = 20'

EROSION + SEDIMENT CONTROL NOTES:

1. CONTRACTOR TO INSTALL EROSION AND SEDIMENT CONTROL MEASURES PRIOR TO ANY CONSTRUCTION ACTIVITIES. ALL MEASURES TO BE PLACED TO PREVENT DAMAGE TO ADJOINING PROPERTIES. ALL MEASURES TO BE INSTALLED AND MAINTAINED IN CONFORMANCE WITH NYS DEC STANDARDS AND SPECIFICATIONS FOR EROSION + SEDIMENT CONTROL (BLUE BOOK, 2016).
2. INSPECT AND MAINTAIN ALL E+SC MEASURES ON A WEEKLY BASIS AND AFTER EVERY STORM EVENT. MAINTENANCE INCLUDES BUT NOT LIMITED TO:
   a. REPLACEMENT OR REPAIR OF DAMAGED SILT FENCE
   b. REMOVAL OF SEDIMENT FROM ALL MEASURES SUCH THAT THEY REMAIN IN COMPLIANCE WITH NYS DEC
   c. INLET PROTECTION DEVICES & MEASURES
   d. ASSURANCE OF GOOD GRASS GROWTH
   e. CONSTRUCTION ACCESS ROADS
3. GRADE THE SITE AND EMPLOY MEASURES TO DIRECT ALL STORM WATER RUNOFF TO THE E+SC FACILITIES.
4. CLEAN PAVED ROADWAYS DURING CONSTRUCTION TO PREVENT SEDIMENT TRACKING ONTO ROADWAYS.
5. STABILIZE ALL DRAINAGE OUTLETS BEFORE DISCHARGE POINTS BECOME OPERATIONAL.
6. APPLY WATER OR A DUST PALLIATIVE TO MINIMIZE DUST AND EMPLOY MEASURES TO MINIMIZE OTHER CONSTRUCTION NUISANCES THROUGHOUT THE PROJECT.
7. CONCRETE TRUCK WASHOUT AREAS WILL BE MAINTAINED ON A CONTINUAL BASIS. THE LOCATION TO BE COORDINATED WITH THE COR.

US Army Corps of Engineers ®

MARK	DESCRIPTION	DATE

DESIGNED BY: KW
DRAWN BY: KW
CHECKED BY:
SUBMITTED BY:
ISSUE DATE: July 2025
SOLICITATION NO.: W912DS23F0031
CONTRACT NO.: W912DS19D0007
SIZE: ANSI D

US ARMY CORPS OF ENGINEERS
NEW YORK DISTRICT
26 FEDERAL PLAZA
NEW YORK, NY 10278

CHILD DEVELOPMENT CENTER
USAG FORT HAMILTON, NEW YORK
PROJECT #75662

EROSION + SEDIMENT CONTROL PLAN

SHEET ID
C-107

VERT: SCALE: 1" = 4'
HOR. SCALE: 1" = 20'

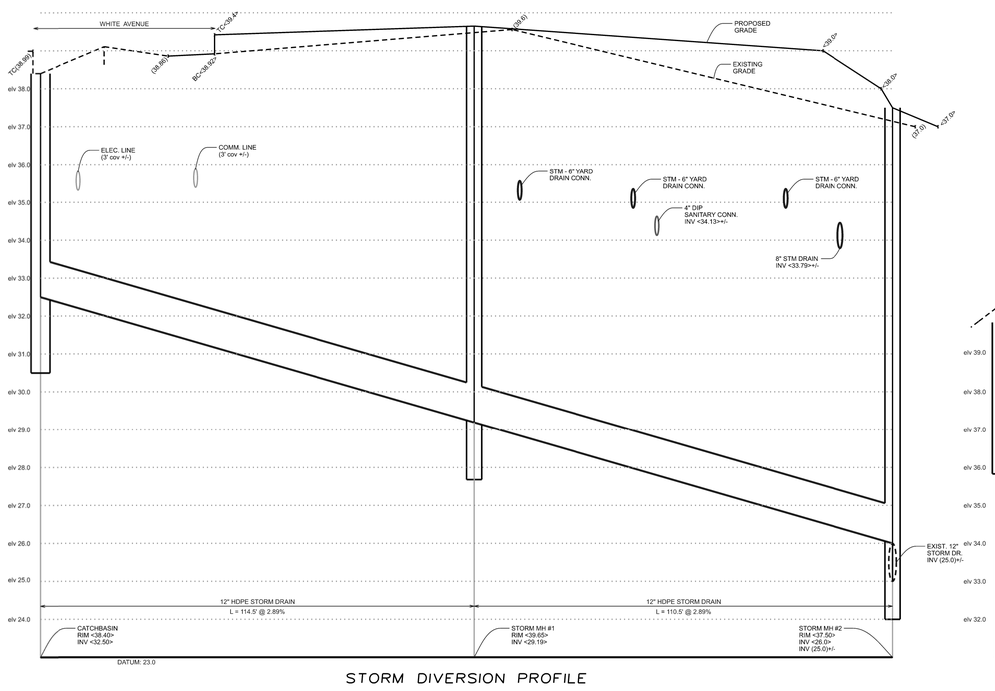

STORM DIVERSION PROFILE

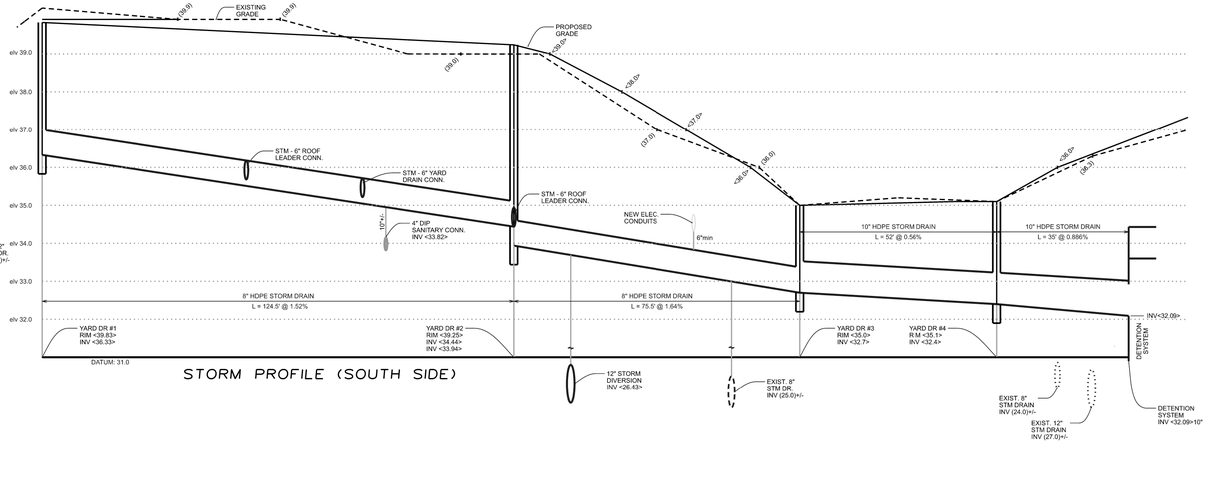

STORM PROFILE (SOUTH SIDE)

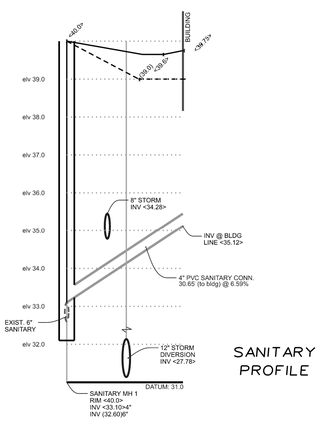

SANITARY PROFILE

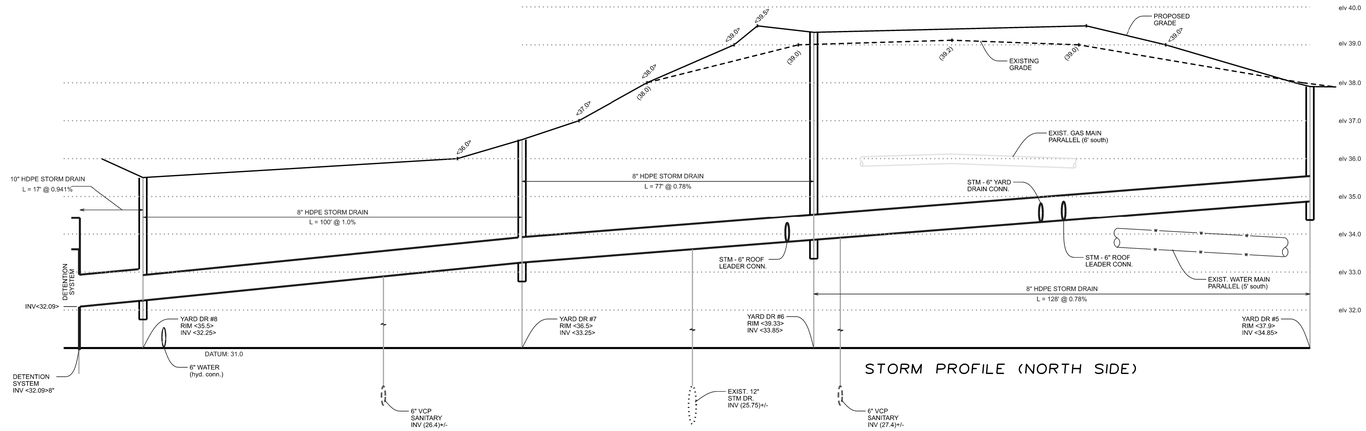

STORM PROFILE (NORTH SIDE)

US Army Corps of Engineers ®

MARK	DESCRIPTION	DATE

DESIGNED BY: KW
DRAWN BY: KW
CHECKED BY:
SUBMITTED BY:
ISSUE DATE: July 2025
SOLICITATION NO.: W912DS23F0031
CONTRACT NO.: W912DS19DO007
SIZE: ANSI D

US ARMY CORPS OF ENGINEERS
NEW YORK DISTRICT
26 FEDERAL PLAZA
NEW YORK, NY 10278

CHILD DEVELOPMENT CENTER
USAG FORT HAMILTON, NEW YORK
PROJECT #75862

SANITARY + STORM PROFILES

SHEET ID
C-201

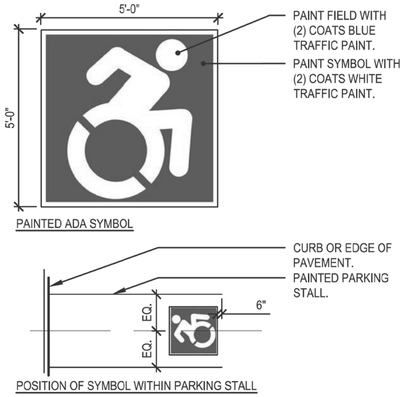

1 C-104 **ADA PAVEMENT SYMBOL** N.T.S.

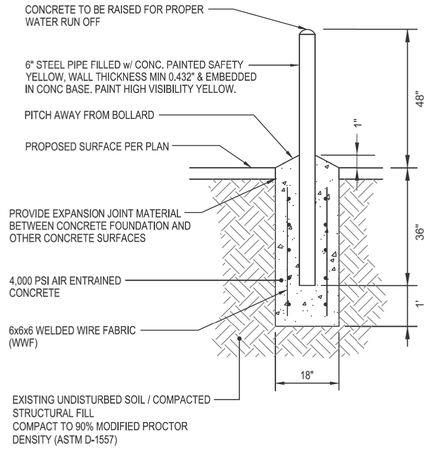

2 C-104 **BOLLARD** N.T.S.

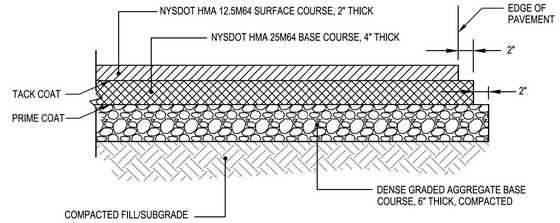

3 C-104 **BITUMINOUS PAV. DETAIL** N.T.S.

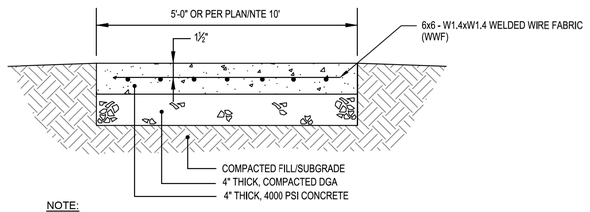

NOTE:

1. EXPANSION JOINTS 1/2" WIDE PREMOLDED BITUMINOUS MATERIAL SHALL BE INSTALLED AT 10' INTERVALS, AND AGAINST ALL HARD SURFACES, CONTRACTION JOINTS SPACED AT EQUAL INTERVALS, 5' MAXIMUM LENGTH, LENGTH TO WIDTH RATIO SHALL NOT EXCEED 2:1

4 C-104 **SIDEWALK DETAIL** N.T.S.

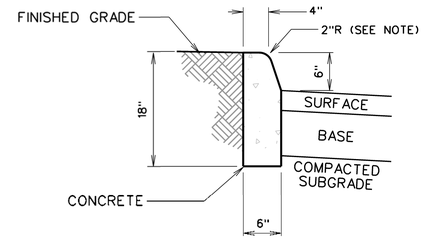

NOTE: STANDARD CURB SHAPE OF THE CURB TO BE MODIFIED AS NEEDED TO MATCH INTO EXISTING CURBS.

5 C-104 **CONCRETE CURB DETAIL** N.T.S.

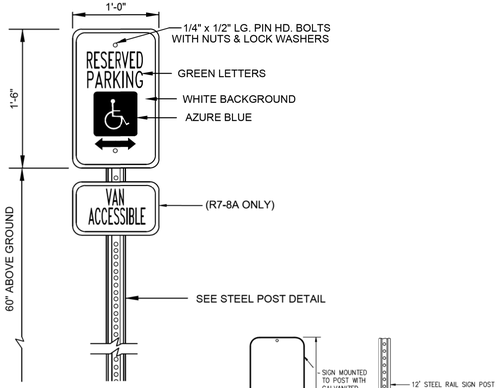

6 C-104 **PARKING SIGN DETAIL** N.T.S.

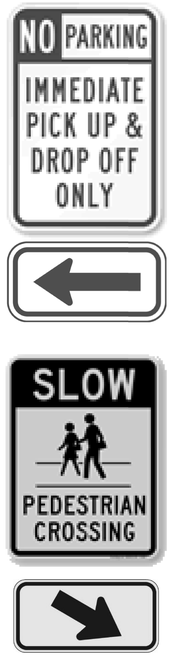

NOTES:
1. SIGN PANELS SHALL BE SINGLE SHEET ALUMINUM, 0.08" min THICKNESS

2. SIGN PANELS SHALL BE FASTENED DIRECTLY TO THE POST. FASTEN TO SQUARE TUBE POSTS WITH TWO 1/4" DIAM. - 20 UNC STOVE BOLTS

3. ALUMINUM POSTS SHALL BE 1/8" TUBING.

4. ALL SIGNS SHALL CONFORM TO THE CURRENT EDITION OF THE "MANUAL ON UNIFORM TRAFFIC CONTROL DEVICES" OR PER LOCAL STANDARDS.

5. SIGNS SHALL BE HI-INTENSITY REFLCTIVE ALUMINUM.

6. PICK UP/DROP OFF SIGNS TO BE PLACED ON EACH END OF DESIGNATD SPACES WITH DIRECTIONAL ARROW SIGN.

7. PEDESTRIAN CROSSING SIGNS TO BE PLACED ON EACH SIDE OF CROSSWALK, IN BOTH TRAFFICDIRECTIONS, WITH DIRECTIONAL ARROW SIGN.

7 C-104 **SIGNAGE** N.T.S.

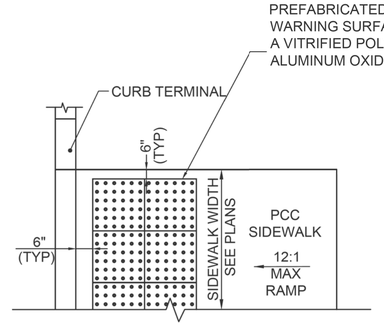

PLAN

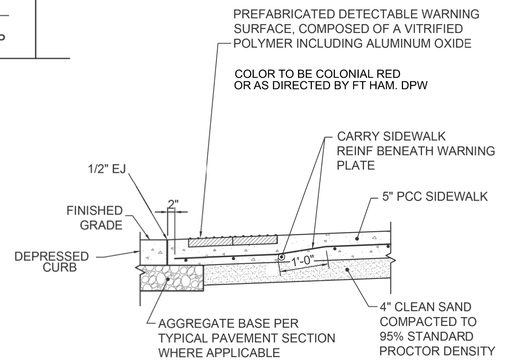

SECTION

8 C-104 **ADA CURB RAMP** N.T.S.

US Army Corps of Engineers ®

MARK	DESCRIPTION	DATE

DESIGNED BY: KW
DRAWN BY: KW
CHECKED BY:
SUBMITTED BY:
ISSUE DATE: July 2025
SOLICITATION NO.: W912DS23F0031
CONTRACT NO.: W912DS19D0007
SIZE: ANSI D

US ARMY CORPS OF ENGINEERS
NEW YORK DISTRICT
26 FEDERAL PLAZA
NEW YORK, NY 10278

CHILD DEVELOPMENT CENTER
USAG FORT HAMILTON, NEW YORK
PROJECT #75662

SITE DETAILS - SH. #1

SHEET ID
C-501

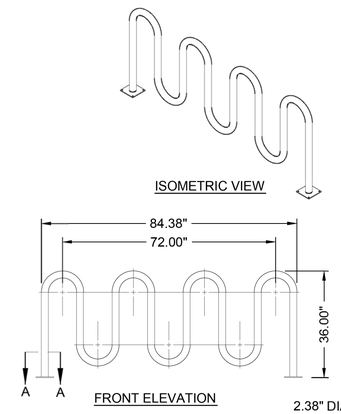

2X 6" X 6" X .25" FLANGE MOUNTING PLATE WITH 4 5/8" MOUNTING HOLES

NOTE:
1. SEE DETAIL #4/C-501 FOR CONCRETE PAD.
2. INSTALLATION TO BE COMPLETED IN ACCORDANCE WITH MANUFACTURER'S SPECIFICATIONS.
3. BIKE RACK CAPACITY: 9 BIKES.
4. BLACK POWDER COATED FINISH.

1 / C-104 **BIKE RACK**
N.T.S.

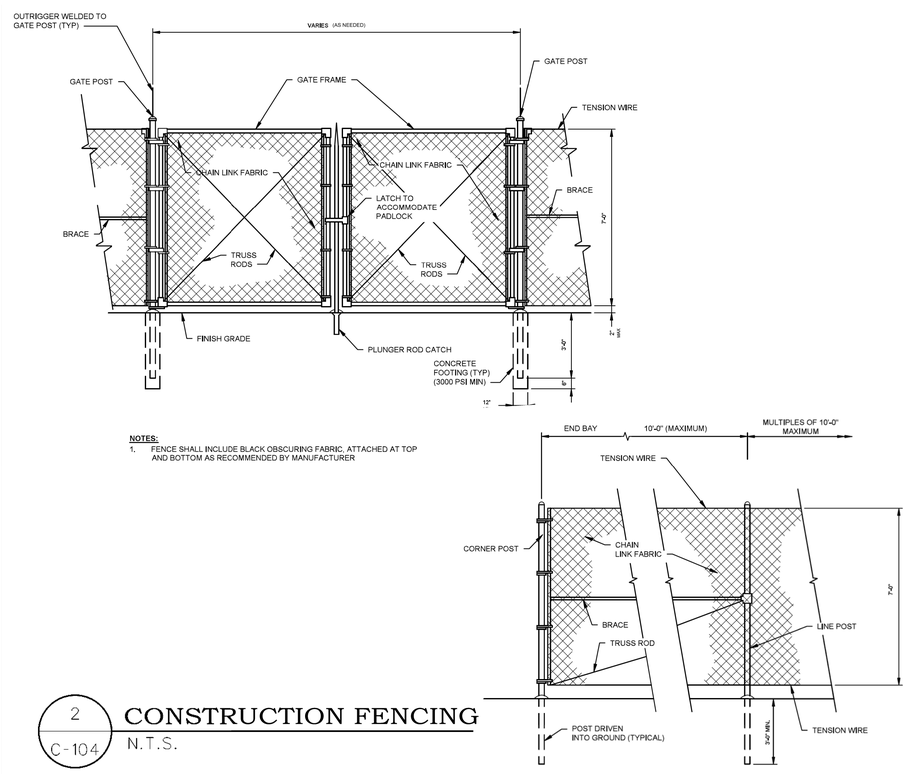

NOTES:
1. FENCE SHALL INCLUDE BLACK OBSCURING FABRIC, ATTACHED AT TOP AND BOTTOM AS RECOMMENDED BY MANUFACTURER

2 / C-104 **CONSTRUCTION FENCING**
N.T.S.

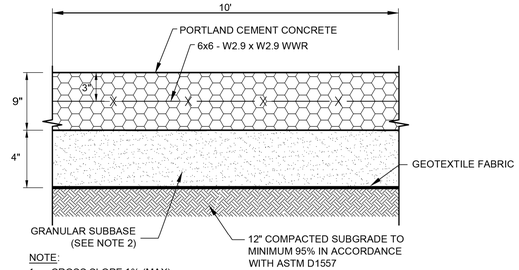

NOTE:
1. CROSS SLOPE 1% (MAX)
2. GRANULAR SUBBASE SHALL COMPLY WITH NYSDOT SECTION 733-04, TYPE 2 MATERIAL
3. EXPANSION JOINTS PROVIDED ALL AROUND CONCRETE PAVEMENT SECTION
4. CONTRACTION JOINT SPACING AT 20' MAX.

3 / C-104 **CONCRETE PAVEMENT**
N.T.S.

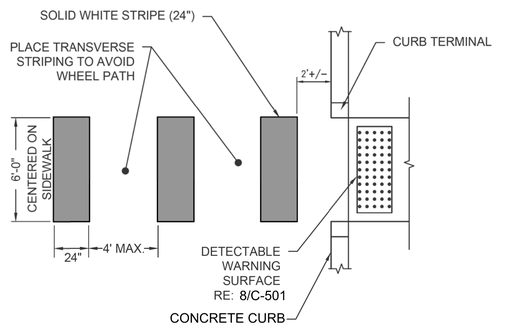

4 / C-104 **CROSSWALK STRIPING**
N.T.S.

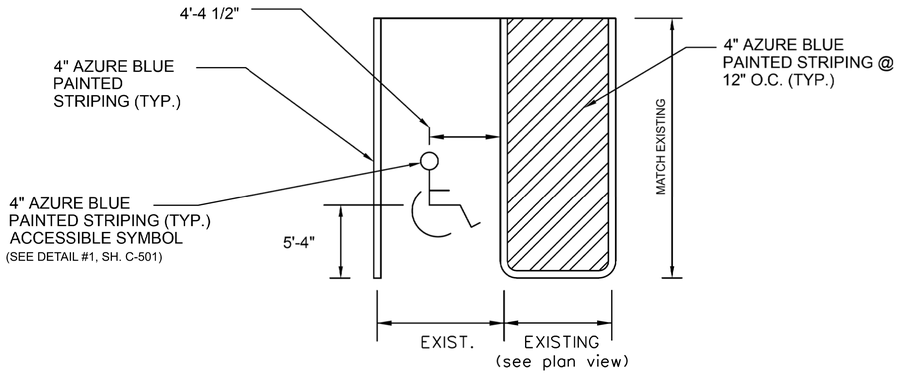

5 / C-104 **ADA PARKING PAINT LINES**
N.T.S.

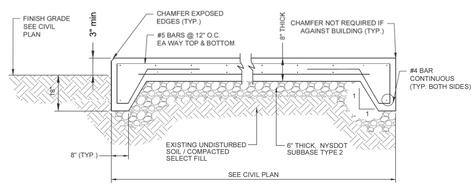

NOTES:
1. PROVIDE EXPANSION JOINTS, 1/2" WIDE PREMOLDED BITUMINOUS MATERIAL AGAINST ALL HARD SURFACES AND AT LOCATIONS SO THE LENGTH TO WIDTH RATIO DOES NOT EXCEED 2 TIMES.
2. PROVIDE PIPE SLEEVES OR OPENINGS IN CONC PAD FOR ANY UTILITIES AS PER EACH DISCIPLINES DRAWINGS.

6 / C-104 **CONC. UTILITY PAD DETAIL**
N.T.S.

US Army Corps of Engineers ®

MARK	DESCRIPTION	DATE

DESIGNED BY: KW
DRAWN BY: KW
CHECKED BY:
SUBMITTED BY:
ISSUE DATE: July 2025
SOLICITATION NO.: W912DS23F0031
CONTRACT NO.: W912DS19D0007
SIZE: ANSI D

US ARMY CORPS OF ENGINEERS
NEW YORK DISTRICT
26 FEDERAL PLAZA
NEW YORK, NY 10278

CHILD DEVELOPMENT CENTER
USAG FORT HAMILTON, NEW YORK
PROJECT #75862

SITE DETAILS - SH. #2

SHEET ID
C-502

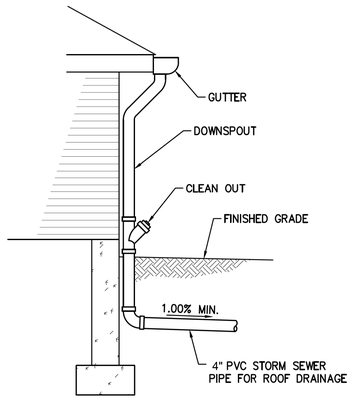

NOTE: CLEAN OUTS ARE REQUIRED AT THE BASE OF ALL EXTERIOR DOWNSPOUTS AND INTERIOR CONDUCTORS WHEN THEY CONNECT TO A BUILDING STORM DRAIN OR BUILDING STORM SEWER

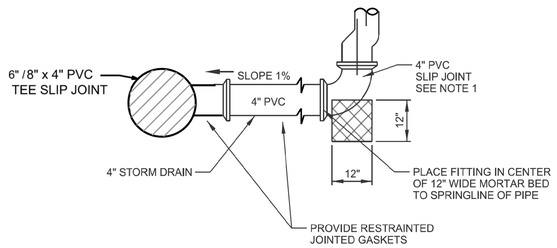

1 / C-105 ROOF LEADER DETAIL
N.T.S.

UTILITY	TRACER WIRE	WARNING TAPE	MIN. BURY DEPTH
WATER	YES	YES	4'-0"
SAN. SEWER	YES	YES	5' - 6"
ELECTRIC	YES	YES	3' - 0"
GEOTHERMAL	YES	YES	6' - 0"
GAS	YES	YES	2' - 6"
HVAC	YES	YES	NA
COMM. ENCASED DUCTS	YES	YES	2' - 0"
COMM. CONDUITS	YES	YES	2' - 6"
FORCE MAIN	YES	YES	6' - 0"

NOTES:

1. TRENCH DEPTHS, WIDTHS, SHEETING, SHORING, BRACING AND CUTBACK SLOPES TO BE DETERMINED BY THE CONTRACTOR AND SHALL COMPLY WITH O.S.H.A., NEW YORK STATE DEPARTMENT OF LABOR, NEW YORK STATE INDUSTRIAL CODE AND ALL OTHER APPLICABLE SAFETY STANDARDS.
2. PROVIDE TRACER WIRE 1' - 0" ABOVE OUTSIDE DIAMETER OF UTILITY AND WARNING TAPE 1' -6" BELOW FINISHED GRADE. TRACER WIRE SHALL BE INSTALLED IN CONDUIT.
3. PROVIDE TRACER WIRE TEST BOX EVERY 500 FEET EITHER FLUSH OR POLE MOUNTED. SEE DETAIL 3, C-503

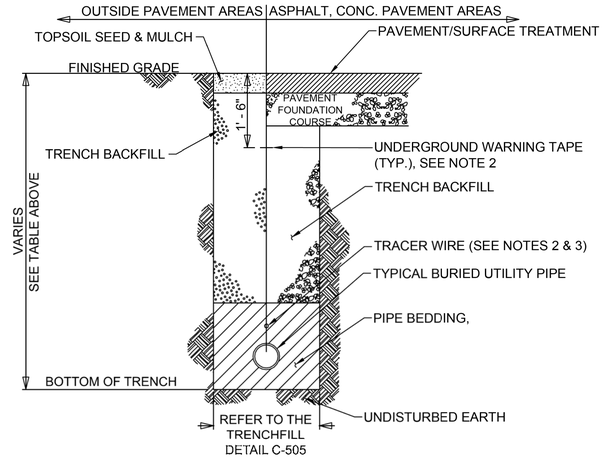

2 / C-105 UTILITY TRENCH DETAIL
N.T.S.

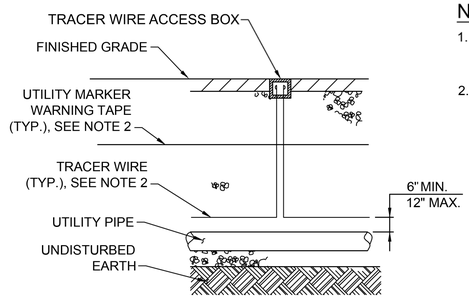

NOTES:

1. TRACER WIRE BOXES SHALL BE INSTALLED AT INTERVALS OF 500' MAX ALONG UTILITY PIPE AND BY EACH VALVE BOX LOCATION.
2. REFER TO DETAIL 2, C-503 FOR TRACER WIRE AND WARNING TAPE REQUIREMENTS.

3 / C-105 TRACER WIRE DETAIL
N.T.S.

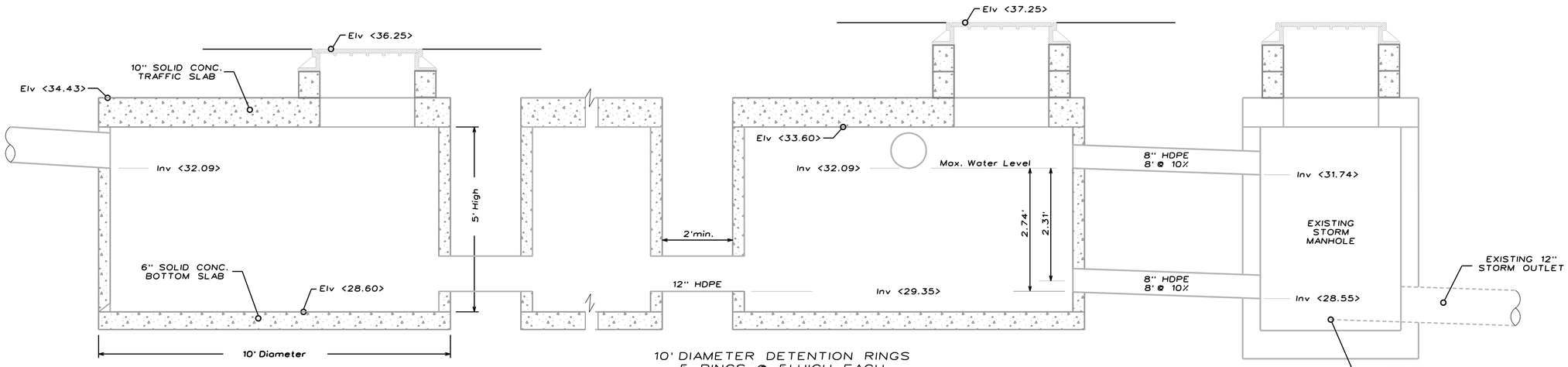

10' DIAMETER DETENTION RINGS
5 RINGS @ 5' HIGH EACH

NOTE:
THREE RINGS TO HAVE OPEN GRATE COVERS
(2 RINGS WITH INLET PIPES TO BE AT <36.25>
+ RING WITH OUTLET PIPE TO BE AT <37.25>).
RINGS WITH SOLID COVERS TO BE SET AT
PROPOSED GRADE (as noted on C-105)

4 / C-105 DETENTION SYSTEM DETAIL
N.T.S.

US Army Corps of Engineers ®

MARK	DESCRIPTION	DATE

DESIGNED BY: KW
DRAWN BY: KW
CHECKED BY:
SUBMITTED BY:
ISSUE DATE: July 2025
SOLICITATION NO.: W912DS23F0031
CONTRACT NO.: W912DS19D0007
SIZE: ANSI D

US ARMY CORPS OF ENGINEERS
NEW YORK DISTRICT
26 FEDERAL PLAZA
NEW YORK, NY 10278

CHILD DEVELOPMENT CENTER
USAG FORT HAMILTON, NEW YORK
PROJECT #75662

UTILITY DETAILS - SH. #1

SHEET ID
C-503

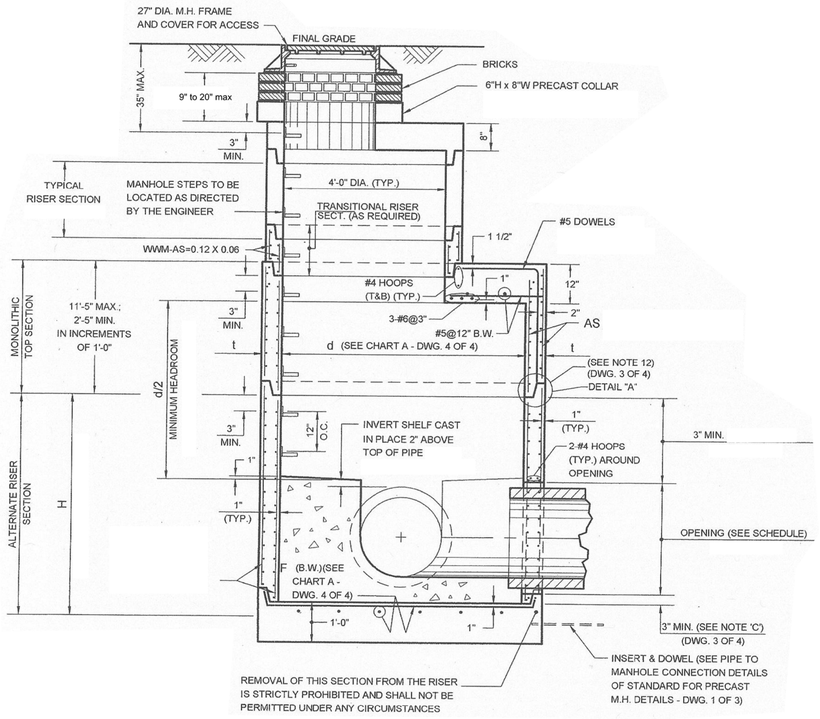

1 C-105 C-106

MANHOLE DETAIL

N.T.S.

4' PRECAST MANHOLE TO FOLLOW NYC DEP STANDARDS. REFER TO NYC DEP STANDARDS FOR ANY ADDITIONAL INFO OR FOR ANY REFERENCES NOTED IN DETAIL.

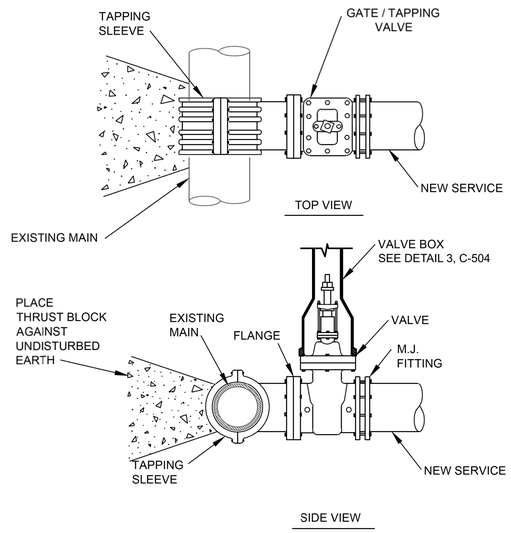

NOTES:
1. POURED CONCRETE SHALL NOT CONTACT BOLTS OR ENDS OF MECHANICAL JOINT FITTINGS.
2. 3000 PSI MIN. SOLID CONCRETE BLOCK SHALL BE USED AS PIPE AND VALVE SUPPORTS.

2 C-106

WATER SERVICE CONNECTION

N.T.S.

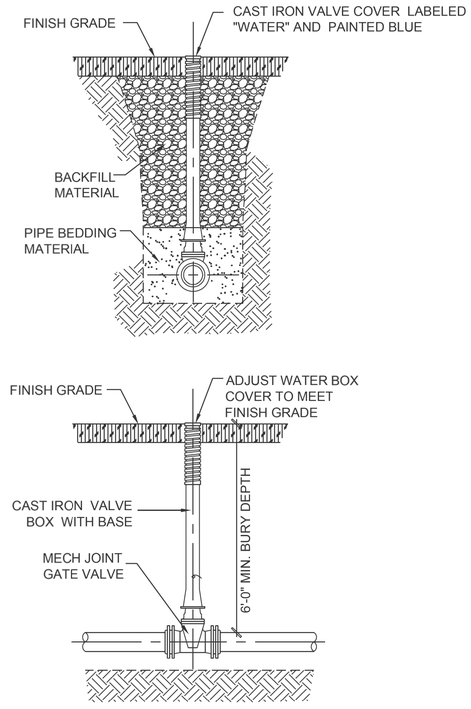

3 C-106

WATER - VALVE BOX

N.T.S.

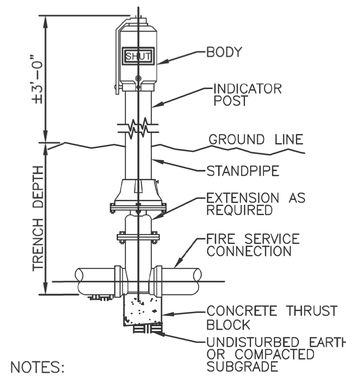

NOTES:
1. POST INDICATOR VALVE TO BE EQUIPPED WITH A LOCKING MECHANISM TO MAINTAIN POSITION (OPEN OR CLOSED).
2. CONTRACTOR TO VERIFY VALVE ROTATION DIRECTION WITH FIRE DEPARTMENT.
3. REFER TO MANUFACTURER'S REQUIREMENTS FOR THRUST BLOCK REQUIREMENTS.

4 C-106

PIV DETAIL

N.T.S.

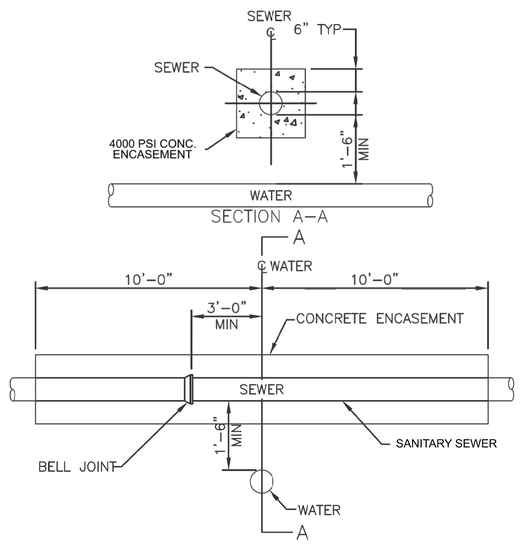

5 C-106

WATER CROSSING UNDER SANITARY

N.T.S.

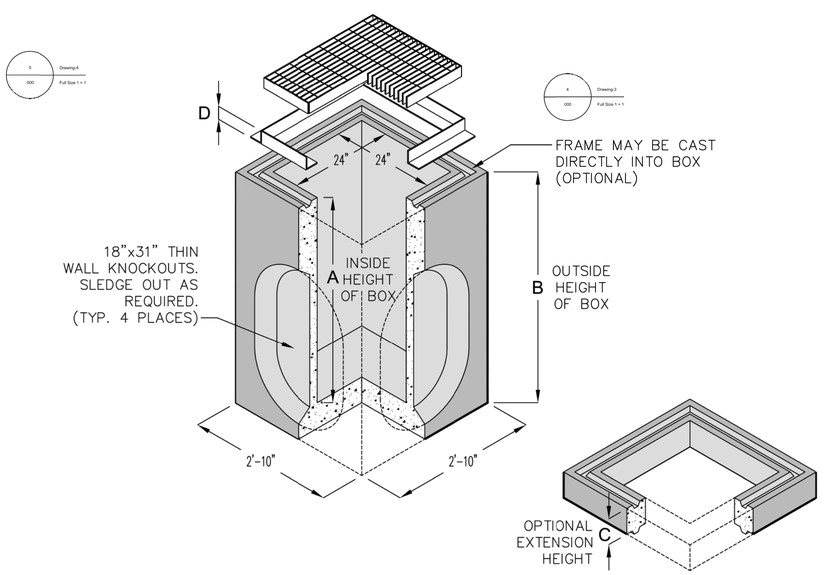

6 C-105

YARD DRAIN DETAIL

N.T.S.

US Army Corps of Engineers ®

MARK	DESCRIPTION	DATE

DESIGNED BY: KW
DRAWN BY: KW
CHECKED BY:
SUBMITTED BY:
ISSUE DATE: July 2025
SOLICITATION NO.: W912DS23F0031
CONTRACT NO.: W912DS19D0007
SIZE: ANSI D

US ARMY CORPS OF ENGINEERS
NEW YORK DISTRICT
26 FEDERAL PLAZA
NEW YORK, NY 10278

CHILD DEVELOPMENT CENTER
USAG FORT HAMILTON, NEW YORK
PROJECT #75662

UTILITY DETAILS - SH. #2

SHEET ID

C-504

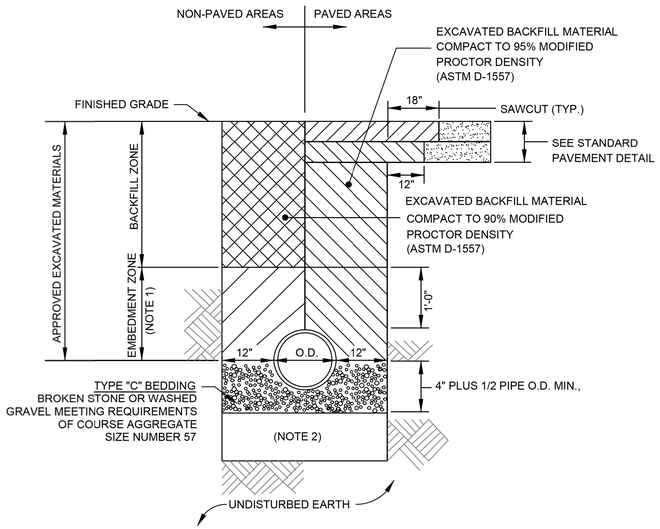

NOTES:

1. BACKFILL IN EMBEDMENT ZONE SHALL BE PLACED BY HAND IN 6-INCH LIFTS ON BOTH SIDES OF PIPE TO PREVENT DISPLACEMENT. COMPACT TO 95% MAX. DRY DENSITY IN ACCORDANCE WITH ASTM D-1557.
2. IF UNSUITABLE SOIL MATERIALS ARE ENCOUNTERED, REMOVE AND REPLACE WITH 12 INCHES ADDITIONAL BEDDING OR AS DIRECTED BY CONTRACTING OFFICER.

1 C-105 C-106 — PIPE BEDDING DETAIL
N.T.S.

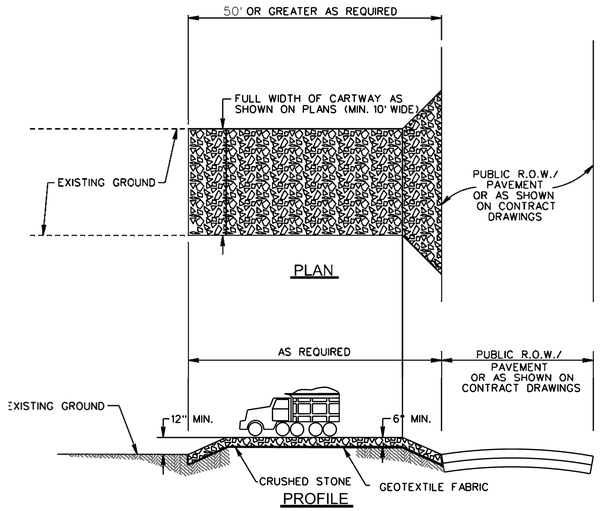

NOTES:

1. PROVIDE APPROPRIATE TRANSITION BETWEEN STABILIZED CONSTRUCTION ENTRANCE AND PUBLIC R.O.W.
2. PLACE STABILIZED CONSTRUCTION ENTRANCE AT LOCATION(S) AS SHOWN ON THE EROSION AND SEDIMENTATION CONTROL PLANS.
3. STONE SIZE SHALL BE ASTM C-33, SIZE NO. 2 OR 3, CRUSHED STONE.
4. THE THICKNESS OF THE STABILIZED CONSTRUCTION ENTRANCE SHALL NOT BE LESS THAN 6".
5. THE WIDTH AT THE EXISTING PAVEMENT SHALL NOT BE LESS THAN THE FULL WIDTH OF POINTS OF INGRESS AND EGRESS.
6. THE STABILIZED CONSTRUCTION DRIVEWAY SHALL BE MAINTAINED IN A CONDITION WHICH WILL PREVENT TRACKING OR FLOWING OF SEDIMENT ONTO THE PUBLIC R.O.W./PAVEMENT. THIS REQUIRES PERIODIC TOP DRESSING WITH ADDITIONAL STONE OR ADDITIONAL LENGTH AS CONDITIONS DEMAND AND REPAIR AND/OR CLEANOUT OF ANY MEASURE USED TO TRAP SEDIMENT OR AS MAY BE REQUIRED BY THE SOIL CONSERVATION DISTRICT AS CONDITIONS DEMAND.
7. ALL SEDIMENT SPILLED, DROPPED, WASHED, OR TRACKED ONTO THE PUBLIC R.O.W./PAVEMENT MUST BE REMOVED IMMEDIATELY AND AT THE DAYS END.
8. WHERE TRACKING OF SOIL ONTO ROADWAYS IS A CONTINUAL OCCURRENCE, THE CONTRACTOR WILL BE REQUIRED TO BROOMSWEEP THE ROADWAY AT TWO-HOUR INTERVALS MINIMUM AND PRIOR TO LEAVING THE CONSTRUCTION SITE AT THE DAYS END. IF TRACKING PADS AND SWEEPING DO NOT CONTROL TRACKING, A TRUCK WASH SHALL BE ESTABLISHED OR HAULING OPERATIONS WILL BE STOPPED

2 C-107 — CONSTRUCTION ENTRANCE
N.T.S.

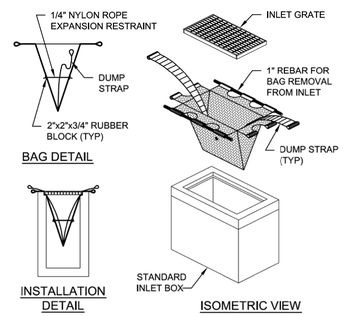

NOTES

1. INLET FILTER BAG SHALL BE SIZED TO FIT STANDARD INLET BOX. INLET FILTER BAG DEPTH SHALL BE 3 FEET MINIMUM.
2. INLET FILTER BAG SHALL TRAP ALL PARTICLES LARGER THAN 150 MICRONS.
3. INLET FILTER BAG SHALL BE INSTALLED ACCORDING TO MANUFACTURER'S SPECIFICATIONS.
4. INLET FILTER BAG SHALL BE INSPECTED ON A WEEKLY BASIS AND AFTER EACH RUNOFF EVENT.
5. INLET FILTER BAG SHALL BE CLEANED AND/OR REPLACED WHEN THE BAG IS HALF FULL.
6. DAMAGED INLET FILTER BAG SHALL BE REPLACED IMMEDIATELY.
7. NEEDED REPAIRS SHALL BE INITIATED IMMEDIATELY AFTER EACH INSPECTION.

3 C-107 — INLET PROTECTION
N.T.S.

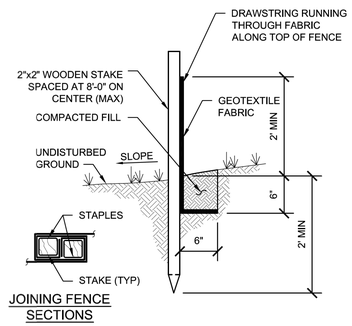

NOTES

1. THE BARRIER SHALL BE CONSTRUCTED SO WATER CANNOT BYPASS THE BARRIER AROUND THE ENDS.
2. INSPECTION SHALL BE FREQUENT AND REPAIR OR REPLACEMENT SHALL BE MADE PROMPTLY AS NEEDED.
3. THE BARRIER SHALL BE REMOVED WHEN THE CONTRIBUTING DRAINAGE AREA HAS BEEN STABILIZED SO AS NOT TO BLOCK OR IMPEDE STORM FLOW OR DRAINAGE.
4. FENCE POSTS SHALL BE SPACED 8 FEET CENTER-TO-CENTER OR CLOSER. THEY SHALL EXTEND AT LEAST 2 FEET INTO THE GROUND AND EXTEND AT LEAST 2 FEET ABOVE GROUND. POSTS SHALL BE CONSTRUCTED OF HARDWOOD WITH A MINIMUM DIAMETER THICKNESS OF 1 1/2 INCHES.
5. A GEOTEXTILE FABRIC, RECOMMENDED FOR SUCH USE BY MANUFACTURER, SHALL BE BURIED AT LEAST 6 INCHES DEEP INTO THE GROUND. THE FABRIC SHALL EXTEND AT LEAST 2 FEET ABOVE THE GROUND THE FABRIC MUST BE SECURELY FASTENED TO THE POSTS USING A SYSTEM CONSISTING OF METAL FASTNERS (NAILS OR STAPLES) AND A HIGH STRENGTH REINFORCEMENT MATERIAL (NYLON WEBBING, GROMMETS, WASHERS ETC.) PLACED BETWEEN THE FASTNER AND THE GEOTEXTILE FABRIC. THE FASTENING SYSTEM SHALL RESIST TEARING AWAY FROM THE POST. THE FABRIC SHALL INCORPORATE A DRAWSTRING IN THE TOP PORTION OF THE FENCE FOR ADDED STRENGTH.

4 C-107 — SILT FENCE
N.T.S.

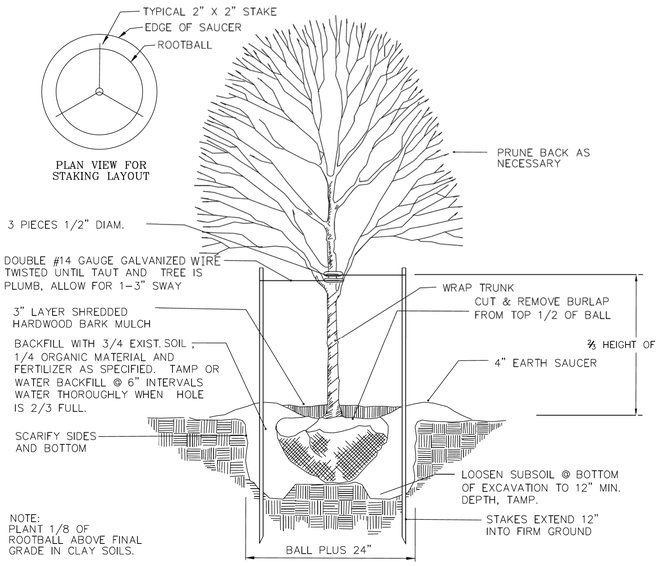

5 C-107 — TREE PROTECTION DETAIL
N.T.S.

US Army Corps of Engineers ®

MARK	DESCRIPTION	DATE

DESIGNED BY: KW
DRAWN BY: KW
CHECKED BY:
SUBMITTED BY:
ISSUE DATE: July 2025
SOLICITATION NO.: W912DS23F0031
CONTRACT NO.: W912DS19DD007
SIZE: ANSI D

US ARMY CORPS OF ENGINEERS
NEW YORK DISTRICT
26 FEDERAL PLAZA
NEW YORK, NY 10278

CHILD DEVELOPMENT CENTER
USAG FORT HAMILTON, NEW YORK
PROJECT #75662

EROSION + SEDIMENT CONTROL DETAILS

SHEET ID
C-505

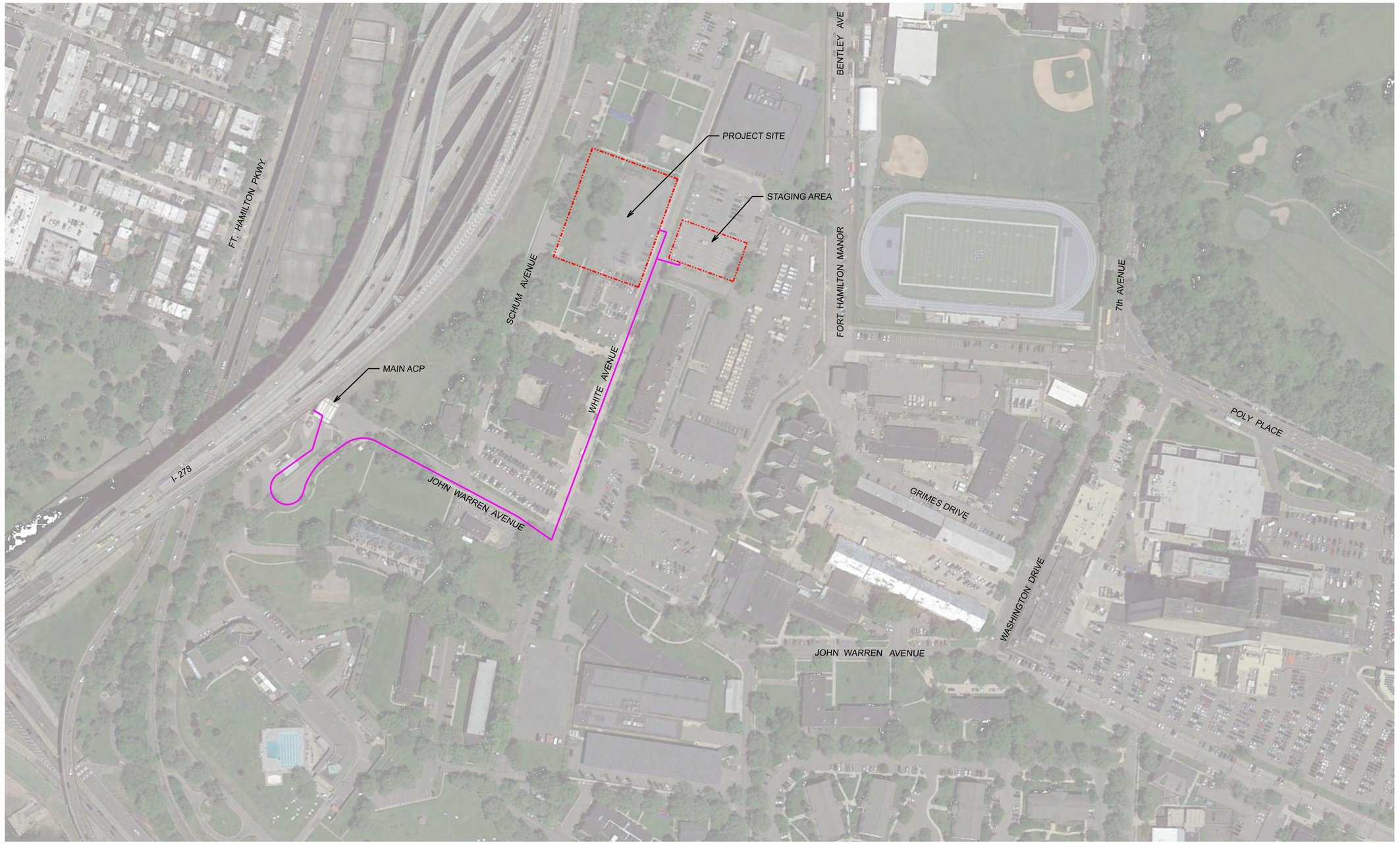

N

SCALE: NTS

US Army Corps of Engineers ®

MARK	DESCRIPTION	DATE

DESIGNED BY: KW
DRAWN BY: KW
CHECKED BY:
SUBMITTED BY:
ISSUE DATE: July 2025
SOLICITATION NO.: W912DS23F0031
CONTRACT NO.: W912DS19D0007
SIZE: ANSI D

US ARMY CORPS OF ENGINEERS
NEW YORK DISTRICT
26 FEDERAL PLAZA
NEW YORK, NY 10278

CHILD DEVELOPMENT CENTER
USAG FORT HAMILTON, NEW YORK
PROJECT #75662

CONSTRUCTION ACCESS/STAGING

SHEET ID

C-701

GENERAL LANDSCAPE NOTES:

1. UNDERGROUND UTILITIES EXIST ON SITE. THE LOCATION OF ALL SURFACE AND UNDERGROUND UTILITIES, RIGHT-OF-WAYS, EASEMENTS, ETC., SHALL BE VERIFIED BY THE CONTRACTOR AND THE GOVERNMENT. THE CONTRACTOR SHALL BE RESPONSIBLE FOR PROTECTING ALL UTILITIES FROM DAMAGE DURING CONSTRUCTION AND TO REPAIR ANY DAMAGE WHICH SHOULD OCCUR TO THE SATISFACTION OF THE GOVERNMENT. COMMENCEMENT OF LANDSCAPE INSTALLATION INDICATES ACCEPTANCE BY THE GOVERNMENT OF EXISTING CONDITIONS.

2. EXAMINE SUBGRADE UPON WHICH WORK IS TO BE PERFORMED. VERIFY SUBGRADE ELEVATIONS, OBSERVE CONDITIONS UNDER WHICH WORK IS TO BE PERFORMED, AND PROVIDE PERCOLATION TESTS AND ALL OTHER TESTS NECESSARY TO ASCERTAIN THAT ADEQUATE GROWING CONDITIONS WILL BE PROVIDED FOR PLANTS. IF PERCOLATION TESTS OR SUBSOIL CONDITIONS INDICATE RETENTION OF WATER IN PLANTING AREAS, AS SHOWN BY SEEPAGE OR OTHER EVIDENCE INDICATING PRESENCE OF UNDERGROUND WATER, NOTIFY GOVERNMENT IN WRITING OF THIS FACT OR OTHER UNSATISFACTORY CONDITIONS BEFORE BACKFILLING. A CHANGE ORDER MAY BE ISSUED TO DIRECT INSTALLATION OF DRAIN TILE OR OTHER MEASURES BEYOND DRAINAGE REQUIREMENTS INDICATED. DO NOT PROCEED WITH THE WORK UNTIL UNSATISFACTORY CONDITIONS HAVE BEEN CORRECTED. COMMENCEMENT OF PLANTING WORK INDICATES THAT SITE CONDITIONS HAVE BEEN ACCEPTED "AS IS" BY THE GOVERNMENT.

3. AS-BUILT SITE CONDITIONS MAY VARY FROM THIS PLAN. PLANT AND MATERIAL QUANTITIES AS SHOWN ON THE PLAN ARE FOR UNIFORM COMPARISON AND ESTIMATE PURPOSES ONLY. NOTIFY GOVERNMENT OF ALL SITE CONDITIONS WHICH WILL AFFECT PLANT QUANTITIES REQUIRED AND/OR THEIR LOCATIONS.

4. PROTECT EXISTING GRASS AREAS, TREES, AND OTHER VEGETATION TO REMAIN.

5. DAMAGE BY CONTRACTOR TO UNDISTURBED AREAS OUTSIDE THE LIMITS OF CONSTRUCTION SHALL BE REPAIRED BY CONTRACTOR TO THE SATISFACTION OF THE GOVERNMENT.

6. THE QUANTITIES INDICATED ON THE DRAWINGS ARE PROVIDED FOR THE BENEFIT OF THE CONTRACTOR, BUT SHOULD NOT BE ASSUMED TO ALWAYS BE CORRECT. THE CONTRACTOR SHALL BE RESPONSIBLE FOR HIS OWN QUANTITY CALCULATIONS AND THE LIABILITY WHICH PERTAINS TO THOSE QUANTITIES AND ANY RELATED CONTRACT DOCUMENTS AND/OR PRICE QUOTATIONS. CONTRACTOR IS RESPONSIBLE FOR PROVIDING PLANT QUANTITIES REQUIRED TO COVER SPECIFIED AREAS AT THE DESIGNATED SPACING.

7. CONTRACTOR IS RESPONSIBLE FOR CONDUCTING SITE INSPECTION PRIOR TO BIDDING WORK, TO DETERMINE SITE CONDITIONS AND AREAS TO BE PLANTED. SUBMISSION OF BID INDICATES CONTRACTOR HAS VERIFIED SITE CONDITIONS AND PLANT MATERIAL QUANTITIES.

8. INSPECTION: GOVERNMENT REPRESENTATIVE OR LANDSCAPE ARCHITECT MUST BE PRESENT WHEN TREES ARE INSTALLED.

9. SUBSTANTIAL COMPLETION: WILL BE PROVIDED AFTER THE CONTRACTOR HAS SATISFACTORILY COMPLETED WORK REQUIREMENTS AS SPECIFIED. THE GOVERNMENT WILL CONDUCT A SUBSTANTIAL COMPLETION INSPECTION AND PROVIDE A PUNCH LIST OF OBSERVED DEFICIENCIES.

10. FINAL ACCEPTANCE: THE GOVERNMENT WILL PROVIDE THE FINAL INSPECTION AFTER THE CONTRACTOR HAS SATISFACTORILY CORRECTED THE DEFICIENCIES ON THE PUNCH LIST. SHOULD THE GOVERNMENT INSPECTION FIND WORK INCOMPLETE, THE CONTRACTOR SHALL REMEDY THE DEFICIENCIES.

11. AFTER FINAL ACCEPTANCE AND PRIOR TO END OF WARRANTY PERIOD, CONTRACTOR SHALL REPLACE ALL PLANT MATERIAL THAT HAS DIED OR HAS DEFECTS, INCLUDING UNSATISFACTORY GROWTH, IN THE OPINION OF THE GOVERNMENT.

12. DURING LANDSCAPE INSTALLATION KEEP PAVEMENTS CLEAN AND WORK AREA IN ORDERLY CONDITION.

13. CONTRACTOR TO REPAIR ANY PAVEMENTS, CURBS, AND OTHER IMPROVEMENTS DAMAGED AS A RESULT OF LANDSCAPE INSTALLATION ACTIVITIES.

SODDING NOTES:

1. REFER TO CIVIL DRAWINGS AND SPECIFICATIONS FOR SODDING. SOD SHOULD BE USED AS APPROPRIATE UNLESS SPECIFICALLY NOTED OTHERWISE.

2. REPAIR WITH SOD, AS APPROPRIATE, ALL ERODED OR DISTURBED AREAS WHERE VEGETATIVE COVER HAS NOT BEEN ESTABLISHED.

3. CONTRACTOR IS RESPONSIBLE FOR MAINTENANCE OF SODDED AREAS UNTIL AREAS EXHIBIT HEALTHY AND VIGOROUS GROWTH AS DETERMINED BY THE GOVERNMENT.

PLANTING NOTES:

1. THE LOCATION OF ALL TREES, SHRUBS, AND GROUNDCOVER AREAS SHOWN ON THE PLAN SHALL BE STAKED/FLAGGED BY THE CONTRACTOR AND APPROVED BY THE GOVERNMENT BEFORE THE DIGGING OF PITS. PLANTING SHALL BE LOCATED WHERE SHOWN ON THE DRAWINGS OR WHERE FIELD LOCATED BY OWNER.

2. PROVIDE ONLY PLANTS THAT ARE FREE FROM DISEASES AND PESTS, AND THAT COMPLY WITH THE LATEST EDITION OF PUBLICATION ANSI Z60.1, AMERICAN STANDARDS FOR NURSERY STOCK, BY THE AMERICAN ASSOCIATION OF NURSERYMEN.

3. DO NOT MAKE SUBSTITUTIONS REGARDING PLANT SIZES OR SPECIES WITHOUT WRITTEN PERMISSION FROM THE GOVERNMENT.

4. REMOVE ALL STRINGS AND OTHER TIES FROM TREES.

5. FERTILIZE ALL PLANTS WITH 16-16-16 SLOW RELEASE FERTILIZER AT THE RATE OF: 3 LBS PER CUBIC YARD OF SOIL MIX; 3 LBS PER 100 SF OF BED FOR SHRUBS AND GROUNDCOVER.

6. BALLED AND BURLAPPED OR "B&B" PLANTS SHALL BE DUG WITH FIRM, NATURAL BALLS OF EARTH OF SUFFICIENT DIAMETER AND DEPTH TO ENCOMPASS THE FIBROUS AND FEEDING ROOT SYSTEM NECESSARY FOR FULL RECOVERY OF THE PLANT. BALLS SHALL BE FIRMLY WRAPPED WITH BURLAP OR SIMILAR MATERIAL AND BOUND WITH TWINE OR CORD.

7. AT A MINIMUM THE TOP ONE-HALF OF THE ROOT BALL IS TO HAVE ALL BURLAP AND TWINE REMOVED. IF ROOTS ARE GIRDLING OR CIRCLING THEY MUST BE LOOSENED OR CUT.

8. THE BALLS OF "B&B" PLANTS WHICH CANNOT BE PLANTED IMMEDIATELY ON DELIVERY SHALL BE COVERED WITH MOIST SOIL OR MULCH, OR OTHER PROTECTION FROM DRYING WINDS AND SUN. ALL PLANTS INSTALLED OR STORED SHALL BE WATERED BY CONTRACTOR AS NECESSARY UNTIL FINAL ACCEPTANCE.

9. ALL PLANTS SHALL BE HANDLED SO THAT ROOTS ARE ADEQUATELY PROTECTED AT ALL TIMES. DURING SHIPMENT, THE ENTIRE PLANT SHALL BE PROTECTED BY TARPAULINS OR OTHER SUITABLE COVERING. PLANT MATERIAL SUFFERING FROM WIND BURN OR OTHER DAMAGE IS NOT ACCEPTABLE.

10. NO PLANT SHALL BE BOUND WITH ROPE OR WIRE IN A MANNER THAT DAMAGES THE BARK, BREAKS BRANCHES, OR DESTROYS ITS NATURAL SHAPE. NO PLANT MATERIAL REQUIRED TO BE BALLED AND BURLAPPED SHALL BE ACCEPTED IF THE BALL IS CRACKED OR BROKEN EITHER BEFORE OR DURING THE PROCESS OF PLANTING, OR WHEN REQUIRED BURLAP, STAVES, ROPES OR PLATFORM HAVE BEEN REMOVED.

11. ANY SERIES OF TREES OR SHRUBS TO BE PLACED IN A PARTICULAR ARRANGEMENT WILL BE FIELD CHECKED FOR ACCURACY BY THE GOVERNMENT. ANY PLANTS INCORRECTLY ARRANGED SHALL BE RELOCATED WITH GOVERNMENT APPROVAL.

12. PRE-EMERGENT HERBICIDE SHALL BE APPLIED (ACCORDING TO MANUFACTURER'S INSTRUCTIONS) TO ALL PLANT BEDS, PRIOR TO PLANTING, FOR NOXIOUS WEED CONTROL. AVOID OVER APPLICATION INTO SEEDED/SODDED GRASS AREAS.

13. ALL PLANTING BEDS AND TREE PLANTINGS SHALL RECEIVE A MINIMUM 3" DEEP SHREDDED HARDWOOD MULCH LAYER.

14. CONTRACTOR IS RESPONSIBLE FOR THE WATERING AND MAINTENANCE OF ALL INSTALLED PLANT MATERIAL, INCLUDING GRASS, UNTIL FINAL ACCEPTANCE BY GOVERNMENT. WATER ALL PLANT MATERIAL AT TIME OF PLANTING.

15. ALL PLANT MATERIAL IS TO BE GUARANTEED FOR ONE (1) YEAR. GUARANTEE PERIOD STARTS FROM DATE OF SUBSTANTIAL COMPLETION.

16. GROUNDCOVER SPACING PATTERN SHALL BE AS INDICATED ON TYPICAL SPACING PATTERN USING SPACING DIMENSION AS SHOWN ON PLANS AND SCHEDULE.

17. ALL PLANTING AREAS ARE TO HAVE SOIL TESTS PERFORMED UPON THEM TO DETERMINE IF THE PROPER SOIL PH IS PRESENT. RESULTS FROM THESE TESTS ARE TO BE SENT TO THE GOVERNMENT. IF THE TEST INDICATES MPROPER PH, THEN THE LANDSCAPE CONTRACTOR IS TO ADD LIME OR SULFUR TO PROVIDE THE PROPER SOIL PH.

18. LANDSCAPE CONTRACTOR SHALL SUBMIT TYPEWRITTEN INSTRUCTIONS RECOMMENDING PROCEDURES TO BE ESTABLISHED BY GOVERNMENT FOR MAINTENANCE AND WATERING OF LANDSCAPE WORK FOR ONE FULL YEAR. SUBMIT PRIOR TO FINAL ACCEPTANCE.

19. THE GOVERNMENT MAY INSPECT TREES AND SHRUBS EITHER AT NURSERY OR ON-SITE PRIOR TO PLANTING, FOR COMPLIANCE WITH REQUIREMENTS FOR GENUS, SPECIES, SIZE, AND QUALITY. THE GOVERNMENT RETAINS THE RIGHT TO FURTHER INSPECT TREES AND SHRUBS FOR SIZE AND CONDITION OR ROOT BALL, INSECTS, INJURIES, AND LATENT DEFECTS TO REJECT UNSATISFACTORY OR DEFECTIVE PLANT MATERIAL AT ANY TIME DURING PROGRESS OF WORK. REMOVE REJECTED MATERIAL IMMEDIATELY FROM THE PROJECT SITE.

20. REPLACEMENTS SHALL CLOSELY MATCH ADJACENT SPECIMENS OF THE SAME SPECIES AND SHALL CONFORM TO THE STANDARDS FOR PLANT MATERIALS SPECIFIED. ALL REPLACED MATERIAL SHALL IMMEDIATELY BE REMOVED FROM THE SITE AND ALL NECESSARY REPAIRS TO GRADES, LAWN AREAS, PAVING, AND OTHER AREAS DAMAGED DURING REPLACEMENT SHALL BE MADE AT NO COST TO THE GOVERNMENT.

21. ONLY ONE REPLACEMENT PER TREE, SHRUB, OR PLANT WILL BE REQUIRED AT THE END OF THE WARRANTY, EXCEPT FOR LOSSES OR REPLACEMENTS DUE TO FAILURE TO COMPLY WITH THE REQUIREMENTS.

PLANT SCHEDULE

Key	Qty	Scientific Name	Common Name	Size	Spacing	Remarks
TREES						
UP	9	Ulmus parvifolia	Lacebark Elm	3" Cal.	As Shown	Well branched single leader, matched canopy
CK	2	Cornus kousa x florida 'Rutgen'	Stellar Pink Rutgers Dogwood	1-1/2" Cal.	As Shown	Well branched single leader, matched canopy
JC	11	Juniperus chinensis 'Spartan'	Spartan Juniper	8' Ht.	As Shown	Straight growth habit, matched height
SHRUBS						
AG	60	Abelia x grandiflora 'Little Richard'	Glossy Abelia	#3 Cont.	As Shown	Container
GROUNDCOVER						
SP	30	Ipomoea 'Margarita'	Sweet Potato Vine Margarita	#1 Cont.	12" O.C.	Container
PS	645	Phlox subulata	Mountain Phlox	#1 Cont.	24" O.C.	Container
PT	1,035	Pachysandra terminalis	Pachysandra	#1 Cont.	24" O.C.	Container
GRASS						
LA	12,422	Lolium arundinaceum	Tall Fescue	N/A	SF	Sod for site and playgrounds

US Army Corps of Engineers ®

MARK	DESCRIPTION	DATE

File Path: P:\13267\13267-001\33 - PLANNING & GIS\08_WORKING FILES\AUTOCAD\100% SUBMISSION

ISSUE DATE: AUGUST 29, 2025
SOLICITATION NO.: W912DS23F0031
CONTRACT NO.: W912DZ19D0007

DESIGNED BY: A. BLOXDORF
DRAWN BY: A. BLOXDORF
CHECKED BY: C. FOWLER
SUBMITTED BY: A. STARR
SIZE: ANSI D

US ARMY CORPS OF ENGINEERS
NEW YORK DISTRICT
26 FEDERAL PLAZA, NEW YORK, NY 10278

NOT FOR CONSTRUCTION

CHILD DEVELOPMENT CENTER
USAG FORT HAMILTON, NEW YORK
Project No. 75662

LANDSCAPE NOTES & PLANT SCHEDULE

SHEET ID

L-001

Plot Date: 8/28/2025 3:55:00 PM

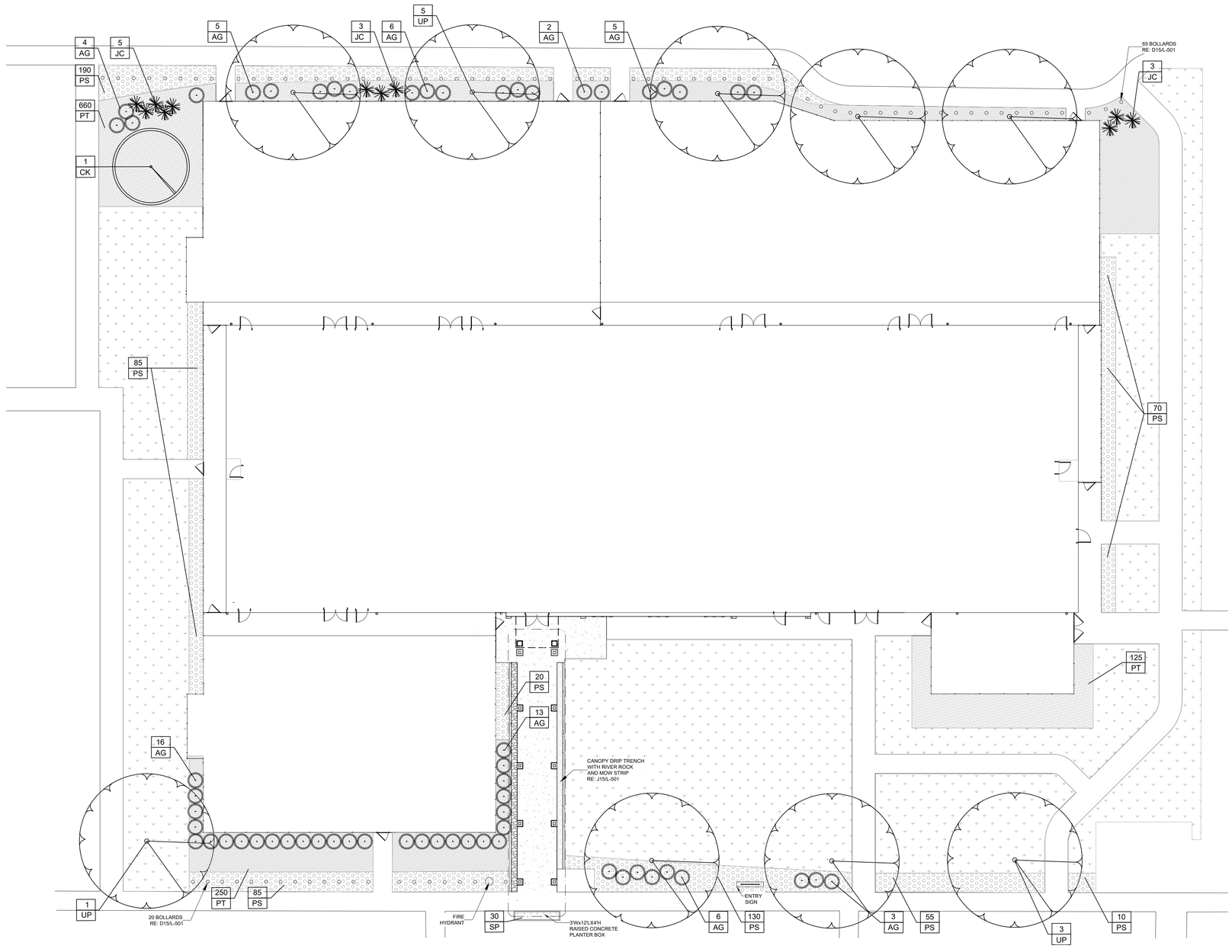

B1 LANDSCAPE PLAN
1" = 15'-0"

LEGEND:

	J1 / L501	DECIDUOUS TREE
	J9 / L501	CONIFEROUS TREE
	E1 / L501	SHRUB
	A1 / L501	GROUNDCOVER
	E9 / L501	SOD
	J15 / L501	CANOPY DRIP TRENCH
	D15 / L501	BOLLARD (OPTIONAL)

NOTES:

1. SEE PLAYGROUND DRAWINGS FOR LAYOUT.
2. REFER TO CIVIL DRAWINGS FOR SITE LAYOUT AND HARDSCAPE.

15' 0 15' 30'

SCALE: 1" = 15'

GRAPHIC SCALE

US Army Corps of Engineers ®

MARK	DESCRIPTION	DATE

File Path: P:\13267\13267-001\33 - PLANNING & GIS\08_WORKING FILES\AUTOCAD\100% SUBMISSION

Plot Date: 8/28/2025 3:58:00 PM

DESIGNED BY: A. BLOXDORF	ISSUE DATE: AUGUST 29, 2025
DRAWN BY: A. BLOXDORF	SOLICITATION NO.: W912DS23F0031
CHECKED BY: D. CHIN	CONTRACT NO.: W912DZ19D0007
SUBMITTED BY: A. STARR	
SIZE: ANSI D	

US ARMY CORPS OF ENGINEERS
NEW YORK DISTRICT
26 FEDERAL PLAZA, NEW YORK, NY 10278

NOT FOR CONSTRUCTION

CHILD DEVELOPMENT CENTER
USAG FORT HAMILTON, NEW YORK
Project No. 75662

LANDSCAPE PLAN

SHEET ID

L-101

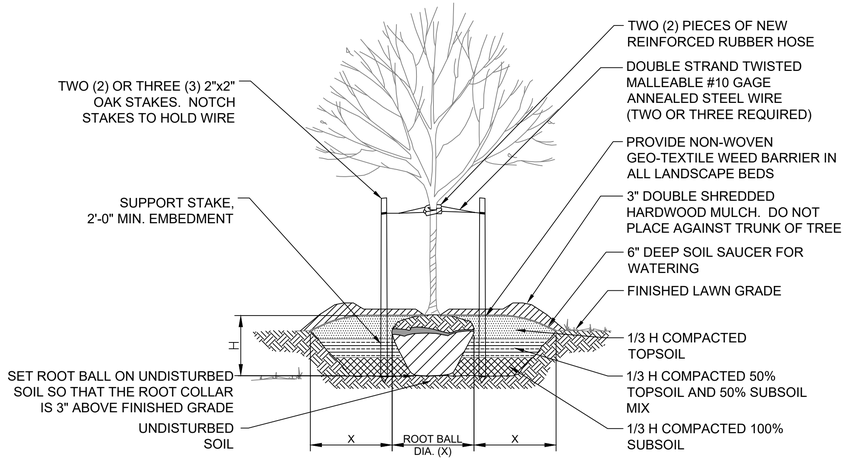

NOTES:
1. DIG ELLIPTICAL HOLE THREE (3) TIMES THE DIAMETER OF THE TOP OF ROOT BALL. "X"= DIAMETER OF THE ROOT BALL
2. REMOVE ALL CORD FROM AROUND TRUNK AND REMOVE ALL METAL, PLASTIC, OR BURLAP FROM TOP 1/3 OF ROOTBALL
3. ALL PLANTS MUST BE PLANTED TO BEAR THE SAME RELATION TO FINISHED GRADE AS IT BORE TO PREVIOUS EXISTING GRADE AT NURSERY

J1 DECIDUOUS TREE
NTS

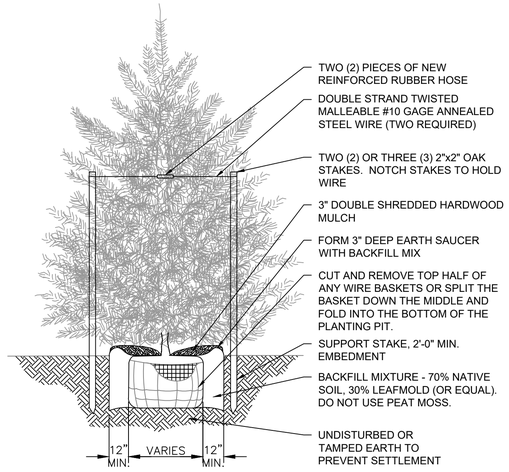

NOTES:
1. REMOVE ALL CORD FROM AROUND TRUNK AND REMOVE ALL METAL, PLASTIC, OR BURLAP FROM TOP 1/3 OF ROOTBALL.
2. ALL PLANTS SHALL BE PLANTED TO BEAR THE SAME RELATION TO FINISHED GRADE AS IT BORE TO PREVIOUS EXISTING GRADE AT NURSERY.

J9 CONIFEROUS TREE
NTS

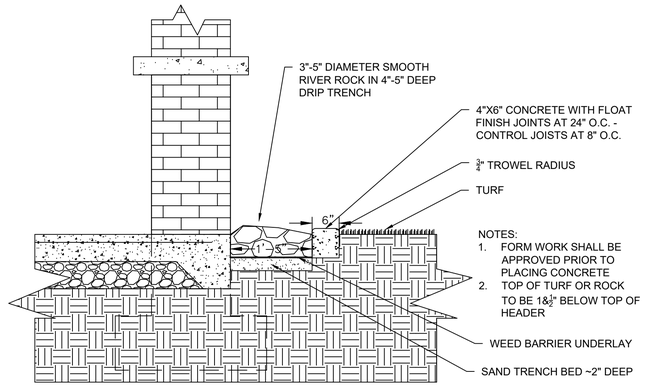

NOTES:
1. FORM WORK SHALL BE APPROVED PRIOR TO PLACING CONCRETE
2. TOP OF TURF OR ROCK TO BE 1½" BELOW TOP OF HEADER

J15 CANOPY DRIP TRENCH
NTS

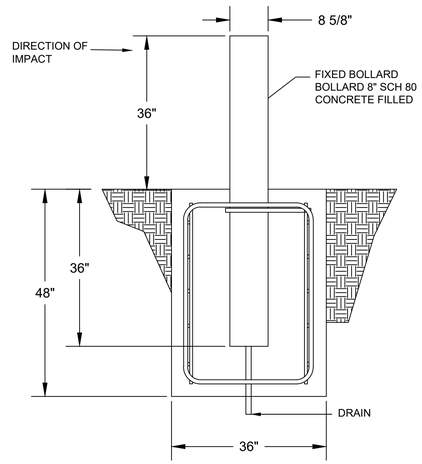

D15 BOLLARD (OPTIONAL)
NTS

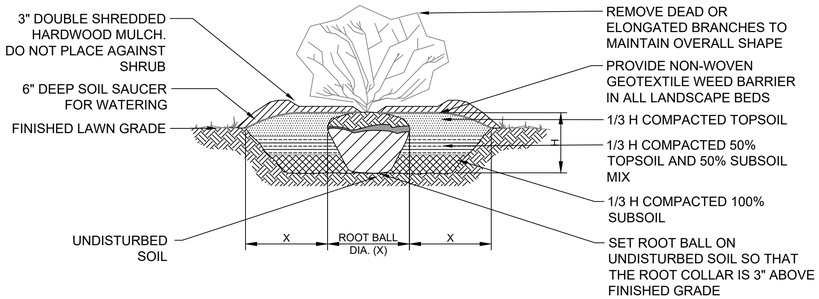

E1 SHRUB
NTS

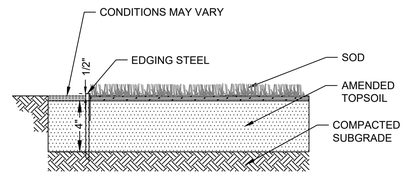

E9 SOD
NTS

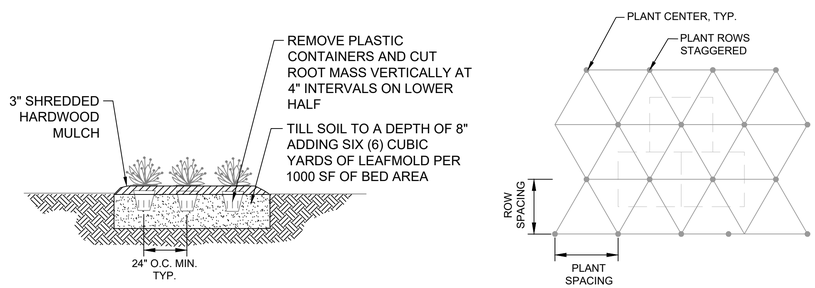

A1 GROUNDCOVER
NTS

US Army Corps of Engineers ®

MARK	DESCRIPTION	DATE

File Path: P:\13267\13267-001\33 - PLANNING & GIS\08_WORKING FILES\AUTOCAD\100% SUBMISSION

ISSUE DATE: AUGUST 29, 2025
SOLICITATION NO.: W912DS23F0031
CONTRACT NO.: W912DZ19D0007

DESIGNED BY: A. BLOXDORF
DRAWN BY: A. BLOXDORF
CHECKED BY: C. FLYNN
SUBMITTED BY: A. STARR
SIZE: ANSI D

US ARMY CORPS OF ENGINEERS
NEW YORK DISTRICT
26 FEDERAL PLAZA, NEW YORK, NY 10278

NOT FOR CONSTRUCTION

CHILD DEVELOPMENT CENTER
USAG FORT HAMILTON, NEW YORK
Project No. 75662

LANDSCAPE DETAILS

SHEET ID
L-501

Plot Date: 8/28/2025 3:59:00 PM

DRAWING ABBREVIATIONS

A	----------
A/E	ARCHITECT/ENGINEER
AB	ANCHOR BOLT
ACI	AMERICAN CONCRETE INSTITUTE
ADA	AMERICANS WITH DISABILITIES ACT
ADDL	ADDITIONAL
ADJ	ADJACENT
AFF	ABOVE FINISHED FLOOR
AFG	ABOVE FINISHED GRADE
AFS	ABOVE FINISHED SLAB
AGGR	AGGREGATE
AHU	AIR HANDLING UNIT
AISC	AMERICAN INSTITUTE OF STEEL CONSTRUCTION
ALT	ALTERNATE
ALUM	ALUMINUM
ANOD	ANODIZE
APA	AMERICAN PLYWOOD ASSOCIATION
APPROX	APPROXIMATE
AR	AS REQUIRED
ARCH	ARCHITECT, ARCHITECTURAL
ASSY	ASSEMBLY
ASTM	AMERICAN SOCIETY FOR TESTING AND MATERIALS
ATFP	ANTI-TERRORISM FORCE PROTECTION
AVG	AVERAGE
AWS	AMERICAN WELDING SOCIETY
B	----------
BDRY	BOUNDARY
BF	BRACED FRAME
BFF	BELOW FINISH FLOOR
BFE	BOTTOM OF FOOTING ELEVATION
BHMA	BUILDER'S HARDWARE MANUFACTURER'S ASSOCIATION
BLDG	BUILDING
BLKG	BLOCKING
BO	BOTTOM OF
BOS	BOTTOM OF STEEL
BOT	BOTTOM
BSMT	BASEMENT
BTWN	BETWEEN
C	----------
CD	CONSTRUCTION DOCUMENTS
CFMF	COLD-FORMED METAL FRAMING
CI	CAST IRON
CIP	CAST-IN-PLACE
CJ	CONTROL JOINT
CJP	COMPLETE JOINT PENETRATION
CL	CENTER LINE
CLL	COLUMN LINE
CLR	CLEAR
CMU	CONCRETE MASONRY UNIT
COL	COLUMN
CONC	CONCRETE
CONN	CONNECTION
CONT	CONTINUOUS
COORD	COORDINATE
CTR	CENTER
CU FT	CUBIC FEET
D	----------
D	DEPTH
DBL	DOUBLE
DEG	DEGREE
DEMO	DEMOLISH, DEMOLITION
DEPT	DEPARTMENT
DET	DETAIL
DIA	DIAMETER
DIAG	DIAGONAL
DIR	DIRECTION
DIST	DISTANCE
DL	DEAD LOAD
DOC	DOCUMENT
DWG	DRAWING
DWL	DOWEL
E	----------
EA	EACH
EF	EACH FACE
EIFS	EXTERIOR INSULATION AND FINISH SYSTEM
EJ	EXPANSION JOINT
ES	EACH SIDE
EL	ELEVATION
ELEC	ELECTRICAL
ELEV	ELEVATION
ELEV	ELEVATOR
EPS	EXPANDED POLYSTYRENE BOARD (INSULATION)
EQ	EQUAL
EQUIP	EQUIPMENT
EW	EACH WAY
EXIST	EXISTING
EXT	EXTERIOR
F	----------
FD	FLOOR DRAIN
FDN	FOUNDATION
FED	FEDERAL
FIN	FINISH
FLEX	FLEXIBLE
FLR	FLOOR
FRMG	FRAMING
FT	FOOT, FEET
FTG	FOOTING
G	----------
GA	GAUGE
GALV	GALVANIZED
GYP	GYPSUM
H	----------
HDPE	HIGH DENSITY POLYETHYLENE
HORIZ	HORIZONTAL
HP	HIGH POINT
HSS	HOLLOW STRUCTURAL SECTION
HT	HEIGHT

I	----------
I	MOMENT OF INERTIA
IBC	INTERNATIONAL BUILDING CODE
ID	INSIDE DIAMETER
IN	INCH
INCL	INCLUDE
INFO	INFORMATION
INT	INTERIOR
ILO	IN LIEU OF
J	----------
JST	JOIST
K	----------
K, KIP	THOUSAND POUNDS
L	----------
L	LENGTH
LB	POUND
LBR	LUMBER
LF	LINEAR FEET (FOOT)
LIN	LINEAR
LL	LIVE LOAD
LLH	LONG LEG HORIZONTAL
LLV	LONG LEG VERTICAL
LONG	LONGITUDINAL
LP	LOW POINT
LT	LIGHT
LW	LIGHTWEIGHT
M	----------
MATL	MATERIAL
MAX	MAXIMUM
MD	METAL DECK
MECH	MECHANICAL
MED	MEDIUM
MEZZ	MEZZANINE
MF	MOMENT FRAME
MFR	MANUFACTURER
MID	MIDDLE
MIL STD	MILITARY STANDARD
MIN	MINIMUM
MISC	MISCELLANEOUS
MO	MASONRY OPENING
MOD	MODIFY
MTL	METAL
N	----------
N	NORTH
NA	NOT APPLICABLE
NFPA	NATIONAL FIRE PROTECTION ASSOCIATION
NIC	NOT IN CONTRACT
NO	NUMBER
NOM	NOMINAL
NW	NORMALWEIGHT
O	----------
OA	OVERALL
OC	ON CENTER
OD	OUTSIDE DIAMETER
OH	OPPOSITE HAND
OPNG	OPENING
OPP	OPPOSITE
OWSJ	OPEN WEB STEEL JOIST
ORIG	ORIGINAL
P	----------
PCC	PRECAST CONCRETE
PCF	POUNDS PER CUBIC FOOT
PCT	PERCENT
PEN	PENETRATION
PERF	PERFORATED
PERIM	PERIMETER
PH	PHASE
PIL	PILASTER
PL	PLATE
PLBG	PLUMBING
PLYWD	PLYWOOD
PRCST	PRECAST
PSF	POUNDS PER SQUARE FOOT
PSI	POUNDS PER SQUARE INCH
PT	POINT, POST TENSIONED
R	----------
RC	REINFORCED CONCRETE
RD	ROOF DRAIN
REF	REFERENCE
REINF	REINFORCING, REINFORCED
REQ	REQUIRE
REQ'D	REQUIRED
REQS	REQUIREMENTS
REV	REVISION, REVISED
RGD	RIGID
RO	ROUGH OPENING
S	----------
S	SECTION MODULUS
SC	SLIP CRITICAL
SCHED	SCHEDULE
SDI	STEEL DECK INSTITUTE
SDL	SUPERIMPOSED DEAD LOAD
SECT	SECTION
SEIS	SEISMIC
SF	SQUARE FOOT (FEET)
SHT	SHEET
SHTHG	SHEATHING
SIM	SIMILAR
SJI	STEEL JOIST INSTITUTE
SP EL	SPOT ELEVATION
SPEC	SPECIFICATION
SQ	SQUARE
SQ IN	SQUARE INCH
SQ YD	SQUARE YARD
SS	STAINLESS STEEL
STD	STANDARD
STIFF	STIFFENER
STL	STEEL
STRUCT	STRUCTURAL, STRUCTURE
SUSP	SUSPENDED
SYM	SYMMETRICAL

T	----------
T&B	TOP AND BOTTOM
T&G	TONGUE AND GROOVE
TEMP	TEMPORARY
TFF	TOP OF FINISH FLOOR
THK	THICK, THICKNESS
TO	TOP OF
TOC	TOP OF CONCRETE
TOF	TOP OF FOOTING
TOM	TOP OF MASONRY
TOP	TOP OF PARAPET
TOPO	TOPOGRAPHY
TOS	TOP OF SLAB, TOP OF STEEL
TOW	TOP OF WALL
TYP	TYPICAL
U	----------
UFC	UNITED FACILITIES CRITERIA
UNO	UNLESS NOTED OTHERWISE
V	----------
VERT	VERTICAL
W	----------
w/	WITH
WF	WIDE FLANGE
WP	WORKING POINT
WWF	WELDED WIRE FABRIC

INDEX OF DRAWINGS

S-001	GENERAL NOTES & DESIGN CRITERIA
S-002	GENERAL NOTES
S-003	LOADING PLANS
S-004	LOADING DIAGRAMS
S-005	SCHEDULES
S-006	3D VIEWS
S-101	FIRST FLOOR SLAB AND FOUNDATION PLAN
S-102	T.O. WALL FRAMING PLAN
S-103	ROOF FRAMING PLAN
S-104	CANOPY FRAMING PLANS
S-201	BUILDING SECTIONS
S-202	CANOPY SECTIONS
S-203	SHEAR WALL ELEVATIONS
S-204	SHEAR WALL ELEVATIONS
S-205	TRUSS ELEVATIONS
S-206	TRUSS ELEVATIONS
S-301	TYPICAL FOUNDATION DETAILS
S-302	TYPICAL FOUNDATION DETAILS
S-303	FOUNDATION DETAILS
S-401	TYPICAL CMU DETAILS
S-402	TYPICAL CMU DETAILS
S-501	TYPICAL STEEL DETAILS
S-502	STEEL DETAILS
S-503	STEEL DETAILS

NUMBERING SYSTEM:

DISCIPLINE:
C - CIVIL
L - LANDSCAPE
A - ARCHITECTURE
M - MECHANICAL
E - ELECTRICAL
P - PLUMBING
S - STRUCTURAL
K - FOOD SERVICE

SHEET NUMBER WITHIN SERIES

X-100

ANNOTATION CALLOUTS/DRAWING SYMBOLS

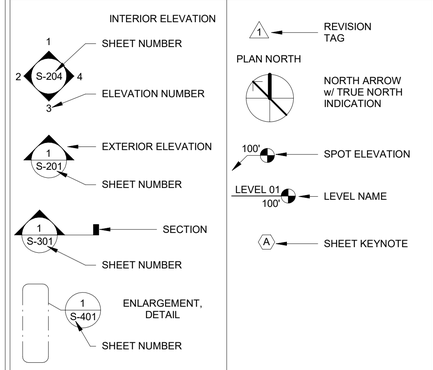

DESIGN LOADS AND CRITERIA

1. REFERENCES
   - A. UFC 3-301-01 STRUCTURAL ENGINEERING
     - a. INCLUDING ALL STANDARDS REFERENCED WITHIN
   - B. INTERNATIONAL BUILDING CODE (IBC) 2021
   - C. AMERICAN SOCIETY OF CIVIL ENGINEERS (ASCE) 7-16
   - D. AMERICAN CONCRETE INSTITUTE (ACI) 318-19
   - E. AMERICAN INSTITUTE OF STEEL CONSTRUCTION (AISC) 360-16
   - F. THE MASONRY SOCIETY (TMS) 402/602-16
   - G. AMERICAN IRON AND STEEL INSTITUTE (AISI) S100-16
2. DESIGN LOADS
   - A. RISK CATEGORY = II
   - B. ROOF OVERFRAMING SELF WEIGHT
     - a. A UNIFORM LOAD OF 10 PSF WAS APPLIED TO THE STEEL FRAMING TO ACCOUNT FOR THE SELF WEIGHT OF THE LIGHT GAUGE STEEL ROOF OVERFRAMING. THE DESIGNER MUST INCLUDE THE TOTAL WEIGHT OF ROOF OVERFRAMING ON THEIR SHOP DRAWINGS, USING UNITS OF EITHER TOTAL POUNDS OR POUNDS PER LINEAR FOOT OF LENGTH. THE SHOP DRAWINGS, INCLUDING SELF WEIGHTS, MUST BE PROVIDED AS PART OF THE DELEGATED DESIGN SUBMISSION AND REVIEWED BY THE STRUCTURAL ENGINEER PRIOR TO STEEL FABRICATION. IF THE SELF WEIGHT OF THE ROOF OVERFRAMING EXCEEDS 10 PSF, THE STEEL FRAMING MAY NEED TO BE REDESIGNED TO ACCOUNT FOR THE ADDITIONAL LOAD.
   - C. SUPERIMPOSED DEAD LOADS
     - a. SEE LOADING PLANS ON S-003.
   - D. LIVE LOADS
     - a. SEE LOADING PLANS ON S-003.
   - E. SNOW LOADS
     - a. GROUND SNOW LOAD, p_g = 20 PSF
     - b. SNOW LOAD IMPORTANCE FACTOR, I_S = 1.0
     - c. SNOW EXPOSURE FACTOR, C_e = 1.0
     - d. THERMAL FACTOR
       - MAIN BUILDING: C_t = 1.0
       - DETACHED CANOPY: C_t = 1.2
     - e. ROOF SLOPE FACTOR, C_s = 1.0
     - f. FLAT ROOF SNOW LOAD
       - MAIN BUILDING: p_f = 14 PSF
       - DETACHED CANOPY: p_f = 17 PSF
     - g. SLOPED ROOF SNOW LOAD
       - MAIN BUILDING: p_s = 14 PSF
       - DETACHED CANOPY: p_s = 17 PSF
     - h. UNBALANCED ROOF SNOW LOADS
       - SEE UNBALANCED SNOW LOAD DIAGRAMS ON SHEET S-004.
     - i. SNOW LOADS INCREASED AS REQUIRED FOR DRIFT LOAD CASES
   - F. WIND LOADS
     - a. BASIC WIND SPEED, V = 116 MPH
     - b. ENCLOSURE CLASSIFICATION
       - MAIN BUILDING: PARTIALLY ENCLOSED
       - DETACHED CANOPY: OPEN
     - c. EXPOSURE CATEGORY = B
     - d. MEAN ROOF HEIGHT
       - MAIN BUILDING: h = 22 FT
       - DETACHED CANOPY: h = 14.9 FT
     - e. WIND DIRECTIONALITY FACTOR, K_d = 0.85
     - f. TOPOGRAPHIC FACTOR, K_{zt} = 1.0
     - g. GUST-EFFECT FACTOR, G = 0.85
     - h. INTERNAL PRESSURE COEFFICIENT, GC_{pi} = ±0.55
   - G. SEISMIC LOADS
     - a. SITE CLASS = D
     - b. SEISMIC IMPORTANCE FACTOR, I_e = 1.0
     - c. SPECTRAL RESPONSE ACCELERATION PARAMETERS, MAPPED
       - SHORT PERIOD, S_S = 0.280
       - 1s, S_1 = 0.058
     - d. SPECTRAL RESPONSE ACCELERATION PARAMETERS, ADJUSTED FOR SITE CLASS EFFECTS
       - SHORT PERIOD, S_{MS} = 0.448
       - 1s, S_{M1} = 0.139
     - e. SPECTRAL RESPONSE ACCELERATION PARAMETERS, DESIGN
       - SHORT PERIOD, S_{DS} = 0.299
       - 1s, S_{D1} = 0.093
     - f. SEISMIC DESIGN CATEGORY = B
     - g. SEISMIC FORCE RESISTING SYSTEM =
       - MAIN BUILDING = A8: INTERMEDIATE REINFORCED MASONRY SHEAR WALLS
         1. R = 3.5
         2. Ω_0 = 2.5
         3. C_d = 2.25
       - DETACHED CANOPY = H: STEEL SYSTEMS NOT SPECIFICALLY DETAILED FOR SEISMIC RESISTANCE, EXCLUDING CANTILEVER COLUMN SYSTEMS
         1. R = 3
         2. Ω_0 = 3
         3. C_d = 3
3. DESIGN BUILDING DRIFT & DEFLECTION CRITERIA:
   - A. FLOOR SYSTEMS: (VERTICAL DEFLECTION)
     - LIVE LOAD: L/360 (1" MAX)
     - TOTAL LOAD: L/240
   - B. ROOF SYSTEMS: (VERTICAL DEFLECTION)
     - LIVE LOAD: L/360 (1" MAX)
     - TOTAL LOAD: L/240
   - C. WALL SYSTEMS: (HORIZONTAL DEFLECTION)
     - METAL STUD BACKUP W/ OTHER VENEER: L/360
     - METAL STUD BACKUP W/ BRICK VENEER: L/600
   - D. MAIN BUILDING DRIFT: (HORIZONTAL DEFLECTION)
     - WIND DRIFT: STORY HEIGHT/400 (MAX.)
     - SEISMIC DRIFT: 0.007*STORY HEIGHT (MAX.)
   - E. DETACHED CANOPY DRIFT: (HORIZONTAL DEFLECTION)
     - WIND DRIFT: STORY HEIGHT/200 (MAX.)
     - SEISMIC DRIFT: 0.020*STORY HEIGHT (MAX.)
4. MATERIAL DESIGN STRENGTHS AND SPECIFICATIONS
   - A. THE FOLLOWING MATERIAL STRENGTHS MUST BE PROVIDED UNLESS SPECIFICALLY NOTED OTHERWISE, OR UNLESS THE PROJECT SPECIFICATIONS CALL FOR A MORE CONSERVATIVE VALUE. WHERE A SPECIFICATION IS NOTED, THE DESIGN STRENGTH REQUIRED BY THAT SPECIFICATION MUST BE PROVIDED, IN ADDITION TO THE OTHER REQUIREMENTS OUTLINED BY THAT SPECIFICATION.
   - B. CONCRETE
     - a. 28 DAY COMPRESSIVE STRENGTH, f'_c = 4000 PSI
     - b. DENSITY = 150 PCF
     - c. REINFORCING STEEL: ASTM A615, F_y = 60 KSI
   - C. STEEL
     - a. W, WT SHAPES: ASTM A992 (50 KSI)
     - b. M, S, C, MC, L SHAPES: ASTM A36
     - c. SQUARE AND RECTANGULAR HSS SHAPES: ASTM A500, GR. C (50 KSI)
     - d. ROUND HSS SHAPES: ASTM A500, GR. C (46 KSI)
     - e. MISC. PLATES AND BARS: ASTM A36
     - f. THREADED RODS AND FASTENERS: ASTM A36
     - g. BOLTS: ASTM F3125, GR. A325 OR A490
     - h. ANCHOR RODS: ASTM F1554, GR. 36
     - i. SHEAR STUD CONNECTORS: ASTM A108
   - D. MASONRY
     - a. CMU: ASTM C90, f'_m = 2000 PSI, NORMALWEIGHT
     - b. MORTAR: ASTM C270, TYPE M OR S
     - c. GROUT: ASTM C476, f'_c = 3000 PSI
     - d. REINFORCING STEEL: ASTM A615, F_y = 60 KSI

GENERAL NOTES

GENERAL

1. ALL WORK MUST CONFORM TO THE CODES AND REFERENCES LISTED IN THE "DESIGN LOADS AND CRITERIA" SECTION ON THIS SHEET
2. THE PROJECT SPECIFICATIONS ARE A PART OF THE CONTRACT DOCUMENTS. IN THE EVENT THAT INFORMATION SHOWN ON THESE DRAWINGS CONFLICTS WITH THE PROJECT SPECIFICATIONS, THE MORE CONSERVATIVE REQUIREMENT WILL GOVERN. NOTIFY USACE IMMEDIATELY WHEN CONFLICTS ARE IDENTIFIED.
3. THE CONTRACTOR MUST EXAMINE THE STRUCTURAL DRAWINGS AND MUST NOTIFY THE CONTRACTING OFFICER OF ANY DISCREPANCIES BEFORE PROCESSING WITH ANY WORK.
4. THE DRAWINGS AND SPECIFICATIONS REPRESENT THE COMPLETED STRUCTURE. THEY DO NOT INDICATE THE METHOD OF CONSTRUCTION. THE CONTRACTOR MUST PROVIDE ALL MEASURES AND MEANS NECESSARY TO PROTECT PERSONS AND STRUCTURES DURING CONSTRUCTION. SUCH MEASURES WILL INCLUDE, BUT NOT BE LIMITED TO BRACING, SHORING, ETC. OBSERVATION BY THE ARCHITECT, ENGINEER OR CONTRACTING OFFICER DOES NOT INCLUDE REVIEW OF THESE MEASURES.
5. NOTES AND DETAILS ON THE STRUCTURAL DRAWINGS TAKE PRECEDENCE OVER GENERAL NOTES. TYPICAL DETAILS WILL BE USED WHENEVER APPLICABLE. REFER TO SPECIFICATIONS FOR ADDITIONAL INFORMATION.
6. ALL WORK NOT DETAILED OR NOTED WILL BE CONSTRUCTED IN ACCORDANCE WITH OTHER SIMILAR WORK SHOWN ON THE DRAWINGS AND TYPICAL DETAILS. DIMENSIONS WILL TAKE PRECEDENCE OVER GENERAL NOTES AND TYPICAL DETAILS. DRAWINGS WILL NOT BE SCALED FOR CONSTRUCTION PURPOSES.
7. NO PIPES OR DUCTS WILL BE PLACED IN OR PENETRATE STRUCTURAL MEMBERS UNLESS SPECIFICALLY DESIGNED AND DETAILED.
8. REFER TO ARCHITECTURAL DRAWINGS FOR THE FOLLOWING:
   - a. SIZE AND LOCATION OF DOOR AND WINDOW OPENINGS, EXCEPT AS NOTED.
   - b. SIZE AND LOCATION OF INTERIOR AND EXTERIOR NONBEARING PARTITIONS.
   - c. SIZE AND LOCATION OF CURBS, FLOOR DRAINS, SLOPES, DEPRESSED AREAS, CHANGES IN LEVEL, RAMPS, CHAMFERS GROOVES, INSERTS, ETC.
   - d. SIZE AND LOCATION OF FLOOR AND ROOF OPENINGS IF NOT DIMENSIONED ON THESE DRAWINGS.
   - e. FLOOR AND ROOF FINISHES.
   - f. DIMENSIONS NOT SHOWN ON STRUCTURAL DWGS.
9. REFER TO MECHANICAL, PLUMBING, AND ELECTRICAL DRAWINGS FOR THE FOLLOWING:
   - a. PIPE RUNS, SLEEVES, HANGERS, EQUIPMENT, SLAB OPENINGS, NOT SHOWN OR NOTED HEREIN.
   - b. ELECTRICAL CONDUIT, BOXES, OUTLETS.
   - c. CONCRETE INSERTS FOR ELECTRICAL, MECHANICAL, AND PLUMBING FIXTURES.
   - d. SIZE AND LOCATION OF MACHINE AND EQUIPMENT BASES. CONTRACTOR'S ENGINEER MUST DESIGN SEISMIC ANCHORAGE FOR MECHANICAL AND ELECTRICAL EQUIPMENT PER SPEC.
10. ASTM REFERENCES ARE FOR LATEST REVISIONS AND ISSUE, UNO.
11. CONTRACTOR MUST INVESTIGATE THE SITE DURING CLEARING AND EXCAVATION FOR UNSUITABLE CONDITIONS. UNCONSOLIDATED AND UNDOCUMENTED FILLS, BURIED STRUCTURES, UTILITIES, ETC, MUST IMMEDIATELY NOTIFY THE CONTRACTING OFFICER OF ANY SITE CONDITIONS NOT REFLECTED ON THE DRAWINGS OR DIFFERENT FROM MAXIMUM OR MINIMUM DIMENSIONS INDICATED, INCLUDING CONFLICT IN GRADES, ADVERSE SOIL CONDITIONS, GROUND WATER PRESENT, DEEPENED FOOTINGS, UNCOVERED AND UNEXPECTED UTILITY LINES, ETC.
12. CONSTRUCTION MATERIALS WILL BE SPREAD OUT IF PLACED ON STRUCTURAL FRAME SUCH THAT THE LOADING DOES NOT EXCEED THE DESIGN LIVE LOADS. PROVIDE SHORING AND BRACING WHERE DESIGN STRENGTH HAS NOT BEEN ATTAINED OR STRUCTURE IS NOT COMPLETE.
13. STRUCTURAL DRAWINGS TO BE USED IN CONJUNCTION WITH ARCHITECTURAL DRAWINGS HEREIN.

COMPONENTS AND CLADDING WIND PRESSURE LOADS ON BUILDING

EFFECTIVE WIND AREA (SF)	ROOF LOADS (PSF)						WALL LOADS (PSF)			
	ZONES 1 & 2E		ZONES 2N, 2R, & 3E		ZONE 3R		ZONE 4		ZONE 5	
	POS	NEG	POS	NEG	POS	NEG	POS	NEG	POS	NEG
10	20.2	47.4	20.2	66.0	20.2	77.2	28.8	30.7	28.8	36.3
50	17.1	31.5	17.1	47.4	17.1	53.8	26.5	28.4	26.5	31.7
100	16.0	19.5	16.0	39.4	16.0	43.7	25.5	27.4	25.5	29.7

NOTES:
1. VALUE OF DIMENSION a = 7.4 FT
2. REFER TO ASCE 7-16 FIGURE 30.3-2B FOR ROOF ZONE INFORMATION
3. REFER TO ASCE 7-16 FIGURE 30.3-1 FOR WALL ZONE INFORMATION

CAST-IN-PLACE CONCRETE

1. THE ADDITION OF WATER TO THE CONCRETE MIX AT THE JOB SITE IS NOT PERMITTED UNLESS SPECIFICALLY APPROVED BY THE STRUCTURAL ENGINEER OF RECORD. ALL ADDITION OF WATER ON SITE MUST BE DOCUMENTED PER C94 AND MUST NOT EXCEED THE REQUIRED W/C RATIO.
2. CONSTRUCTION JOINTS IN CONCRETE ELEMENTS MUST BE SUBMITTED TO THE CONTRACTING OFFICER FOR REVIEW AND APPROVAL IN THE SHOP DRAWING SUBMITTAL PHASE. ALL REINFORCING MUST BE CONTINUOUS THROUGH THE CONSTRUCTION JOINTS.
3. ALL SURFACES OF CONSTRUCTION JOINTS MUST BE CLEANED TO REMOVE DUST, CHIPS OR OTHER FOREIGN MATTER PRIOR TO PLACING ADJACENT CONCRETE.
4. PREFORMED JOINT FILLERS FOR ISOLATION JOINTS MUST CONFORM WITH ASTM D994, ASTM D1751, AND ASTM D1752. MATERIALS, DESIGN, AND INSTALLATION OF JOINT SEALANTS MUST FOLLOW THE GUIDANCE PROVIDED IN ACI 504R.
5. CONCRETE WATERSTOPS AND JOINT MATERIALS MUST BE AS INDICATED ON THE DRAWINGS AND CONFORM TO SPECIFICATION SECTION 03 30 00.
6. PROVIDE ¾ INCH CHAMFERS TO ALL EXPOSED CORNERS, UNLESS OTHERWISE NOTED.
7. DESIGN AND CONSTRUCT ALL FORMWORK CONFORMING TO SPECIFICATION SECTION 03 30 00 CAST-IN-PLACE CONCRETE.
8. CURE AND PROTECT CONCRETE CONFORMING TO SPECIFICATION SECTION 03 30 00 CONCRETE.
9. ALL AREAS IN WHICH CONCRETE IS TO BE PLACED MUST BE THOROUGHLY CLEANED. EXISTING CONCRETE OR CONCRETE FROM A PREVIOUS POUR MUST BE CLEANED AND ROUGHENED TO PROVIDE A BONDABLE SURFACE. CONCRETE FORMS EXCEPT THOSE WHICH HAVE BEEN TREATED WITH OILS, WAXES OR OTHER BOND BREAKERS MUST BE THOROUGHLY WET PRIOR TO PLACEMENT.
10. PROTECT CONCRETE WORK FROM THE DETRIMENTAL EFFECTS OF COLD TEMPERATURES IN COMPLIANCE WITH ACI 306 AND OF HOT WEATHER OR WINDY CONDITIONS IN COMPLIANCE WITH ACI 305.
11. MASS CONCRETE ELEMENTS MUST INCLUDE MAT FOUNDATIONS, AND OTHER ELEMENTS SPECIFIED IN THE CONTRACT DRAWINGS THAT MEET THE REQUIREMENTS OF HAVING ITS LEAST DIMENSION MEASURING 24 INCHES OR GREATER AND HAVING THE POTENTIAL FOR LOCALLY EXCEEDING THE LIMITS DEFINED IN SPECIFICATION SECTION 03 30 00.

US Army Corps of Engineers ®

MARK	DESCRIPTION	DATE

DESIGNED BY: CRH
DRAWN BY: CRH
CHECKED BY: ELP
SUBMITTED BY: CRH
ISSUE DATE: AUGUST 29, 2025
SOLICITATION NO.: W912DS23F0031
CONTRACT NO.: W912DS19DD007
SIZE: ANSI D

US ARMY CORPS OF ENGINEERS
NEW YORK DISTRICT
26 FEDERAL PLAZA, NEW YORK, NY 10278

CHILD DEVELOPMENT CENTER
USAG FORT HAMILTON, NEW YORK
PROJECT NO. 75662

GENERAL NOTES & DESIGN CRITERIA

SHEET ID

S-001

GENERAL NOTES CONTINUED

CONCRETE REINFORCEMENT

1. ALL CONCRETE REINFORCING MUST CONFORM TO ASTM A615, GRADE 60 AND SPECIFICATION SECTION 03 30 00.
2. MINIMUM CONCRETE COVER FOR REINFORCEMENT BARS MUST BE AS INDICATED BELOW (UNO). ALL OTHER CONCRETE MUST BE IN ACCORDANCE WITH ACI 318. PROVIDE STANDARD BAR CHAIRS AND SPACERS AS REQUIRED TO MAINTAIN THE REQUIRED CONCRETE PROTECTION.
   a. UNFORMED CONCRETE CAST AGAINST THE GROUND 3 IN
   b. FORMED CONCRETE EXPOSED TO WEATHER OR IN CONTACT WITH THE GROUND 2 IN
   c. SLABS AND WALLS NOT EXPOSED TO WEATHER OR IN CONTACT WITH THE GROUND 0.75 IN
   d. BEAMS AND COLUMNS NOT EXPOSED TO WEATHER ON IN CONTACT WITH THE GROUND 1.5 IN
3. ALL LAP SPLICES MUST BE CLASS B TENSION SPLICES AND CONFORM TO THE TABLE SHOWN IN THESE NOTES. WHERE BARS OF DIFFERENT SIZES ARE TO BE SPLICED, THE LENGTH FOR ALL BARS MUST BE THAT REQUIRED FOR THE LARGEST BAR SIZE.
4. EMBEDMENT LENGTHS AND STANDARD HOOKS MUST CONFORM WITH THE REINFORCEMENT LENGTH SHOWN IN THE TABLE IN THESE NOTES AND ACI 318.
5. FIELD BENDING OF REINFORCEMENT BARS PARTIALLY EMBEDDED IN CONCRETE WILL NOT BE APPROVED.
6. REINFORCING BARS MUST BE CONTINUOUS AT ALL CORNERS UNLESS OTHERWISE NOTED.
7. STIRRUPS AND TIES MUST HAVE 135° HOOKS PER ACI 318.
8. NO WELDING OF REINFORCEMENT WILL BE PERMITTED UNLESS SPECIFICALLY CALLED FOR AND REVIEWED BY THE CONTRACTING OFFICER. WHERE WELDING IS PERMITTED, WELDING OF REINFORCING BARS MUST CONFORM TO AWS D1.4, "STRUCTURAL WELDING CODE - REINFORCING STEEL".
9. BAR SPACING INDICATED ON THE DRAWINGS IS A MAXIMUM. ACTUAL SPACING OF REINFORCEMENT WILL BE DICTATED BY THE CONCRETE GEOMETRY AND THE DIMENSIONS INDICATED ON THE DRAWINGS.
10. SUPPORTS FOR REINFORCEMENT MUST BE WIRE BARE TYPE SUPPORTS COMPLYING WITH CRSI SPECIFICATIONS.

FOUNDATIONS

1. ALL EXCAVATION WORK MUST PROCEED WITH CAUTION TO AVOID DAMAGE TO UNKNOWN UNDERGROUND UTILITIES OR OTHER OBSTRUCTIONS.
2. EVERY EFFORT MUST BE MADE TO PLACE CONCRETE FOR FOOTINGS ON THE SAME DAY THAT THE EXCAVATION IS COMPLETED. IF SUBGRADES ARE LEFT OPEN FOR MORE THAN ONE DAY, THE EXCAVATION MUST BE PROTECTED AND THE SUBGRADE MUST BE EVALUATED PRIOR TO CONCRETE PLACEMENT.
3. STANDARD PROCEDURES FOR FROST PROTECTION OF FOUNDATIONS AND EXCAVATIONS MUST BE EMPLOYED FROM NOVEMBER 1 TO MARCH 31 WINTER CONSTRUCTION. BACKFILLING OF EXCAVATIONS MUST BE DONE AS SOON AS POSSIBLE TO PROTECT FOUNDATIONS FROM FROST.
4. VAPOR RETARDER MUST BE PROVIDED BENEATH ALL INTERIORS SLABS ON GRADE. THE VAPOR RETARD MUST BE INSTALLED IN ACCORDANCE WITH CURRENT ACI 302.1 RECOMMENDATIONS.
5. IT IS THE CONTRACTOR'S RESPONSIBILITY TO MAINTAIN ADEQUATE WATER CONTROL AT ALL TIMES ON SITE. STANDING WATER AND/OR SATURATED UNSTABLE SOIL CONDITIONS WILL NOT BE TOLERATED IN AREA TO RECEIVE FOUNDATIONS OR UTILITIES.
6. CONTRACTOR MUST PROVIDE FOR DESIGN AND INSTALLATION OF ALL CRIBBING, SHEATHING AND SHORING REQUIRED; AND MUST BE SOLELY RESPONSIBLE FOR ALL EXCAVATION PROCEDURES INCLUDING LAGGING SHORING AND PROTECTION OF ADJACENT PROPERTY, STRUCTURES, STREETS AND UTILITIES IN ACCORDANCE WITH ALL NATIONAL, STATE AND LOCAL SAFETY ORDINANCES.
7. ALL EXCAVATIONS MUST BE PROPERLY BACKFILLED. DO NOT PLACE BACKFILL BEHIND RETAINING WALLS BEFORE CONCRETE OR GROUT HAS ATTAINED FULL DESIGN STRENGTH. CONTRACTOR MUST BRACE OR PROTECT ALL BUILDING AND PIT WALLS BELOW GRADE FROM LATERAL LOADS UNTIL ATTACHED FLOORS ARE COMPLETELY IN PLACE AND HAVE ATTAINED FULL STRENGTH. CONTRACTOR MUST PROVIDE FOR DESIGN, PERMITS AND INSTALLATION OF SUCH BRACING.
8. ALL COLUMN DOWELS AND ANCHOR BOLTS MUST BE SET BY A TEMPLATE METHOD PRIOR TO CONCRETE PLACEMENT, UNLESS SPECIFICALLY NOTED TO BE AFTER SET ANCHORS.
9. SEE SPECIFICATIONS SECTION 31 00 00 FOR BACKFILLING TRENCHES WHEN REQUIRED TO REMOVE OLD STORM/SANITARY DRAINS IN AREAS CONFLICTING WITH PROPOSED FOOTINGS OR ON-GRADE SLABS.

MASONRY

1. MORTAR FOR CONCRETE MASONRY UNITS MUST CONFORM TO ASTM C270 TYPE M/S. MORTAR CEMENTITIOUS MATERIAL MUST BE LIMITED TO PORTLAND CEMENT AND LIME.
2. REINFORCING FOR CONCRETE MASONRY MUST CONFORM TO ASTM A615 GRADE 60.
3. PROVIDE A MINIMUM OF 5/8" CLEAR BETWEEN MAIN REINFORCING AND MASONRY UNITS.
4. ALL CELLS AND BOND BEAMS WITH REINFORCEMENT MUST BE FILLED SOLID WITH GROUT. GROUT FOR MASONRY MUST CONFORM TO ASTM C476.
5. ALL MORTAR FACE SHELL JOINTS IN MASONRY WALLS (HORIZONTAL AND VERTICAL) MUST BE FILLED 100% WITH MORTAR.
6. PROVIDE BRACING OR MASONRY WALLS DURING CONSTRUCTION. BRACING SYSTEM MUST BE DESIGNED BY A PROFESSIONAL ENGINEER.
7. GROUTING PROCEDURES FOR "LOW LIFT" AND "HIGH LIFT" GROUTING MUST BE PER SPECIFICATION SECTION 04 20 00. PROVIDE CLEANOUT OPENINGS AT THE BOTTOM OF EACH GROUT LIFT AT EACH CELL TO BE FILLED WITH GROUT WHERE "HIGH LIFT" GROUTING IS TO BE USED.
8. REINFORCE MASONRY WHERE SHOWN ON STRUCTURAL DRAWINGS. TIE REINFORCING IN POSITION AND PLACE GROUT AROUND REINFORCING. DO NOT PUSH REINFORCING DOWN INTO PREVIOUSLY PLACED GROUT FILL. SET BOLTS SIMILARLY.
9. TIE MASONRY WYTHES WITH HORIZONTAL REINFORCING AS INDICATED BY THE DETAILS. HORIZONTAL REINFORCING TO BE CONTINUOUS AND PROVIDED AT BOND BEAMS WITH MAX SPACING OF 48".
10. PROVIDE VERTICAL BARS, SIZE MATCHING WALL REINFORCING, AT ALL CORNERS, ENDS OF WALLS, EACH SIDE OF CONTROL JOINTS AND EACH SIDE OF WALL OPENINGS PER THE TYPICAL DETAILS. TIE EACH BAR TO THE FOUNDATION WITH A MATCHING DOWEL. SEE ARCHITECTURAL DRAWINGS FOR LOCATIONS OF CONTROL JOINTS.
11. ALL CORNERS AND INTERSECTIONS OF STRUCTURAL MASONRY WALLS MUST BE CONSTRUCTED BY INTERLOCKING COURSES.
12. ALL LINTELS MUST HAVE SUFFICIENT BEARING LENGTH ON EACH SIDE OF OPENINGS AS PROVIDED BY SPECIFICATION SECTION 04 20 00.

GROUT

1. HIGH STRENGTH, NON-SHRINK, NON-METALLIC CEMENTITIOUS GROUT MUST BE USED AND CONFORM TO ASTM C1107.
2. THE MINIMUM GROUT STRENGTH MUST BE 3000 PSI AT 28 DAYS.
3. ALL SURFACES THAT COME INTO CONTACT WITH GROUT SHOULD BE CLEAN AND FREE OF DIRT, OIL, GREASE, LAITANCE AND OTHER CONTAMINANTS THAT MAY ACT AS BOND BREAKERS. THE CONCRETE SURFACE MUST BE ROUGHENED AND DAMPENED PRIOR TO PLACING GROUT.

POST-INSTALLED ANCHORS

1. CARE MUST BE TAKEN IN PLACING POST-INSTALLED ANCHORS TO AVOID CONFLICTS WITH THE EXISTING REBAR. HOLES MUST BE DRILLED AND CLEANED IN ACCORDANCE WITH THE MANUFACTURER'S WRITTEN INSTRUCTIONS.
2. CONCRETE AT THE TIME OF ADHESIVE ANCHOR INSTALLATION MUST HAVE A MINIMUM AGE OF 21 DAYS. CONCRETE TEMPERATURE AT THE TIME OF INSTALLATION MUST BE AT LEAST 50 DEGREES F. ADHESIVES MUST BE STORED AND INSTALLED AT THE SERVICE TEMPERATURE RANGES RECOMMENDED BY THE MANUFACTURER.
3. ANCHORS MUST BE INSTALLED IN HOLES DRILLED WITH A ROTARY IMPACT HAMMER DRILL OR ROCK DRILL. HOLES MUST BE THOROUGHLY CLEANED PRIOR TO ADHESIVE INJECTION, AS REQUIRED BY THE MANUFACTURER'S PRINTED INSTALLATION INSTRUCTIONS. ANCHORS TO BE INSTALLED IN THE ADHESIVE MUST BE CLEAN, OIL-FREE AND FREE OF LOOSE RUST, PAINT OR OTHER COATINGS.
4. INSTALLED ADHESIVE ANCHORS MUST BE SECURELY FIXED IN-PLACE TO PREVENT DISPLACEMENT WHILE THE ADHESIVE CURES. UNLESS SHOWN OTHERWISE ON THE DRAWINGS, ANCHORS MUST BE INSTALLED PERPENDICULAR TO THE CONCRETE SURFACE. ANCHORS DISPLACED BEFORE FULL ADHESIVE CURE MUST BE CONSIDERED DAMAGED AND REPLACED AT NO ADDITIONAL COST TO THE GOVERNMENT.

STRUCTURAL STEEL

1. ALL DIMENSIONS MUST BE VERIFIED IN THE FIELD BY THE CONTRACTOR PRIOR TO THE FABRICATION OF STEEL.
2. ALL BOLTED CONNECTIONS MUST BE INSTALLED IN ACCORDANCE WITH THE RCSC "SPECIFICATION FOR STRUCTURAL JOINTS USING HIGH-STRENGTH BOLTS"
3. SURFACE PREPARATION AND COATING OF STEEL SURFACES AND WELDS, WHETHER THE LOCATION OF THE WORK IS IN THE FIELD OR IN THE SHOP, MUST MEET THE REQUIREMENTS OF SSPC-SP10. PREPARE ALL STEEL SURFACES TO BE COATED BY ABRASIVE BLASTING IN ACCORDANCE WITH SSPC-SP10 USING EXPENDABLE BLAST MEDIA.
4. TOUCH-UP OF COATINGS MUST BE PERFORMED AT ALL LOCATIONS OF DAMAGED, DEFECTIVE OR FAILED COATING. TOUCH-UP MUST BE PERFORMED WITH THE SAME COATING USED FOR THE EXISTING OR ORIGINAL COAT. TOUCH-UP SHOULD BE IN ACCORDANCE WITH THE MANUFACTURER'S RECOMMENDATIONS.
5. ALL BOLTED CONNECTIONS MUST BE PROVIDED WITH HEAVY HEX BOLTS WITH NUTS AND WASHERS UNLESS OTHERWISE NOTED.
6. ALL SHOP DRAWINGS MUST CLEARLY INDICATE SEPARATION OF DISSIMILAR METALS. WHERE RELIABLE SEPARATION IS NOT POSSIBLE, THE SMALLER ELEMENT MUST BE THE NOBLER ELEMENT.
7. MINIMUM THICKNESS FOR CONNECTING AND STIFFENER PLATES MUST BE 1/4" UNLESS OTHERWISE NOTED.
8. PENETRATIONS THROUGH STEEL BEAMS SHOWN ON THESE DRAWINGS IS PROHIBITED.

WELDING

1. ALL WELDING AND FABRICATION MUST CONFORM WITH THE AMERICAN WELDING SOCIETY (AWS) D1.1 REQUIREMENTS AND GUIDELINES AND SPECIFICATION SECTION 05 05 23.16.
2. ALL WELDS USED MUST COMPLY WITH AWS D1.1 SPECIFICATION AND MUST BE E70XX LOW HYDROGEN.
3. THE CONTRACTOR MUST QUALIFY WELDING PROCESSES AND WELDING OPERATORS IN ACCORDANCE WITH THE APPLICABLE AWS D1.1 WELDING CODE AND MUST PROVIDE CERTIFICATION THAT WELDERS TO BE EMPLOYED IN THE WORK HAVE SATISFACTORILY PASSED AWS QUALIFICATION TESTS.
4. WRITTEN WELDING PROCEDURES DEMONSTRATING COMPLIANCE WITH THE AWS REQUIREMENTS MUST BE SUBMITTED TO THE CONTRACTING OFFICER FOR APPROVAL.
5. ANY DEFECTS MUST BE CORRECTED IN ACCORDANCE WITH AWS D1.1 RULES AT NO ADDITIONAL COST.
6. WHEN FILLET WELD SIZES ARE NOT INDICATED, PROVIDE MINIMUM WELD SIZE IN ACCORDANCE WITH AISC SPECIFICATIONS TABLE J2.4 OR 3/16" WHICHEVER IS GREATER.
7. WELD ACCESS HOLES ARE PERMITTED AND MUST MEET THE REQUIREMENTS OF AISC 360.
8. A WELDS MUST BE FREE OF BURRS, GOUGES OR NICKS. NO SHARP EDGES WILL BE ALLOWED. GRIND WHERE REQUIRED.
9. BACKING BARS MUST BE REMOVED UNLESS OTHERWISE NOTED.
10. BUTT JOINTS, IF ANY, MUST BE MADE TIGHT AND FLUSH BEFORE WELDING. ALL EXPOSED JOINTS MUST BE GROUND FLUSH AND SMOOTH WITH ADJACENT FINISHED SURFACES. ALL SHARP EDGES MUST BE GROUND SMOOTH.

COLD-FORMED STEEL TRUSSES

1. THE DESIGN AND FABRICATION OF COLD FORMED STEEL MEMBERS MUST CONFORM TO THE REQUIREMENTS OF THE 2016 EDITION OF THE "AISI STANDARD DESIGN OF COLD-FORMED STEEL STRUCTURAL MEMBERS."
2. NO CONSTRUCTION LOADS MAY BE PLACED ON FRAMING UNTIL BRIDGING IS INSTALLED AND BEARING CONNECTIONS HAVE BEEN BOLTED OR WELDED PER PLANS TYPICAL.
3. SHOP DRAWINGS AND TRUSS CALCULATIONS MUST BE SIGNED AND SEALED BY A LICENSED STRUCTURAL ENGINEER IN THE STATE OF THE WORK. SUCH SEALS MUST NOT BE CONSTRUED AS APPROVAL OF OR RESPONSIBILITY FOR THE BUILDING SYSTEM OR ANY COMPONENTS OTHER THAN THE COLD FORMED STEEL TRUSSES AND OTHER LIGHT GAGE ROOF FRAMING THEMSELVES. THE SEAL IS INTENDED TO CONVEY THAT THE TRUSSES HAVE BEEN DESIGNED FOR THE LOADS SHOWN ON THE DRAWINGS.
4. DEFLECTION MUST BE LIMITED TO THE FOLLOWING:
   a. TOTAL LOAD DEFLECTION MUST NOT EXCEED L/240
   b. LIVE LOAD DEFLECTION MUST NOT EXCEED L/360
5. HORIZONTAL AND DIAGONAL BRIDGING MEETING THE REQUIREMENTS OF "AISI STANDARD DESIGN OF COLD-FORMED STEEL STRUCTURAL MEMBERS" MUST BE PROVIDED BY THE COLD-FORMED MANUFACTURER.
6. MINIMUM TRUSS MATERIAL MUST BE 16 GA FOR ALL TOP CHORDS AND 18 GA FOR ALL OTHER TRUSS MEMBERS.
7. COORDINATE TRUSS LOCATIONS, INCLUDING SMALL FRAMING, FOR ROOFTOP MECHANICAL UNITS AND PENETRATIONS. THE TRUSS MANUFACTURER IS RESPONSIBLE FOR SMALL FRAMING AROUND ROOF OPENINGS.

LIGHT GAUGE STEEL FRAMING

1. DIMENSIONS SHOWN IN THIS PACKAGE ARE FOR DESIGN REFERENCE ONLY. CONTRACT DRAWINGS SHOULD BE USED IN DETERMINING EXACT DISTANCES AND ALL CONDITIONS SHOULD BE FIELD VERIFIED BEFORE ERECTION. ALL LIGHT GAUGE METAL FRAMING MUST BE FABRICATED IN ACCORDANCE WITH AISI S100-16 SPECIFICATIONS.
2. PROVIDE SHOP DRAWINGS INCLUDING SHAPES, GAUGES, SIZES, SPACINGS, LOCATIONS AND CONNECTIONS.
3. ALL COLD FORMED SECTIONS TO BE DESIGNED PER AISI CODE AND DESIGN CRITERIA. ALL DRAWINGS TO BE SIGNED & SEALED BY PROFESSIONAL ENGINEER OF THE STATE WHERE BUILDING IS CONSTRUCTED.
4. STUD FRAMING TO HAVE A DESIGN YIELD STRENGTH OF 50 KSI UNLESS OTHERWISE NOTED.

ENGINEERING REQUIREMENTS FOR THE CONTRACTOR

1. DELEGATED ENGINEERED SYSTEMS INCLUDE, BUT ARE NOT LIMITED TO, THE FOLLOWING ITEMS:
   a. SHEAR CONNECTIONS FOR STEEL FRAMING
   b. TRUSS CONNECTIONS FOR TRUSS FRAMING
   c. ALL COLD-FORMED STEEL FRAMING, INCLUDING BUT NOT LIMITED TO:
      i. TRUSS OVERFRAMING AT ENTRY GABLE
      ii. A SECONDARY FRAMING SYSTEM TO SUPPORT MEP COMPONENTS AND CEILINGS AT T.O. WALL FRAMING LEVEL
      iii. NONSTRUCTURAL INTERIOR WALLS
      iv. LIGHT GAUGE STUD BACKUP WALLS FOR EXTERIOR FACADES
   d. SEISMIC DESIGN AND ANCHORAGE OF NONSTRUCTURAL COMPONENTS
   e. TEMPORARY BRACING AND SHORING

CMU REINFORCING DEVELOPMENT AND SPLICES
f'm=2000 PSI, NORMAL WEIGHT MASONRY

BAR SIZE	DEVELOPMENT LENGTH	LAP SPLICE LENGTH
#3	1' - 0"	2' - 3"
#4	1' - 6"	3' - 0"
#5	2' - 4"	3' - 9"
#6	4' - 3"	4' - 6"
#7	5' - 10"	5' - 10"
#8	8' - 9"	8' - 9"
#9	11' - 2"	11' - 2"
#10	14' - 1"	14' - 1"
#11	17' - 5"	17' - 5"

NOTES:
1. TABLE IS CALCULATED IN ACCORDANCE WITH TMS 402/602-16 AND IBC 2021.

CONCRETE REINFORCING DEVELOPMENT AND SPLICES
f'c=4000 PSI, NORMAL WEIGHT CONCRETE

BAR SIZE	DEVELOPMENT LENGTH		LAP SPLICE LENGTH	
	TOP	OTHER	TOP	OTHER
#3	1' - 7"	1' - 3"	2' - 1"	1' - 7"
#4	2' - 1"	1' - 7"	2' - 9"	2' - 1"
#5	2' - 7"	2' - 0"	3' - 5"	2' - 7"
#6	3' - 1"	2' - 5"	4' - 1"	3' - 1"
#7	4' - 6"	3' - 6"	5' - 11"	4' - 6"
#8	5' - 2"	4' - 0"	6' - 9"	5' - 2"
#9	5' - 10"	4' - 6"	7' - 7"	5' - 10"
#10	6' - 7"	5' - 1"	8' - 6"	6' - 7"
#11	7' - 3"	5' - 7"	9' - 6"	7' - 3"

NOTES:
1. TABLE IS CALCULATED IN ACCORDANCE WITH ACI 318-19 TABLE 25.4.2.2.
2. LAP SPLICES SHOWN IN THIS TABLE ARE CLASS B LAP SPLICES. ALL REBAR SPLICES MUST BE CLASS B LAP SPLICES UNLESS EXPLICITLY STATED OTHERWISE.
3. "TOP" BARS ARE ALL HORIZONTAL BARS WITH MORE THAN 12" OF CONCRETE BELOW, PER ACI 318-19 TABLE 25.4.2.5. ALL BARS WHICH DO NOT MEET THIS DEFINITION MAY BE CONSIDERED "OTHER" BARS.

CONCRETE EXPOSURE CLASSES

	CATEGORY			
MEMBER	F	S	W	C
FOOTINGS, INTERIOR SLABS-ON-GRADE	F0	S0	W0	C0
FROST WALLS	F1	S0	W1	C1
EXTERIOR SLABS-ON-GRADE	F2	S0	W1	C1

US Army Corps of Engineers ®

MARK	DESCRIPTION	DATE

ISSUE DATE: AUGUST 29, 2025
SOLICITATION NO.: W912DS23F0031
CONTRACT NO.: W912DS19DD007

DESIGNED BY: CRH
DRAWN BY: CRH
CHECKED BY: BE
SUBMITTED BY: CRH
SIZE: ANSI D

US ARMY CORPS OF ENGINEERS
NEW YORK DISTRICT
26 FEDERAL PLAZA, NEW YORK, NY 10278

CHILD DEVELOPMENT CENTER
USAG FORT HAMILTON, NEW YORK
PROJECT NO. 75662

GENERAL NOTES

SHEET ID
S-002

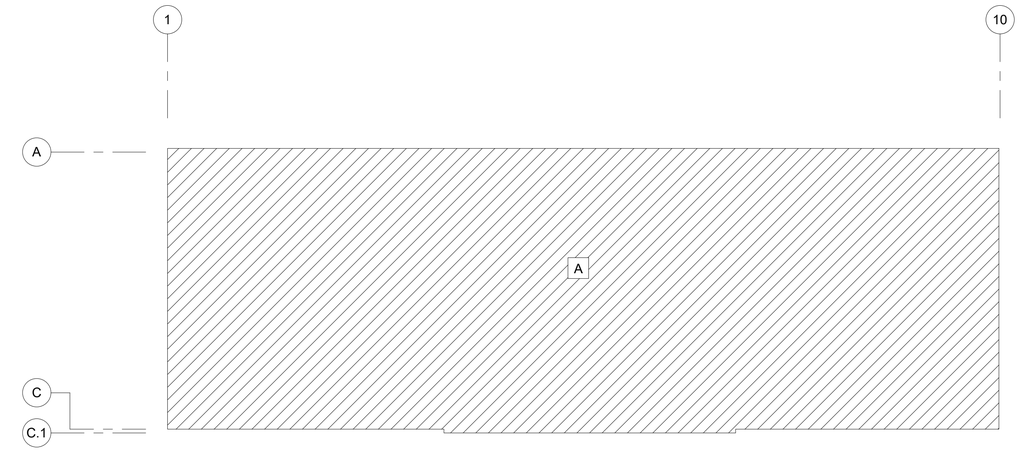

1 FIRST FLOOR LOADING PLAN
NTS

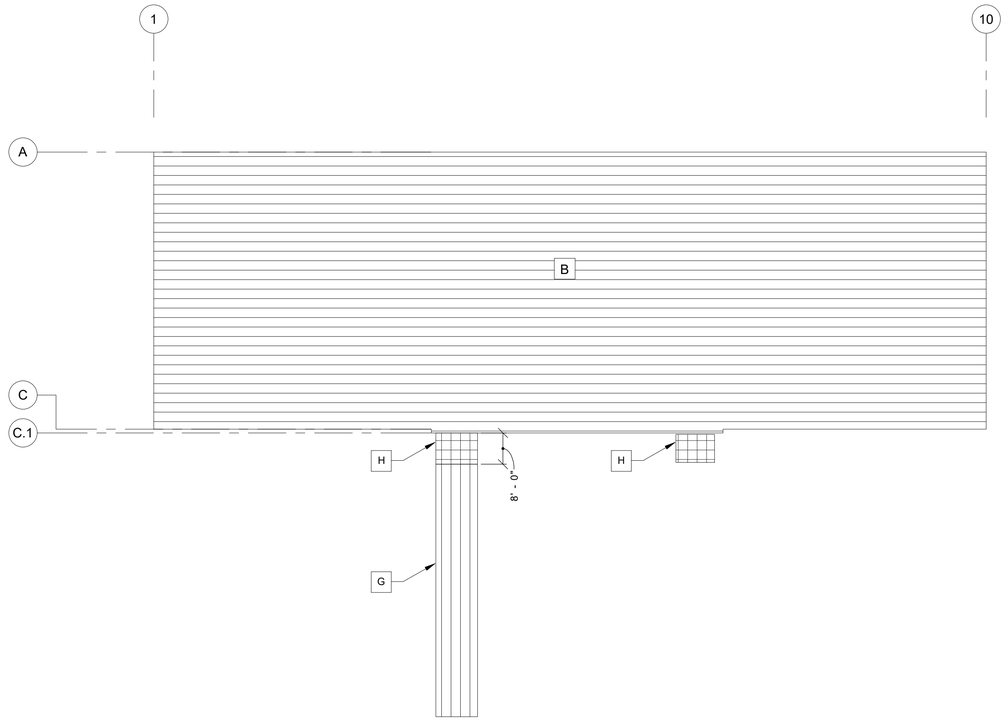

2 T.O. WALL LOADING PLAN
NTS

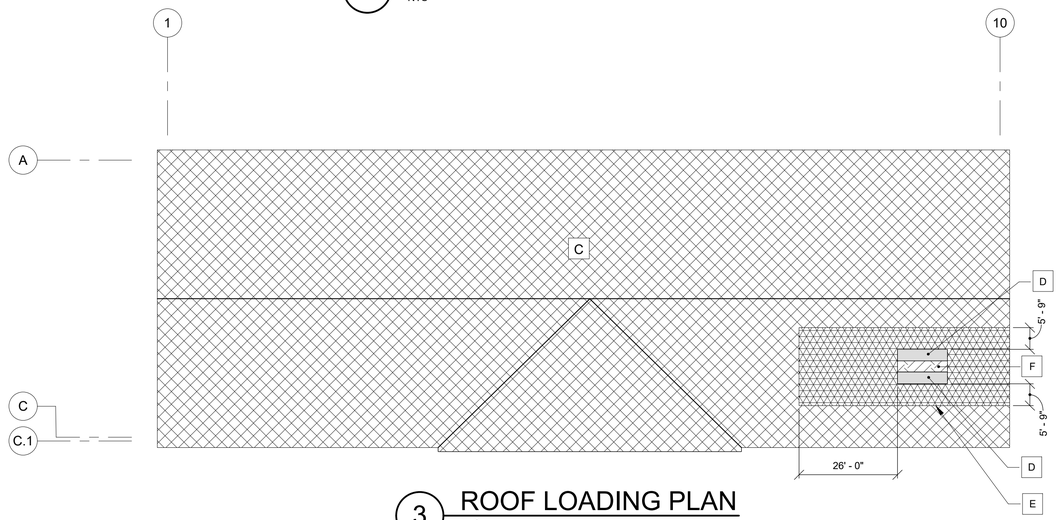

3 ROOF LOADING PLAN
NTS

LOADING PLAN SCHEDULE

KEY	A	B	C	D	E	F	G	H
USE	FIRST FLOOR CORRIDORS AND PUBLIC ROOMS	HUNG MEP AND CEILINGS WITHOUT STORAGE[8]	TYPICAL ROOF	ROOF PLATFORM LOAD	SNOW DRIFT AROUND ROOF PLATFORMS	SNOW DRIFT BETWEEN ROOF PLATFORMS	CANOPY ROOF	CANOPY ROOF WITH SNOW DRIFT
SDL	20 PSF	10 PSF	25 PSF/35 PSF[4]	35 PSF[7]	25 PSF/35 PSF[4]	25 PSF	10 PSF/20 PSF[4]	10 PSF/20 PSF[4]
LL	100 PSF	10 PSF	20 PSF	60 PSF	20 PSF	20 PSF	20 PSF	20 PSF
SL	N/A	N/A	14 PSF[6]	30 PSF	70 PSF	50 PSF	17 PSF[5]	50 PSF

1. SDL = SUPERIMPOSED DEAD LOAD. LOADS ARE APPLIED IN ADDITION TO FRAMING AND SLAB SELF-WEIGHTS IN GRAVITY DIRECTION.
2. LL = LIVE LOAD
3. SL = SNOW LOAD
4. THE TWO VALUES SHOWN INDICATE A MINIMUM AND MAXIMUM SDL VALUE USED IN DESIGN. SEE NOTE BELOW REGARDING SOLAR PANELS.
5. AN ALLOWANCE OF 10 PSF SDL WAS INCLUDED IN THE ROOF LOADS TO ALLOW FOR POTENTIAL FUTURE SOLAR PANEL INSTALLATION. THE DESIGN LOADS ASSUME THE FUTURE SOLAR PANELS WILL NOT INCREASE SNOW LOADS OR CAUSE ANY SNOW DRIFTS AROUND OR BETWEEN SOLAR PANELS. THE SOLAR ARRAY DESIGN ENGINEER IS RESPONSIBLE FOR ENSURING THAT THE LOAD ASSUMPTIONS DESCRIBED ON THESE DRAWINGS ARE NOT EXCEEDED AND MUST EVALUATE THE ROOF STRUCTURE FOR ALL LOADS APPLIED TO IT FROM THE SOLAR ARRAY SYSTEM.
6. UNLESS NOTED OTHERWISE, THE SNOW LOAD SHOWN IN THIS TABLE IS THE MINIMUM SLOPED ROOF SNOW LOAD PER ASCE 7-16 CHAPTER 7. BALANCED AND UNBALANCED SNOW LOADS FOR GABLED ROOFS WERE CALCULATED IN ACCORDANCE WITH ASCE 7 AND APPLIED AS SHOWN IN THE UNBALANCED SNOW LOAD DIAGRAMS ON S-004.
7. THE ROOF PLATFORM IS DESIGNED AND PROVIDED BY OTHERS. THE SDL SHOWN HERE INDICATES THE ASSUMPTION MADE DURING DESIGN REGARDING THE SELF WEIGHT OF THE PLATFORM. THIS ASSUMPTION MUST BE VERIFIED AGAINST THE ROOF PLATFORM PROVIDED BY THE PLATFORM MANUFACTURER PRIOR TO STEEL FABRICATION. SEE THE ROOF TRUSS LOADING DIAGRAMS FOR MORE INFORMATION.
8. LOAD IS APPLIED TO THE BOTTOM CHORD, SEE TRUSS LOADING DIAGRAM.

PLAN NORTH

US Army Corps of Engineers ®

MARK	DESCRIPTION	DATE

ISSUE DATE: AUGUST 29, 2025
SOLICITATION NO.: W912DS23F0031
CONTRACT NO.: W912DS19D0007

DESIGNED BY: CRH
DRAWN BY: MXC
CHECKED BY: EP
SUBMITTED BY: CRH
SIZE: ANSI D

US ARMY CORPS OF ENGINEERS
NEW YORK DISTRICT
26 FEDERAL PLAZA, NEW YORK, NY 10278

CHILD DEVELOPMENT CENTER
USAG FORT HAMILTON, NEW YORK
PROJECT NO. 75662

LOADING PLANS

SHEET ID
S-003

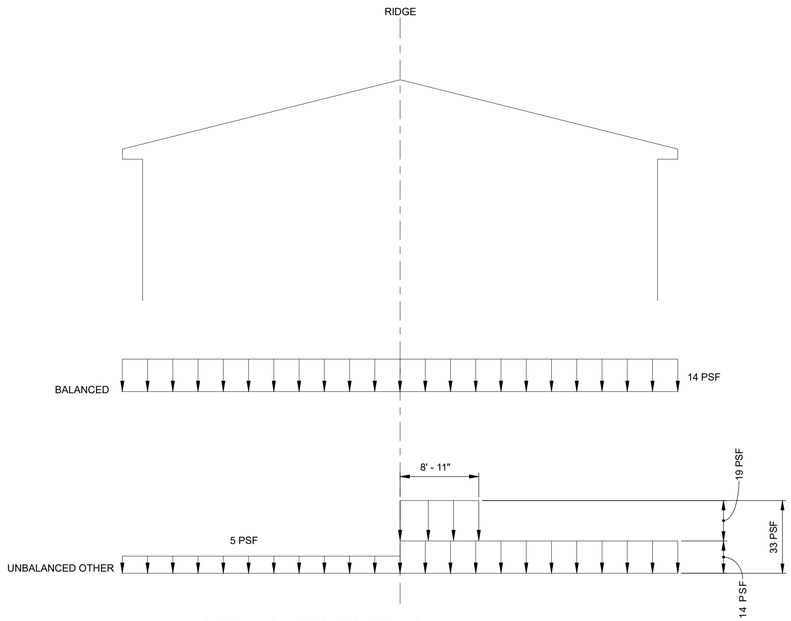

1 TYP. ROOF BALANCED AND UNBALANCED SNOW LOAD DIAGRAMS

NTS

NOTES:

1. DIAGRAMS ABOVE ARE TAKEN FROM ASCE 7-16, FIGURE 7.6-2. THESE LOADS MUST BE APPLIED TO THE LIGHT GAUGE METAL ROOF TRUSSES IN COMBINATION WITH OTHER LOADS AS REQUIRED BY ASCE 7-16.
2. ALL VALUES SHOWN IN THE DIAGRAM ARE UNFACTORED (SERVICE LEVEL) LOADS.

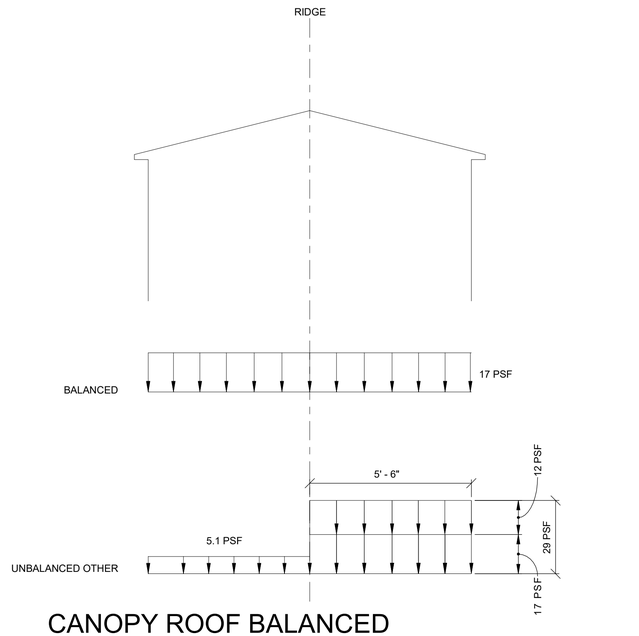

2 CANOPY ROOF BALANCED AND UNBALANCED SNOW LOAD DIAGRAMS

NTS

NOTES:

1. DIAGRAMS ABOVE ARE TAKEN FROM ASCE 7-16, FIGURE 7.6-2. THESE LOADS MUST BE APPLIED TO THE LIGHT GAUGE METAL ROOF TRUSSES IN COMBINATION WITH OTHER LOADS AS REQUIRED BY ASCE 7-16.
2. ALL VALUES SHOWN IN THE DIAGRAM ARE UNFACTORED (SERVICE LEVEL) LOADS.

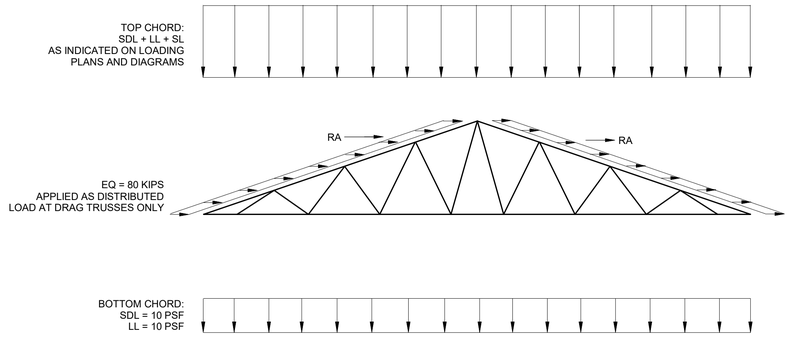

3 ROOF TRUSS LOADING DIAGRAM

NTS

NOTES:

1. RA = 3100 LB POINT LOAD APPLIED IN ALL DIRECTIONS AT ROOF FALL PROTECTION ANCHOR LOCATIONS PER ASCE 7-16. SEE S-103 AND COORDINATE WITH ARCH. DRAWINGS FOR EXACT LOCATIONS.
2. TRUSS DIMENSIONS VARY, SEE PLANS AND ELEVATIONS.
3. ALL VALUES SHOWN IN THE DIAGRAM ARE UNFACTORED (SERVICE LEVEL) LOADS.

US Army Corps of Engineers ®

MARK	DESCRIPTION	DATE

ISSUE DATE: AUGUST 29, 2025
SOLICITATION NO.: W912DS23F0031
CONTRACT NO.: W912DS19BD007

DESIGNED BY: CRH
DRAWN BY: MXC
CHECKED BY: RLD
SUBMITTED BY: CRH
SIZE: ANSI D

US ARMY CORPS OF ENGINEERS
NEW YORK DISTRICT
26 FEDERAL PLAZA, NEW YORK, NY 10278

CHILD DEVELOPMENT CENTER
USAG FORT HAMILTON, NEW YORK
PROJECT NO. 75662

LOADING DIAGRAMS

SHEET ID

S-004

T.O. WALL									T.O. WALL
14' - 8"	HSS8x6x1/2	HSS8x6x5/8	HSS8x6x1/2	HSS8x6x1/2	HSS6x6x5/8	HSS6x6x1/2	HSS8x6x5/8	HSS6x6x5/8	14' - 8"
FIRST FLOOR									FIRST FLOOR
0' - 0"									0' - 0"
Column Locations	B-2	B-3	B-4	B-5	B-6	B-7	B-8	B-9	

STEEL BASE PLATE:
- TYPE BP1 AT HSS6x6
- TYPE BP2 AT HSS8x6

(SEE TYPICAL DETAILS BELOW)

1 MAIN BUILDING COLUMN SCHEDULE

1/8" = 1'-0"

BASE PLATE TYPE	B	N	BASE PLATE THICKNESS	ANCHOR BOLT SIZE	ANCHOR BOLT TYPE
BP1	12"	12"	1"	3/4"	F1554 GR.36
BP2	12"	14"	1"	3/4"	F1554 GR.36

ANCHOR BOLT DIAMETER	MINIMUM EMBEDMENT DEPTH	MINIMUM WASHER DIAMETER	MINIMUM WASHER THICKNESS
3/4"	12"	2"	3/8"

3 TYP. BASE PLATE DETAILS

NTS

NOTES:
1. SEE COLUMN SCHEDULE FOR COLUMN TYPE AND BASE PLATE DESIGNATIONS.
2. SEE PLAN SHEETS AND SECTIONS FOR COLUMN ORIENTATION.

T.O. DECK @ CANOPY														T.O. DECK @ CANOPY
11' - 5 1/2"	HSS5x6x3/8	HSS5x6x3/8	HSS5x6x3/8	HSS5x6x3/8	HSS5x6x3/8	HSS5x6x3/8	HSS5x6x3/8	HSS5x6x3/8	HSS5x6x3/8	HSS5x6x3/8	HSS5x6x3/8	HSS5x6x3/8	HSS5x6x3/8	11' - 5 1/2"
FIRST FLOOR														FIRST FLOOR
0' - 0"														0' - 0"
Column Locations	D-4	D-4.4	D-6.7	D-7.1	D.1-4	D.1-4.4	D.2-4	D.2-4.4	D.3-4	D.3-4.4	D.4-4	D.4-4.4	E-4	E-4.4	

STEEL BASE PLATE, TYPE BP1, SEE TYPICAL DETAILS, TYP. AT ALL CANOPY COLUMNS

2 CANOPY COLUMN SCHEDULE

1/8" = 1'-0"

CONCRETE FOOTING SCHEDULE					
MARK	LENGTH	WIDTH	THICKNESS	REINF. (SHORT DIR.)	REINF. (LONG DIR.)
F4	4' - 0"	4' - 0"	1' - 0"	(5) #5 BOT.	(5) #5 BOT.
F8	8' - 0"	8' - 0"	1' - 6"	(9) #6 BOT.	(9) #6 BOT.
F9	9' - 0"	9' - 0"	1' - 6"	(10) #6 BOT.	(10) #6 BOT.
MAT A	SEE PLAN	SEE PLAN	2' - 0"	#8 T&B @ 12" O.C.	#8 T&B @ 12" O.C.
MAT B	SEE PLAN	SEE PLAN	1' - 6"	#6 T&B @ 12" O.C.	#6 T&B @ 12" O.C.
WF5	SEE PLAN	5' - 0"	1' - 6"	#6 T&B @ 12" O.C.	#6 T&B @ 12" O.C.

WALL SCHEDULE		
MARK	DESCRIPTION	REINFORCEMENT
C8	8" REINF. CONC. WALL	#5 @ 12" O.C. E.W.
C13.5	13.5" CONC. FROST WALL	(2) HORIZ. #5 TOP, #5 VERT. @ 12" O.C., SEE DETAIL
C18	18" CONC. FROST WALL	#5 @ 12" O.C. E.W., ADD'L #5 @ TOP, SEE DETAIL
M8	8" REINF. CMU WALL	(2) HORIZ. #5 @ 48" O.C., (1) VERT. #5 @ 24" O.C. UNO

PIER SCHEDULE	
MARK	DESCRIPTION
P1	18" X 18" REINF. CONCRETE PIER

NOTE:
SEE 9 / S-302 FOR REINF.

METAL DECK MINIMUM PROPERTIES						
DECK TYPE	DECK WEIGHT	BASE METAL THICKNESS	YIELD STRENGTH	EFFECTIVE MOMENT OF INERTIA	EFFECTIVE SECTION MODULUS	VERTICAL WEB SHEAR
3" TYPE N 18 GAGE DECK	3.3 PSF	0.0474 IN	40 KSI	1.268 IN^4 / FT	0.674 IN^3 / FT	5738 LB / FT

METAL DECK ATTACHMENT SCHEDULE			
DECK TYPE	SUPPORT FASTENERS	EDGE FASTENERS	SIDELAP FASTENERS
3" TYPE N 18 GAGE DECK	5/8" DIA. PUDDLE WELDS IN 24/8 PATTERN	5/8" DIA. PUDDLE WELDS @ 12" O.C.	#10 SCREWS @ 12" O.C.

US Army Corps of Engineers ®

MARK	DESCRIPTION	DATE

DESIGNED BY: CRH
DRAWN BY: MXC
CHECKED BY: BM
SUBMITTED BY: CRH
ISSUE DATE: AUGUST 29, 2025
SOLICITATION NO.: W912DS23F0031
CONTRACT NO.: W912DS19DD007
SIZE: ANSI D

US ARMY CORPS OF ENGINEERS
NEW YORK DISTRICT
26 FEDERAL PLAZA, NEW YORK, NY 10278

CHILD DEVELOPMENT CENTER
USAG FORT HAMILTON, NEW YORK
PROJECT NO. 75662

SCHEDULES

SHEET ID

S-005

NOTES:
1. DO NOT SCALE FROM THIS SHEET.

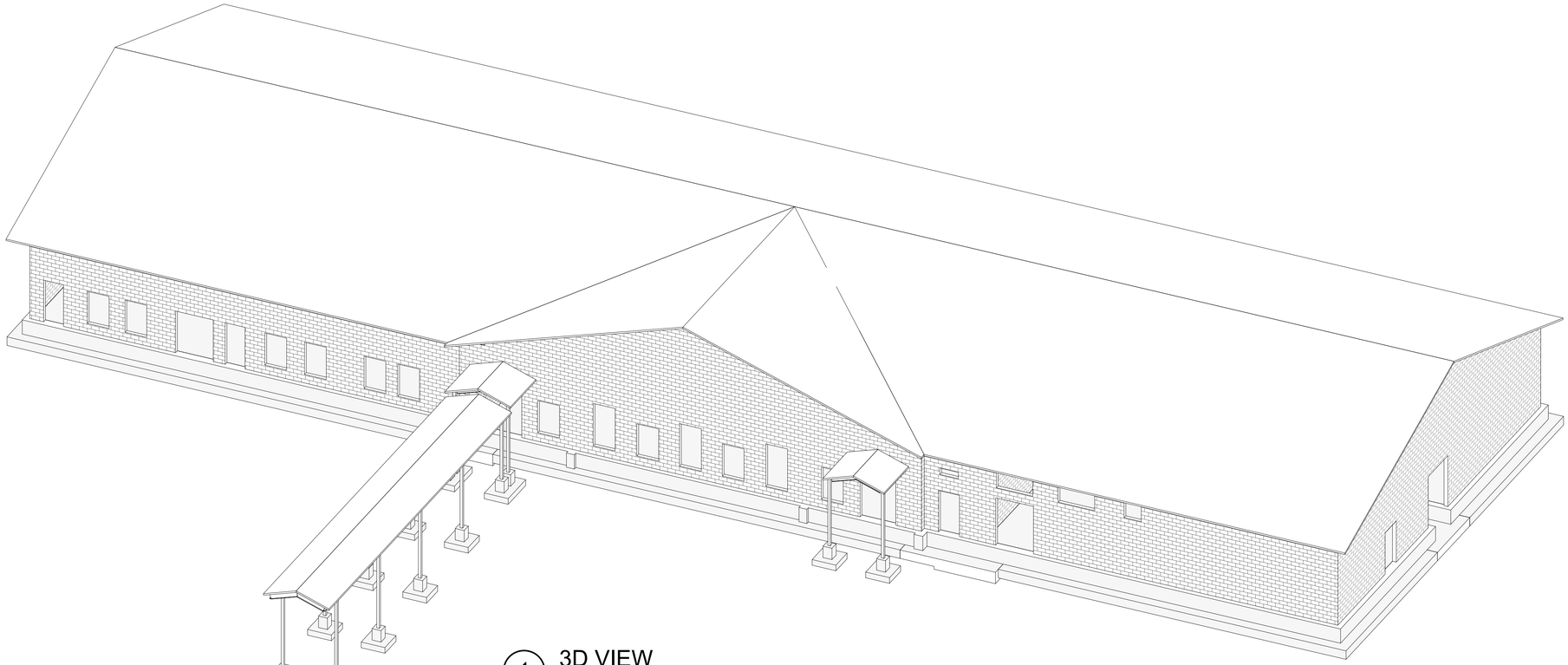

1 3D VIEW

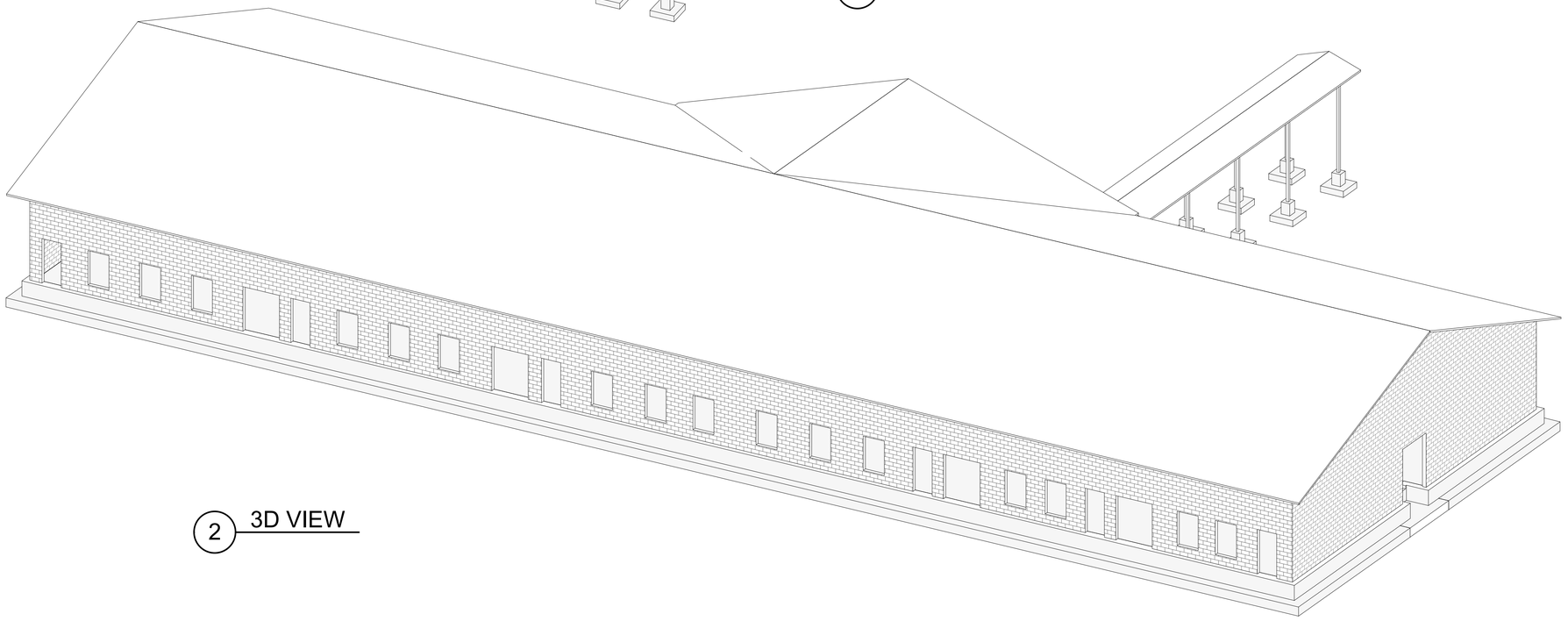

2 3D VIEW

US Army Corps of Engineers ®

MARK	DESCRIPTION	DATE

ISSUE DATE:	AUGUST 29, 2025
SOLICITATION NO.:	W912DS23F0031
CONTRACT NO.:	W912DS19D0007

DESIGNED BY: CRH	DRAWN BY: CRH	CHECKED BY: RP	SUBMITTED BY: CRH
SIZE: ANSI D			

US ARMY CORPS OF ENGINEERS
NEW YORK DISTRICT
26 FEDERAL PLAZA, NEW YORK, NY 10278

CHILD DEVELOPMENT CENTER
USAG FORT HAMILTON, NEW YORK
PROJECT NO. 75662

3D VIEWS

SHEET ID

S-006

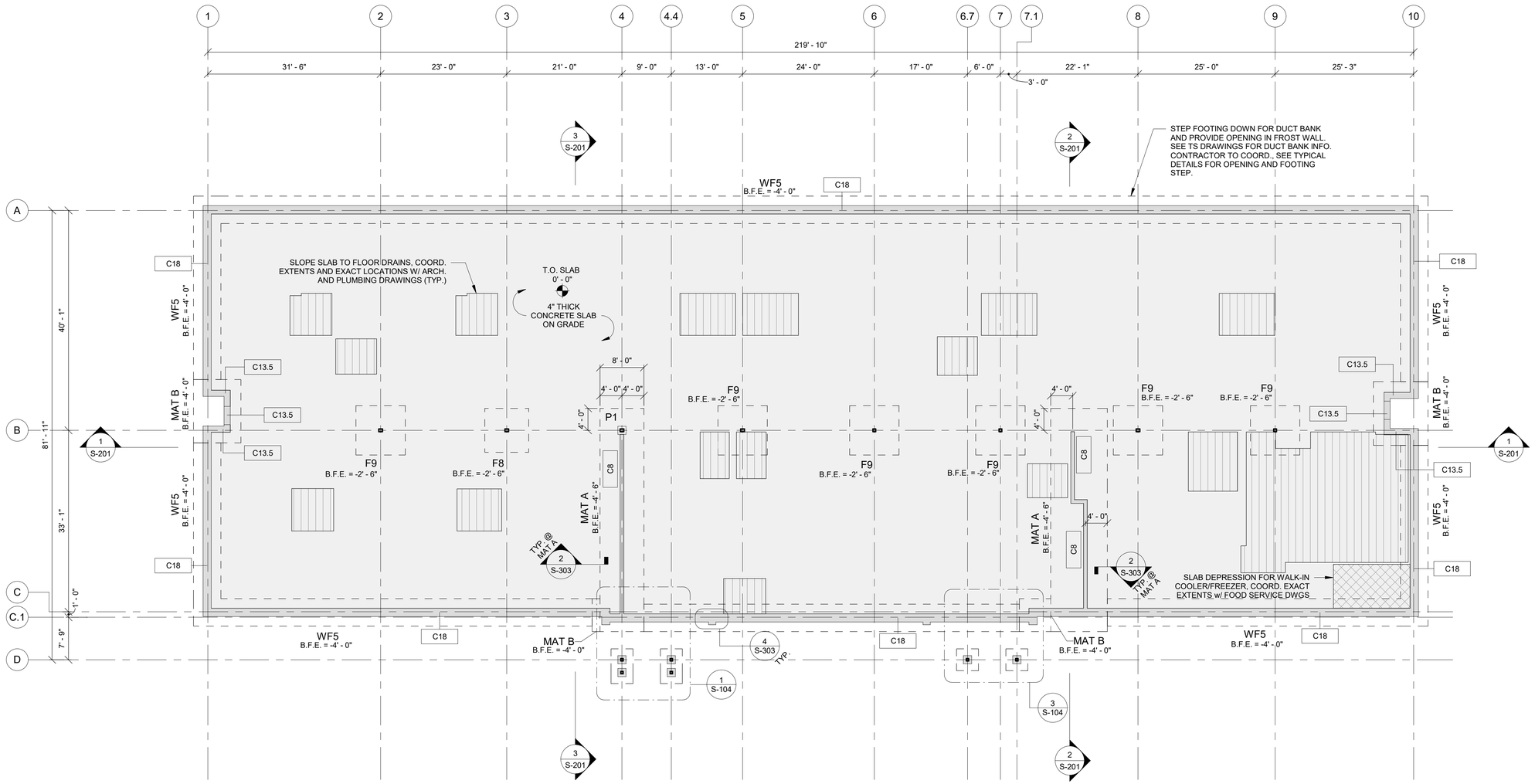

1 FIRST FLOOR SLAB AND FOUNDATION PLAN

3/32" = 1'-0"

NOTES:

1. CMU WALLS NOT SHOWN ON THIS PLAN FOR CLARITY. SEE THE T.O. WALL FRAMING PLAN.
2. ALL ELEVATIONS SHOWN ARE REFERENCED RELATIVE TO THE TOP OF FIRST FLOOR SLAB. REFER TO CIVIL DRAWINGS FOR ELEVATION OF BUILDING RELATIVE TO GLOBAL DATUMS.
3. F#: INDICATES A REINF. CONC. FTG., SEE CONCRETE FOOTING SCHEDULE.
   MAT #: INDICATES A REINF. CONC. MAT FOUNDATION, SEE CONCRETE FOOTING SCHEDULE.
   WF#: INDICATES A REINF. CONC. WALL FTG., SEE CONCRETE FOOTING SCHEDULE.
   P#: INDICATES A REINF. CONC. PIER, SEE PIER SCHEDULE.
   C#: INDICATES A CONC. WALL, SEE WALL SCHEDULE.
   M#: INDICATES A MASONRY WALL, SEE WALL SCHEDULE.
4. ALLOWABLE SOIL BEARING PRESSURE FOR FOUNDATION DESIGN = 2500 PSF
5. MIN. FROST DEPTH FOR EXTERIOR FOOTINGS = 4'-0" BELOW EXTERIOR GRADE
6. B.F.E. = BOTTOM OF FOOTING ELEVATION. CONTRACTOR TO COORDINATE THE FOOTING ELEVATIONS MARKED ON THESE DRAWINGS WITH THE CIVIL DRAWINGS AND VERIFY THE MINIMUM FROST DEPTH REQUIREMENTS ARE MET. NOTIFY USACE PRIOR TO CONSTRUCTION OF ANY CONFLICTS.
7. T.O. PIER MUST BE SET 1'-0" BELOW T.O. SLAB U.N.O.
8. T.O. FROST WALL = T.O. SLAB ELEVATION
9. PROVIDE CONTRACTION JOINTS IN SLAB ON GRADE AROUND COLUMN ISOLATION JOINTS AS ILLUSTRATED IN DETAIL 7 / S-301 AND AT 28' ON CENTER MAX.

PLAN NORTH

US Army Corps of Engineers ®

MARK	DESCRIPTION	DATE

ISSUE DATE: AUGUST 29, 2025
SOLICITATION NO.: W912DS23F0031
CONTRACT NO.: W912DS19DD007

DESIGNED BY: CRH
DRAWN BY: CRH
CHECKED BY: BLH
SUBMITTED BY: CRH
SIZE: ANSI D

US ARMY CORPS OF ENGINEERS
NEW YORK DISTRICT
26 FEDERAL PLAZA, NEW YORK, NY 10278

CHILD DEVELOPMENT CENTER
USAG FORT HAMILTON, NEW YORK
PROJECT NO. 75662

FIRST FLOOR SLAB AND FOUNDATION PLAN

SHEET ID

S-101

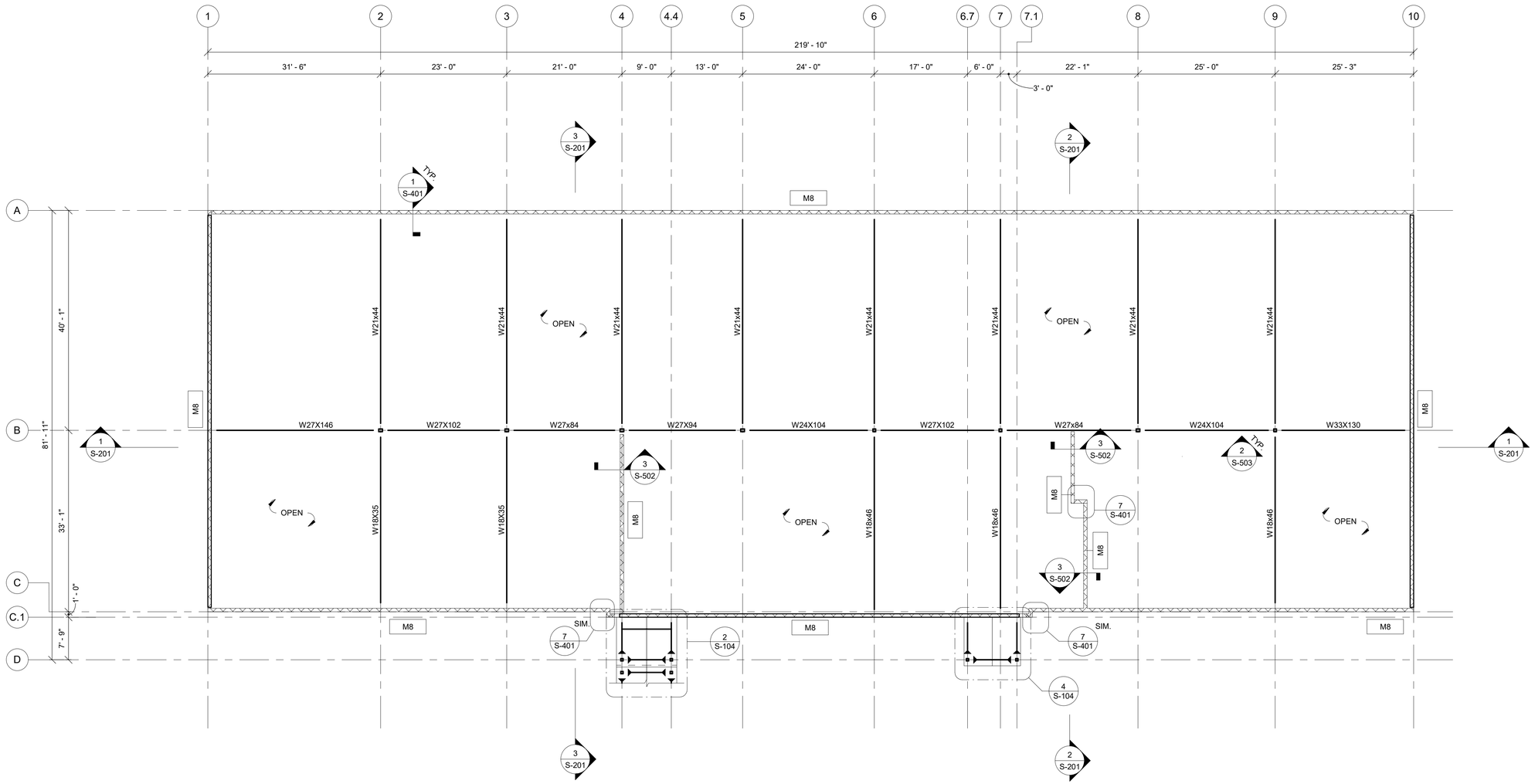

1 T.O. WALL FRAMING PLAN

3/32" = 1'-0"

NOTES:

1. ROOF TRUSSES NOT SHOWN ON THIS PLAN FOR CLARITY, SEE ROOF FRAMING PLAN.
2. ALL ELEVATIONS SHOWN ARE REFERENCED RELATIVE TO THE TOP OF FIRST FLOOR SLAB. REFER TO CIVIL DRAWINGS FOR ELEVATION OF BUILDING RELATIVE TO GLOBAL DATUMS.
3. T.O. STEEL FRAMING AT THIS LEVEL = 14'-8" UNO
4. ◀ - INDICATES A MOMENT CONNECTION
5. M#: INDICATES A MASONRY WALL, SEE WALL SCHEDULE.
6. CMU WALL OPENINGS ARE SHOWN ON THE SHEAR WALL ELEVATIONS. ALL CMU WALL OPENINGS REQUIRE CMU LINTELS AND ADDITIONAL REINFORCING.
7. OPENINGS IN BRICK FACADE ARE NOT SHOWN ON THE STRUCTURAL DRAWINGS. LOOSE LINTELS WILL BE REQUIRED TO SUPPORT BRICK FACADE ABOVE WINDOWS AND DOORS, SEE ARCH. DWGS FOR SIZE AND LOCATIONS OF WINDOWS AND DOORS.
8. ALL WF BEAM TO HSS COLUMN SHEAR CONNECTIONS WILL BE THRU PLATE CONNECTIONS, SEE TYPICAL DETAILS.
9. SUPPORT OF MEP WILL BE PROVIDED BY THE CONTRACTOR. PROVIDE A LIGHT GAUGE SYSTEM SUSPENDED FROM EITHER THE TRUSS BOTTOM CHORDS OR THE STEEL FRAMING AT THE T.O. WALL FRAMING LEVEL. SEE ENGINEERING REQUIREMENTS FOR THE CONTRACTOR IN THE GENERAL NOTES.

PLAN NORTH

US Army Corps of Engineers ®

MARK	DESCRIPTION	DATE

ISSUE DATE:
AUGUST 29, 2025

SOLICITATION NO.:
W912DS23F0031

CONTRACT NO.:
W912DS18D0007

DESIGNED BY: CRH
DRAWN BY: CRH
CHECKED BY: ELL
SUBMITTED BY: CRH
SIZE: ANSI D

US ARMY CORPS OF ENGINEERS
NEW YORK DISTRICT
26 FEDERAL PLAZA, NEW YORK, NY 10278

CHILD DEVELOPMENT CENTER
USAG FORT HAMILTON, NEW YORK
PROJECT NO. 75662

T.O. WALL FRAMING PLAN

SHEET ID

S-102

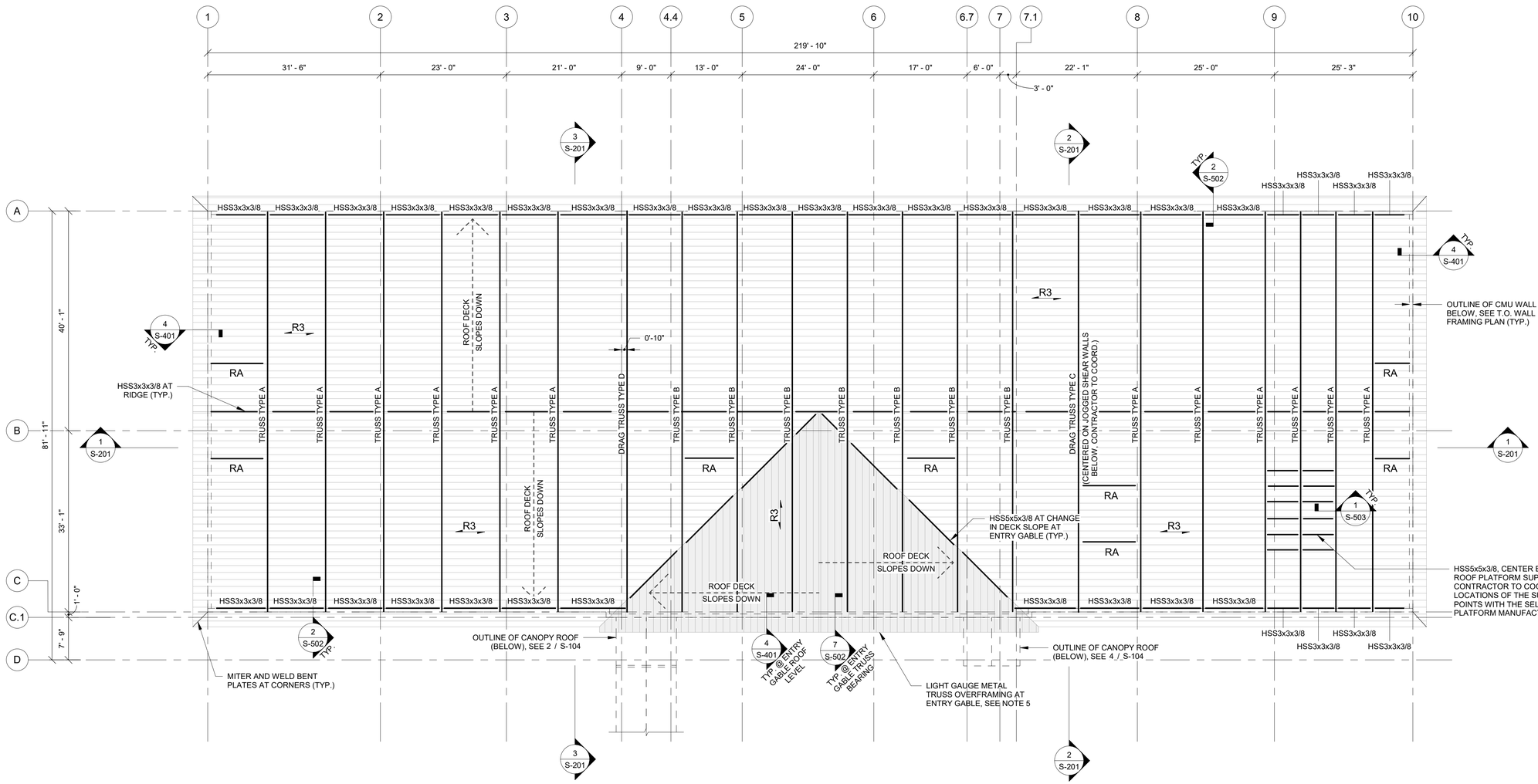

1 ROOF FRAMING PLAN

3/32" = 1'-0"

NOTES:

1. ALL ELEVATIONS SHOWN ARE REFERENCED RELATIVE TO THE TOP OF FIRST FLOOR SLAB. REFER TO CIVIL DRAWINGS FOR ELEVATION OF BUILDING RELATIVE TO GLOBAL DATUMS.
2. R3 - INDICATES SPAN DIRECTION OF 3" 18 GA. (TYPE N) GALV. METAL ROOF DECK
3. - INDICATES A MOMENT CONNECTION
4. COORDINATE ALL ROOF SLOPES, ELEVATIONS, AND EDGE OF DECK DIMENSIONS w/ ARCH. DWGS.
5. THE LIGHT GAUGE METAL TRUSS OVERFRAMING SHOWN ON THESE DRAWINGS ARE A DELEGATED DESIGN. THE LIGHT GAUGE MANUFACTURER WILL DESIGN AND DETAIL THE ROOF OVERFRAMING SYSTEM IN ACCORDANCE WITH IBC, AISI, AND THE REQUIREMENTS SHOWN ON THESE DRAWINGS. THE DESIGN MUST INCLUDE ALL DETAILS REQUIRED FOR THE ROOF SYSTEM, INCLUDING STABILITY BRACING & BRIDGING, PIGGYBACK FRAMING, OVERHANGS, AND CONNECTIONS TO OTHER FRAMING MEMBERS AND SUPPORTS. THE ROOF OVERFRAMING SYSTEM DESIGN MUST BE PERFORMED BY A LICENSED PROFESSIONAL ENGINEER AND SUBMITTED FOR REVIEW AND APPROVAL PRIOR TO FABRICATION.
6. TRUSS TYPE # - ROOF TRUSS TYPE, SEE TRUSS ELEVATIONS. DRAG TRUSS TYPES MUST BE ALIGNED WITH A STEEL BEAM BELOW, SEE DETAIL CUT ON T.O. WALL FRAMING PLAN.
7. RA - HSS5x5x3/8 AT ROOF FALL PROTECTION ANCHORS, SEE ARCH DRAWINGS FOR EXACT LOCATIONS OF ANCHORS
8. PROVIDE CONT. BENT PLATES AT TOP AND BOTTOM OF ROOF DECK AT ALL CHANGES IN ROOF DECK SLOPE, SEE TYPICAL DETAILS.
9. ROOF PENETRATIONS ARE NOT SHOWN ON THIS PLAN. ALL OPENINGS AND PENETRATIONS IN THE ROOF DECK WILL REQUIRE ADDITIONAL STEEL FRAMING. CONTRACTOR TO COORD. ALL REQUIRED PENETRATIONS w/ THE MEP DRAWINGS. SEE TYPICAL DETAILS FOR FRAMING AROUND SLAB AND ROOF DECK PENETRATIONS.
10. SUPPORT OF MEP WILL BE PROVIDED BY THE CONTRACTOR. PROVIDE A LIGHT GAUGE SYSTEM SUSPENDED FROM EITHER THE TRUSS BOTTOM CHORDS OR THE STEEL FRAMING AT THE T.O. WALL FRAMING LEVEL.

PLAN NORTH

US Army Corps of Engineers ®

MARK	DESCRIPTION	DATE

DESIGNED BY: CRH	ISSUE DATE: AUGUST 29, 2025
DRAWN BY: CRH	SOLICITATION NO.: W912DS24F0031
CHECKED BY: BLF	CONTRACT NO.: W912DS15D0007
SUBMITTED BY: CRH	SIZE: ANSI D

US ARMY CORPS OF ENGINEERS
NEW YORK DISTRICT
26 FEDERAL PLAZA, NEW YORK, NY 10278

CHILD DEVELOPMENT CENTER
USAG FORT HAMILTON, NEW YORK
PROJECT NO. 75662

ROOF FRAMING PLAN

SHEET ID

S-103

NOTES:
1. SEE SHEETS S-101 THROUGH S-103 FOR PLAN NOTES.
2. SEE SHEETS S-101 THROUGH S-103 FOR INFORMATION NOT SHOWN IN THESE PLANS.
3. ALL STEEL AT THE CANOPIES MUST BE HOT-DIP GALVANIZED. THIS INCLUDES BUT IS NOT LIMITED TO: BEAMS, COLUMNS, ANGLES, PLATES, BOLTS, AND NUTS.

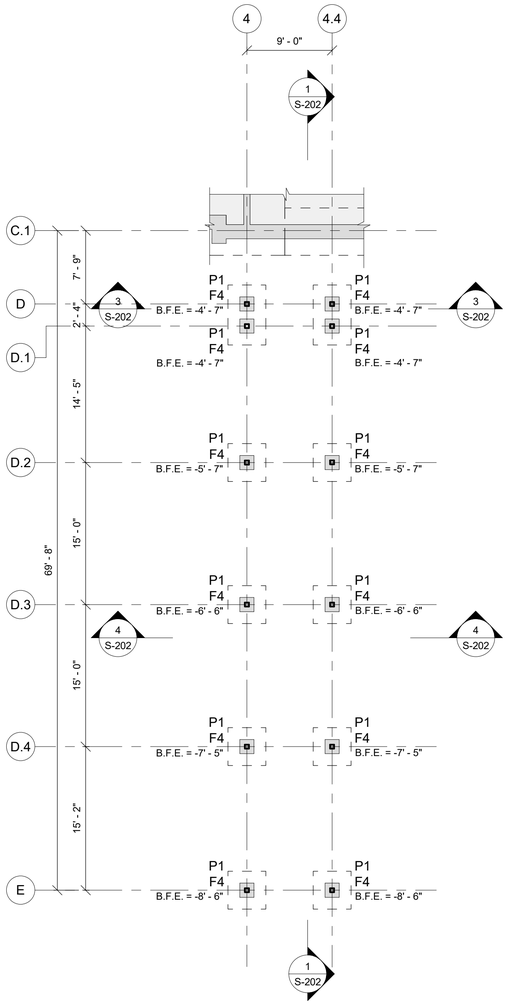

MAIN ENTRANCE CANOPY FOUNDATION PLAN

1 — 1/8" = 1'-0"

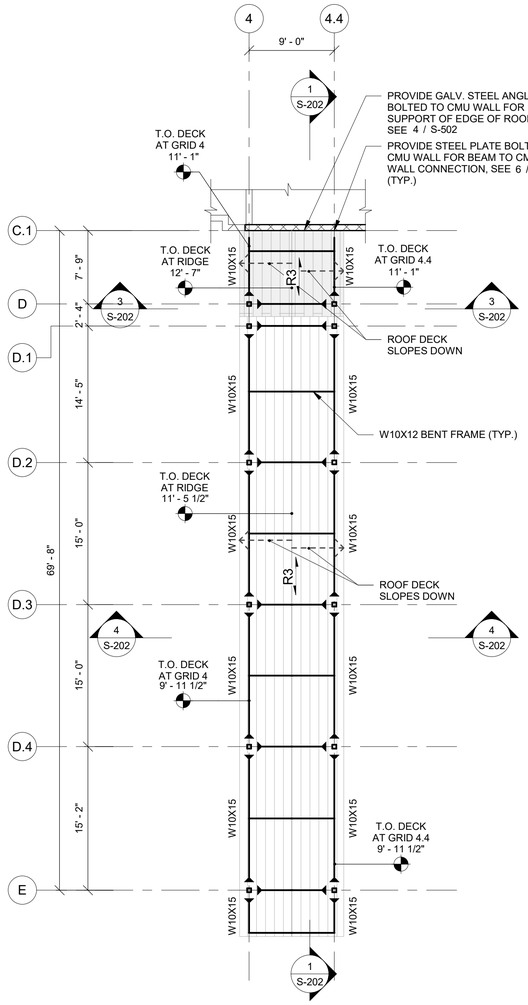

MAIN ENTRANCE CANOPY ROOF FRAMING PLAN

2 — 1/8" = 1'-0"

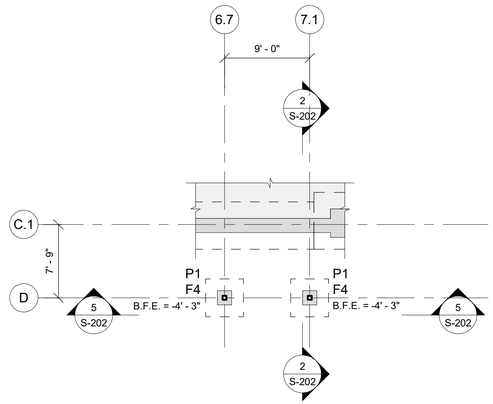

ACTIVE PLAYROOM ENTRY CANOPY FOUNDATION PLAN

3 — 1/8" = 1'-0"

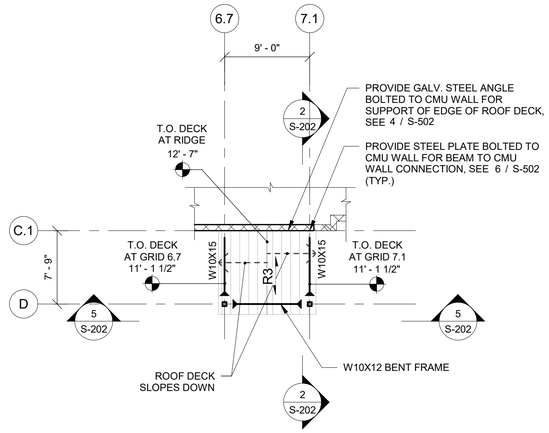

ACTIVE PLAYROOM ENTRY CANOPY ROOF FRAMING PLAN

4 — 1/8" = 1'-0"

PLAN NORTH

US Army Corps of Engineers ®

MARK	DESCRIPTION	DATE

ISSUE DATE: AUGUST 29, 2025
SOLICITATION NO.: W912DS23F0031
CONTRACT NO.: W912DS15BD007

DESIGNED BY: MXC
DRAWN BY: MXC
CHECKED BY: CRH
SUBMITTED BY: CRH
SIZE: ANSI D

US ARMY CORPS OF ENGINEERS
NEW YORK DISTRICT
26 FEDERAL PLAZA, NEW YORK, NY 10278

CHILD DEVELOPMENT CENTER
USAG FORT HAMILTON, NEW YORK
PROJECT NO. 75662

CANOPY FRAMING PLANS

SHEET ID

S-104

NOTE:
DO NOT SCALE FROM THIS SHEET.

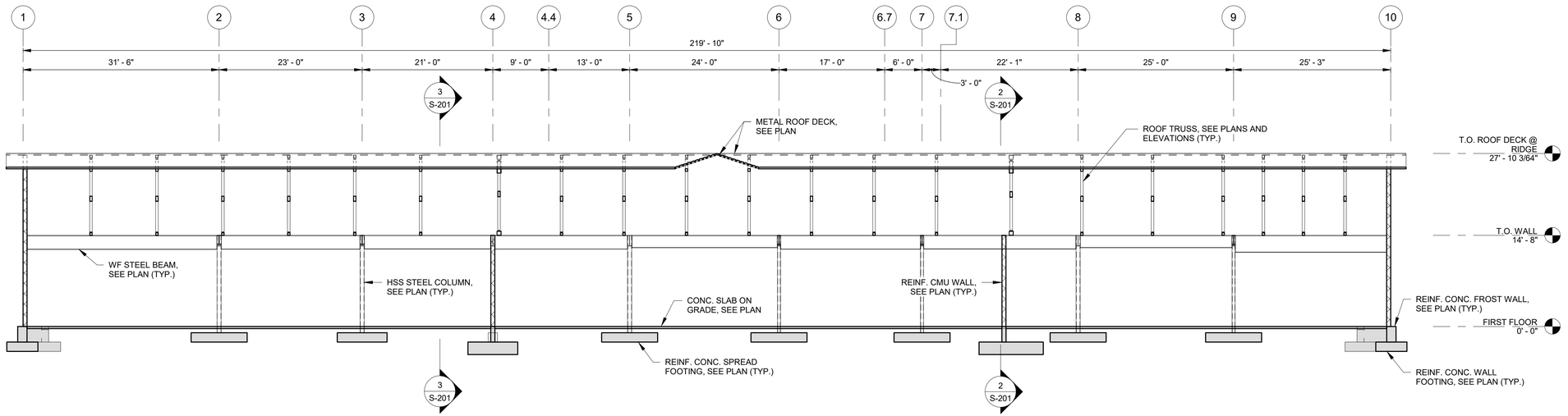

1 BUILDING SECTION
1" = 10'-0"

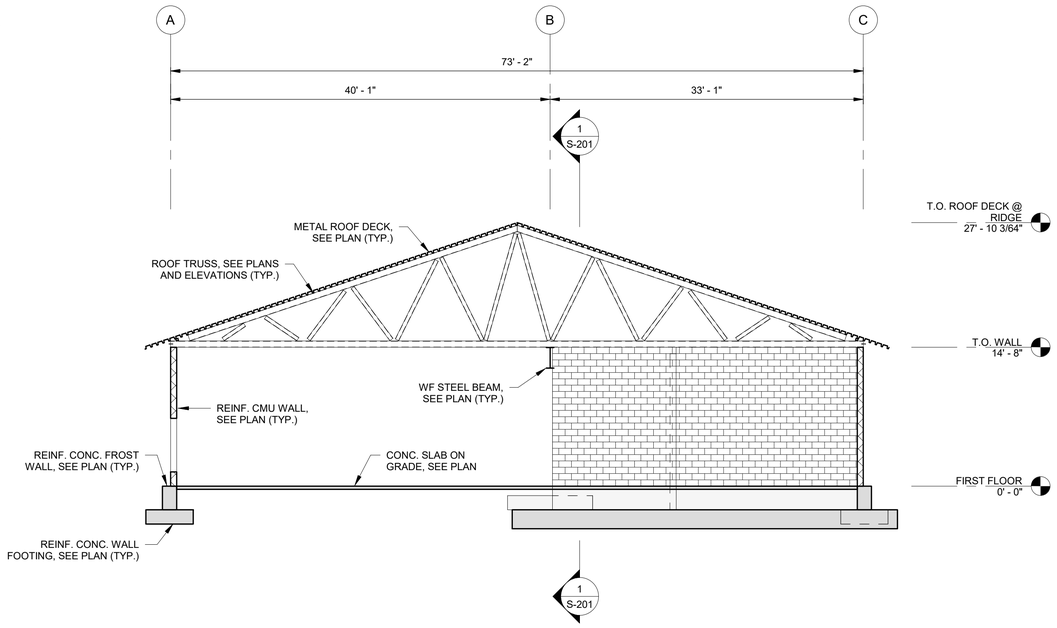

2 BUILDING SECTION
1/8" = 1'-0"

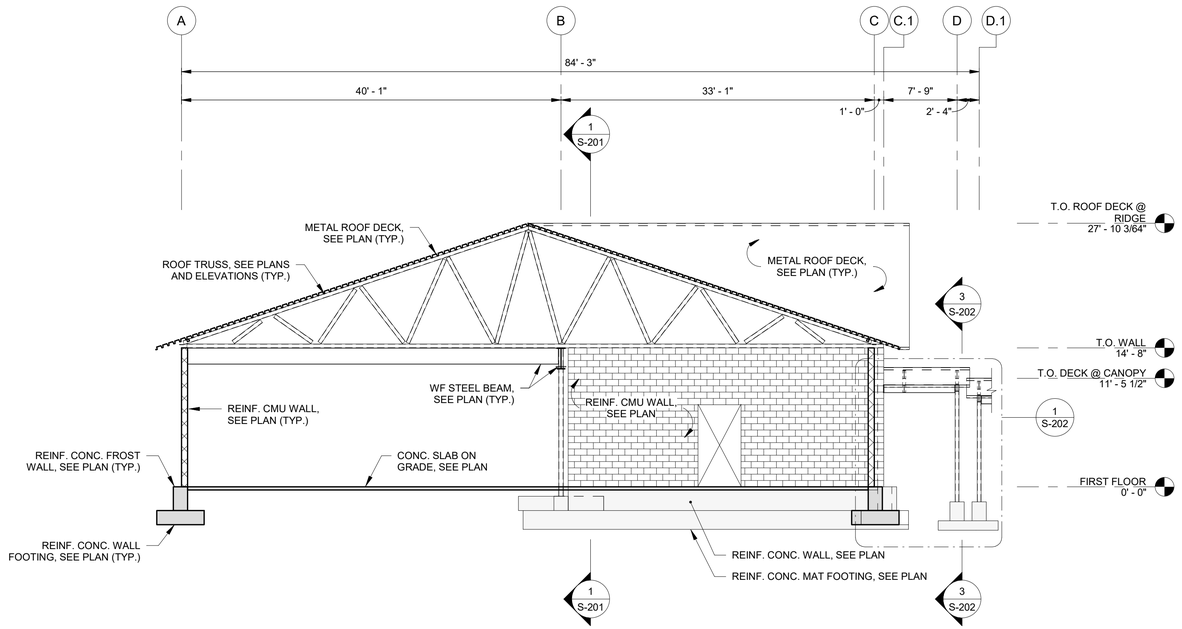

3 BUILDING SECTION
1/8" = 1'-0"

US Army Corps of Engineers ®

MARK	DESCRIPTION	DATE

ISSUE DATE:
AUGUST 29, 2025

SOLICITATION NO.:
W912DS24F0031

CONTRACT NO.:
W912DS19D0007

DESIGNED BY:
CRH

DRAWN BY:
CRH

CHECKED BY:
P.E.

SUBMITTED BY:
CRH

SIZE:
ANSI D

US ARMY CORPS OF ENGINEERS
NEW YORK DISTRICT
26 FEDERAL PLAZA, NEW YORK, NY 10278

CHILD DEVELOPMENT CENTER
USAG FORT HAMILTON, NEW YORK
PROJECT NO. 75662

BUILDING SECTIONS

SHEET ID

S-201

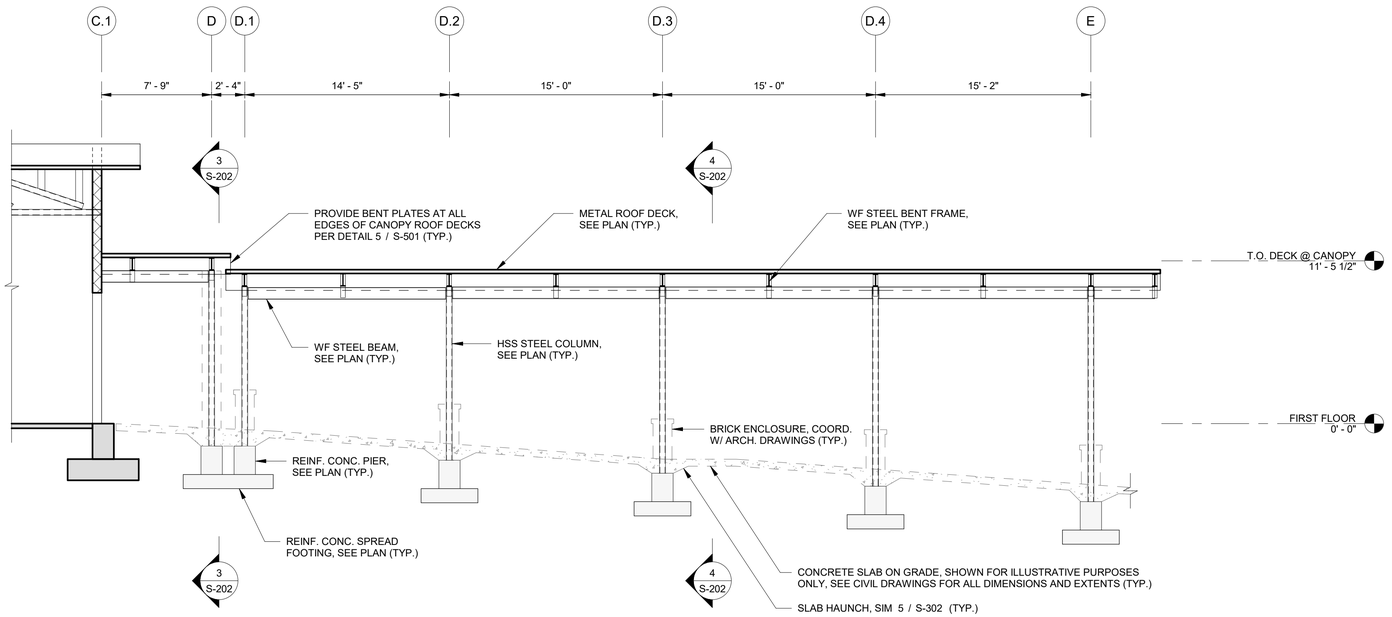

1 MAIN ENTRANCE CANOPY SECTION

3/16" = 1'-0"

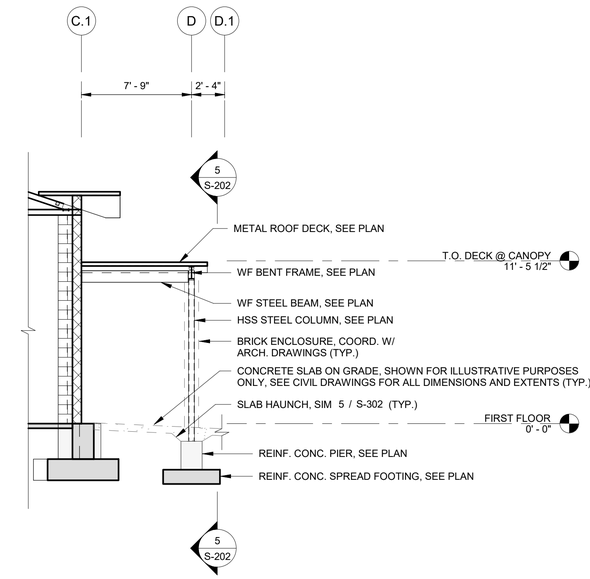

2 ACTIVE PLAYROOM ENTRY CANOPY SECTION

3/16" = 1'-0"

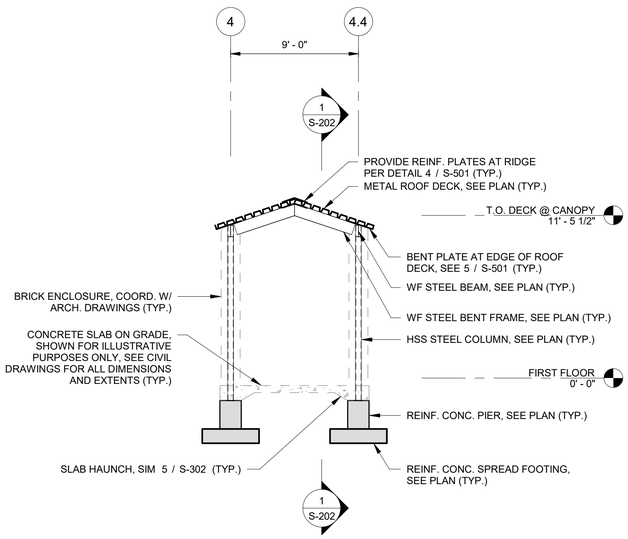

3 ATTACHED MAIN ENTRANCE CANOPY SECTION

3/16" = 1'-0"

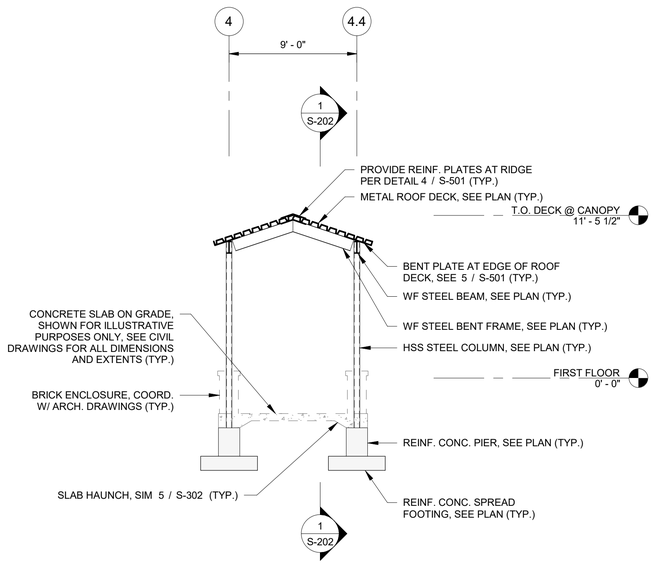

4 DETACHED MAIN ENTRANCE CANOPY SECTION

3/16" = 1'-0"

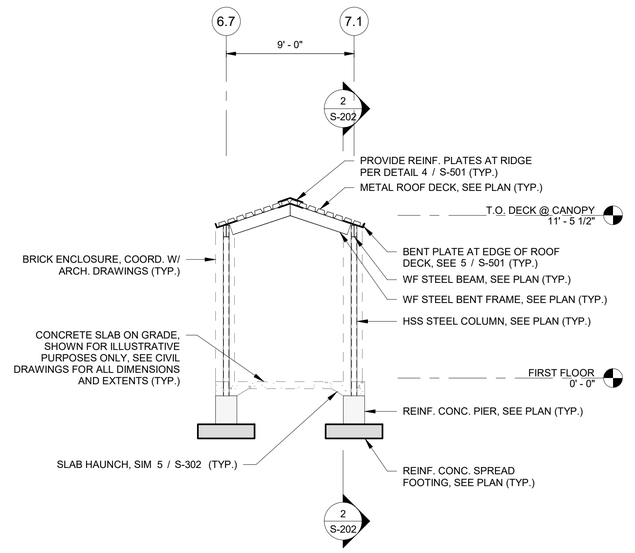

5 ACTIVE PLAYROOM ENTRY CANOPY SECTION

3/16" = 1'-0"

US Army Corps of Engineers ®

MARK	DESCRIPTION	DATE

ISSUE DATE: AUGUST 29, 2025
SOLICITATION NO.: W912DS23F0031
CONTRACT NO.: W912DS15D0007

DESIGNED BY: MXC
DRAWN BY: MXC
CHECKED BY: BLP
SUBMITTED BY: CRH
SIZE: ANSI D

US ARMY CORPS OF ENGINEERS
NEW YORK DISTRICT
26 FEDERAL PLAZA, NEW YORK, NY 10278

CHILD DEVELOPMENT CENTER
USAG FORT HAMILTON, NEW YORK
PROJECT NO. 75662

CANOPY SECTIONS

SHEET ID

S-202

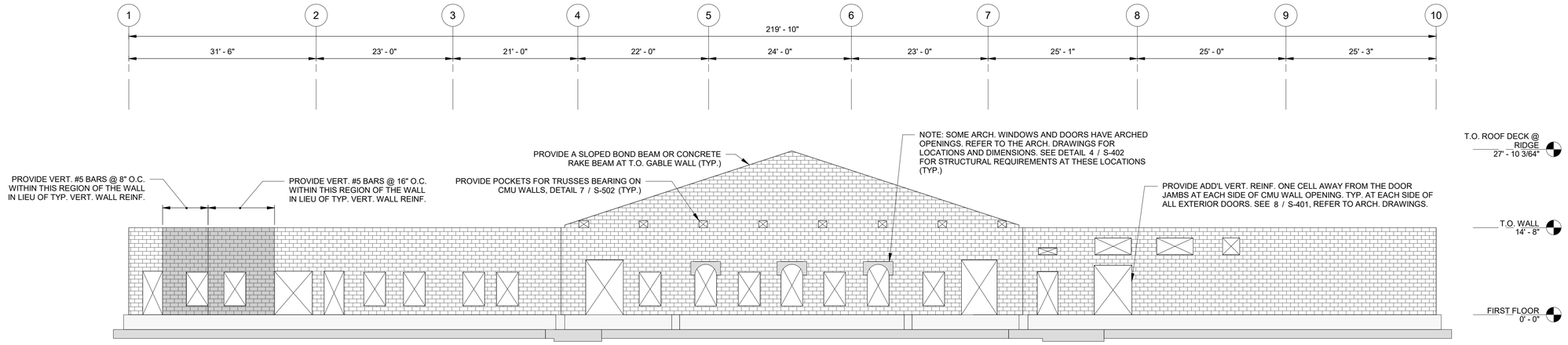

1 GRID C WALL

1" = 10'-0"

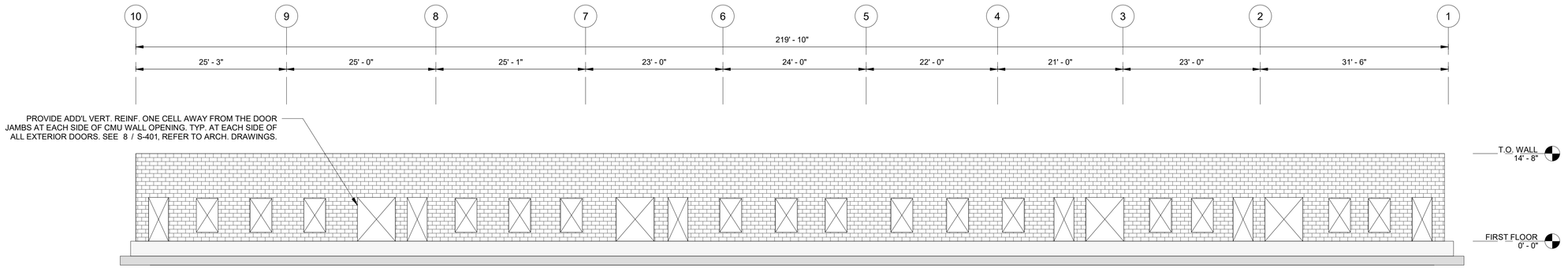

2 GRID A WALL

1" = 10'-0"

NOTES:

1. THESE SHEAR WALL ELEVATIONS ARE INTENDED TO REPRESENT THE ANTICIPATED OPENINGS IN THE CMU SHEAR WALLS SHOWN AND ADDITIONAL REINFORCEMENT REQUIREMENTS NOT SHOWN ELSEWHERE ON THE DRAWINGS. NON-STRUCTURAL CMU WALLS ARE NOT SHOWN ON THESE DRAWINGS. TYPICAL WALL REINFORCEMENT IS NOT SHOWN ABOVE FOR CLARITY. SEE CMU WALL SCHEDULE ON S-005. REINFORCEMENT SHOWN IN OTHER DETAILS, INCLUDING TYPICAL DETAILS, MUST BE PROVIDED.
2. THE WALLS SHOWN ON THESE ELEVATIONS ARE DESIGNED AS INTERMEDIATE MASONRY SHEAR WALLS.
3. OPENINGS AND PENETRATIONS SHOWN ON THESE SHEAR WALL ELEVATIONS ARE FOR REFERENCE ONLY. FOR EXACT SIZES AND LOCATIONS, COORDINATE WITH THE ARCHITECTURAL AND MEP DRAWINGS. THE OPENINGS SHOWN ON THESE DRAWINGS REPRESENT OPENINGS THAT WERE COORDINATED DURING DESIGN AND ARE ACCEPTABLE STRUCTURALLY.
4. CMU WALLS MAY NOT BE PENETRATED WITHOUT THE EXPRESS WRITTEN APPROVAL OF USACE STRUCTURAL ENGINEER. OPENINGS AND/OR PENETRATIONS SHOWN ON THESE SHEAR WALL ELEVATIONS ARE APPROVED. ALL OTHER OPENINGS AND/OR PENETRATIONS ARE NOT APPROVED. IF ADDITIONAL OPENINGS AND/OR PENETRATIONS ARE REQUIRED, SUBMIT PROPOSED LOCATIONS AND SIZES FOR REVIEW AND APPROVAL AS DESCRIBED BELOW.
5. CONTRACTOR TO COORDINATE ALL REQUIRED PENETRATIONS WITH THE ARCHITECTURAL AND MEP DRAWINGS PRIOR TO WALL CONSTRUCTION, AND SUBMIT COORDINATION DRAWINGS FOR REVIEW AND APPROVAL. THE SUBMITTED COORDINATION DRAWINGS MUST INCLUDE THE SIZE AND LOCATION OF ALL PENETRATIONS/OPENINGS.
6. ALL WALL PENETRATIONS MUST BE SHOWN ON THE REBAR SHOP DRAWINGS. SHEAR WALL PENETRATIONS THAT ARE NOT SHOWN ON THE APPROVED REBAR SHOP DRAWINGS ARE NOT PERMITTED.
7. DETAILS FOR SUPPORT OF BRICK ABOVE OPENINGS ARE NOT SHOWN ON THESE ELEVATIONS. PROVIDE LOOSE LINTELS OR BOLTED STEEL LINTELS TO SUPPORT THE BRICK ABOVE ALL OPENINGS IN ACCORDANCE WITH THE TYPICAL DETAILS.

US Army Corps of Engineers ®

MARK	DESCRIPTION	DATE

ISSUE DATE: AUGUST 29, 2025
SOLICITATION NO.: W912DS23F0031
CONTRACT NO.: W912DS18D0007

DESIGNED BY: CRH
DRAWN BY: MXC
CHECKED BY: CRH
SUBMITTED BY: CRH
SIZE: ANSI D

US ARMY CORPS OF ENGINEERS
NEW YORK DISTRICT
26 FEDERAL PLAZA, NEW YORK, NY 10278

CHILD DEVELOPMENT CENTER
USAG FORT HAMILTON, NEW YORK
PROJECT NO. 75662

SHEAR WALL ELEVATIONS

SHEET ID

S-203

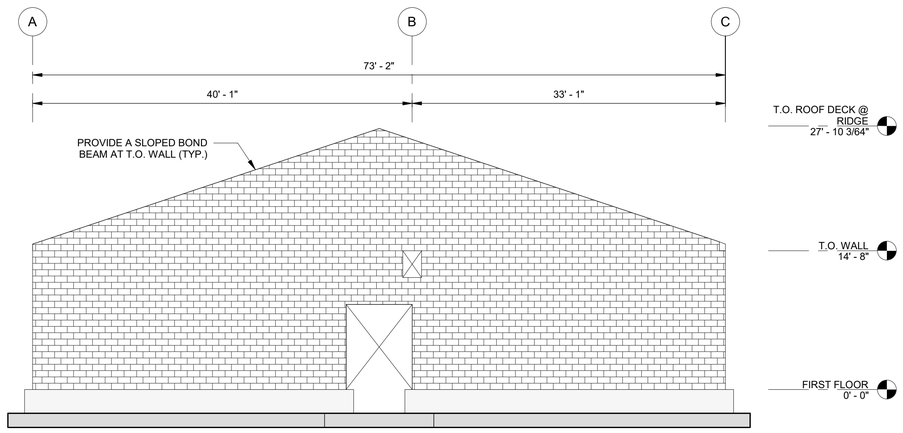

1 GRID 1 WALL

1/8" = 1'-0"

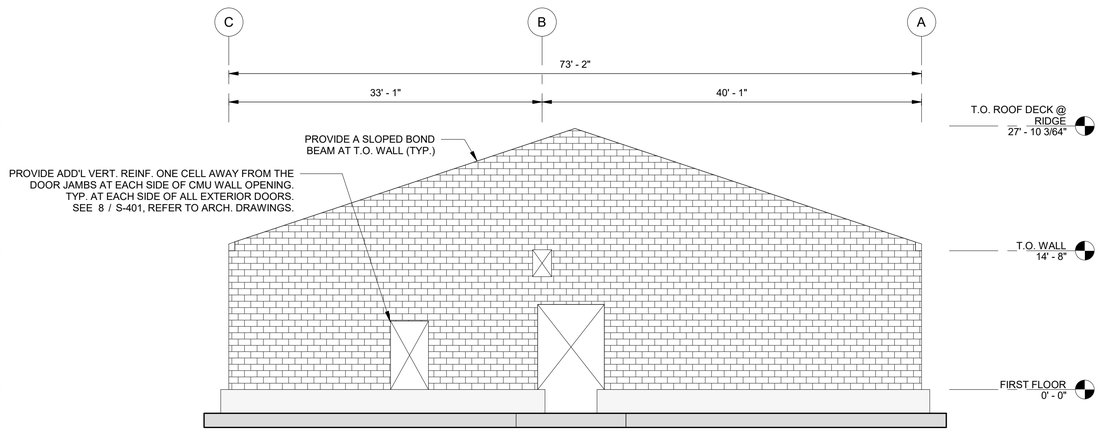

2 GRID 10 WALL

1/8" = 1'-0"

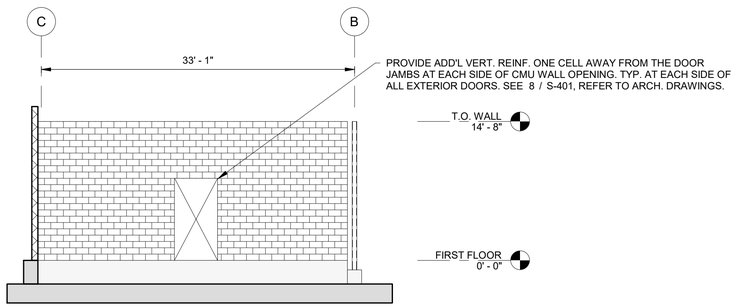

3 GRID 4 WALL

1/8" = 1'-0"

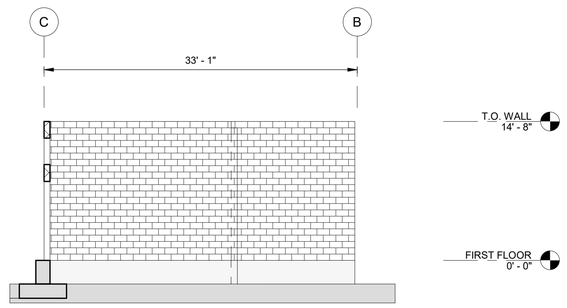

4 WALL BETWEEN GRIDS 7 AND 8

1/8" = 1'-0"

NOTES:

1. THESE SHEAR WALL ELEVATIONS ARE INTENDED TO REPRESENT THE ANTICIPATED OPENINGS IN THE CMU SHEAR WALLS SHOWN AND ADDITIONAL REINFORCEMENT REQUIREMENTS NOT SHOWN ELSEWHERE ON THE DRAWINGS. NON-STRUCTURAL CMU WALLS ARE NOT SHOWN ON THESE DRAWINGS. TYPICAL WALL REINFORCEMENT IS NOT SHOWN ABOVE FOR CLARITY. SEE CMU WALL SCHEDULE ON S-005. REINFORCEMENT SHOWN IN OTHER DETAILS, INCLUDING TYPICAL DETAILS, MUST BE PROVIDED.
2. THE WALLS SHOWN ON THESE ELEVATIONS ARE DESIGNED AS INTERMEDIATE MASONRY SHEAR WALLS.
3. OPENINGS AND PENETRATIONS SHOWN ON THESE SHEAR WALL ELEVATIONS ARE FOR REFERENCE ONLY. FOR EXACT SIZES AND LOCATIONS, COORDINATE WITH THE ARCHITECTURAL AND MEP DRAWINGS. THE OPENINGS SHOWN ON THESE DRAWINGS REPRESENT OPENINGS THAT WERE COORDINATED DURING DESIGN AND ARE ACCEPTABLE STRUCTURALLY.
4. CMU WALLS MAY NOT BE PENETRATED WITHOUT THE EXPRESS WRITTEN APPROVAL OF USACE STRUCTURAL ENGINEER. OPENINGS AND/OR PENETRATIONS SHOWN ON THESE SHEAR WALL ELEVATIONS ARE APPROVED. ALL OTHER OPENINGS AND/OR PENETRATIONS ARE NOT APPROVED. IF ADDITIONAL OPENINGS AND/OR PENETRATIONS ARE REQUIRED, SUBMIT PROPOSED LOCATIONS AND SIZES FOR REVIEW AND APPROVAL AS DESCRIBED BELOW.
5. CONTRACTOR TO COORDINATE ALL REQUIRED PENETRATIONS WITH THE ARCHITECTURAL AND MEP DRAWINGS PRIOR TO WALL CONSTRUCTION, AND SUBMIT COORDINATION DRAWINGS FOR REVIEW AND APPROVAL. THE SUBMITTED COORDINATION DRAWINGS MUST INCLUDE THE SIZE AND LOCATION OF ALL PENETRATIONS/OPENINGS.
6. ALL WALL PENETRATIONS MUST BE SHOWN ON THE REBAR SHOP DRAWINGS. SHEAR WALL PENETRATIONS THAT ARE NOT SHOWN ON THE APPROVED REBAR SHOP DRAWINGS ARE NOT PERMITTED.
7. DETAILS FOR SUPPORT OF BRICK ABOVE OPENINGS ARE NOT SHOWN ON THESE ELEVATIONS. PROVIDE LOOSE LINTELS OR BOLTED STEEL LINTELS TO SUPPORT THE BRICK ABOVE ALL OPENINGS IN ACCORDANCE WITH THE TYPICAL DETAILS.

US Army Corps of Engineers ®

MARK	DESCRIPTION	DATE

ISSUE DATE: AUGUST 29, 2025
SOLICITATION NO.: W912DS23F0031
CONTRACT NO.: W912DS18D0007

DESIGNED BY: CRH
DRAWN BY: MXC
CHECKED BY: RLD
SUBMITTED BY: CRH
SIZE: ANSI D

US ARMY CORPS OF ENGINEERS
NEW YORK DISTRICT
26 FEDERAL PLAZA, NEW YORK, NY 10278

CHILD DEVELOPMENT CENTER
USAG FORT HAMILTON, NEW YORK
PROJECT NO. 75662

SHEAR WALL ELEVATIONS

SHEET ID

S-204

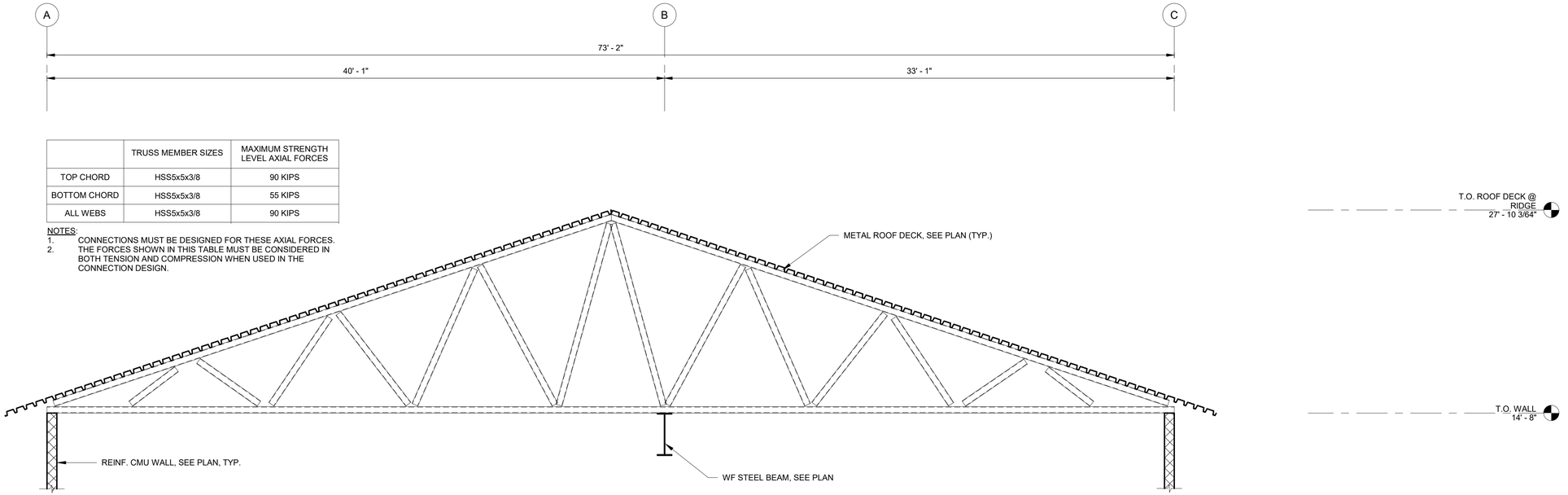

	TRUSS MEMBER SIZES	MAXIMUM STRENGTH LEVEL AXIAL FORCES
TOP CHORD	HSS5x5x3/8	90 KIPS
BOTTOM CHORD	HSS5x5x3/8	55 KIPS
ALL WEBS	HSS5x5x3/8	90 KIPS

NOTES:
1. CONNECTIONS MUST BE DESIGNED FOR THESE AXIAL FORCES.
2. THE FORCES SHOWN IN THIS TABLE MUST BE CONSIDERED IN BOTH TENSION AND COMPRESSION WHEN USED IN THE CONNECTION DESIGN.

1 TRUSS TYPE A
1/4" = 1'-0"

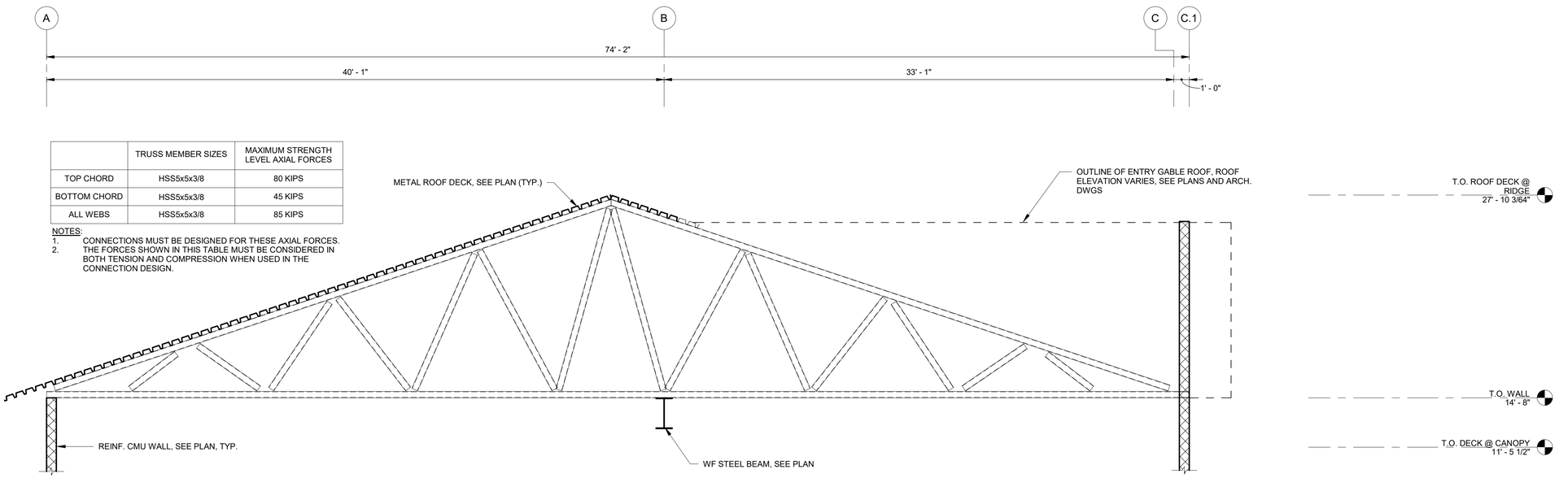

	TRUSS MEMBER SIZES	MAXIMUM STRENGTH LEVEL AXIAL FORCES
TOP CHORD	HSS5x5x3/8	80 KIPS
BOTTOM CHORD	HSS5x5x3/8	45 KIPS
ALL WEBS	HSS5x5x3/8	85 KIPS

NOTES:
1. CONNECTIONS MUST BE DESIGNED FOR THESE AXIAL FORCES.
2. THE FORCES SHOWN IN THIS TABLE MUST BE CONSIDERED IN BOTH TENSION AND COMPRESSION WHEN USED IN THE CONNECTION DESIGN.

2 TRUSS TYPE B
1/4" = 1'-0"

US Army Corps of Engineers ®

MARK	DESCRIPTION	DATE

ISSUE DATE: AUGUST 29, 2025
SOLICITATION NO.: W912DS23F0031
CONTRACT NO.: W912DS19DD007

DESIGNED BY: MXC
DRAWN BY: MXC
CHECKED BY: RLP
SUBMITTED BY: CRH
SIZE: ANSI D

US ARMY CORPS OF ENGINEERS
NEW YORK DISTRICT
26 FEDERAL PLAZA, NEW YORK, NY 10278

CHILD DEVELOPMENT CENTER
USAG FORT HAMILTON, NEW YORK
PROJECT NO. 75662

TRUSS ELEVATIONS

SHEET ID

S-205

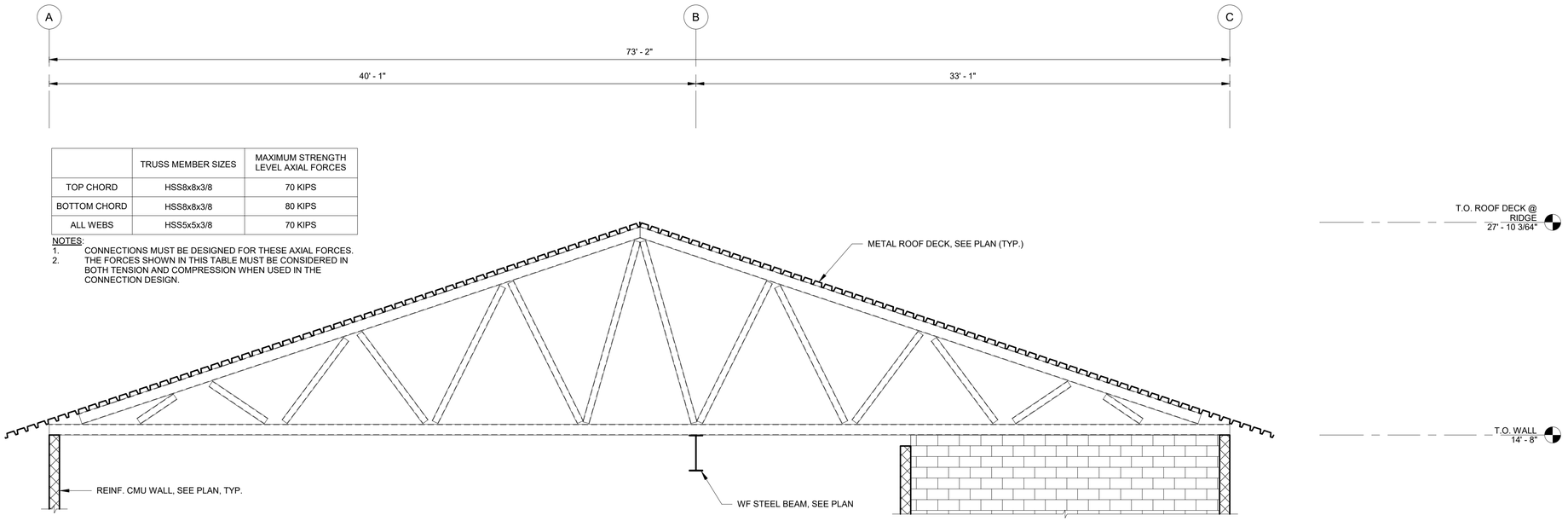

	TRUSS MEMBER SIZES	MAXIMUM STRENGTH LEVEL AXIAL FORCES
TOP CHORD	HSS8x8x3/8	70 KIPS
BOTTOM CHORD	HSS8x8x3/8	80 KIPS
ALL WEBS	HSS5x5x3/8	70 KIPS

NOTES:
1. CONNECTIONS MUST BE DESIGNED FOR THESE AXIAL FORCES.
2. THE FORCES SHOWN IN THIS TABLE MUST BE CONSIDERED IN BOTH TENSION AND COMPRESSION WHEN USED IN THE CONNECTION DESIGN.

1 DRAG TRUSS TYPE C

1/4" = 1'-0"

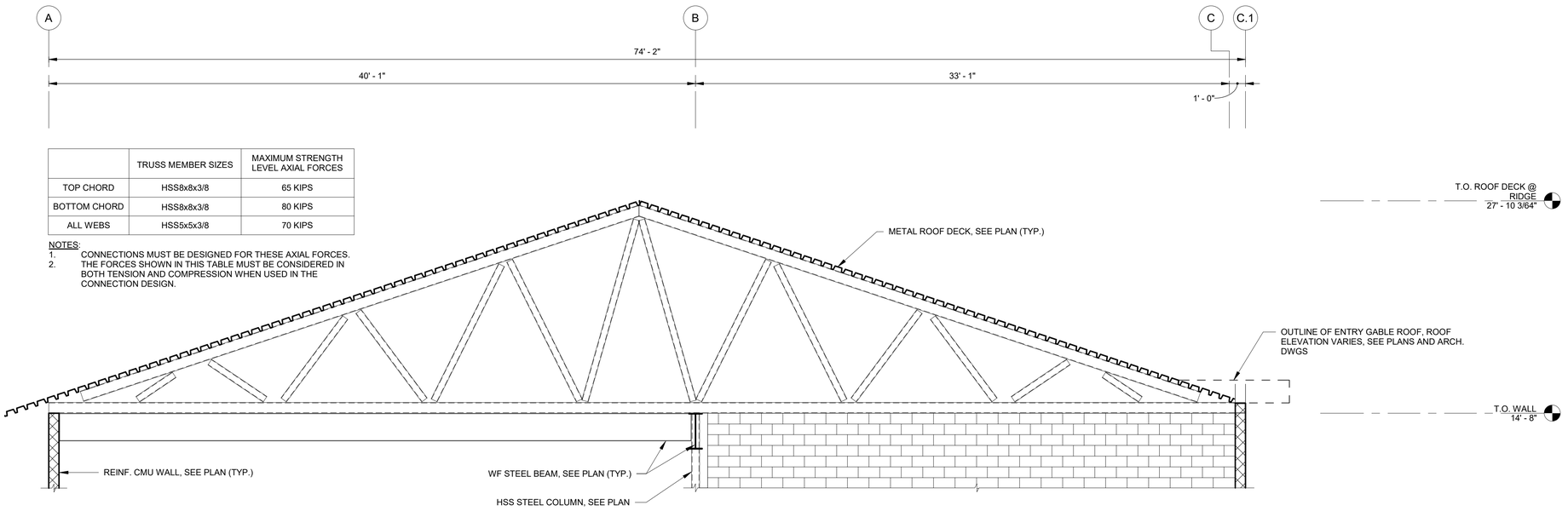

	TRUSS MEMBER SIZES	MAXIMUM STRENGTH LEVEL AXIAL FORCES
TOP CHORD	HSS8x8x3/8	65 KIPS
BOTTOM CHORD	HSS8x8x3/8	80 KIPS
ALL WEBS	HSS5x5x3/8	70 KIPS

NOTES:
1. CONNECTIONS MUST BE DESIGNED FOR THESE AXIAL FORCES.
2. THE FORCES SHOWN IN THIS TABLE MUST BE CONSIDERED IN BOTH TENSION AND COMPRESSION WHEN USED IN THE CONNECTION DESIGN.

2 DRAG TRUSS TYPE D

1/4" = 1'-0"

US Army Corps of Engineers ®

MARK	DESCRIPTION	DATE

ISSUE DATE:	AUGUST 29, 2025
SOLICITATION NO.:	W912DS24F0031
CONTRACT NO.:	W912DS19D0007
DESIGNED BY:	MXC
DRAWN BY:	MXC
CHECKED BY:	RLP
SUBMITTED BY:	CRH
SIZE:	ANSI D

US ARMY CORPS OF ENGINEERS
NEW YORK DISTRICT
26 FEDERAL PLAZA, NEW YORK, NY 10278

CHILD DEVELOPMENT CENTER
USAG FORT HAMILTON, NEW YORK
PROJECT NO. 75662

TRUSS ELEVATIONS

SHEET ID

S-206

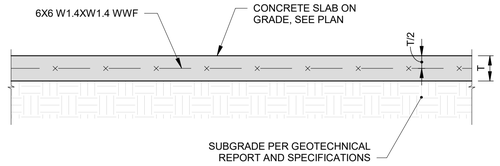

1 TYP. SLAB ON GRADE DETAIL
NTS

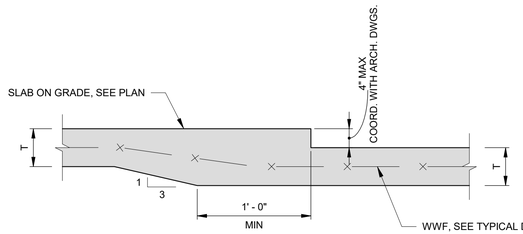

2 TYP. DEPRESSED SLAB ON GRADE DETAIL
NTS

NOTES:
1. THIS DETAIL MUST BE USED AT ALL LOCATIONS WHERE A DEPRESSED SLAB ON GRADE IS REQUIRED.
2. NOT ALL DEPRESSED SLAB ON GRADE LOCATIONS ARE SHOWN ON THE STRUCTURAL DRAWINGS. CONTRACTOR TO COORDINATE WITH THE ARCHITECTURAL DRAWINGS FOR LOCATIONS AND SIZES.
3. IF SLAB ON GRADE DEPRESSIONS GREATER THAN 2" ARE REQUIRED, CONSULT USACE STRUCTURAL ENGINEER.

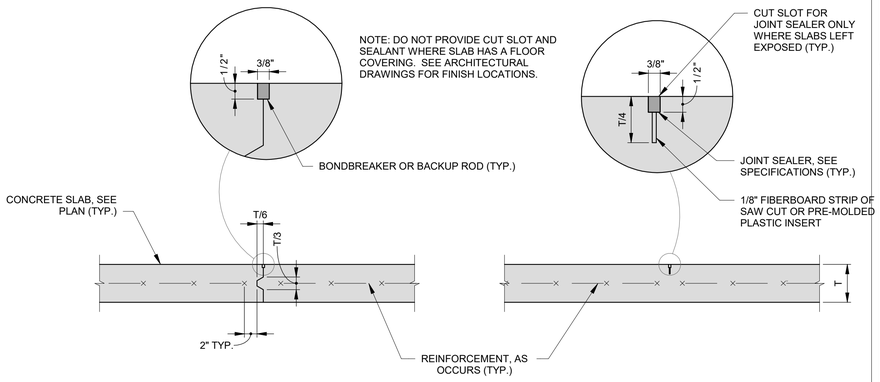

CONSTRUCTION JOINT (CJ) CONTROL JOINT (CTJ)

3 TYP. DETAIL AT SLAB JOINTS
NTS

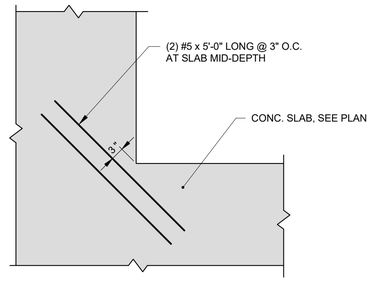

TYP. DETAIL AT SLAB
4 RE-ENTRANT CORNERS
NTS

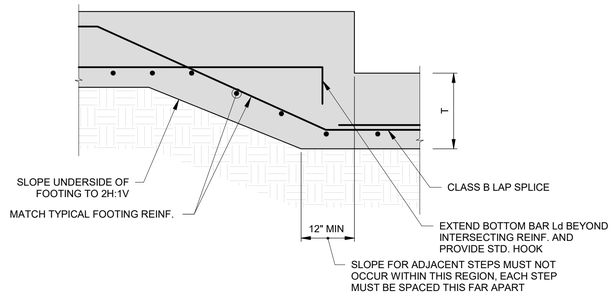

5 TYP. STEPPED FOOTING DETAIL
NTS

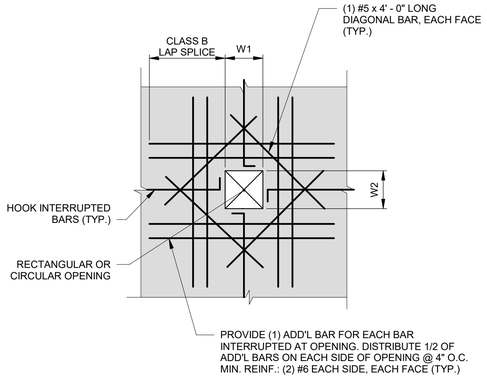

6 TYP. DETAIL AT OPENINGS IN CONCRETE SLABS AND WALLS
NTS

NOTES:
1. CONTRACTOR SHALL COORDINATE WITH DESIGN DRAWINGS BY OTHER DISCIPLINES, (ARCH., MECH., ELEC., PLUMBING AND ETC.) AND SUBMIT CONSOLIDATED SHOP DRAWINGS FOR ALL OPENINGS AND EMBEDMENT TO USACE STRUCTURAL ENGINEER FOR REVIEW PRIOR TO CONSTRUCTION.
2. THIS DETAIL APPLIES TO OPENINGS UP TO 4' - 0" SQUARE. FOR LARGER OPENINGS, CONSULT USACE STRUCTURAL ENGINEER.

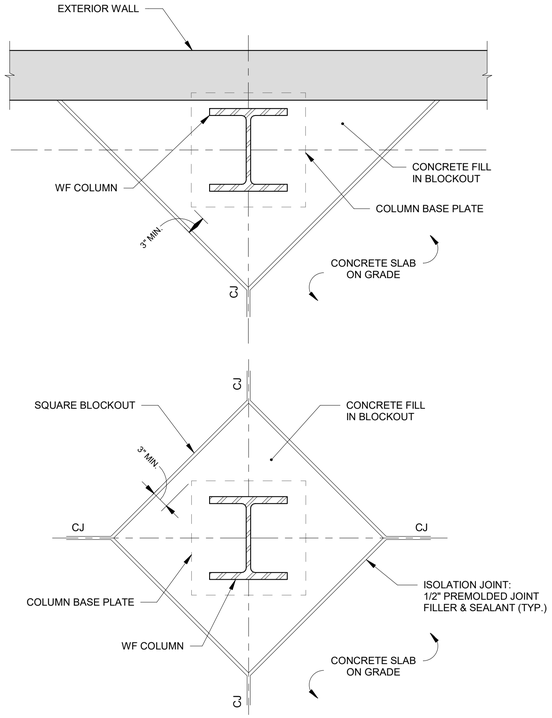

NOTE:
THIS DETAIL ALSO APPLIES AT HSS COLUMNS.

7 TYPICAL SLAB ISOLATION JOINTS AT COLUMNS
NTS

US Army Corps of Engineers ®

MARK	DESCRIPTION	DATE

ISSUE DATE: AUGUST 29, 2025
SOLICITATION NO.: W912DS23F0031
CONTRACT NO.: W912DS19BD007

DESIGNED BY: CRH
DRAWN BY: MXC
CHECKED BY: RLP
SUBMITTED BY: CRH
SIZE: ANSI D

US ARMY CORPS OF ENGINEERS
NEW YORK DISTRICT
26 FEDERAL PLAZA, NEW YORK, NY 10278

CHILD DEVELOPMENT CENTER
USAG FORT HAMILTON, NEW YORK
PROJECT NO. 75662

TYPICAL FOUNDATION DETAILS

SHEET ID
S-301

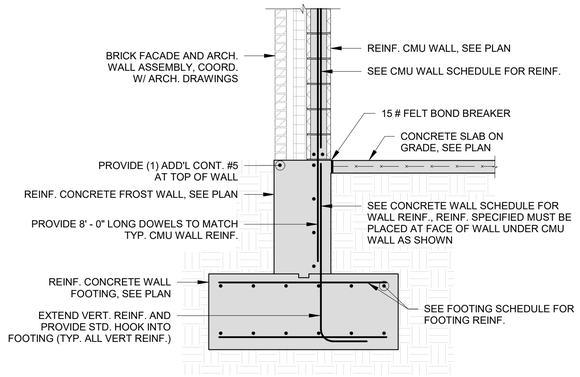

1 TYP. CONCRETE FROST WALL DETAIL AT CMU WALLS

1/2" = 1'-0"

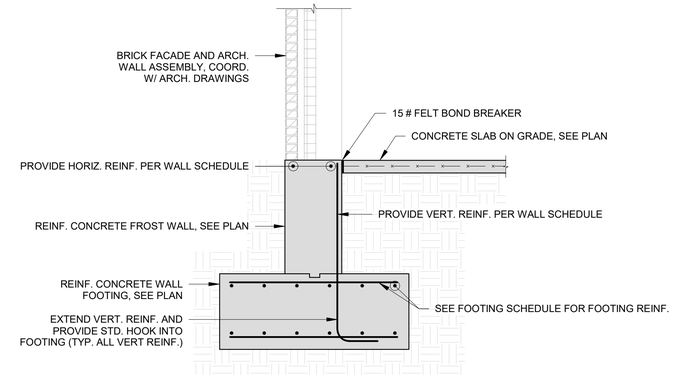

2 TYP. CONCRETE FROST WALL DETAIL AT NON-CMU WALLS

1/2" = 1'-0"

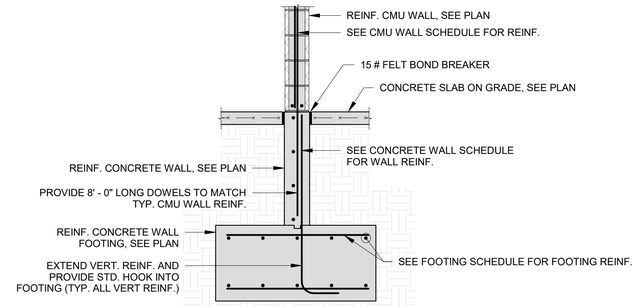

3 TYP. DETAIL AT INTERIOR CMU WALLS SUPPORTED BY CONCRETE WALLS

NTS

NOTE:
ALL LAP SPLICES MUST BE FULL TENSION LAP SPLICES.

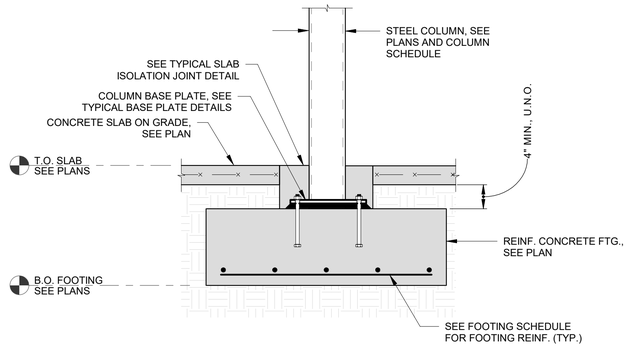

4 TYP. DETAIL AT INTERIOR SPREAD FOOTING

NTS

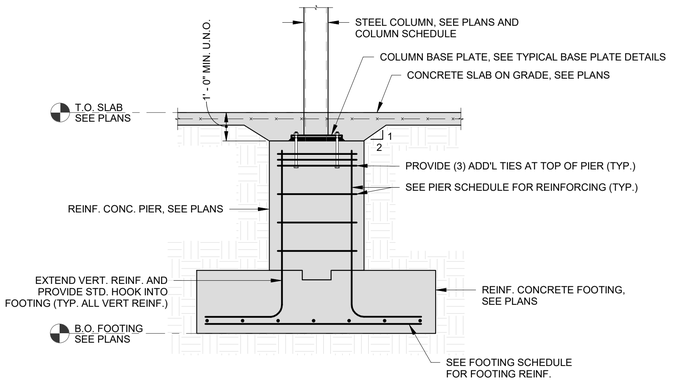

5 TYP. DETAIL AT COLUMN SUPPORTED BY PIER

1/2" = 1'-0"

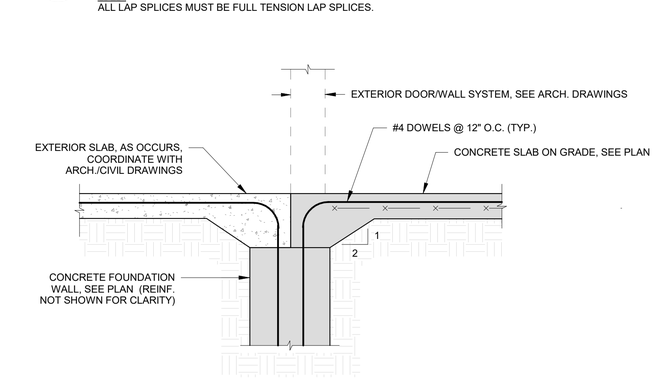

6 TYP. SLAB ON GRADE DETAIL AT EXTERIOR DOORS

NTS

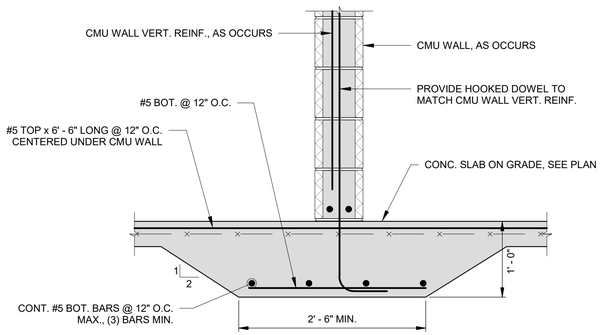

7 TYP. DETAIL AT INTERIOR CMU WALLS SUPPORTED BY SLAB ON GRADE

NTS

NOTES:
1. THIS DETAIL MUST BE USED AT ALL CMU WALLS THAT ARE SUPPORTED BY THE CONCRETE SLAB ON GRADE.
2. ALL CMU WALLS MAY NOT BE SHOWN ON THE STRUCTURAL PLANS. CONTRACTOR MUST COORDINATE WITH THE ARCHITECTURAL DRAWINGS TO DETERMINE THE LOCATIONS OF CMU WALLS THAT REQUIRE THIS DETAIL.
3. THICKENED SLAB LOCATIONS ARE NOT ALL SHOWN ON THE STRUCTURAL DRAWINGS, SEE NOTE 2.
4. ALL LAP SPLICES MUST BE FULL TENSION LAP SPLICES.

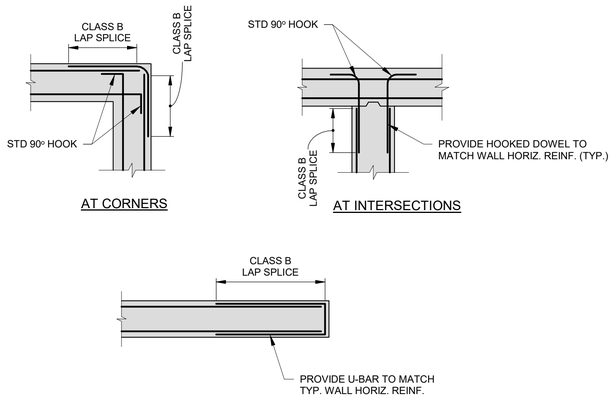

8 TYP. CONCRETE WALL PLAN DETAILS

NTS

NOTES:
1. VERTICAL REINFORCEMENT NOT SHOWN FOR CLARITY.
2. SEE PLANS FOR CONCRETE WALL LOCATIONS AND FOR MORE INFORMATION ON REINFORCEMENT SIZES.
3. WHERE SIZES OF BARS DIFFER, MATCH THE LARGER BAR.

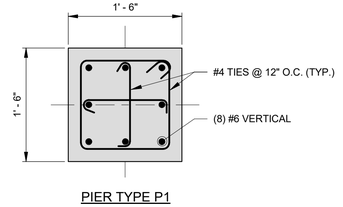

9 CONCRETE PIER DETAILS

1" = 1'-0"

US Army Corps of Engineers ®

MARK	DESCRIPTION	DATE

ISSUE DATE: AUGUST 29, 2025
SOLICITATION NO.: W912DS23F0031
CONTRACT NO.: W912DS19D0007

DESIGNED BY: CRH
DRAWN BY: MXC
CHECKED BY: BHL
SUBMITTED BY: CRH
SIZE: ANSI D

US ARMY CORPS OF ENGINEERS
NEW YORK DISTRICT
26 FEDERAL PLAZA, NEW YORK, NY 10278

CHILD DEVELOPMENT CENTER
USAG FORT HAMILTON, NEW YORK
PROJECT NO. 75662

TYPICAL FOUNDATION DETAILS

SHEET ID

S-302

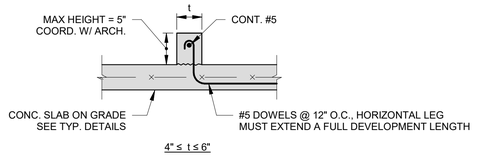

1 TYPICAL CONCRETE CURB DETAIL

NTS

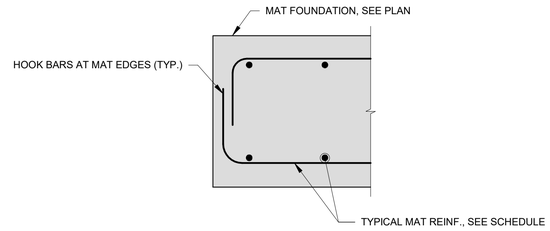

2 HOOKED REINF. AT EDGE OF MAT FOUNDATIONS

NTS

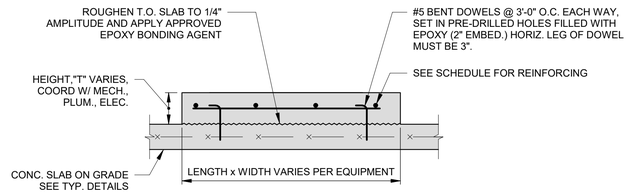

"T"	REINFORCEMENT
<4"	6x6-W2.9xW2.9 W.W.F.
4"-12"	#5 @ 18" E.W.
>12"	#5 @ 12" E.W.

3 TYPICAL INDOOR EQUIPMENT PAD DETAIL

NTS

NOTES:
1. DIMENSIONS OF EQUIPMENT PADS MUST BE APPROVED BY THE MECHANICAL, PLUMBING, OR ELECTRICAL ENGINEER.
2. REINFORCEMENT OF THE EQUIPMENT PADS MUST BE INCLUDED IN THE REBAR SHOP DRAWINGS AND APPROVED BY THE STRUCTURAL ENGINEER.
2. COORDINATE WITH MECH., PLUM., ELEC. DRAWINGS FOR EXACT LOCATIONS OF EQUIPMENT PADS AND OTHER REQUIREMENTS.

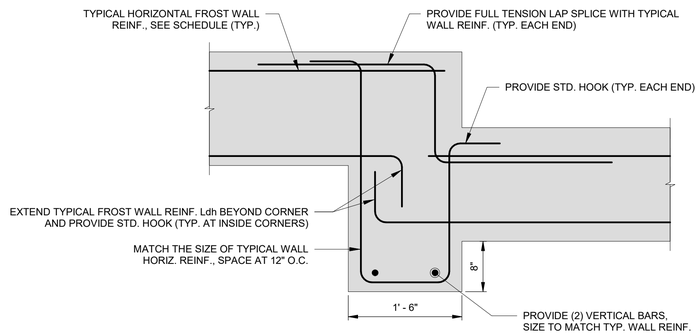

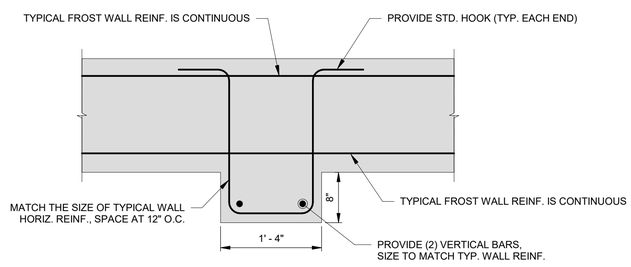

4 TYPICAL DETAIL FOR BRICK PILASTER SUPPORT AT CONCRETE FROST WALL

NTS

NOTES:
1. NOT ALL REQUIRED VERTICAL REINFORCEMENT IS SHOWN FOR CLARITY.

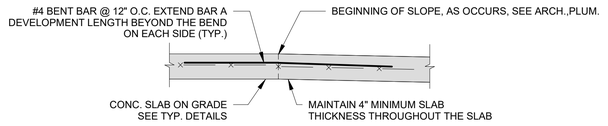

5 TYPICAL SLOPED SLAB DETAIL

1" = 1'-0"

US Army Corps of Engineers ®

MARK	DESCRIPTION	DATE

ISSUE DATE: AUGUST 29, 2025
SOLICITATION NO.: W912DS24F0031
CONTRACT NO.: W912DS19BD007

DESIGNED BY: CRH
DRAWN BY: MXC
CHECKED BY: CRH
SUBMITTED BY: CRH
SIZE: ANSI D

US ARMY CORPS OF ENGINEERS
NEW YORK DISTRICT
26 FEDERAL PLAZA, NEW YORK, NY 10278

CHILD DEVELOPMENT CENTER
USAG FORT HAMILTON, NEW YORK
PROJECT NO. 75662

FOUNDATION DETAILS

SHEET ID

S-303

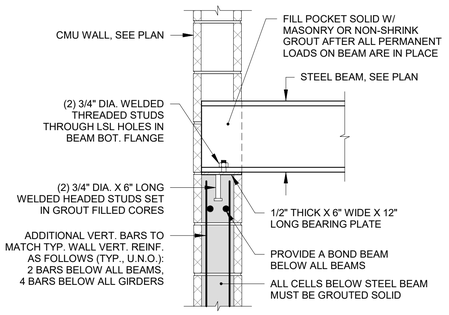

1 TYP. DETAIL FOR STEEL BEAMS BEARING ON CMU WALLS

NTS

NOTES:
1. TYPICAL WALL REINF. NOT SHOWN FOR CLARITY
2. PROVIDE ADD'L VERTICAL REINF. ON EACH SIDE OF BEAM POCKET PER THE TYPICAL DETAILS FOR OPENINGS IN CMU WALLS

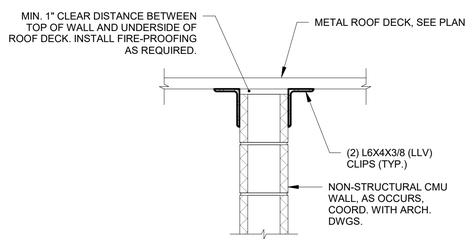

2 TYP. DETAIL FOR LATERAL SUPPORT OF NON-STRUCTURAL CMU WALLS TO UNDERSIDE OF ROOF DECK

NTS

NOTE:
NON-STRUCTURAL CMU WALLS ARE NOT SHOWN ON THE STRUCTURAL DRAWINGS. COORD. ALL LOCATIONS WITH THE ARCH. DRAWINGS.

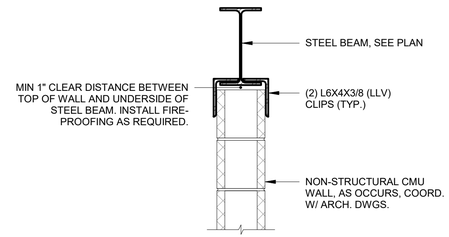

3 TYP. DETAIL FOR LATERAL SUPPORT OF NON-STRUCTURAL CMU WALLS TO UNDERSIDE OF STEEL BEAM

NTS

NOTE:
NON-STRUCTURAL CMU WALLS ARE NOT SHOWN ON THE STRUCTURAL DRAWINGS. COORD. ALL LOCATIONS WITH THE ARCH. DRAWINGS.

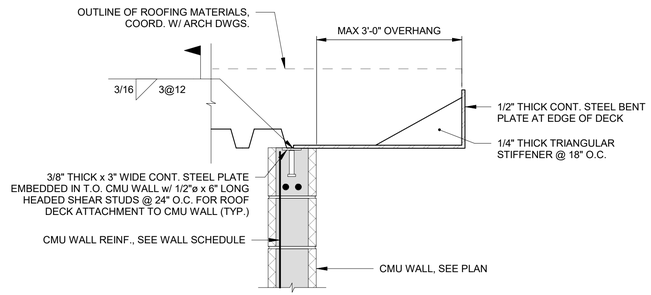

4 SUPPORT OF ROOF DECK AT T.O. CMU WALL

NTS

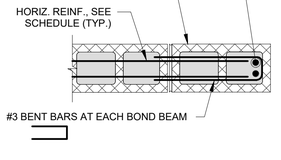

TYP. DETAIL AT END OF CMU WALL

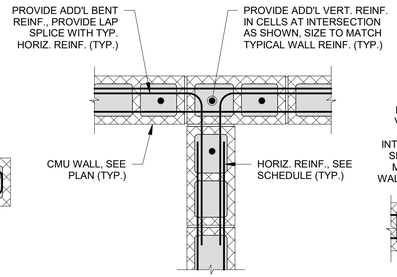

TYP. DETAIL AT CMU WALL INTERSECTION

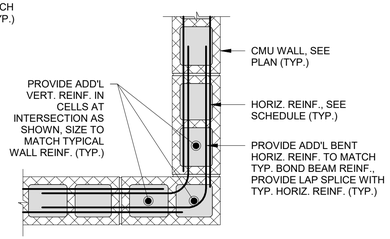

TYP. DETAIL AT CMU WALL CORNER

5 TYP. CMU WALL REINFORCING

NTS

NOTES:
1. CMU WALL SIZES AND INFORMATION REGARDING THEIR REINFORCEMENT IS NOT PROVIDED IN THIS DETAIL. SEE PLANS, SCHEDULES, AND TYPICAL DETAILS FOR MORE INFORMATION ON WALLS AND TYPICAL REINF.
2. SOME TYPICAL REINFORCEMENT MAY NOT BE SHOWN IN THIS DETAIL FOR CLARITY.
3. ALL CELLS CONTAINING REINF. MUST BE GROUTED SOLID.
4. ALL VERT. REINF. MUST EXTEND THE FULL HEIGHT OF WALL U.N.O.
5. ALL MASONRY LAP SPLICES MUST BE 18" MIN.

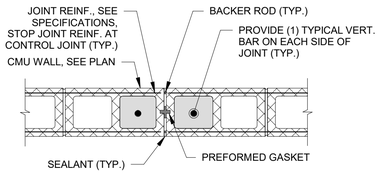

TYPICAL CONTROL JOINT

CONTROL JOINT THROUGH A BOND BEAM

6 TYP. CONTROL JOINT DETAIL

NTS

NOTES:
1. SEE SPECIFICATION SECTION 04 20 00 FOR MORE INFORMATION.
2. BOND BEAMS LOCATED AT TOP OF WALL, AND AT FLOOR AND ROOF DIAPHRAGMS MUST BE CONTINUOUS THROUGH THE CONTROL JOINT.
3. ALL OTHER BOND BEAMS MUST BE INTERRUPTED AT THE CONTROL JOINT.
4. CONTROL JOINT LOCATIONS TO BE PROVIDED AT A LATER DESIGN SUBMISSION. ASSUME A MINIMUM CONTROL JOINT SPACING OF 25 '- 0" FOR COST ESTIMATING PURPOSES.

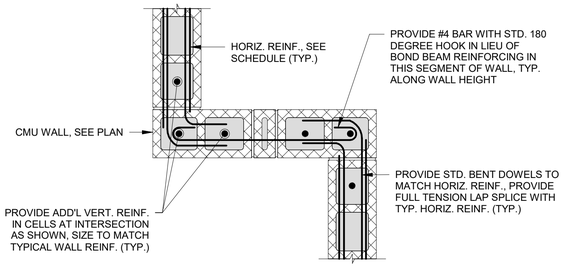

7 CMU WALL JOG REINFORCING

NTS

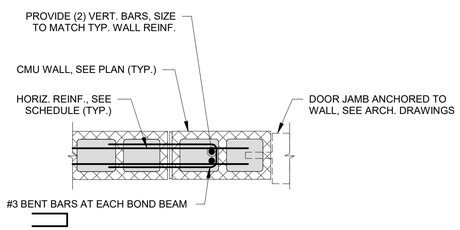

TYP. DETAIL AT DOORFRAME IN CMU WALL

8 CMU WALL REINFORCING AT DOORFRAME

NTS

NOTES:
1. SEE 5 / S-401 FOR NOTES

US Army Corps of Engineers ®

MARK	DESCRIPTION	DATE

ISSUE DATE: AUGUST 29, 2025
SOLICITATION NO.: W912DS23F0031
CONTRACT NO.: W912DS19DD007

DESIGNED BY: CRH
DRAWN BY: MXC
CHECKED BY: BJ
SUBMITTED BY: CRH
SIZE: ANSI D

US ARMY CORPS OF ENGINEERS
NEW YORK DISTRICT
26 FEDERAL PLAZA, NEW YORK, NY 10278

CHILD DEVELOPMENT CENTER
USAG FORT HAMILTON, NEW YORK
PROJECT NO. 75662

TYPICAL CMU DETAILS

SHEET ID

S-401

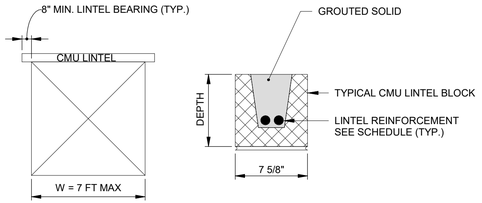

MASONRY LINTEL SCHEDULE			
OPENING WIDTH 'W'	DEPTH	BRG	BOT. REINF.
1'-4" TO 5'-0"	8"	8"	(2) #5
5'-1" TO 7'-0"	16"	8"	(2) #5

1 TYP. CMU LINTEL DETAIL

NTS

NOTE:
OPENINGS IN THE CMU WALLS LARGER THAN WHAT IS SHOWN IN THIS SCHEDULE MUST RECEIVE STEEL LINTELS.

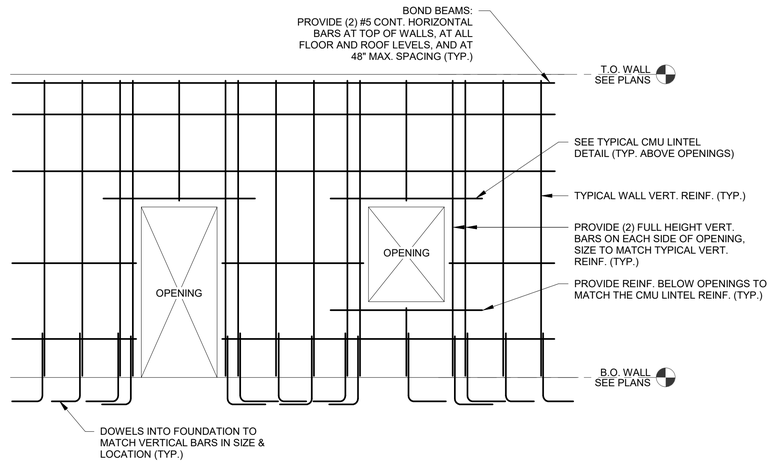

2 TYPICAL CMU WALL ELEVATION

1/4" = 1'-0"

NOTES:
1. CONTRACTOR TO COORDINATE ALL OPENINGS AND PENETRATIONS THROUGH THE CMU WALLS AND SUBMIT TO THE USACE SER PRIOR TO CONSTRUCTION FOR REVIEW AND APPROVAL. THE SUBMISSION MUST SHOW THE SIZE OF THE WALL PENETRATIONS, LOCATION OF PENETRATIONS MEASURED TO GRID LINES, AND ELEVATION OF PENETRATION MEASURED FROM A BUILDING LEVEL.
2. ALL PENETRATIONS THROUGH THE CMU WALLS MUST BE SHOWN ON THE CMU WALL REINFORCING SHOP DRAWINGS. PENETRATIONS WHICH ARE NOT SHOWN ON THE SHOP DRAWINGS ARE NOT ACCEPTABLE.
3. PENETRATIONS THROUGH THE CMU WALLS ARE NOT PERMITTED UNLESS SPECIFICALLY REVIEWED AND APPROVED AS DESCRIBED ABOVE.
4. THE MAXIMUM SIZE OF ANY OPENING THROUGH THE CMU WALL WITHOUT REINFORCEMENT IS 16" x 16".

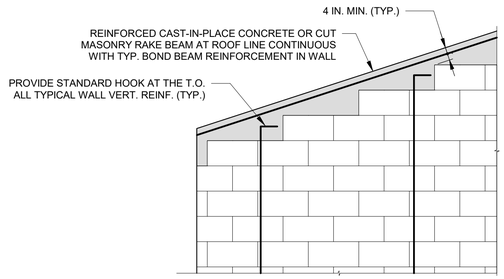

3 CONCRETE RAKE BEAM OPTION @ T.O. GABLE WALLS

NTS

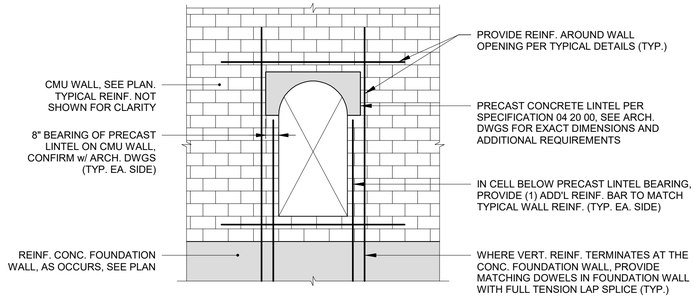

4 ELEVATION AT CURVED OPENINGS IN CMU WALLS

1/4" = 1'-0"

NOTE:
THIS DETAIL SHOWS A CMU WALL OPENING AT AN ARCHED WINDOW. AT OTHER ARCHED OR CURVED WALL OPENINGS, PROVIDE PRECAST CONCRETE LINTEL AND ADDITIONAL WALL REINF. SIMILAR TO THIS DETAIL.

US Army Corps of Engineers ®

MARK	DESCRIPTION	DATE

DESIGNED BY: CRH
DRAWN BY: MXC
CHECKED BY: RLD
SUBMITTED BY: CRH
ISSUE DATE: AUGUST 29, 2025
SOLICITATION NO.: W912DS24F0031
CONTRACT NO.: W912DS19D0007
SIZE: ANSI D

US ARMY CORPS OF ENGINEERS
NEW YORK DISTRICT
26 FEDERAL PLAZA, NEW YORK, NY 10278

CHILD DEVELOPMENT CENTER
USAG FORT HAMILTON, NEW YORK
PROJECT NO. 75662

TYPICAL CMU DETAILS

SHEET ID

S-402

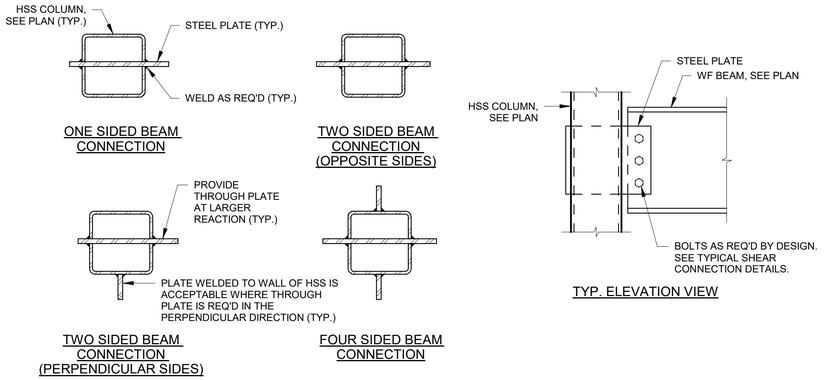

1 TYP. HSS COLUMN THROUGH PLATE CONNECTIONS

NTS

NOTES:

1. STEEL CONNECTIONS ARE A DELEGATED DESIGN PER THE PROJECT SPECIFICATIONS, EXCEPT WHERE SPECIFICALLY INDICATED.
2. THESE CONNECTIONS ARE FOR ILLUSTRATION ONLY AND REPRESENT MINIMUM REQUIREMENTS FOR THE FINAL CONNECTION DESIGN.
3. CONNECTION DESIGN MUST BE IN ACCORDANCE WITH AISC 360 AND ALL OTHER REFERENCED STANDARDS.

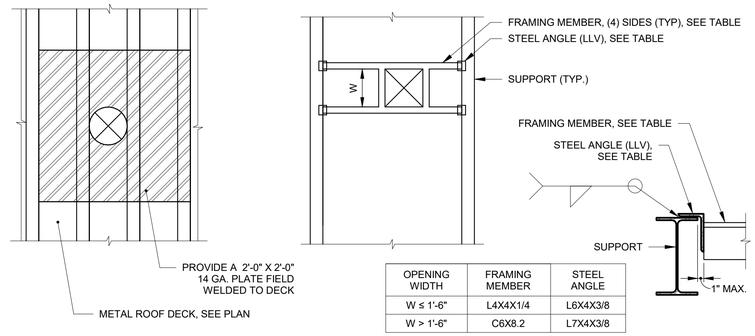

OPENING WIDTH	FRAMING MEMBER	STEEL ANGLE
W ≤ 1'-6"	L4X4X1/4	L6X4X3/8
W > 1'-6"	C6X8.2	L7X4X3/8

2 TYP. OPENING REINF. IN METAL ROOF DECK

NTS

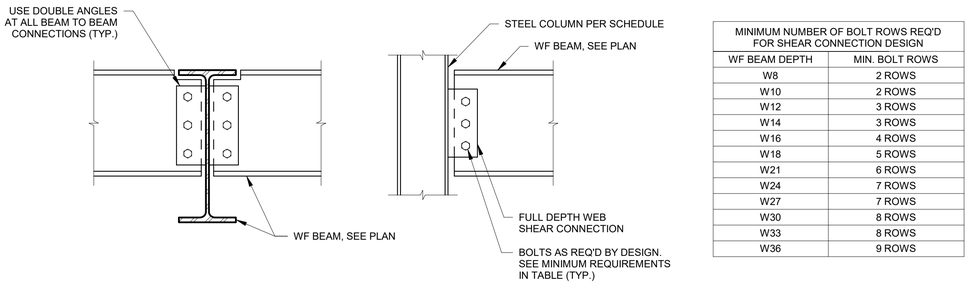

MINIMUM NUMBER OF BOLT ROWS REQ'D FOR SHEAR CONNECTION DESIGN	
WF BEAM DEPTH	MIN. BOLT ROWS
W8	2 ROWS
W10	2 ROWS
W12	3 ROWS
W14	3 ROWS
W16	4 ROWS
W18	5 ROWS
W21	6 ROWS
W24	7 ROWS
W27	7 ROWS
W30	8 ROWS
W33	8 ROWS
W36	9 ROWS

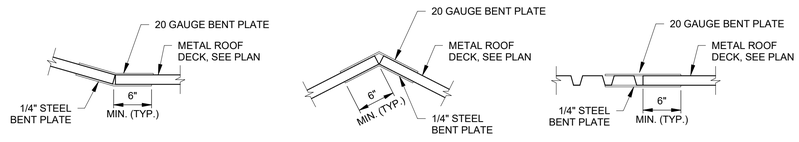

3 TYPICAL STEEL BEAM SHEAR CONNECTION DETAILS

NTS

NOTES:

1. STEEL CONNECTIONS ARE A DELEGATED DESIGN PER THE PROJECT SPECIFICATIONS, EXCEPT WHERE SPECIFICALLY INDICATED.
2. THESE CONNECTIONS ARE FOR ILLUSTRATION ONLY AND REPRESENT MINIMUM REQUIREMENTS FOR THE FINAL CONNECTION DESIGN.
3. CONNECTION DESIGN MUST BE IN ACCORDANCE WITH AISC 360 AND ALL OTHER REFERENCED STANDARDS.
4. SIZE OF PLATES, WELDS, NUMBER & DIAMETER OF BOLTS MUST BE DETERMINED BY FABRICATOR BASED ON CONNECTION DESIGN.
5. FABRICATOR MUST INCLUDE ERECTION TOLERANCE IN THE DETAILING OF ALL CONNECTIONS. STEEL TOLERANCES ARE INDICATED BY AISC.
6. UNLESS NOTED OTHERWISE ON THE STRUCTURAL DRAWINGS, ALL STRUCTURAL STEEL SHEAR CONNECTIONS MUST BE DESIGNED BASED UPON THE MEMBERS' TOTAL UNIFORM LOAD CAPACITY AS DETERMINED FROM THE REFERENCED EDITION OF THE AISC STEEL CONSTRUCTION MANUAL (LRFD) ACCORDING TO THE FOLLOWING CRITERIA:
   - A. COMPOSITE BEAMS:
     - a. W21 AND LOWER: 1.0 X [TOTAL UNIFORM LOAD CAPACITY]
     - b. W24 AND DEEPER: 0.75 X [TOTAL UNIFORM LOAD CAPACITY]
   - B. CANTILEVER BEAMS:
     - a. 1.0 X [TOTAL UNIFORM LOAD CAPACITY]
   - C. ALL OTHER BEAMS:
     - a. 0.5 X [TOTAL UNIFORM LOAD CAPACITY]
   - D. ALL POINT LOAD REACTIONS (E.G. TRANSFERRED COLUMNS) AND BRACE REACTIONS THAT ARE APPLIED TO THE MEMBER MUST BE ADDED TO THESE SHEAR REACTIONS.

4 TYP. ROOF DECK REINF. PLATE DETAILS

NTS

NOTE:

EACH OF THE TRANSITIONS ABOVE MUST HAVE A STEEL BEAM OR OTHER STRUCTURAL FRAMING MEMBERS BELOW THE TRANSITION.

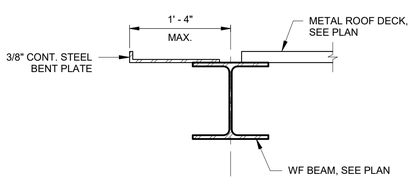

5 TYP. BENT PLATE AT EDGE OF ROOF DECK

NTS

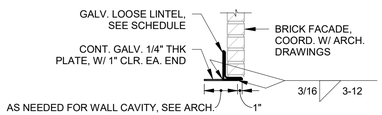

LOOSE LINTEL SCHEDULE	
OPENING SIZE	LINTEL SIZE
0'-0"- 4'-0"	L3-1/2x3-1/2x3/8
4'-1"- 7'-0"	L4x3-1/2x3/8 (LLV)
> 7'-0"	SEE DETAIL: 7 / S-501

6 LOOSE LINTEL SCHEDULE

NTS

NOTES:

1. STEEL LINTELS MUST BE USED AT ALL BRICK OPENINGS WITH CORRESPONDING OPENING SIZE.
2. 1/4" THK PLATE IS NOT REQUIRED AT LOUVER OPENINGS, SEE ARCH. DRAWINGS

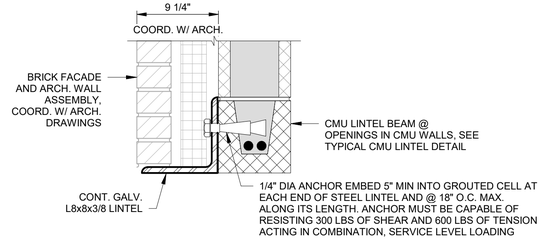

7 TYP. DETAIL FOR BRICK RELIEVING ANGLE BOLTED TO CMU WALLS

1 1/2" = 1'-0"

US Army Corps of Engineers ®

MARK	DESCRIPTION	DATE

DESIGNED BY: CRH
DRAWN BY: MXC
CHECKED BY: ELF
SUBMITTED BY: CRH
SIZE: ANSI D
ISSUE DATE: AUGUST 29, 2025
SOLICITATION NO.: W912DS23F0031
CONTRACT NO.: W912DS19BD007

US ARMY CORPS OF ENGINEERS
NEW YORK DISTRICT
26 FEDERAL PLAZA, NEW YORK, NY 10278

CHILD DEVELOPMENT CENTER
USAG FORT HAMILTON, NEW YORK
PROJECT NO. 75662

TYPICAL STEEL DETAILS

SHEET ID

S-501

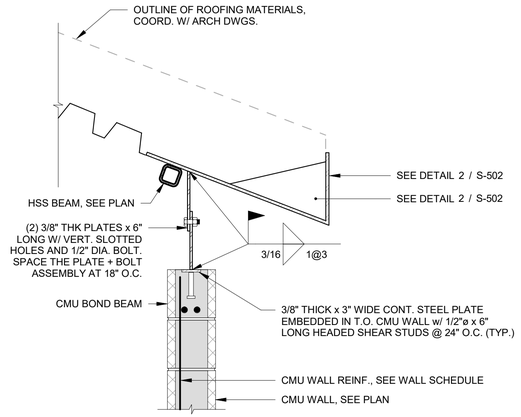

1 DETAIL BETWEEN TRUSSES

1" = 1'-0"

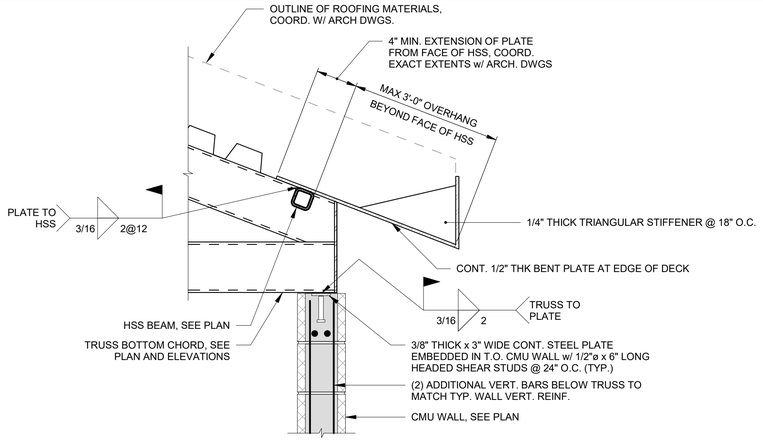

2 DETAIL FOR BENT PLATE PARALLEL TO TRUSSES

1" = 1'-0"

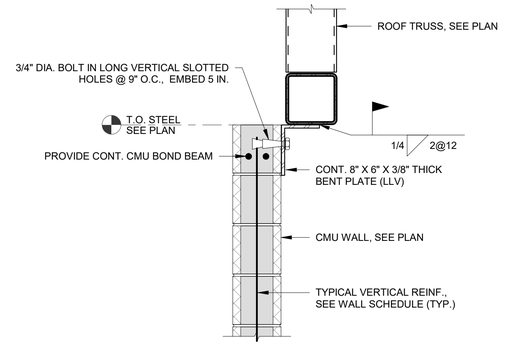

3 TYP. DETAIL FOR DRAG FORCE CONNECTION TO CMU SHEAR WALLS

1" = 1'-0"

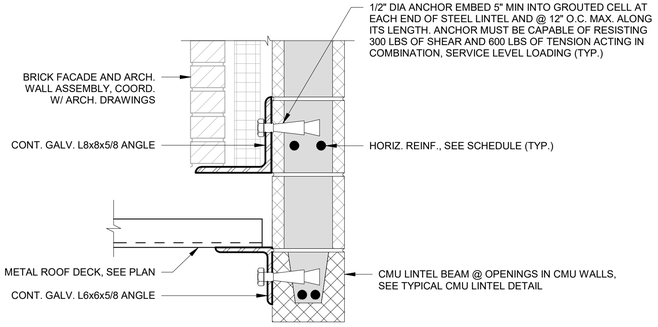

4 DETAIL FOR BRICK RELIEVING ANGLE BOLTED TO CMU WALLS AT CANOPY ENTRANCE

1 1/2" = 1'-0"

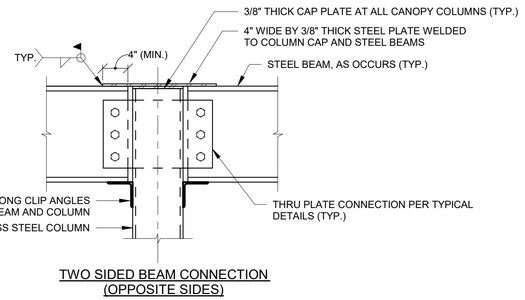

TWO SIDED BEAM CONNECTION (OPPOSITE SIDES)

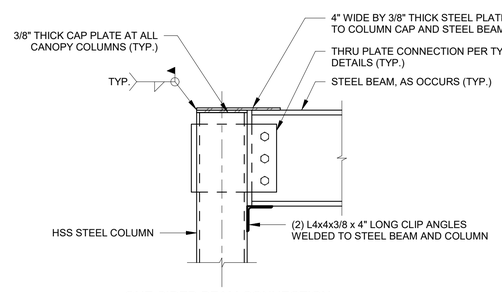

ONE SIDED BEAM CONNECTION

5 CANOPY STEEL COLUMN MOMENT CONNECTION

NTS

NOTE:
FOR THREE SIDED BEAM CONNECTIONS, PROVIDE A THROUGH PLATE FOR THE BEAMS ON OPPOSITE SIDES, AND A PLATE WELDED TO THE WALL OF THE HSS FOR THE PERPENDICULAR BEAM. SEE DETAIL 1 / S-501 FOR EXAMPLE CONFIGURATIONS. PROVIDE MOMENT CONNECTIONS BASED ON WHAT IS SHOWN ABOVE WHERE INDICATED ON PLAN.

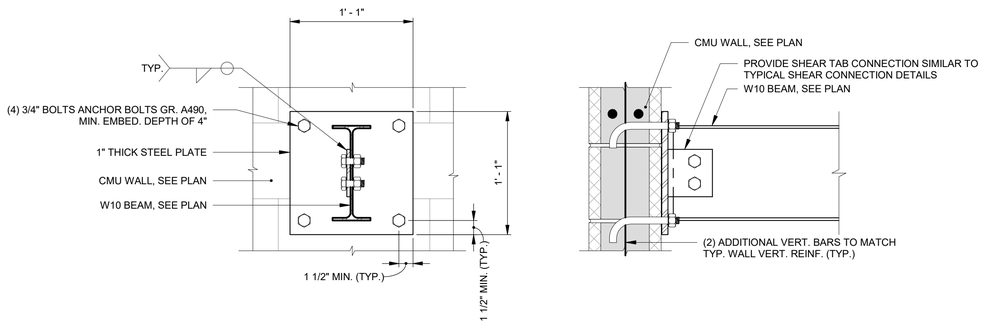

6 CANOPY BEAM CONNECTION TO CMU WALL USING BOLTED PLATE

1 1/2" = 1'-0"

NOTE:
THIS DETAIL IS ONLY TO BE USED AT THE CANOPY LOCATIONS MARKED ON PLAN. THIS DETAIL HAS NOT BEEN DESIGNED FOR OTHER LOCATIONS OR CONDITIONS.

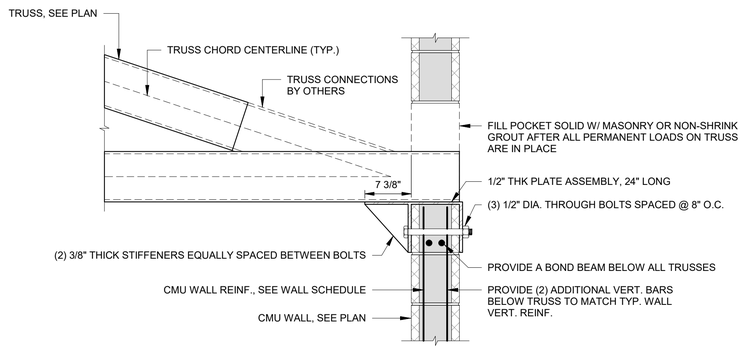

7 TRUSS BEARING DETAIL ALONG GRID C.1

1" = 1'-0"

US Army Corps of Engineers ®

MARK	DESCRIPTION	DATE

ISSUE DATE: AUGUST 29, 2025
SOLICITATION NO.: W912DS23F0031
CONTRACT NO.: W912DS19BD007

DESIGNED BY: CRH
DRAWN BY: CRH
CHECKED BY: EJ
SUBMITTED BY:
SIZE: ANSI D

US ARMY CORPS OF ENGINEERS
NEW YORK DISTRICT
26 FEDERAL PLAZA, NEW YORK, NY 10278

CHILD DEVELOPMENT CENTER
USAG FORT HAMILTON, NEW YORK
PROJECT NO. 75662

STEEL DETAILS

SHEET ID

S-502

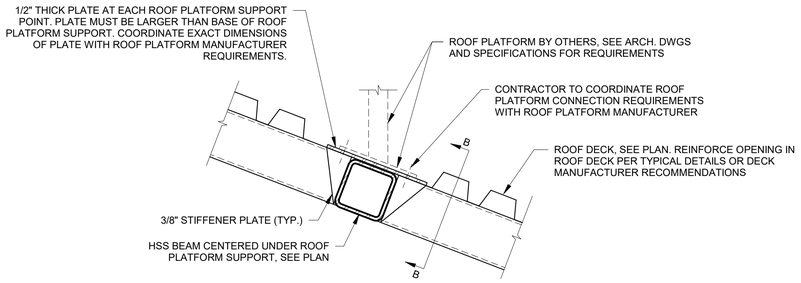

SECTION A-A

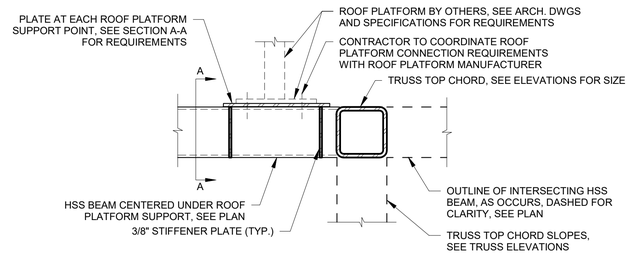

SECTION B-B
(ROOF DECK NOT SHOWN FOR CLARITY)

1 DETAIL FOR ROOF PLATFORM SUPPORTS
1" = 1'-0"

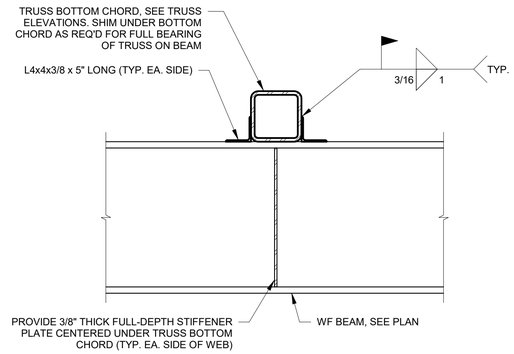

2 DETAIL FOR TRUSS BEARING ON BEAMS
1" = 1'-0"

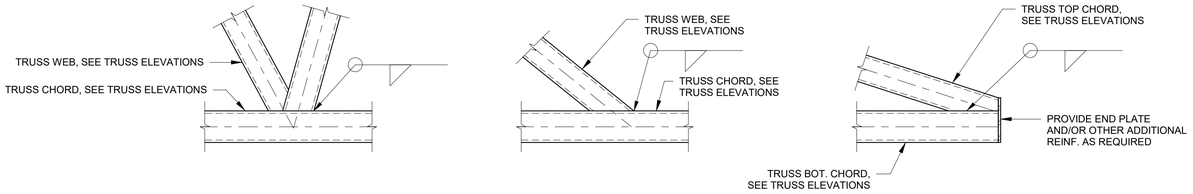

3 SCHEMATIC ROOF TRUSS CONNECTION DETAILS
1" = 1'-0"

NOTES:
1. ROOF TRUSS CONNECTIONS ARE A DELEGATED DESIGN PER THE PROJECT SPECIFICATIONS.
2. THESE CONNECTIONS ARE FOR ILLUSTRATION ONLY AND REPRESENT MINIMUM REQUIREMENTS FOR THE FINAL CONNECTION DESIGN.
3. CONNECTION DESIGN MUST BE IN ACCORDANCE WITH AISC 360 AND ALL OTHER REFERENCED STANDARDS.
4. SIZE OF WELDS MUST BE DETERMINED BY FABRICATOR BASED ON CONNECTION DESIGN.
5. FABRICATOR MUST INCLUDE ERECTION TOLERANCE IN THE DETAILING OF ALL CONNECTIONS. STEEL TOLERANCES ARE INDICATED BY AISC.
6. SEE TRUSS ELEVATIONS FOR AXIAL FORCES IN TRUSSES.
7. PROVIDE LOCAL REINFORCEMENT AS REQUIRED BASED ON THE CONNECTION DESIGN.
8. CONNECTION DESIGN MUST BE STAMPED AND SIGNED BY A PROFESSIONAL ENGINEER LICENSED IN THE STATE IN WHICH THE PROJECT IS LOCATED. SUBMIT TO USACE FOR REVIEW AND APPROVAL.

US Army Corps of Engineers ®

MARK	DESCRIPTION	DATE

DESIGNED BY: CRH
DRAWN BY: MXC
CHECKED BY: BM
ISSUE DATE: AUGUST 29, 2025
SOLICITATION NO.: W912DS23F0031
CONTRACT NO.: W912DS19DD007
SUBMITTED BY: CRH
SIZE: ANSI D

US ARMY CORPS OF ENGINEERS
NEW YORK DISTRICT
26 FEDERAL PLAZA, NEW YORK, NY 10278

CHILD DEVELOPMENT CENTER
USAG FORT HAMILTON, NEW YORK
PROJECT NO. 75662

STEEL DETAILS

SHEET ID

S-503