Visitor Information Sign System

VIS and Wayside Hardware Specification Manual

Harpers Ferry Center for Media Services
Harpers Ferry, WV 25425
www.nps.gov/hfc

Revision 5 March 15, 2023

Disclosure Statement NPS Sign Standards

This publication is an administrative document developed for the guidance of employees of the National Park Service, its contractors, cooperating partners, and federal and state government agencies.

The National Park Service assumes no responsibility for the interpretation or application of the standards and information contained in this manual by other than its own employees. The use of trade names, product specifications, identification of firms and corporations in no way constitutes an official endorsement or approval by the United States Government of any product, process, or service to the exclusion of others that may be suitable.

Table of Contents

VIS System Overview	4
Section I - TrailSide Series (TS)	17
Section II - Wall Mount Series (WM)	20
Section III - Low Profile / Wayside Series (LP)	26
Section V - Upright Series (UP)	31
Section V - VIS Hardware Accessories	48
Section VI - VIS Fabrication Drawings	55
Section VII - Specifications	178
Amendment: Cane Detection Rail	187

VIS System Overview

Introduction	5
VIS System Overview	6
VIS Hardware Assembly Series	7
VIS Hardware Base Material Options	8
VIS Hardware Mounting Options	9
VIS Panels	10
VIS Panel Sizes	11
VIS Hardware Assembly Codes	15

Introduction

Signs are the most frequently used means of communicating with park visitors. The National Park Service UniGuide Sign Standards provide design and fabrication guidelines for a full range of park signs including Park Identity, Motorist Guidance and Visitor Information (VIS).

It is estimated that approximately 75% of all park signs fall into the Visitor Information (VIS) category. VIS Signs are designed to present information in a consistent, attractive, convenient, and flexible format. Such information may involve pedestrian or bicycle and (low–speed) motorist guidance, regulations, resource protection, instructions and general information, fee information, safety warnings, maps, and interpretation. VIS Signs may also be used to identify parks (or park areas, features, or facilities) when more monumental identification signs are not required.

The flexible system of post and frame hardware components may be configured in a variety of ways to hold modular sign panels and other accessories. VIS hardware is available in a range of durable materials to suit local conditions, all selected for vandal resistance, low maintenance, and long life–cycle performance.

Sign frames are designed to hold graphic panels made from a variety of materials including porcelain enamel, fiberglass embedment, polycarbonate embedment, high pressure laminate, digitally printed adhesive vinyl on aluminum substrates with protective overlaminates, or computer cut retro–reflective sheeting.

Besides supporting sign panels, VIS hardware is designed to accommodate a number of accessories including bulletin cases, brochure holders, and posting displays.

This manual provides details and information on the specification and fabrication of VIS hardware.

VIS System Overview

The VIS system consists of a welded frame and core panel that can be attached to posts to create Low Profile wayside bases, Upright Sign Bases, or for Wall Mount displays. The system consists of an aluminum extrusion or a break–formed steel frame with an internal structural core panel. Sign frames are designed to capture the graphic panel on four sides and includes a secure, but removable, capture rail for ease in changing panels.

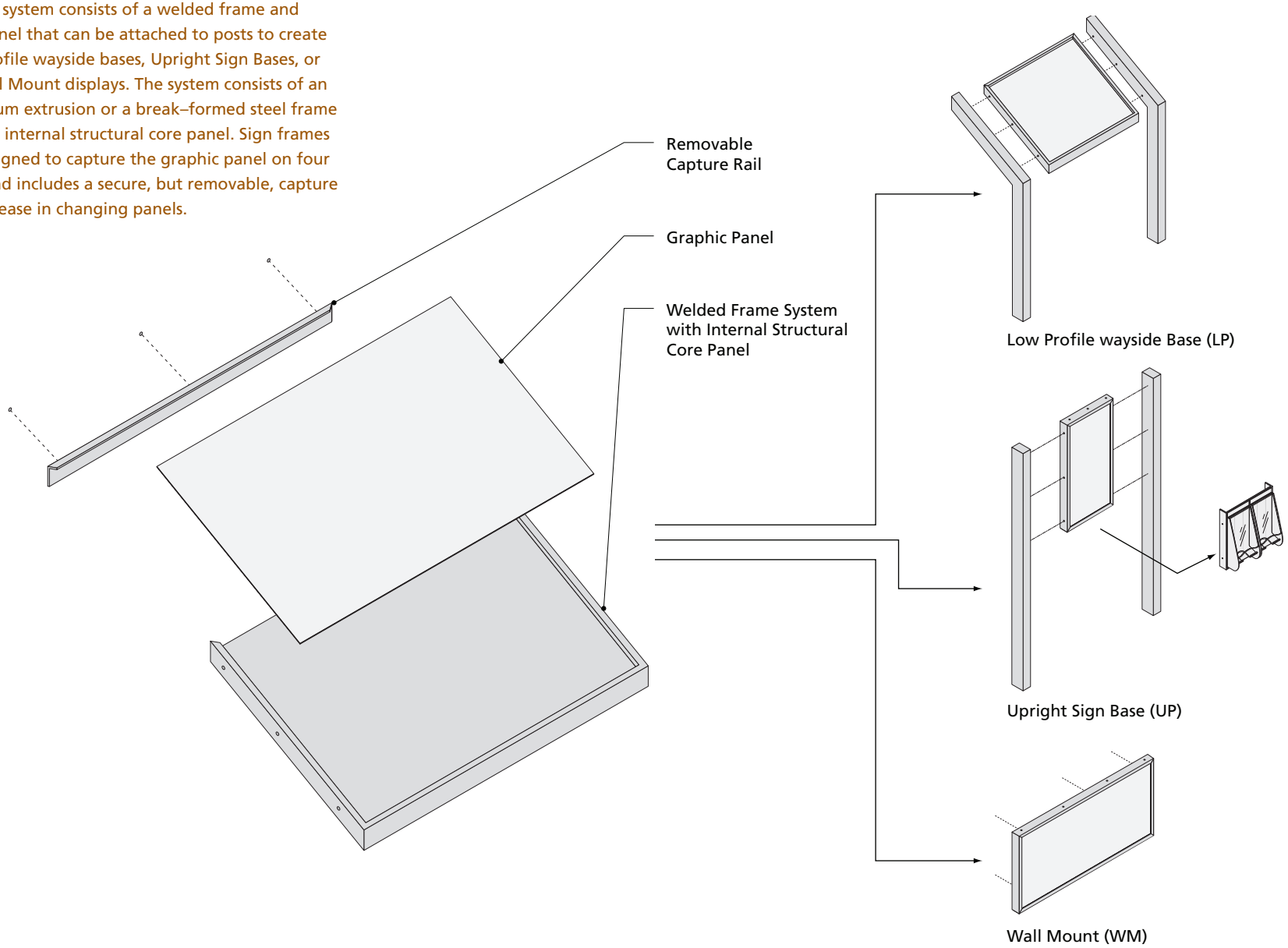

Accessories that can be attached to upright bases include bulletin cases, brochure holders, and miscellaneous post displays.

VIS Hardware Assembly Series

The chart to the right provides an overview of the base hardware available in the VIS system.

All VIS bases are available in a variety of material options including weathering steel, galvanized steel, and painted aluminum. Painted aluminum bases are available in three paint color finishes.

The material and finish appropriate for a specific base depends primarily on the sign's purpose and its location. Weathering steel is an excellent choice for low maintenance in many forested and desert sites; galvanized steel is very durable in coastal and other salt–water and corosive environments; and painted aluminum may be a good choice for an urban environment.

TS Series - Trailsides

Low to the ground, Trailsides are an excellent choice for plant ID markers, site markers, trail guides, and anywhere a small discreet sign is required.

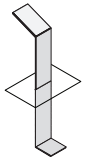

LP Series - Low Profile

The Low Profile base is the preferred style for NPS interpretive outdoor exhibits. Available in a variety of material finishes and sizes the base's simple, unadorned form makes it appropriate for any park landscape.

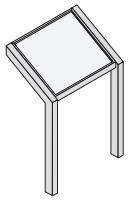

WM Series - Wall Mount

Wall Mount frames are designed to display information on vertical surfaces. Frames are available in a variety of materials and sizes.

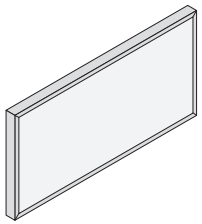

UP Series - Uprights

Designed to stand vertically so they attract attention, Upright bases typically provide practical information to visitors rather than site–specific interpretation. Like the Low Profile base, Upright bases are available in a variety of material finishes and sizes. Bases can be fabricated as a single unit, double or triple inline unit, and tri-sided and four–sided units. The single unit and inline bases can be configured for one or two-sided display. All of the uprights, (in certain preset sizes) are available with or without a roof structure. Each base is designed to hold panels or other accessories including bulletin cases.

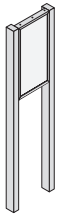

Upright Base

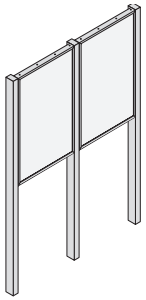

Upright Inline 2

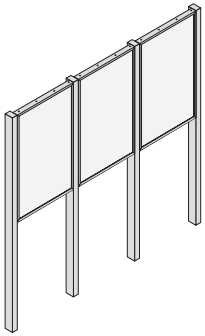

Upright Inline 3

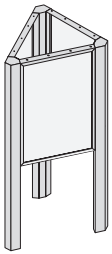

Upright Tri (Tri-Side)

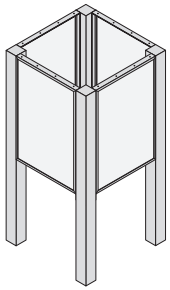

Upright Quad (Four-Side)

VIS Hardware Base Material Options

VIS base hardware is available in two standard material options: aluminum and steel.

Aluminum

Aluminum is the most versatile material, well-suited for almost any environment. Painted aluminum bases have a durable spatter coat finish but do require cleaning and paint touch-ups over time.

Alternately, aluminum bases can have an unpainted, hand-sanded finish which has a silvery textured look. Sanded aluminum is ideal for marine environments and is a great low-maintenance material.

Weathering Steel

Weathering steel is idea for natural settings where general maintenance is difficult. Weathering steel bases can last well over 15 years but are not recommended for use in salty marine environments.

New weathering steel arrives black with silver patches around weld joints. Over time the surface will change to a uniform rust brown. This takes 6+ months depending on humidity and precipitation. Once the surface is fully weathered, rust will not rub off or leak onto the ground.

Standard Aluminum Paint Colors

NPS Dark Brown Matthews Paint MP63856 with Spatter Finish

NPS Medium Grey Matthhews Paint MP63850 with Spatter Finish

NPS Brown Matthhews Paint MP63848 with Spatter Finish

Note: Colors shown are for representation only. Actual color chips should be matched to the specification for accuracy.

Galvanized Steel

Galvanized steel is not recommended for exhibit frames due to tight tolerances and the potential for warping. It maybe used for base legs and mounts in marine environments as well as for trailside bases.

VIS Hardware Mounting Options

The chart to the right provides a basic overview of the hardware installation options available in the VIS system. Refer to the fabrication details for more information.

Direct Embedment (DE)

Direct embedment is the typical mounting method for all VIS hardware. Post depth is typically 30" to 36" and posts are secured with concrete.

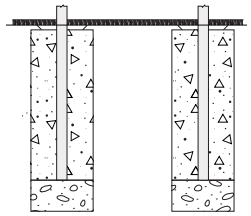

Direct Embedment Stabalizer Fins (SF)

Stabilizer fins are another mounting accessory for direct embedment. Plates are attached to each base leg. The fins allow installation of the base without the use of concrete.

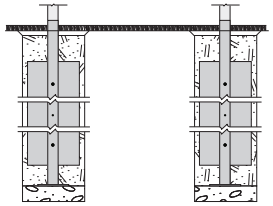

Cap Mount (CM)

Wall mounted bases use a modified baseplate that facilitates installation on low walls.

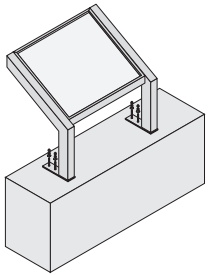

Direct Embedment Socket Mount (SM)

Socket mounting allows the VIS base to be removed. Oversized sleeves are secured in the ground and the base can slide in and out. This is an excellent choice for park areas with huge snowfall or flood conditions.

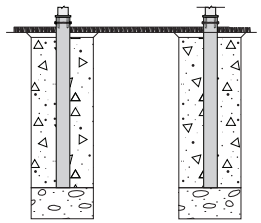

Baseplate Mount (BP)

Baseplate mounting allows installation where a deep footer is not practical. The base features a welded baseplate that attaches to imbeded j-bolts or all-thread rods.

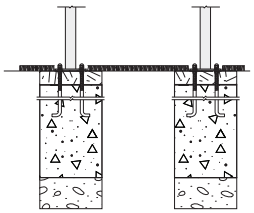

Sled Base (SB)

The sled base allows the frame and post to be free standing. For security the base can be mounted with threaded rods.

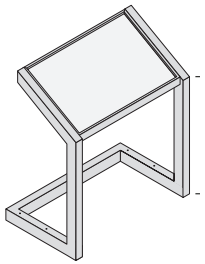

Direct Embedment Stabalizer Bars (SB)

Stabilizer bars are a mounting accessory for direct embedment. The bars are welded to each base leg and prevent racking due to loose and shifting soil. This is a good choice for seashore conditions.

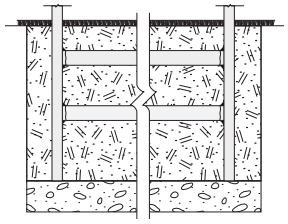

Deck Mount (DM)

Deck mount hardware uses a baseplate and anchors to install the base on wooden decks and walkways. Deck mounts are typically custom and site specific.

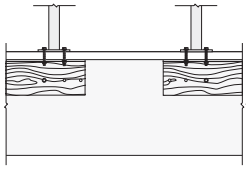

VIS Panels

VIS graphic panels are designed to provide an attractive and consistent way to present a broad range of messages. This includes park and facility identity, park regulations, safety warnings, information, interpretation, pedestrian guidance, low speed motorist guidance, and other wayfinding information including maps. The modular grids and design standards of VIS signs allows presentation of content in discrete, easily comprehended "eyefuls" which aids in visitor comprehension and retention of information.

Please refer to the *Visitor Information System, Panel Specification Manual* for more information.

Panels may be produced in porcelain enamel, high pressure laminate, fused polycarbonate, fiberglass embedment, digitally printed adhesive vinyl, or computer cut retro–reflective sheeting.

Selection of material is based on life-cycle cost, budget, exposure to wear, and need for retro–reflective legends if viewed from an automobile. Production methods include digital printing, screen printing, and adhesive–backed computer–cut vinyl.

Park Identity and Entrance Signs

Park Fee Signs

Informational Signs

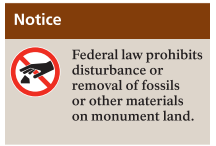

Warning and Danger Signs

6" and 12" Series Panel Sizes

A modular system of panels is available to fit all the VIS hardware bases. Panel dimensions are specified by width(w) x height(h). Panels are specified in nominal dimensions. Fabricated panels are undercut by 1/16" on each side. For example, a 6" x 6" panel is 5 7/8" x 5 7/8". Post size is determined by panel or base size. Refer to the VIS Post Hardware charts in the fabrication details.

6" Series Panels

VIS Hardware Assembly Series: TS and UP

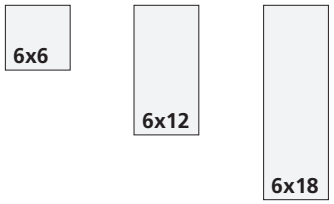

12" Series Panels

VIS Hardware Assembly Series: LP and UP

VIS Hardware Assembly: UP

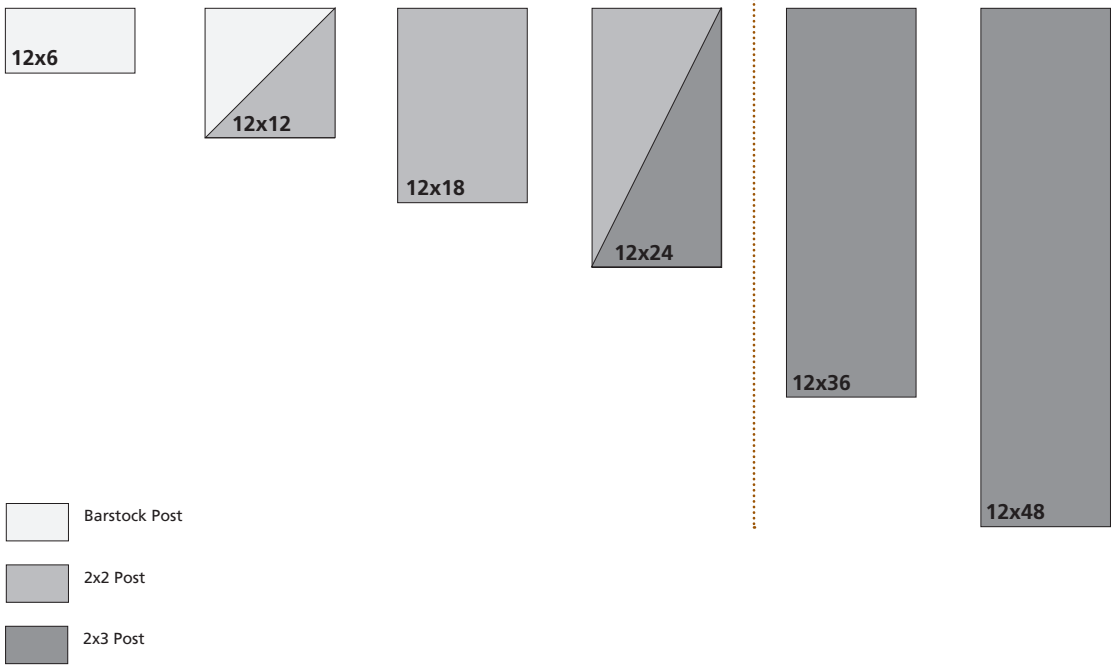

18" and 24" Series Panel Sizes

18" Series Panels

VIS Hardware Assembly Series: LP and UP

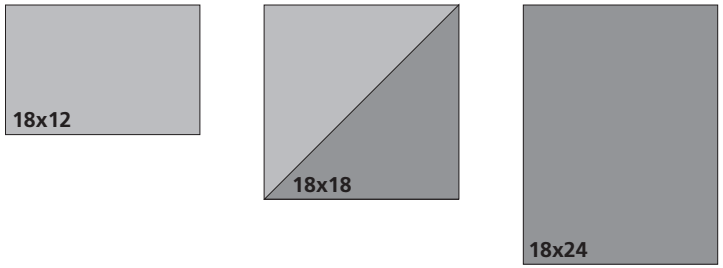

VIS Hardware Assembly Series: UP

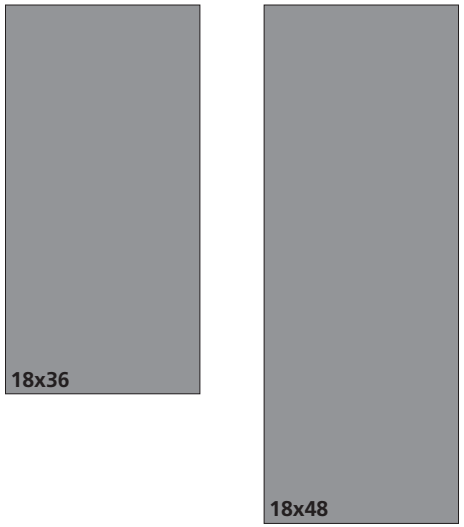

24" Series Panels

VIS Hardware Assembly Series: LP and UP

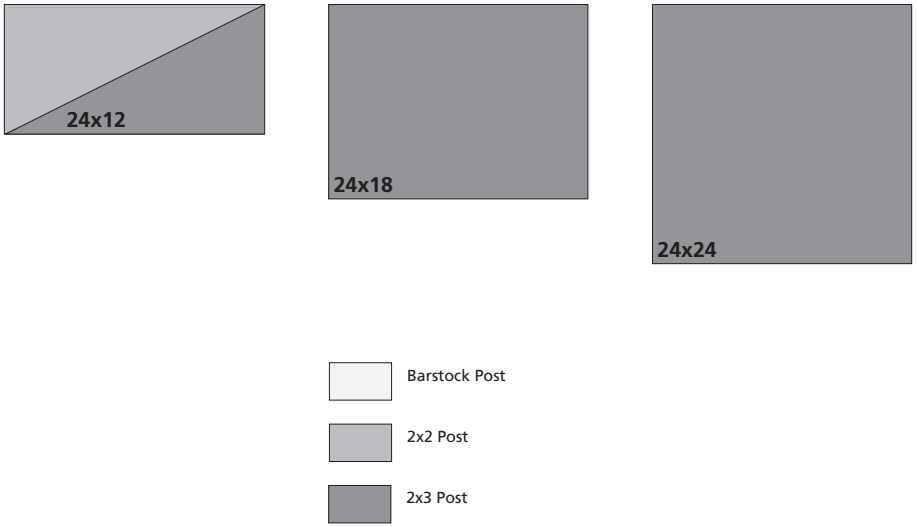

VIS Hardware Assembly Series: UP

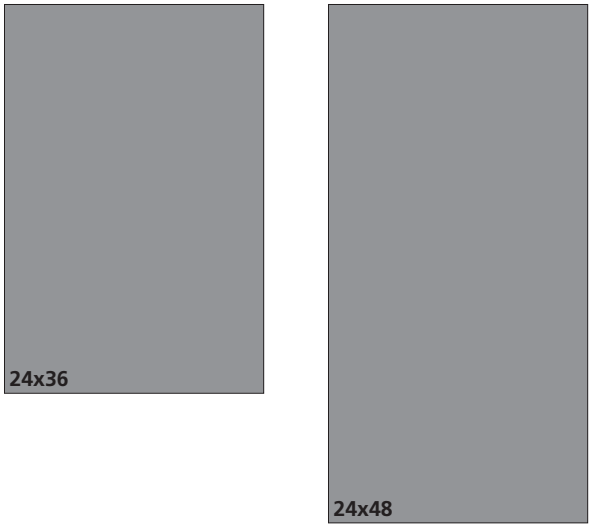

36" Series Panel Sizes

36" Series Panels

VIS Hardware Assembly Series: LP and UP

VIS Hardware Assembly Series: UP

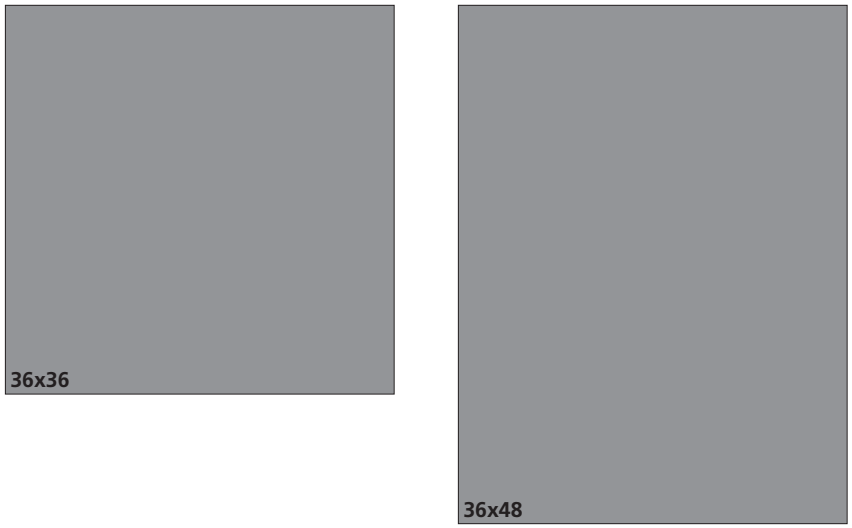

Barstock Post

2x2 Post

2x3 Post

48" Series Panel Sizes

48" Series Panels

VIS Hardware Assembly Series: LP and UP

Barstock Post

2x2 Post

2x3 Post

VIS Hardware Assembly Codes

Although the VIS is a system of simple components, material choices, panel sizes, and mounting options offer a multitude of fabrication options. In order to adequately describe a base and its attributes a code system has been created to aid in specification of base hardware.

The code system provides the information necessary to describe the base, its size, mounting, and other options for fabrication. A sample specification code might look like this:

UP_24x36_WS_DE_PF_BC

The code breaks down as follows:

UP

This is the frame type. UP is the specification code for an upright base.

24x36

This is nominal frame size or bulletin case size. In this case a 24 x 36 bulletin case mounts to the base.

WS

This is the material type. This frame will be made from weathering steel.

DE

This is the mounting type. This frame will be a direct embed.

PF

This is the mounting accessory. This frame posts will have post fins for inground stabilization.

BC

This is the base accessory. In this case the base will have a bulletin case instead of a panel.

How to Specify a VIS Base

With the code system it is easy to specify the base type. For this exercise it is assumed all the decisions about the base have been made including the size, panel content, material mounting, and location.

Use the Code Charts on the page 16 to specify your base.

Step 1. Choose Base Type

From the VIS Hardware Assembly Chart choose the correct assembly code. If necessary refer to the VIS Hardware Assembly Descriptions on page 7.

Step 2. Choose Nominal Panel Size

If necessary refer to Panel Size Charts, beginning page 11.

Step 3. Choose Base Material

Aluminum, weathering steel, or galvanized steel.

Step 4. Choose Mounting Method

Step 5. Choose Mounting Accessory (If Required)

Step 6. Choose Base Accessory

This could be a bulletin case, brochure dispenser, or roof structure for a tri or quad upright.

Step 7. Additional Notes

Here you would indicate additional information for the fabricator including custom requests or modifications and colors.

VIS Hardware Assembly Codes Charts

VIS Hardware Assembly Type

Code	Descriptions
TS	Trailside Base
WM	Wall Mount
LP	Low Profile Wayside Base
UP	Upright Base
UPN2	Upright Inline 2 (Double)
UPN3	Upright Inline 3 (Triple)
UPTR	Upright Tri-Sided (Kiosk)
UPQU	Upright Quad-Sided (Kiosk)

VIS Material Options Chart

Code	Descriptions
WS	Weathering Steel
GS	Galvanized Steel
AL	Painted Aluminum
SA	Sanded Aluminum

VIS Hardware Mounting Type

Code	Descriptions
DE	Direct Embedment
BP	Base Plate
SM	Socket Mount
SB	Sled Base (Free Standing)
DM	Deck Mount
WM	Wall Mount

VIS Hardware Mounting Accessory

Code	Descriptions
PF	Post Fins (Embed w/o Concrete)
SB	Stabilizer Bars (For Shifting Soils)

VIS Hardware Accessory

Code	Descriptions
BC	Bulletin Case
BH	Brochure Holder
MP	Miscellanous posting
RS	Roof Structure (Upright Only)
SK	Strap Kit

Section I

Trailside Series (TS)

Trailside Series Overview (TS) 18

Trailside Base Sizes 19

6" Series

Trailside Series Overview (TS)

Small and simply formed, NPS “trailside” exhibits bases offer an unobtrusive way to provide brief interpretive message or important safety information with minimal impact on the landscape. Trailsides are available in weathering steel, galvanized steel, or aluminum and can accommodate several types of graphic panels, attached with stainless steel barrel nuts as shown on page 58. The final assembly is mounted by direct embedment into the ground. The angled tab at the bottom of the base prevents uplift and removal once the base is installed.

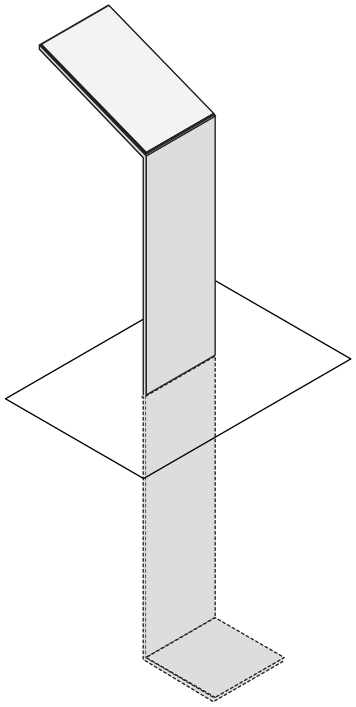

6" Series

Scale: 1/2" = 1'

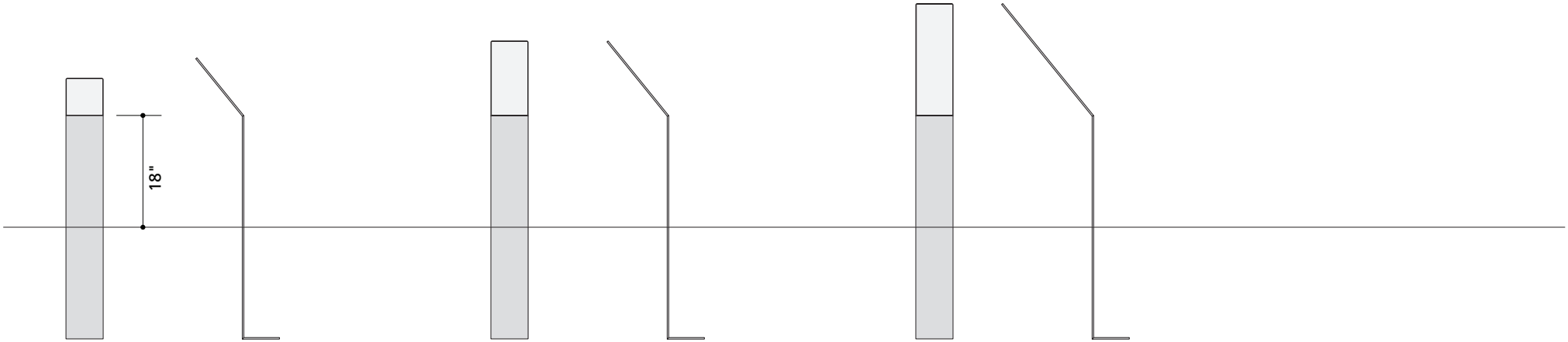

TS-6x6

TS-6x12

TS-6x18

Section II

Wall Mount Series (WM)

Wall Mount Series Overview (WM) 21

Wall Mount Frame Sizes 22

- 12" Series
- 18" Series
- 24" Series
- 36" Series
- 48" Series

Wall Mount Series Overview (WM)

When possible and permitted, graphic panels may be mounted on walls or buildings rather than on a free-standing exhibit base by using the frame assembly illustrated here. These frames are available in weathering steel and aluminum and includes all required mounting hardware (see page 63 for mounting details). The top frame member is secured by a replaceable set screw which can be easily removed to allow panel replacement.

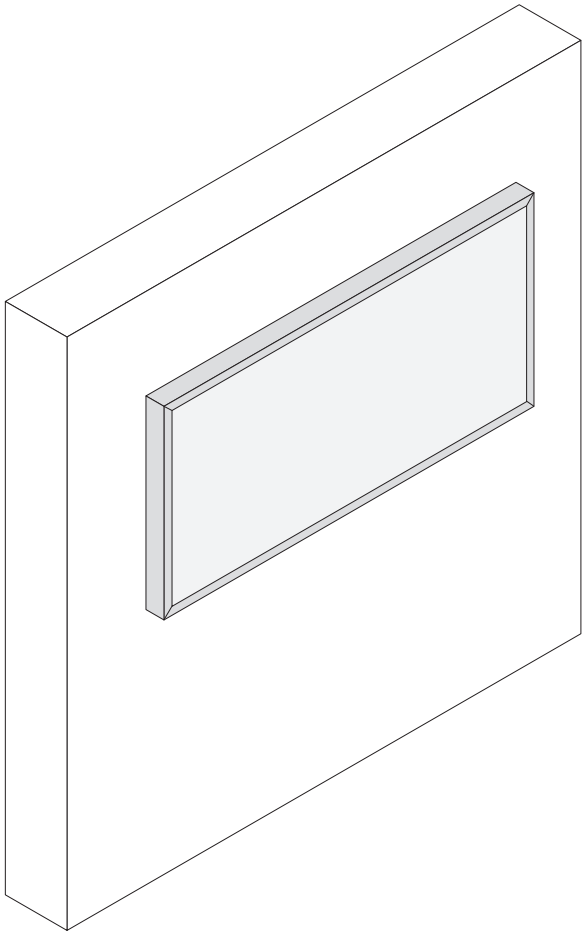

12" Series

Scale: 1/2" = 1'

18" Series

Scale: 1/2" = 1'

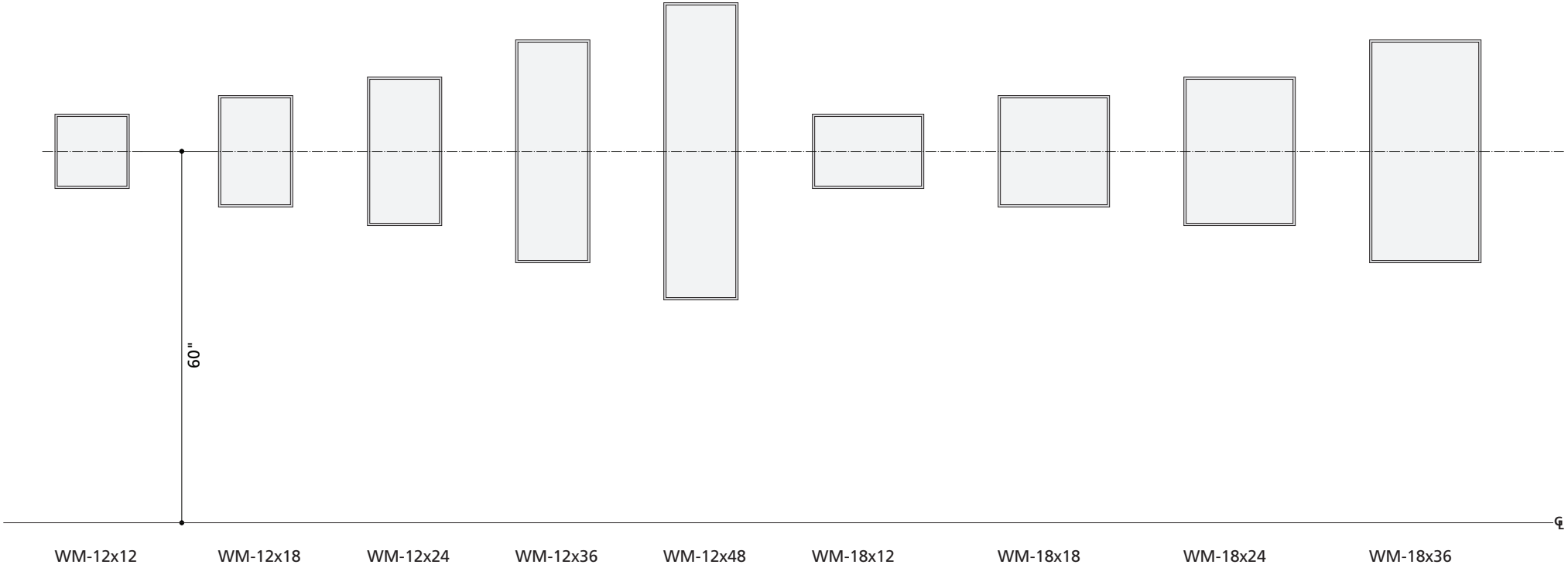

24" Series

Scale: 1/2" = 1'

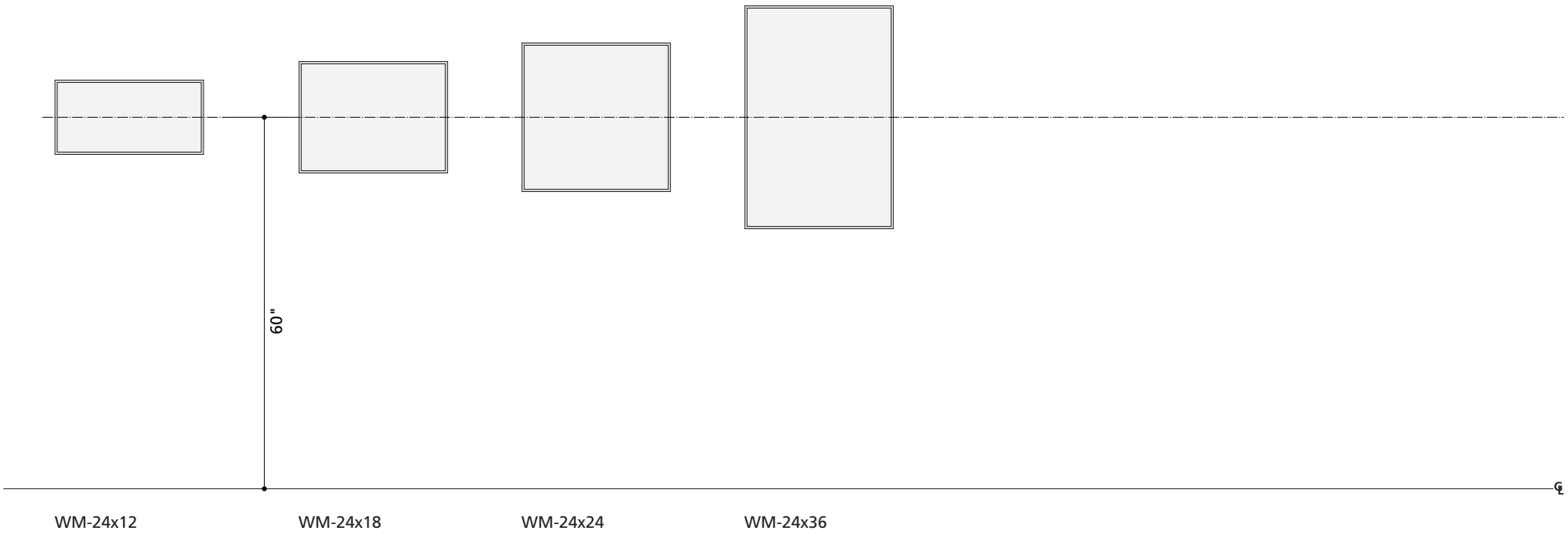

36" Series

Scale: 1/2" = 1'

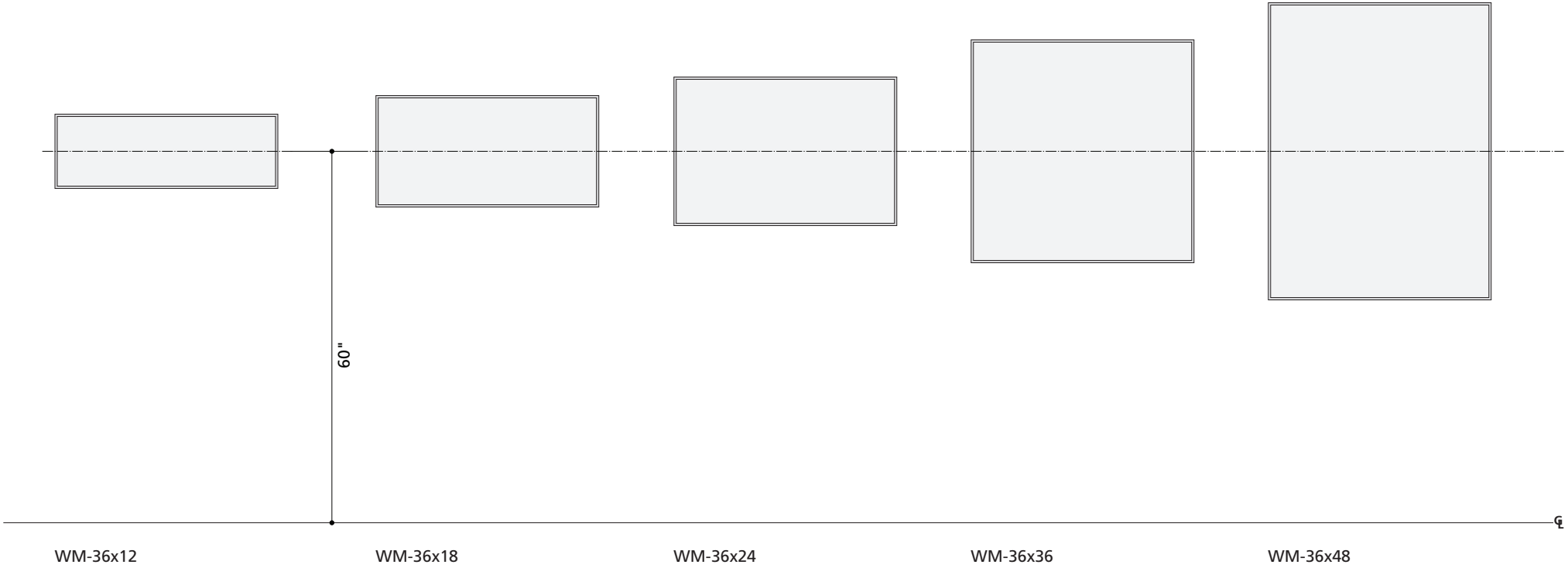

48" Series

Scale: 1/2" = 1'

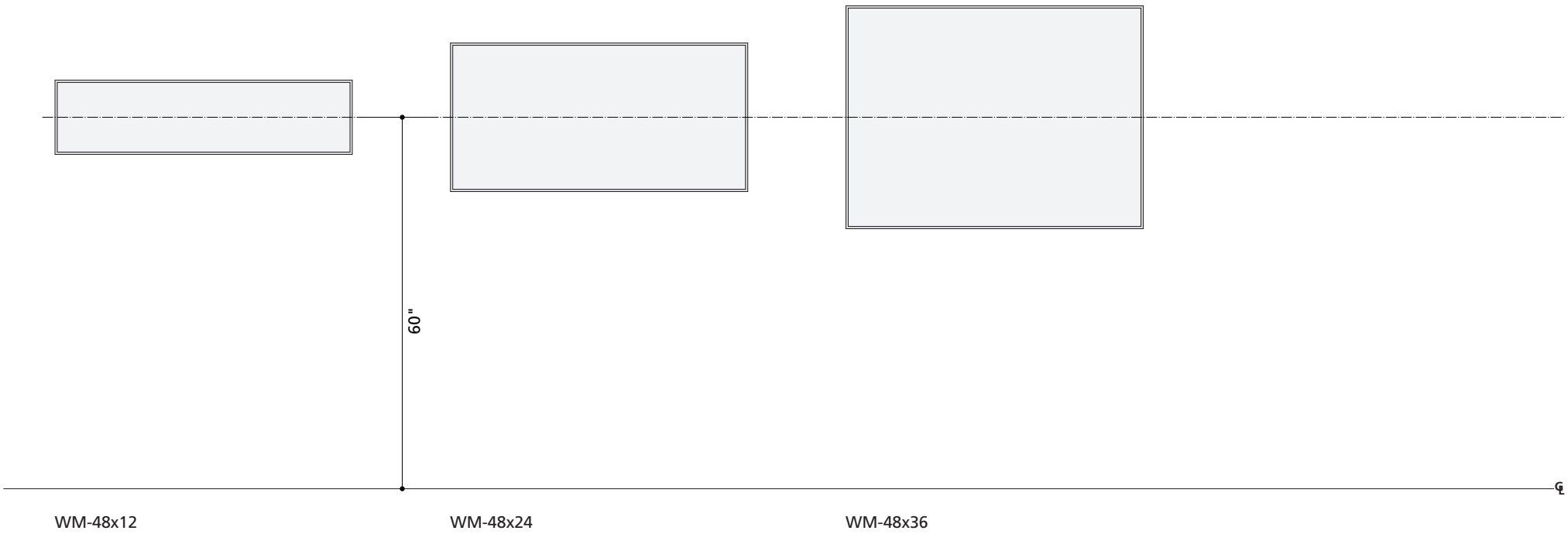

Section III

Low Profile Series / Wayside Series (LP)

Low Profile Overview (LP) 27

Low Profile Base Sizes 28

- 6" Series
- 12" Series
- 18" Series
- 24" Series
- 36" Series
- 48" Series

Low Profile Series Overview (LP)

NPS “low–profile” wayside exhibit bases are designed to diminish their presence on the landscape by using the least material required to securely hold an exhibit panel. Panels are positioned at a 45–degree angle to permit visitors a clear view of the feature that the exhibit interprets. Bases are available in two materials, appropriate to a variety of landscapes: weathering steel for natural environments and aluminum (in three standard colors or hand-sanded) for urban and coastal areas. The legs of most wayside bases are directly embedded into the ground, although other mounting methods are available to accommodate site conditions. As illustrated on the following pages, NPS waysides bases come in a wide range of panel sizes which are held within a full-frame assembly. The top frame member is secured by a replaceable set screw which can be easily removed to allow panel replacement.

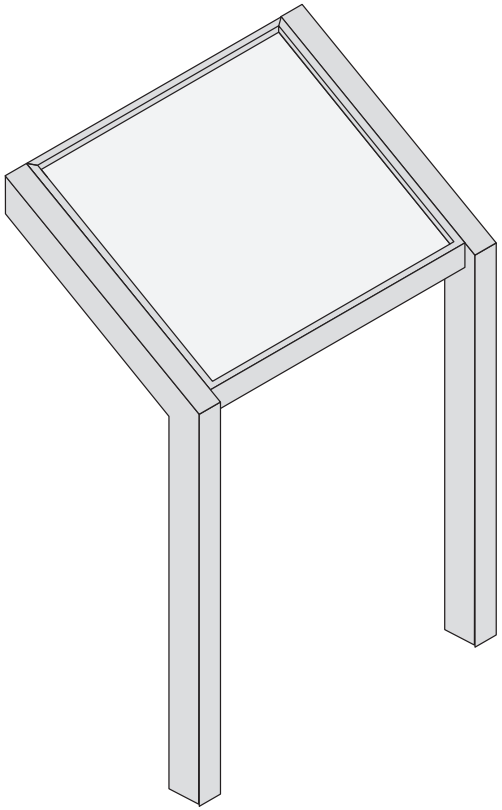

6" Series

Scale: 1/2" = 1'

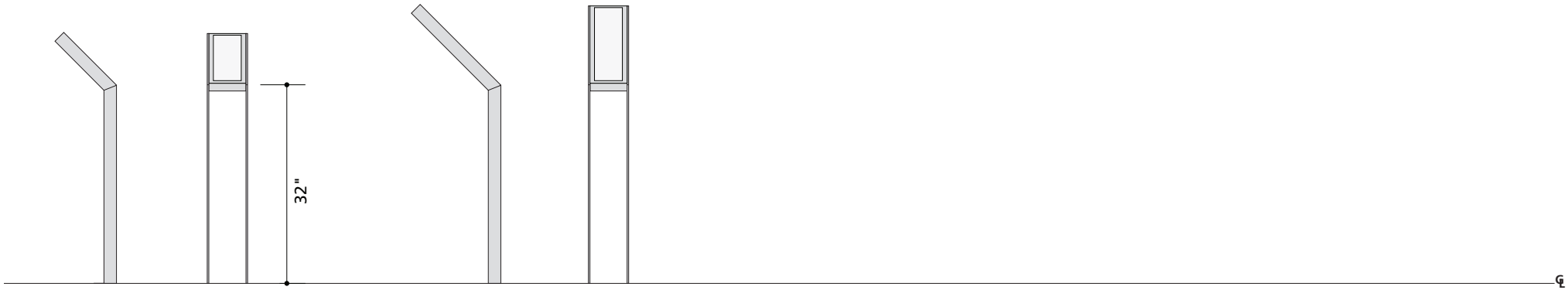

LP-6x12
Barstock Post

LP-6x12
Barstock Post

12" Series

Scale: 1/2" = 1'

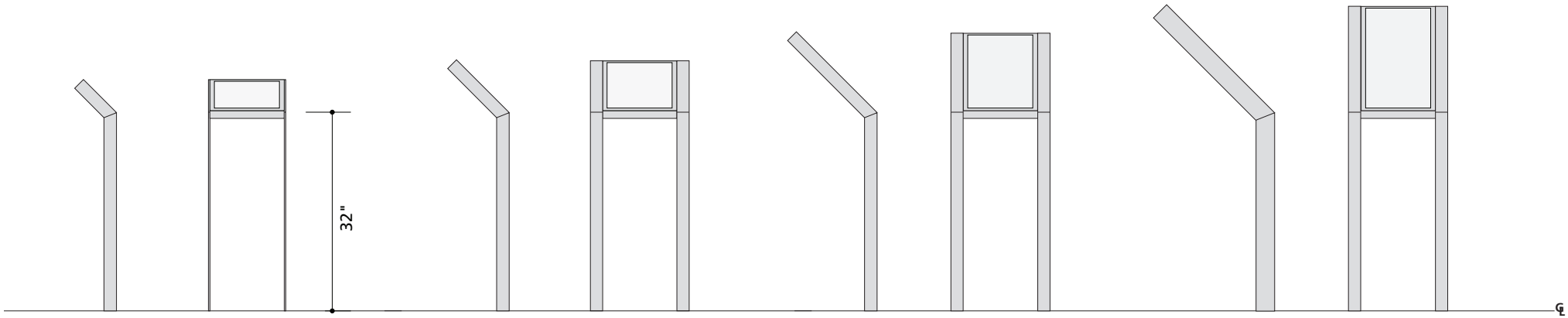

LP-12x6
Barstock Post

LP-12x12
Barstock Post
2x2 Post

LP-12x18
2x2 Post

LP-12x24
2x3 Post

18" Series

Scale: 1/2" = 1'

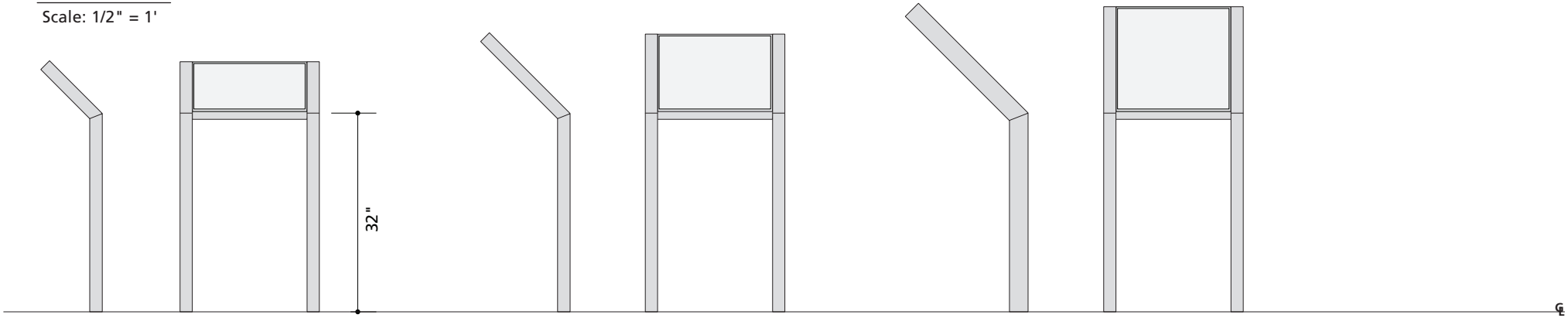

LP-18x12
2x2 Post

LP-18x18
2x2 Post
2x3 Post

LP-18x24
2x3 Post

24" Series

Scale: 1/2" = 1'

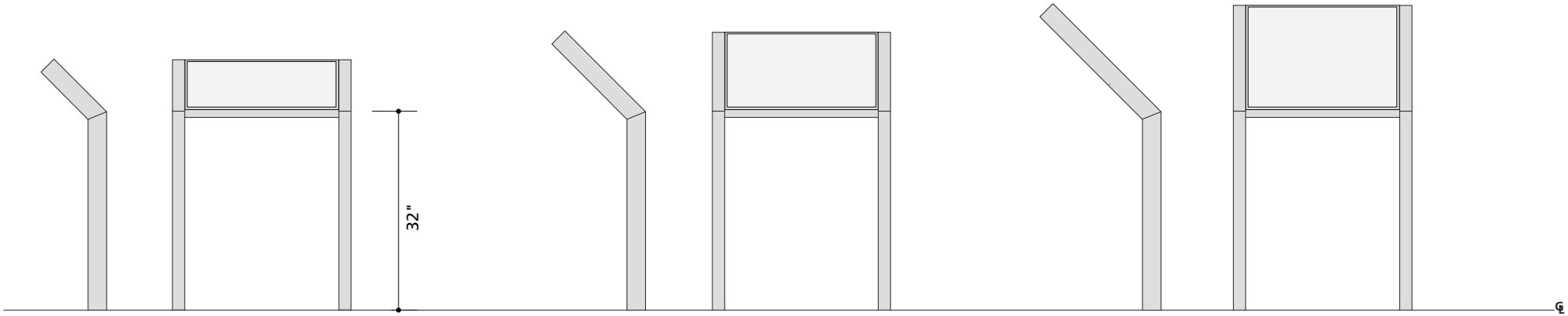

LP-24x12
2x2 Post
2x3 Post

LP-24x18
2x3 Post

LP-24x24
2x3 Post

36" Series

Scale: 1/2" = 1'

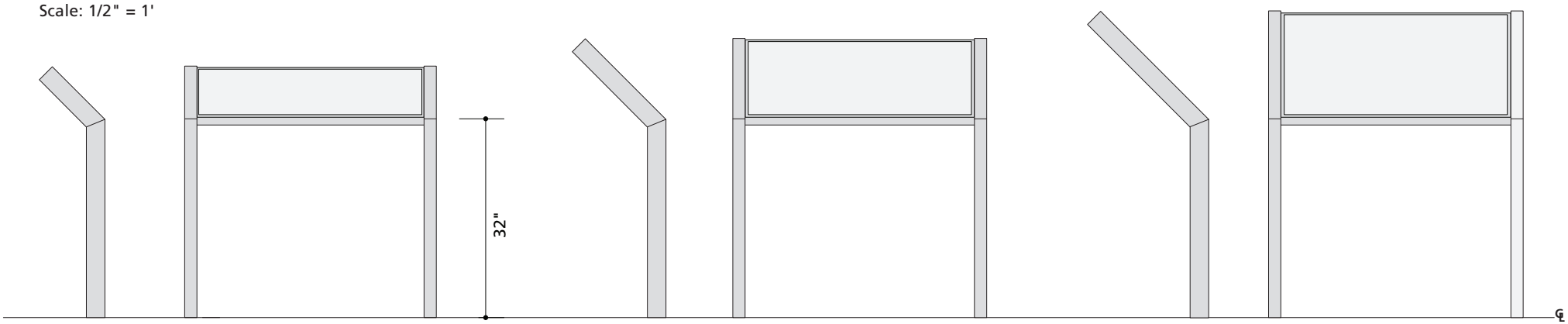

LP-36x12
2x3 Post

LP-36x18
2x3 Post

LP-36x24
2x3 Post

48" Series

Scale: 1/2" = 1'

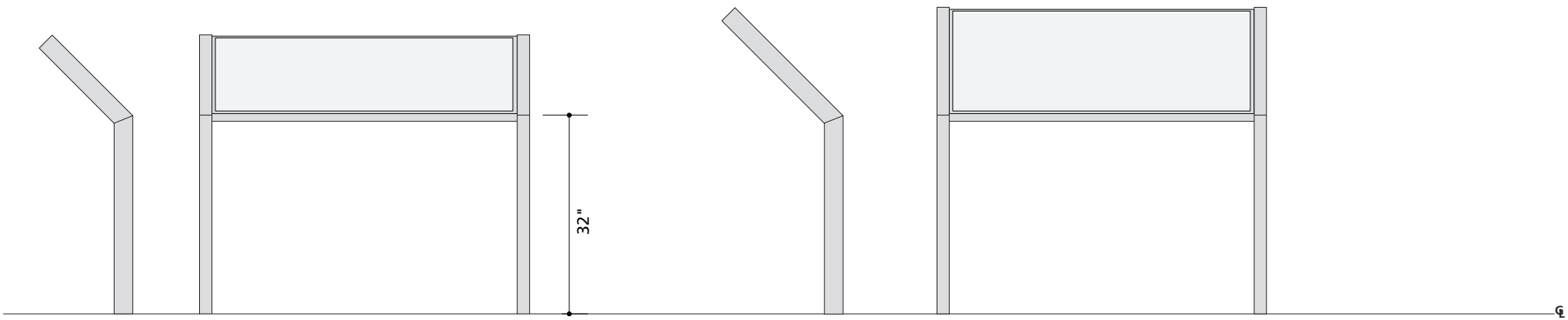

LP-48x18
2x3 Post

LP-48x24
2x3 Post

Section IV

Upright Series Architecture (UP)

Upright Series Overview (UP) 32

Upright Base Sizes 33

- 6" Series
- 12" Series
- 18" Series
- 24" Series
- 36" Series
- 48" Series

Upright Inline 2 Series Overview (UPN2) 37

Upright Inline 2 Base Sizes 38

- 24" Series
- 36" Series

Upright Inline 3 Series Overview (UPN3) 39

Upright Inline 3 Base Sizes 40

- 24" Series
- 36" Series

Upright Tri-Sided Series Overview (UPTR) 41

Upright Tri-Sided Base Sizes 42

- 24" Series
- 36" Series

Upright Quad-Sided Series Overview (UPQU) 43

Upright Quad-Sided Base Sizes 44

- 24" Series
- 36" Series

Upright Roof Overview 45

Upright Roof Sizes 46

- Upright Series
- Upright Inline 2 Series
- Upright Inline 3 Series
- Upright Tri Series
- UprightQuad Series

Upright Series Overview (UP)

NPS "upright" bases—which are designed to stand vertically so they attract attention—typically present more general information than the interpretive messages their "low–profile" counterparts offer. Upright bases are typically used at trailheads or boat ramps, near visitor centers, in parking areas or campgrounds, and at similar points of assembly or access. Bases are available in two materials, appropriate to a variety of landscapes: weathering steel for natural environments and aluminum (in three standard colors or hand-sanded) for urban and coastal areas. The legs of most upright bases are directly embedded into the ground, although other mounting methods are available to accommodate site conditions. As illustrated on the following pages, NPS upright bases come in a wide range of panel sizes which are held within a full–frame assembly. The top frame member is secured by a replaceable set screw which can be easily removed to allow panel replacement.

This illustration shows a single exhibit panel. (Note: The single panel shown here can be "double–sided" in order to have two display surfaces.) The Upright Series hardware can also support a bulletin case or other accessories (on one or both sides) as illustrated elsewhere in this manual.

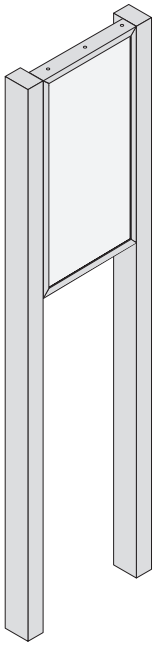

6" Series

Scale: 1/2" = 1'

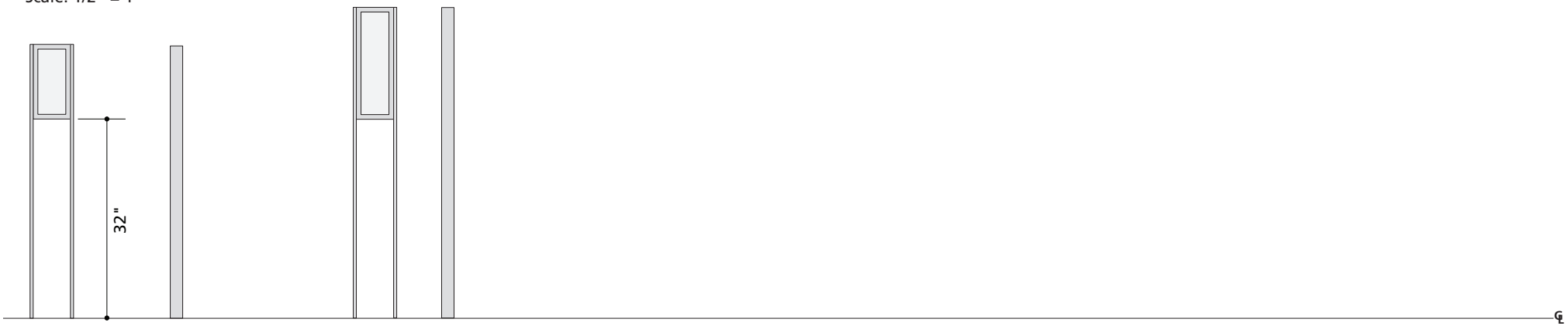

UP-6x12
Barstock Post

UP-6x18
Barstock Post

12" Series

Scale: 1/2" = 1'

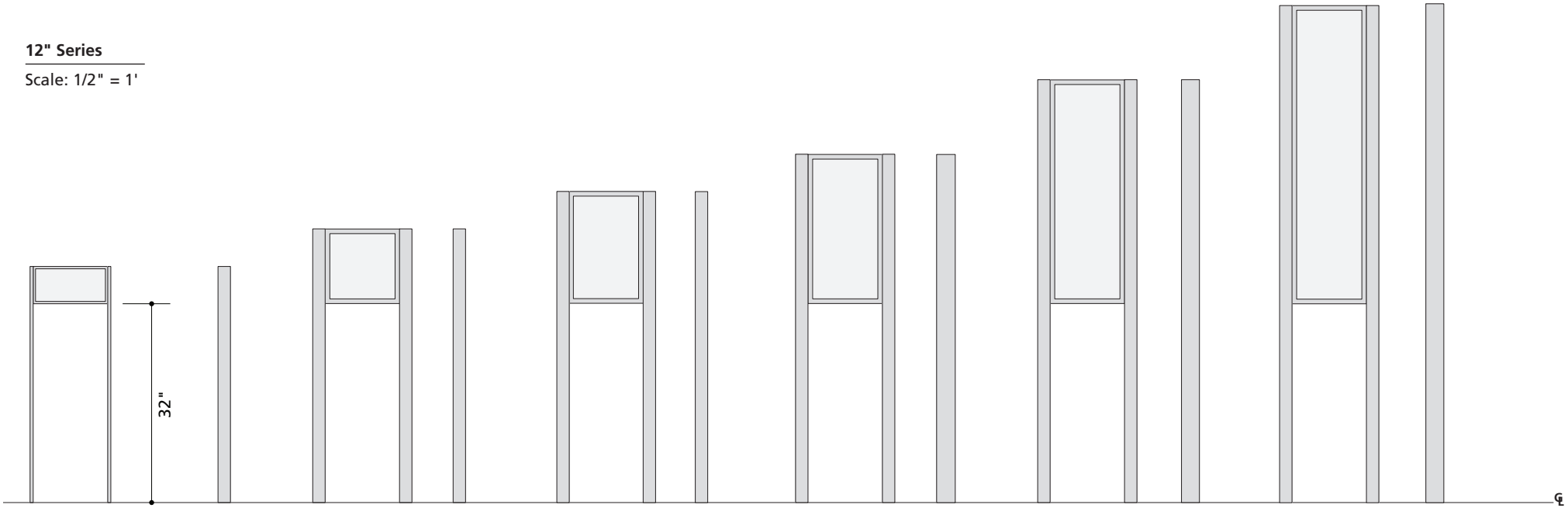

UP-12x6
Barstock Post

UP-12x12
Barstock Post or
2x2 Post

UP-12x18
2x2 Post

UP-12x24
2x2 Post
2x3 Post

UP-12x36
2x3 Post

UP-12x48
2x3 Post

18" Series

Scale: 1/2" = 1'

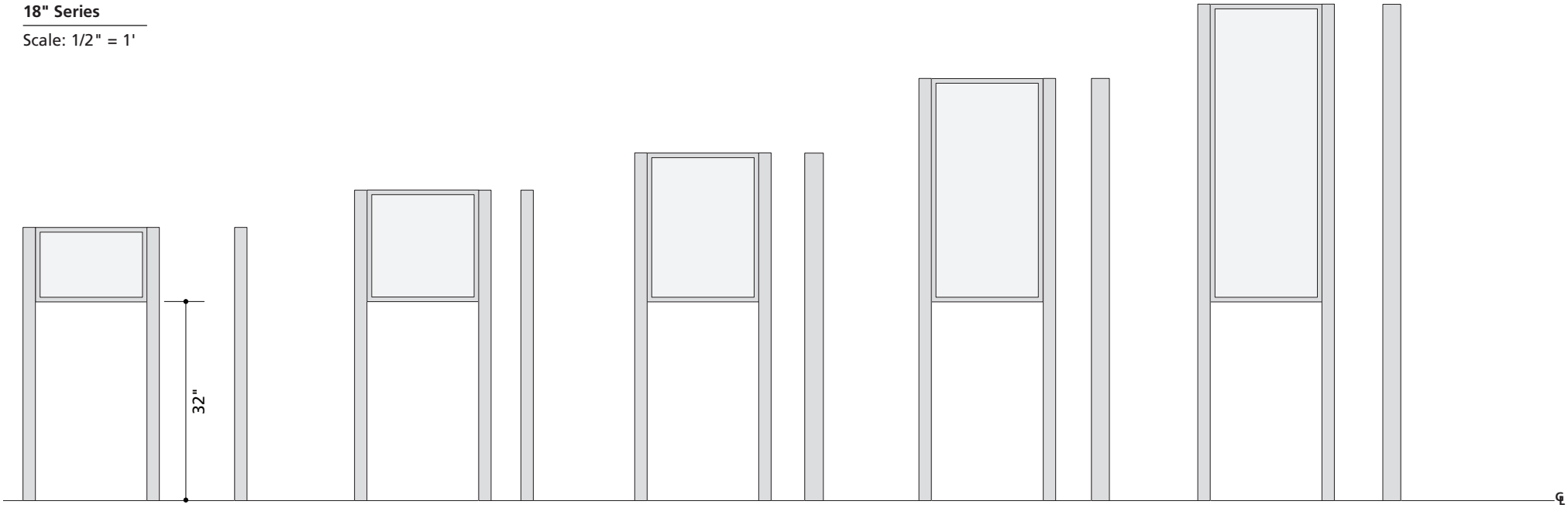

UP-18x12
2x2 Post

UP-18x18
2x2 Post
2x3 Post

UP-18x24
2x3 Post

UP-18x36
2x3 Post

UP-18x48
2x3 Post

24" Series

Scale: 1/2" = 1'

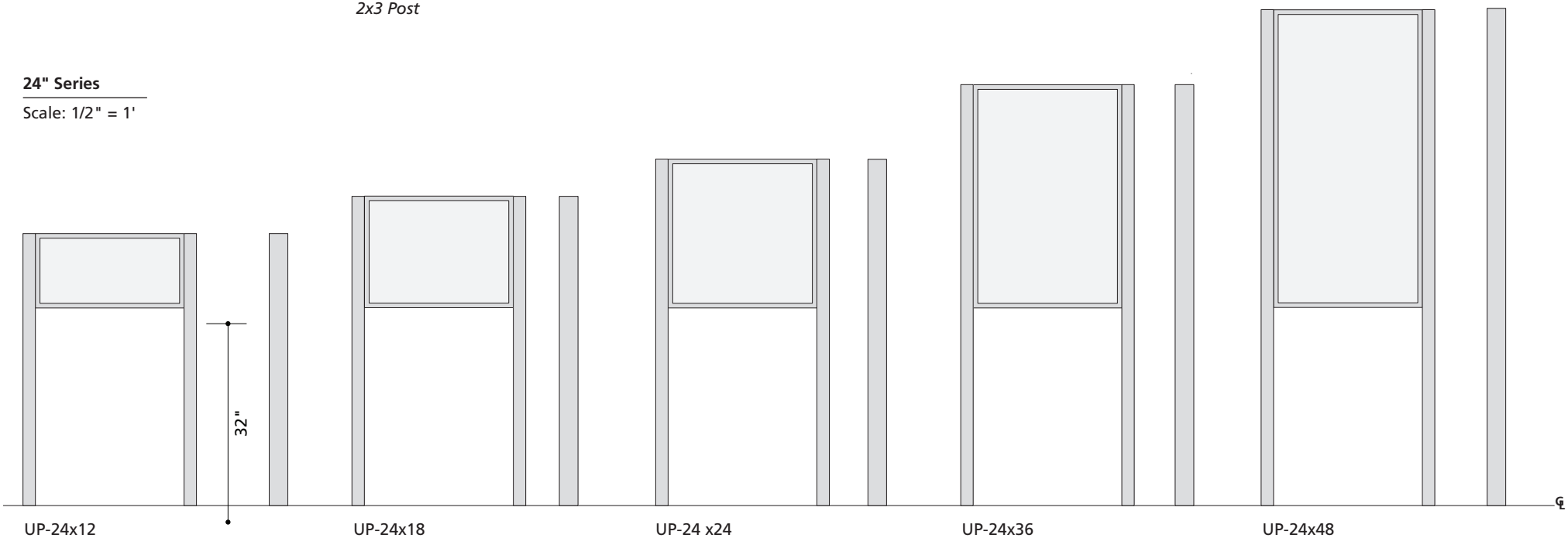

UP-24x12
2x2 Post
2x3 Post

UP-24x18
2x3 Post

UP-24 x24
2x3 Post

UP-24x36
2x3 Post

UP-24x48
2x3 Post

36" Series

Scale: 1/2" = 1'

UP-36x12
2x3 Post

UP-36x18
2x3 Post

UP-36x24
2x3 Post

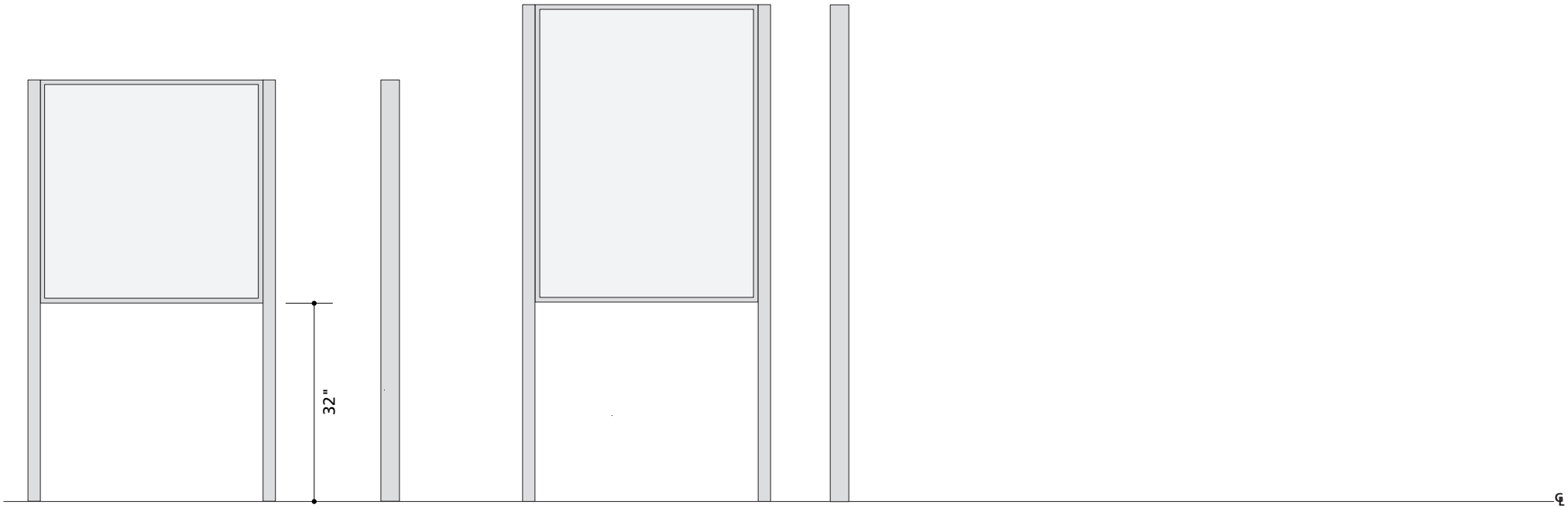

UP-36x36
2x3 Post

UP-36x48
2x3 Post

48" Series

Scale: 1/2" = 1'

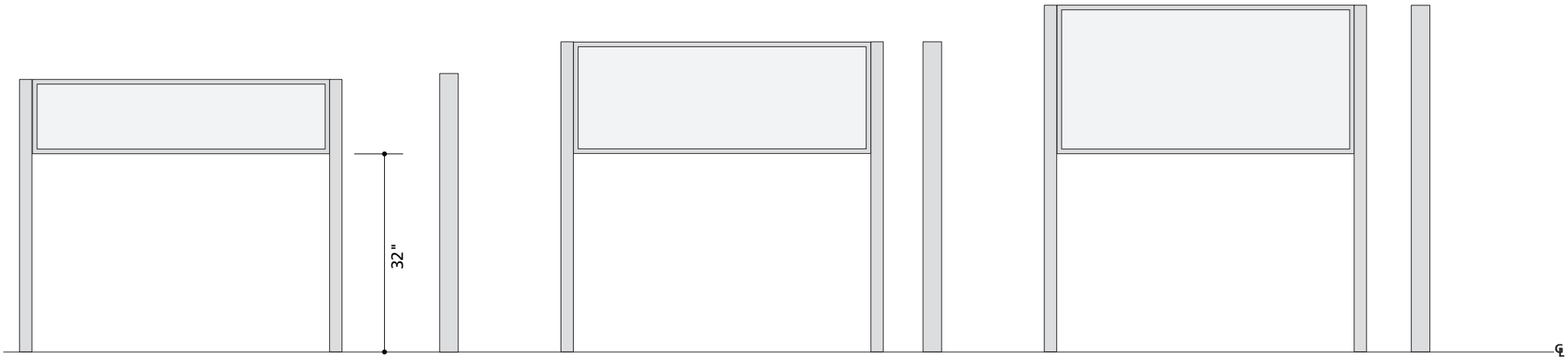

UP-48x12
2x3 Post

UP-48x18
2x3 Post

UP-48x24
2x3 Post

Upright Inline 2 Series Overview (UPN2)

When more information needs to be displayed than a single exhibit can accommodate, two upright panels can be used. The material and color options for this configuration are the same as those available for the single panel assembly presented on page 31.

The Inline 2 Series hardware can support a bulletin case or other accessories in additionto exhibit panels. Both sides of the assembly can carry panels or accessories.

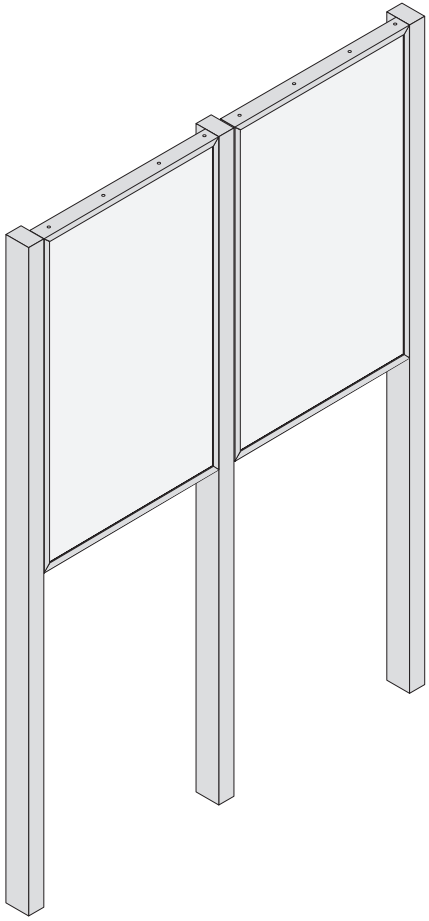

24" Series

Scale: 1/2" = 1'

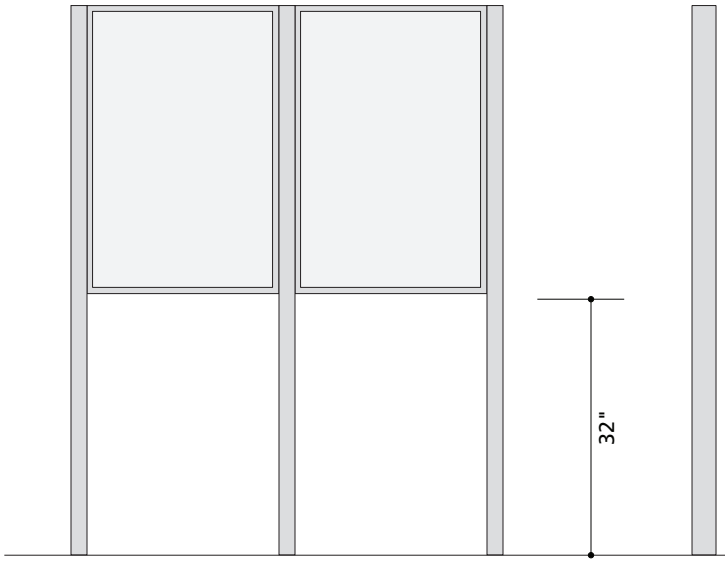

UPN2-24x36
2x3 Posts

36" Series

Scale: 1/2" = 1'

UPN2-36x48
3x5 Posts

Upright Inline 3 Series Overview (UPN3)

When more information needs to be displayed than one or two exhibits can accommodate, three upright panels can be used. The material and color options for this configuration are the same as those available for the single panel assembly presented on page 31.

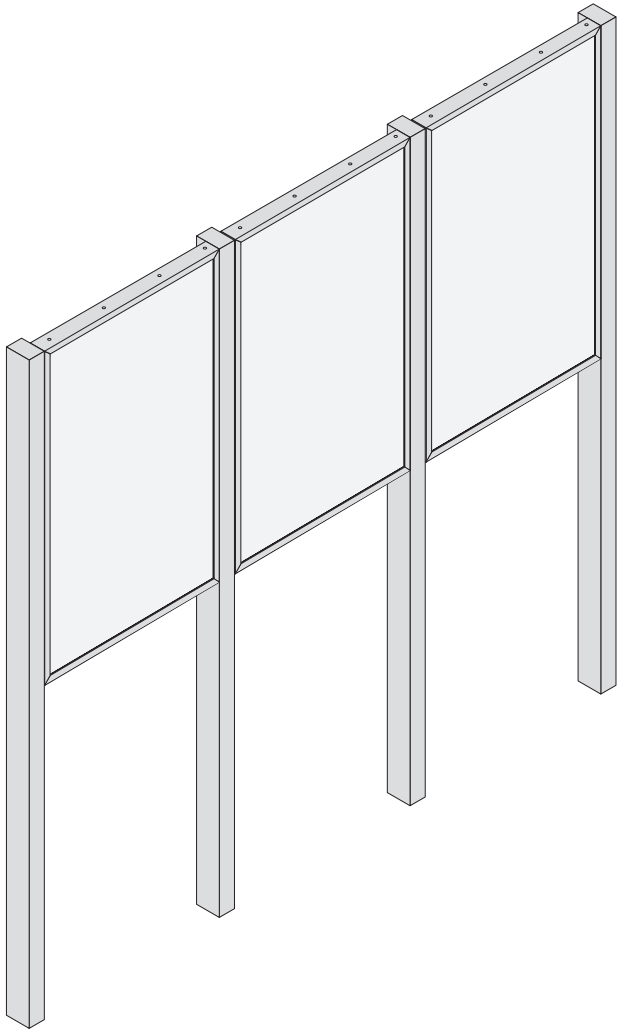

The Inline 3 Series hardware can support a bulletin case or other accessories in addition to exhibit panels. Both sides of the assembly can carry panels or accessories.

36" Series

Scale: 1/2" = 1'

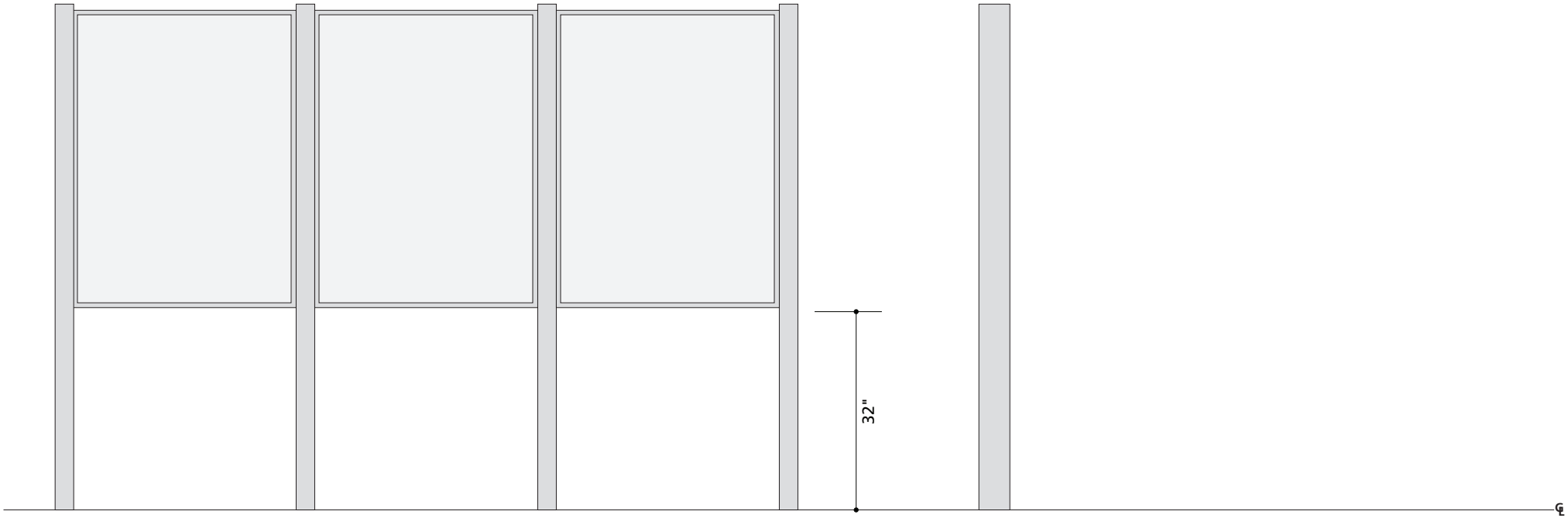

UPN3-36x48
3x5 Posts

Upright Tri-Side Series Overview (UPTR)

Upright structures can be configured in a tri-sided arrangement. The Tri-Sided Series can support exhibit panels, bulletin cases and other accessories. The Upright Tri Series, like all NPS hardware, is typically embedded directly into the ground, although other mounting methods are available to accommodate site conditions. The Tri-Sided Series is available in aluminum and weathering steel.

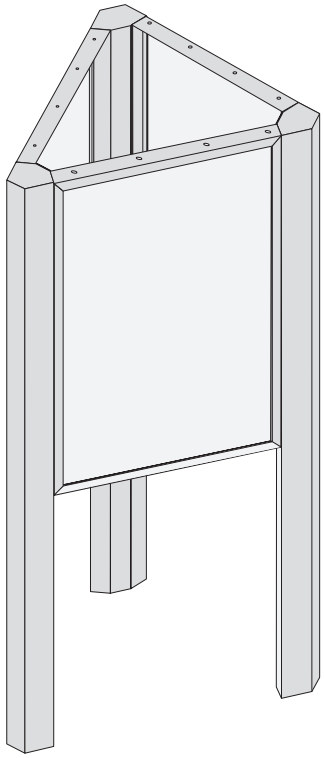

24" Series

Scale: 1/2" = 1'

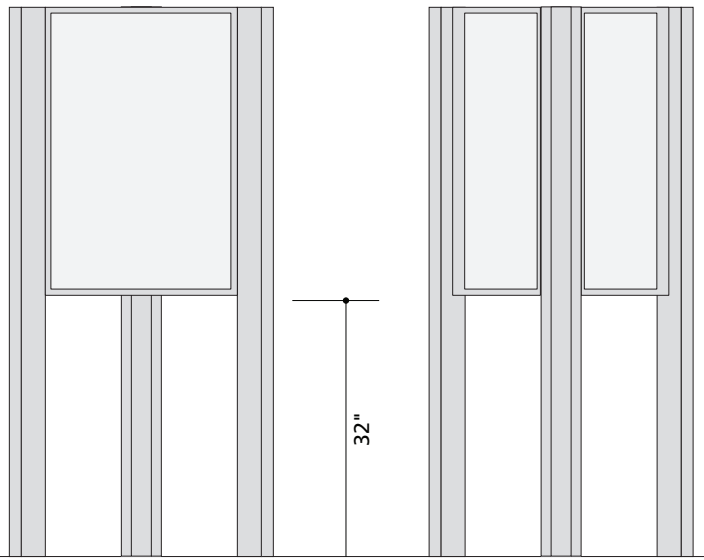

UPTR-24x36
Custom Posts

36" Series

Scale: 1/2" = 1'

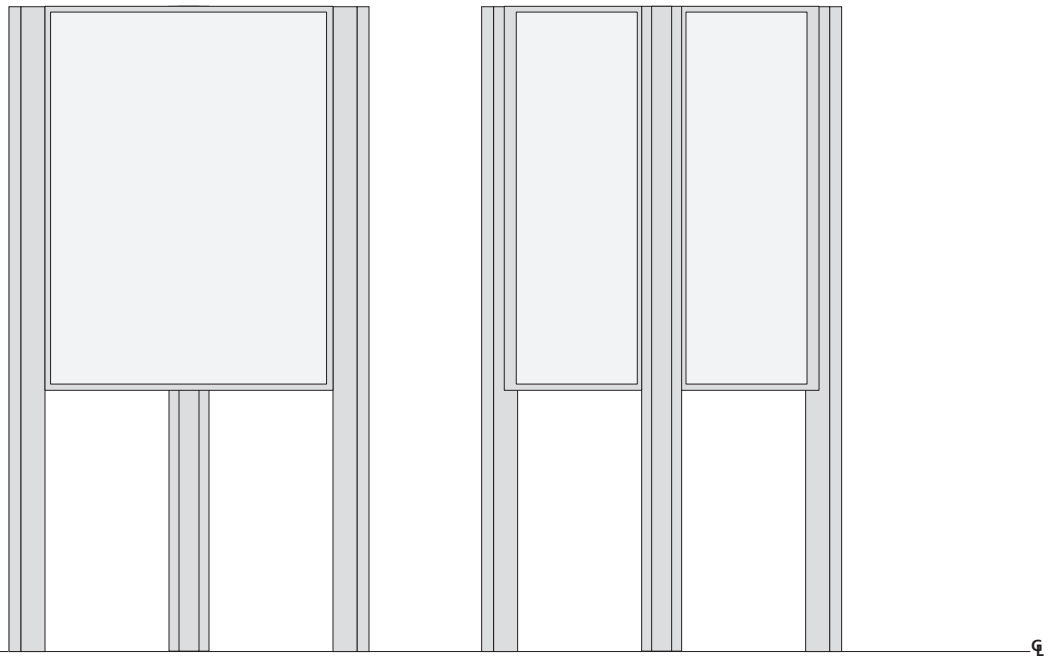

UPTR-36x48
Custom Posts

Upright Quad-Sided Series Overview (UPQU)

Upright structures can be configured in a four-sided arrangement. The Quad-Sided Series can support exhibit panels, bulletin cases and other accessories in addition to exhibit panels. The Quad Series, like all NPS hardware, is typically embedded directly into the ground, although other mounting methods are available to accommodate site conditions. The Quad-Sided Series is available in aluminum and weathering steel.

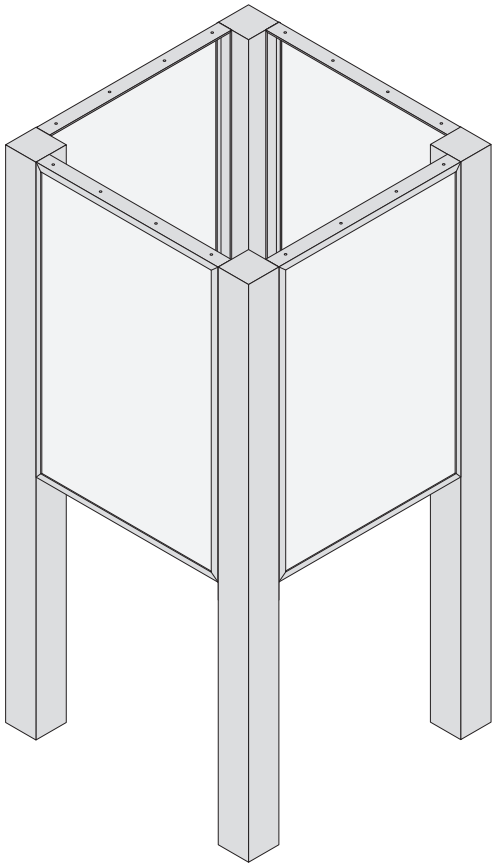

24" Series

Scale: 1/2" = 1'

36" Series

Scale: 1/2" = 1'

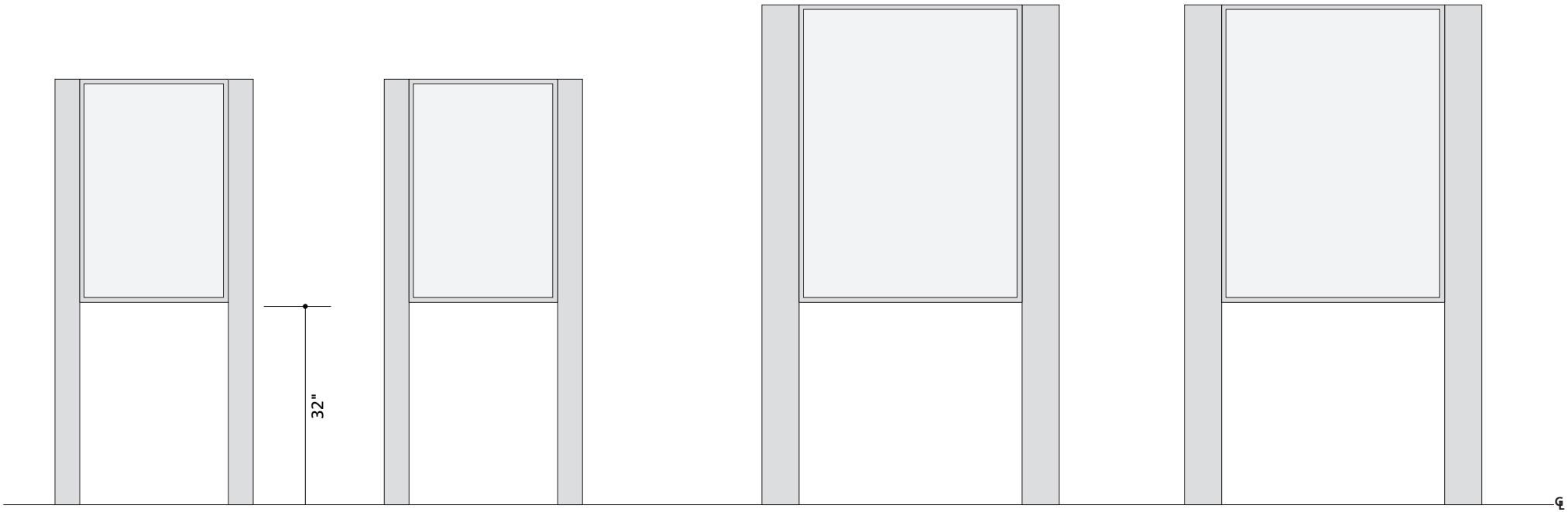

UPQU-24x36
4x4 Posts

UPQU-36x48
6x6 Posts

Upright Roof Overview

Single, inline, tri, or quad upright exhibits (in 36 x 48 panel sizes only) can include a roof structure to protect panels, bulletin cases, and other accessories, and to provide shade for park visitors. Inline assemblies are typically delivered with the roof substructure (as shown below) but without roof surface materials, which are obtained and applied by the park. However, the Tri and the Quad Series can be ordered with an aluminum roof (also see below) finished to match the other parts of the structure. (Note: all roofed structures are currently available only in painted aluminum.)

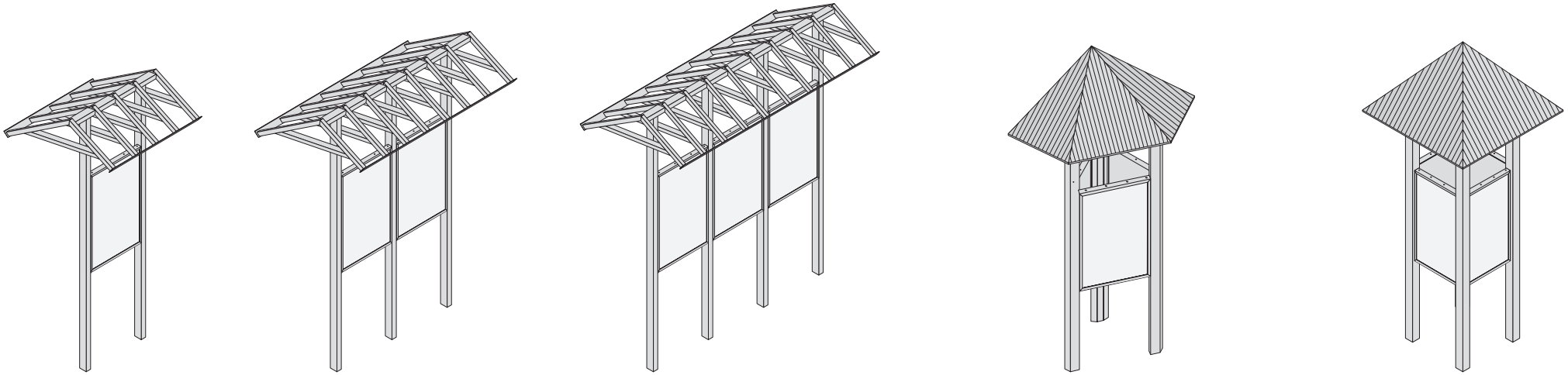

36" Series

Scale: 1/2" = 1'

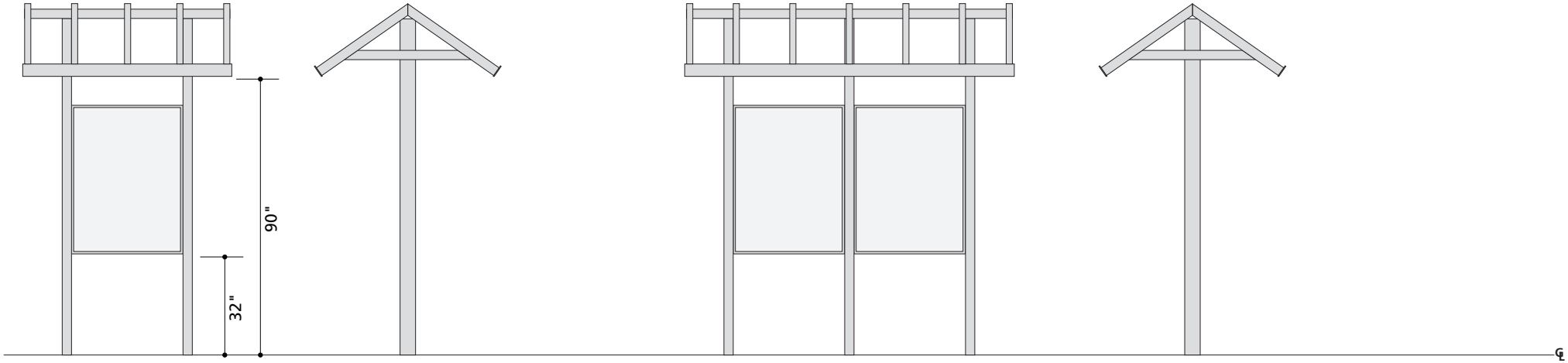

UP-36x48 with Roof
3x5 Post

UPN2-36x48 with Roof
3x5 Post

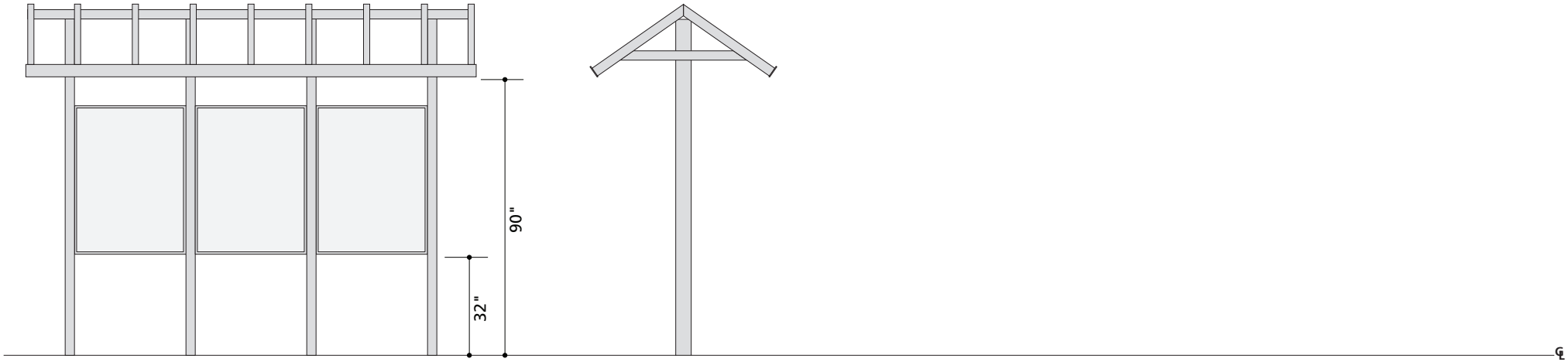

UPN3-36x48 with Roof
3x5 Post

36" Series

Scale: 1/4" = 1'

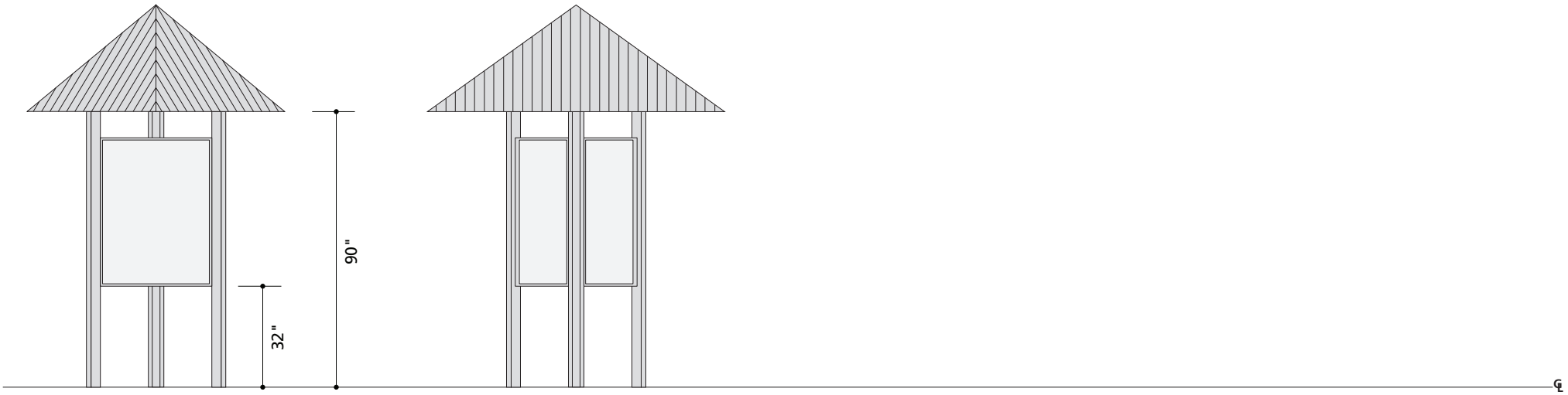

UPTR-36x48 with Roof
Custom Post

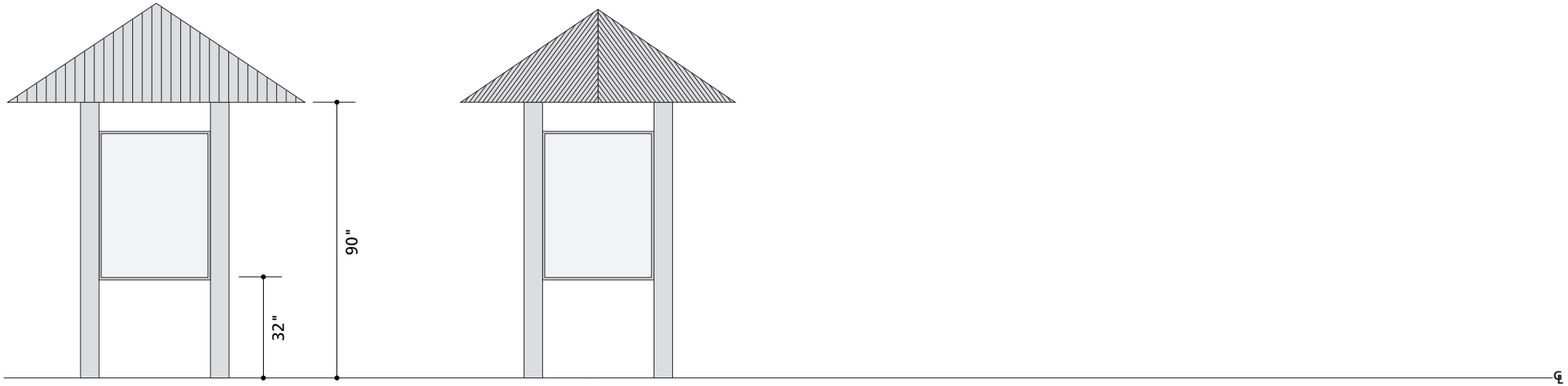

UPQU-36x48 with Roof
6x6 Post

Section V

VIS Hardware Accessories

VIS Hardware Accessory Overview 49

Bulletin Case Overview 51

Bulletin Case Frame Sizes 52

Brochure Holder Overview 53

Miscellaneous Posting Overview 54

VIS Hardware Accessory Overview

The VIS System offers a set of accessories, including a bulletin case as shown below, and holders for brochures or miscellaneous postings as illustrated on the next page.

The bulletin case can be mounted on a wall, or attached to a free–standing vertical base. For more information about the bulletin case see page 51.

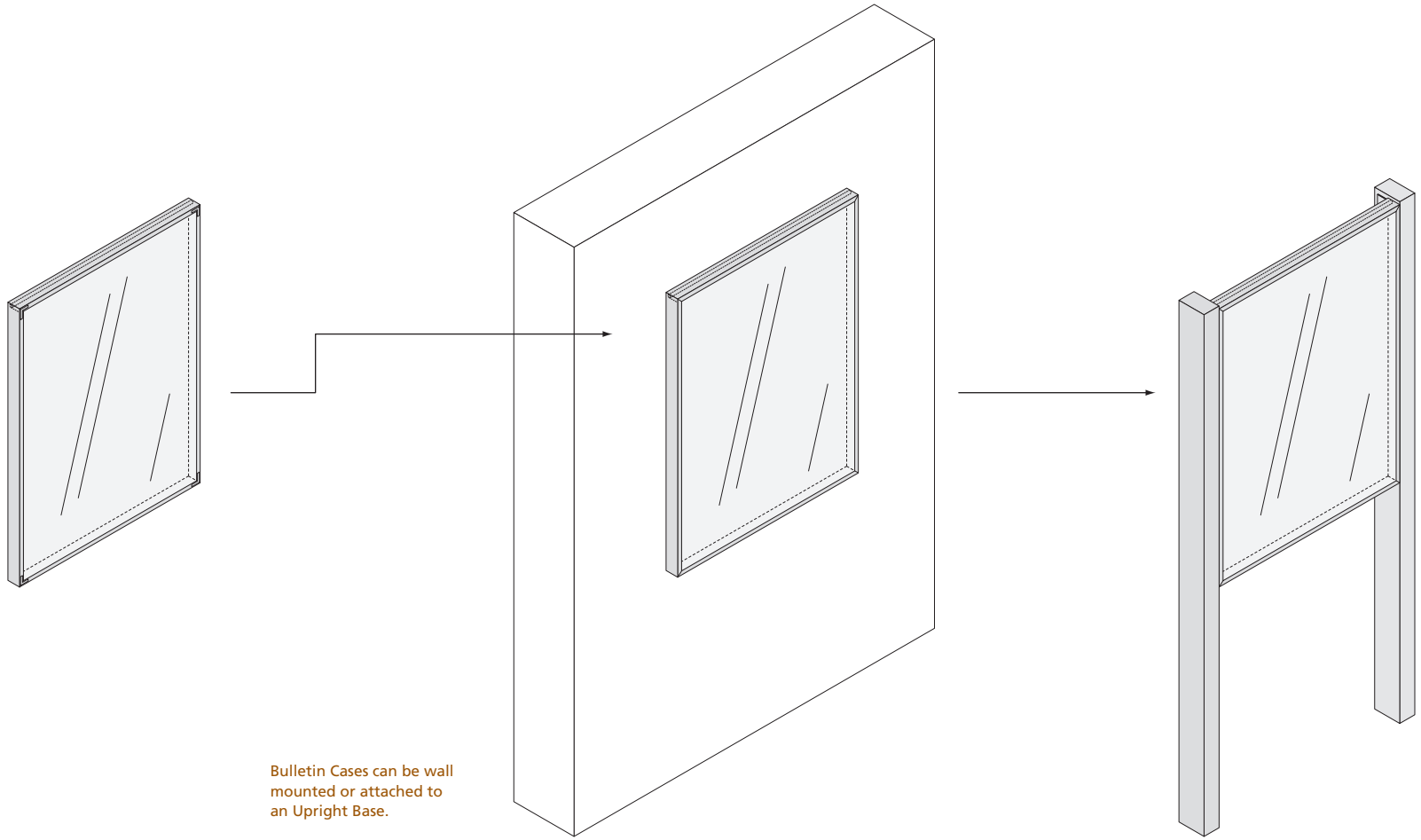

Bulletin Cases can be wall mounted or attached to an Upright Base.

VIS Hardware Accessory Overview - Continued

Upright accessories include a brochure holder and miscellaneous posting.

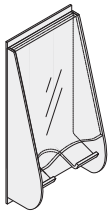

Brochure Holder (BH)

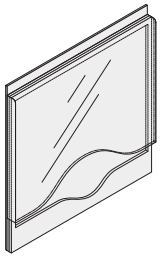

Miscellaneous Posting (MP)

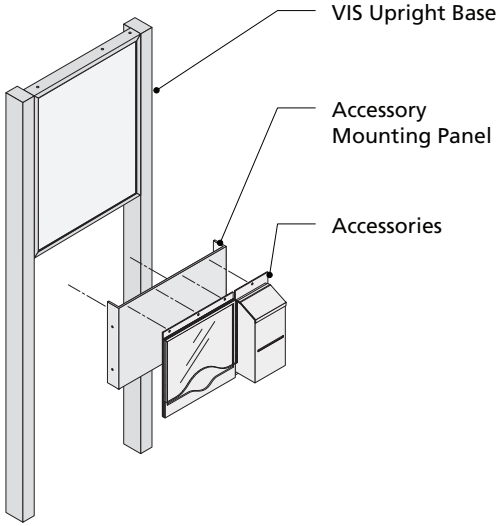

Accessories are attached to an upright base using an accessory mounting panel.

The accessory mounting panel is securely attached to the post legs and each accessory mounts using tamper proof hardware.

Bulletin Case

Visitor information that needs to be posted quickly or changed frequently is best presented in a bulletin case. Designed to be installed on legs or attached directly to a wall, the standard NPS bulletin case features a continuous–hinge door with double locks, 3/16" clear Lexan fronts, and a back panel of powder–coated steel. Information postings are held in place by magnets. The bulletin case is constructed to provide maximum protection from the elements and is ventilated to reduce interior condensation.

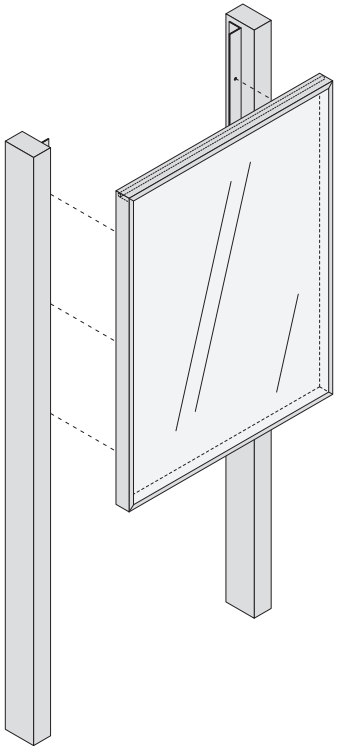

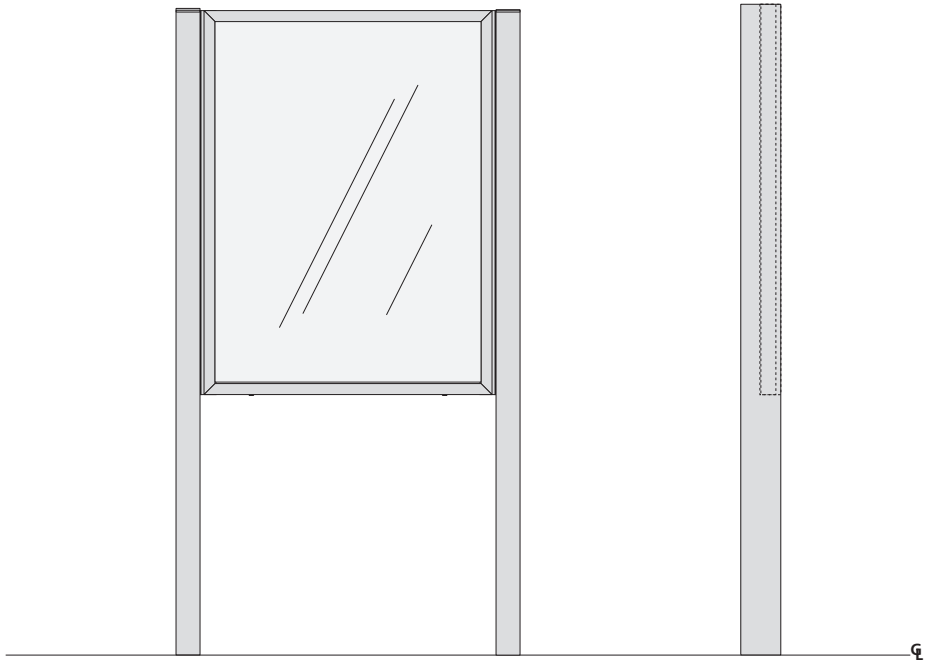

24" Series

Scale: 1/2" = 1'

36" Series

Scale: 1/2" = 1'

48" Series

Scale: 1/2" = 1'

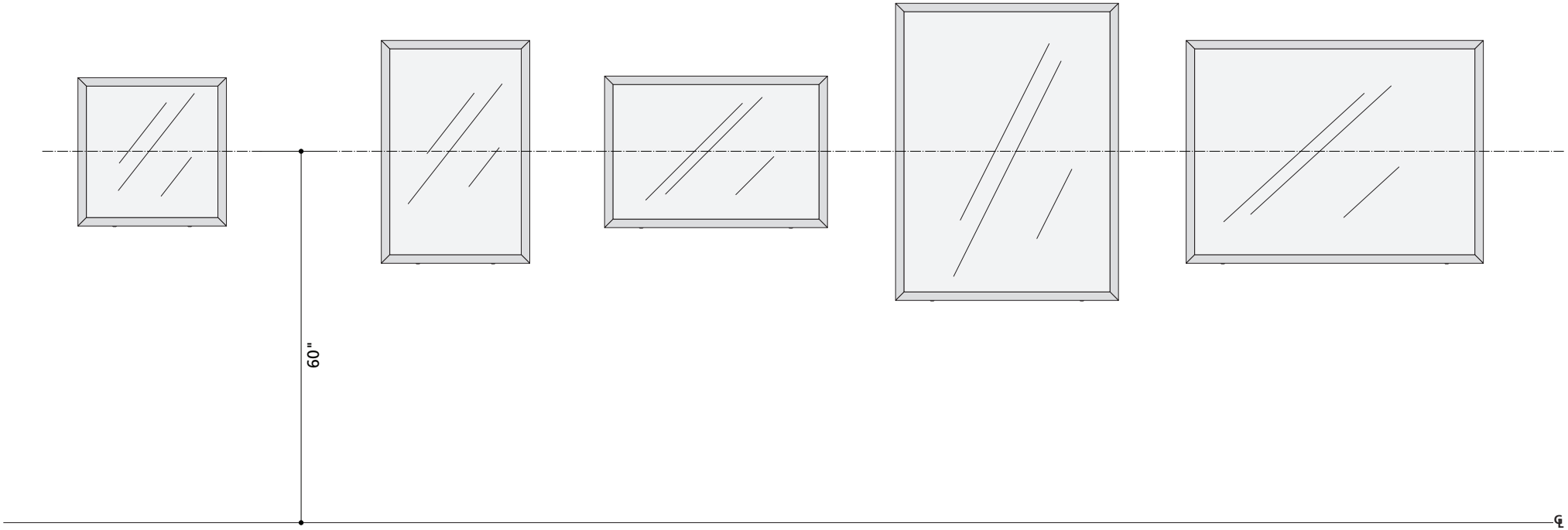

BC-24x24 BC-24x36 BC-36x24 BC-36x48 BC-48x36

Brochure Holder

The standard NPS brochure holder is designed to make official park folders (or trail guides) readily available while providing them with limited protection from the elements. The holder can be used alone to carry between 25 and 40 brochures (depending on their thickness), or can be used in multiples to accommodate more. A clear Lexan cover allows the top brochure to be easily seen by visitors.

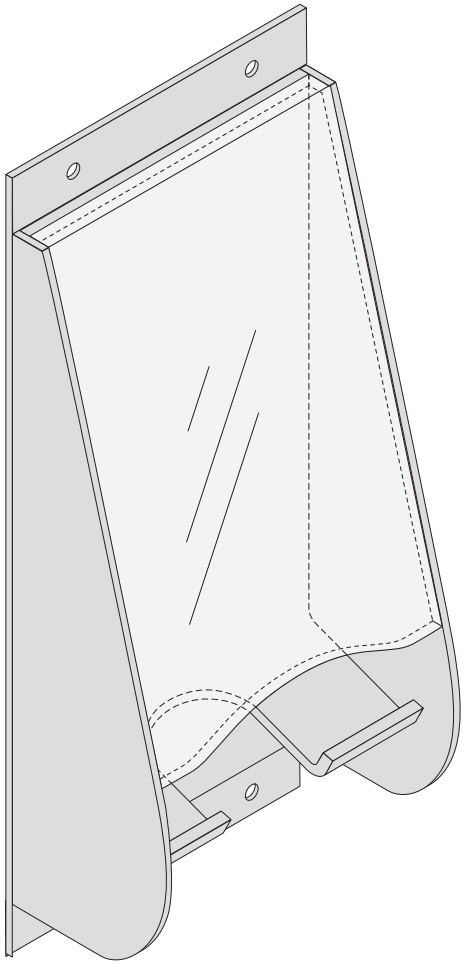

Miscellaneous Posting

Designed to hold an 8.5 x 11 inch sheet, the miscellaneous posting holder allows information to be printed by computer on paper or card stock and easily mounted for viewing. The Lexan cover provides limited protection from the elements, allowing posting to be displayed for weeks or longer. Such postings could include schedules that change periodically, timely information about closures or emergencies, or other messages that need to be displayed quickly.

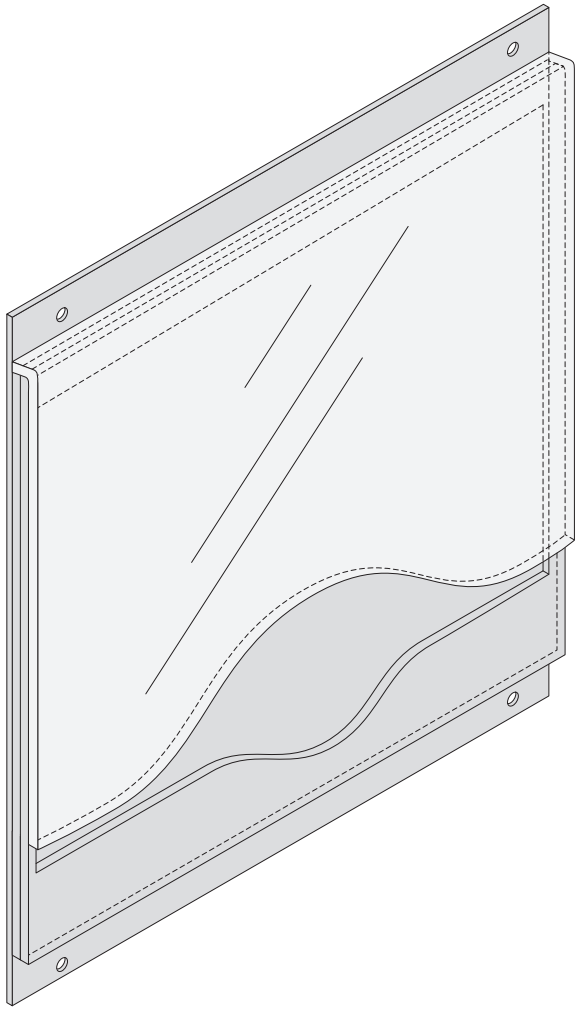

Notice

These specifications are provided as guidelines for the fabrication, assembly, and installation of VIS signs and wayside exhibits.

Additional instructions and requirements including modifications to structures and details may be provided within individual contracts.

Fabricators may propose and the NPS may approve deviations to the construction of VIS bases.

Section VI

VIS Fabrication Detail Drawings

Trailside (TS)	56
Wall Mount (WM)	60
Low Profile (LP)	65
Upright Series (UP)	78
Upright Inline 2 Series (UPN2)	107
Upright Inline 3 Series (UPN3)	114
Upright Tri Sided Series (UPTR)	123
Upright Quad Series (UPQU)	135
Bulletin Case with Posts (BC)	148
Bulletin Case Wall Mount (BC)	151
Brochure Holder (BH)	154
Miscellaneous Posting (MP)	156
Accessory Add-On Panel	158
Installation Options	161
Reference Charts	175

Trailside (TS)

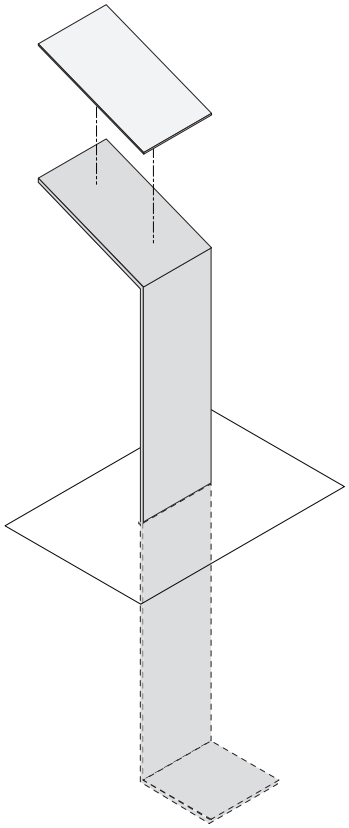

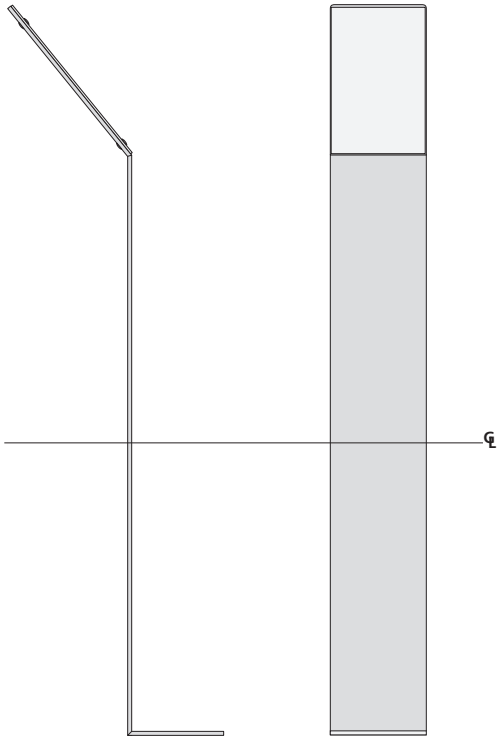

Trailside (TS)

Steel and Aluminum Fabrication

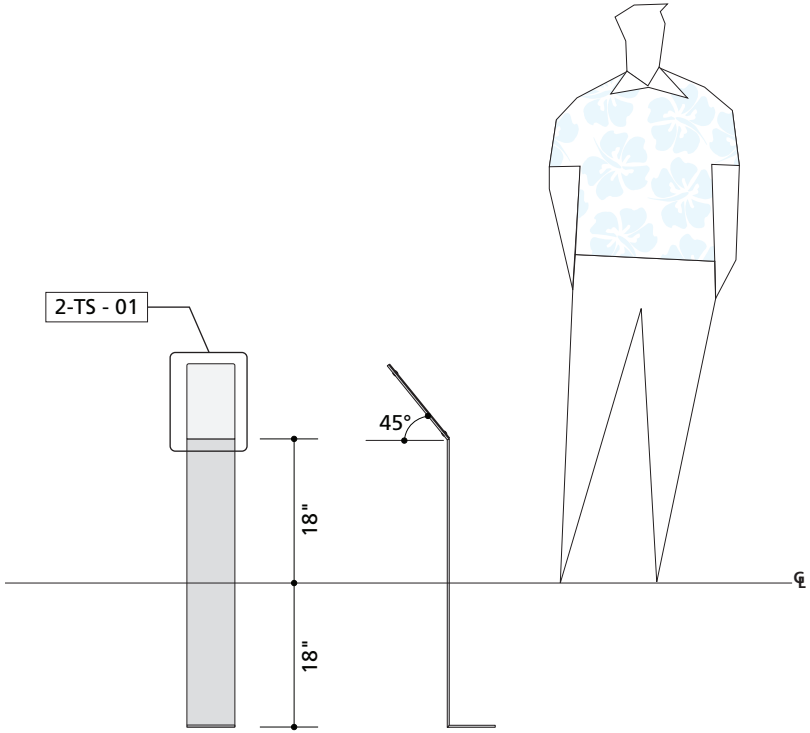

1-TS - 01 Trail Side Front and Side Elevation

Scale: 1/2" = 1' - 0"

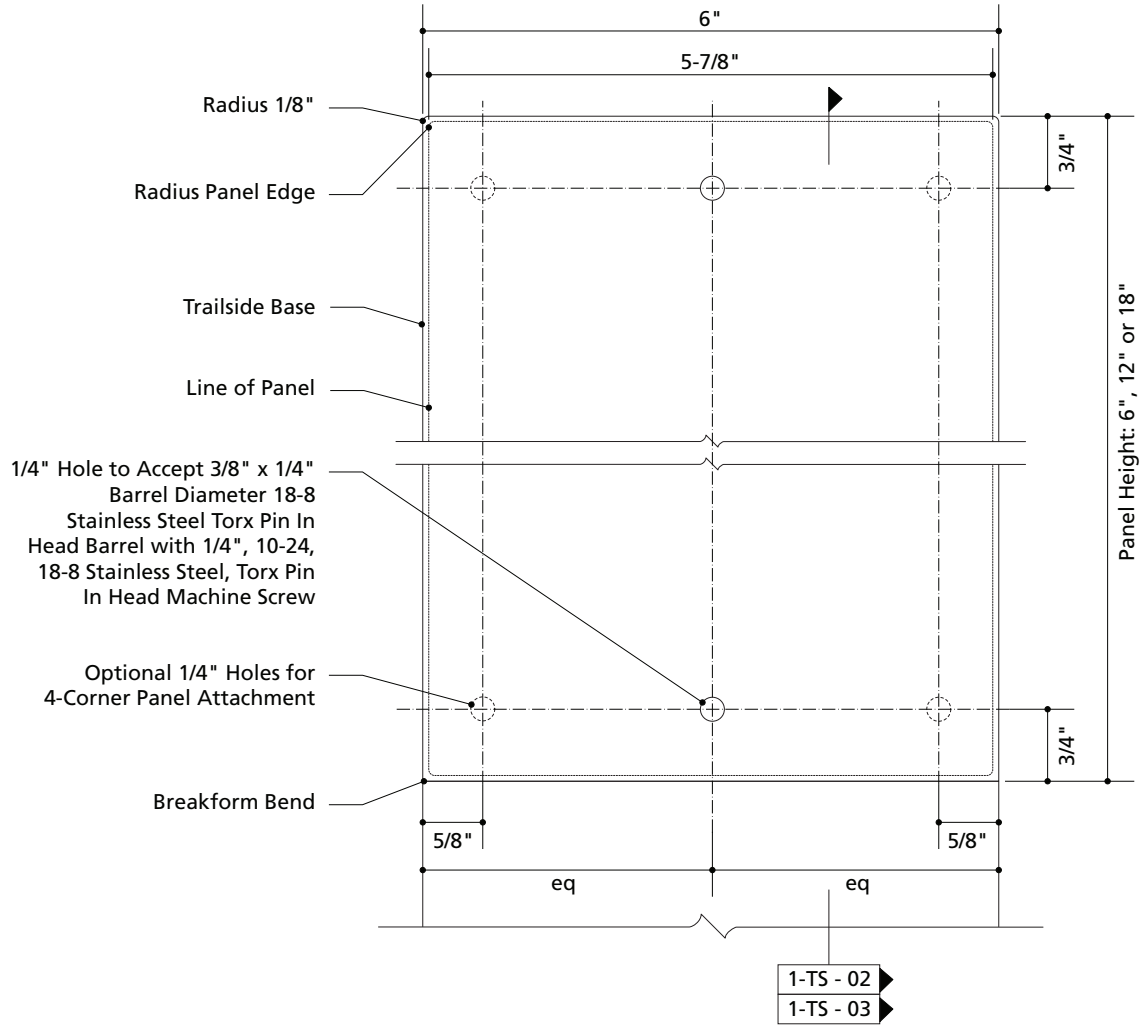

2-TS - 01 Panel Attachment Detail

TS - 01

Trailside (TS)

Steel Fabrication

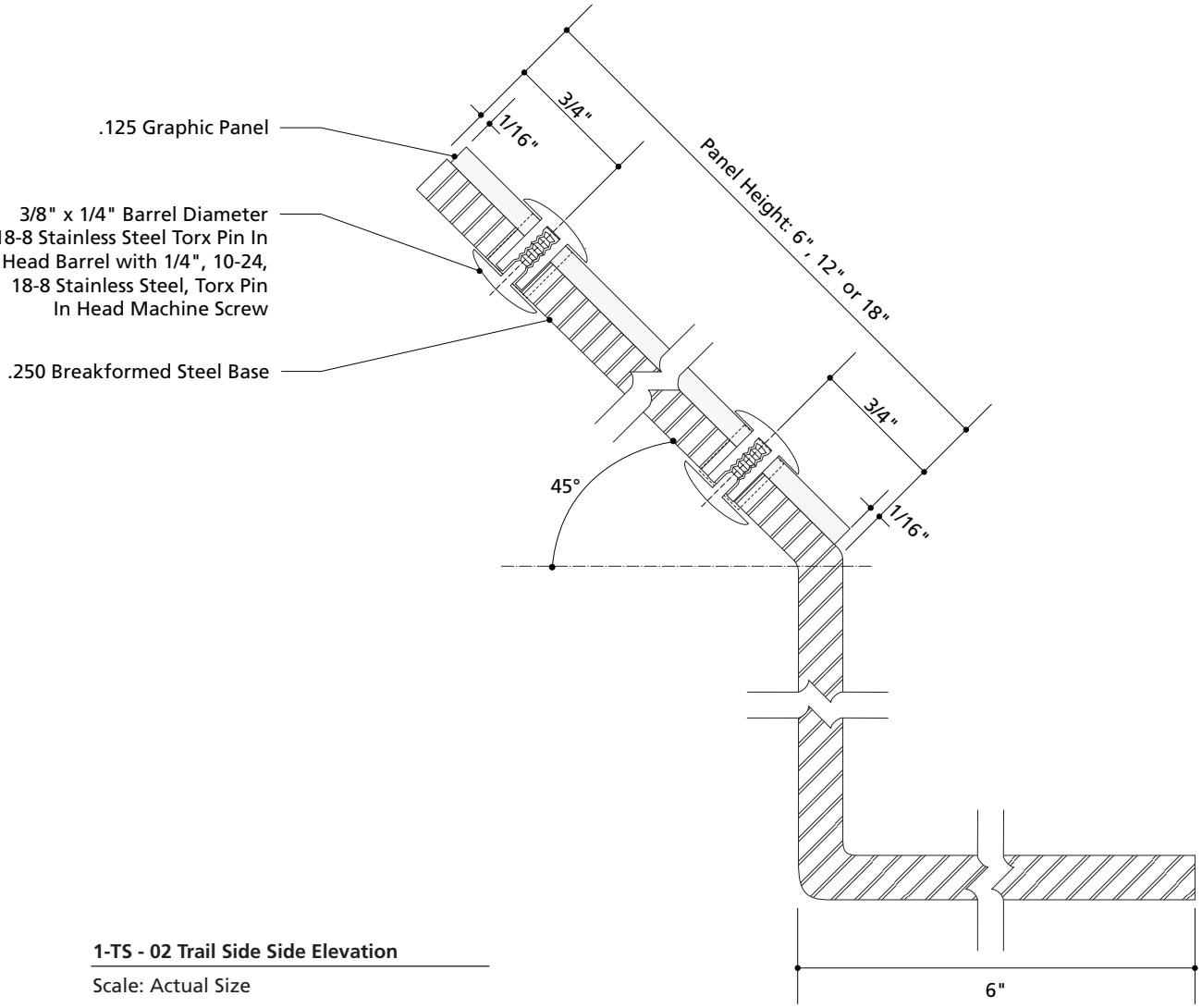

1-TS - 02 Trail Side Side Elevation

Scale: Actual Size

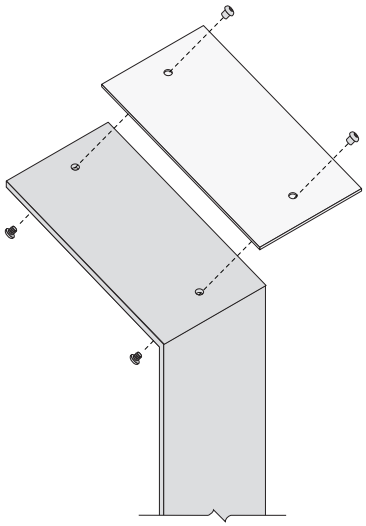

2-TS - 02 Connection Detail

Scale: 1-1/2" = 1' - 0"

TS - 02

Trailside (TS)

Aluminum Fabrication

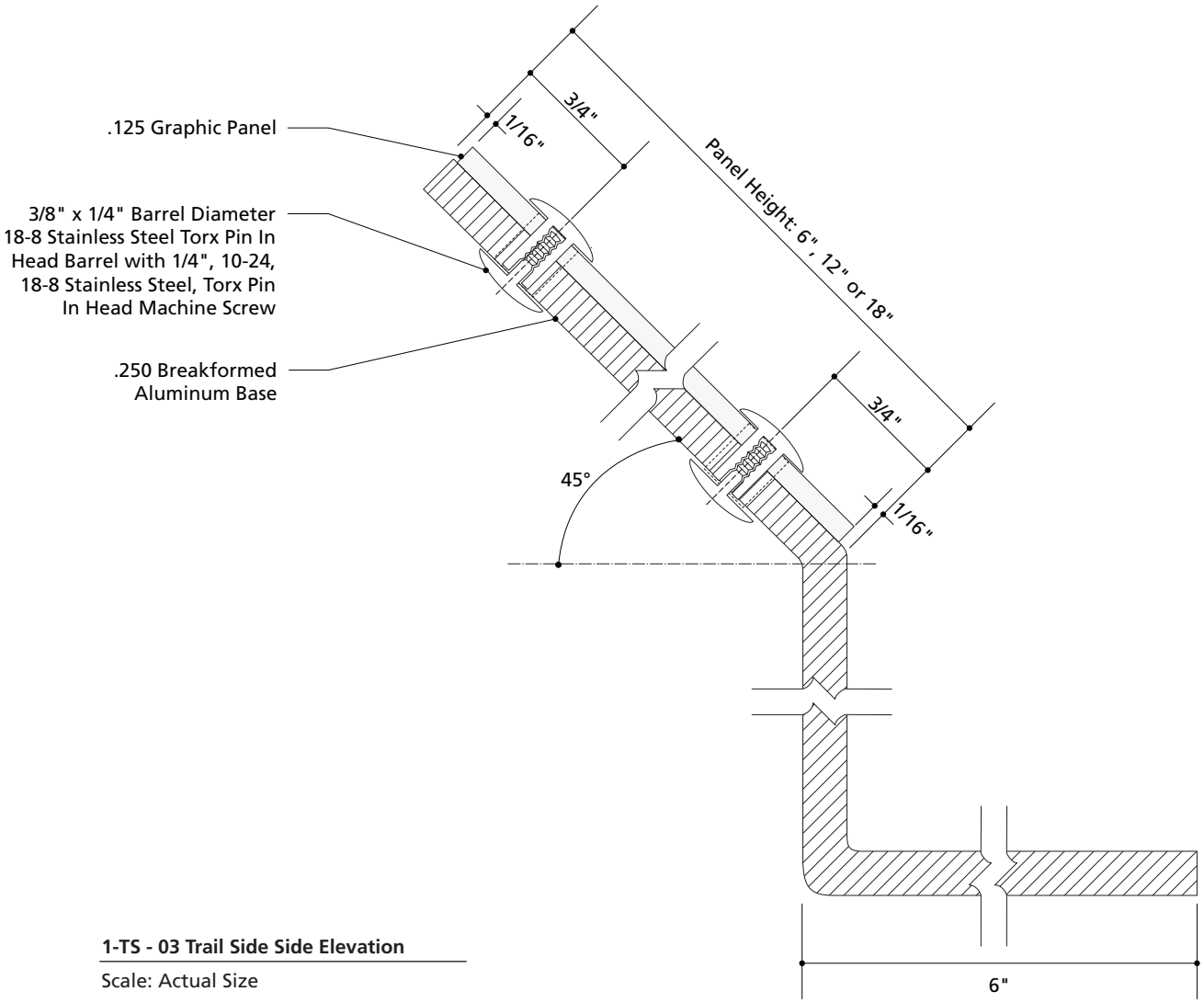

1-TS - 03 Trail Side Side Elevation

Scale: Actual Size

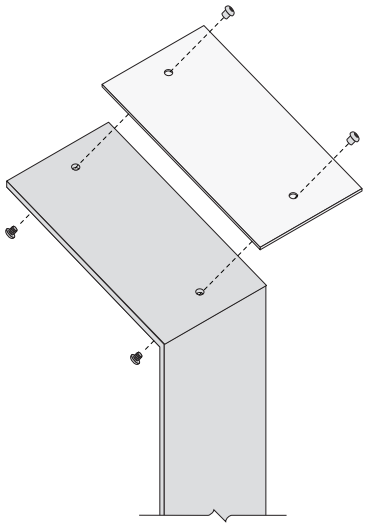

2-TS - 03 Connection Detail

Scale: 1-1/2" = 1"-0"

TS - 03

Wall Mount (WM)

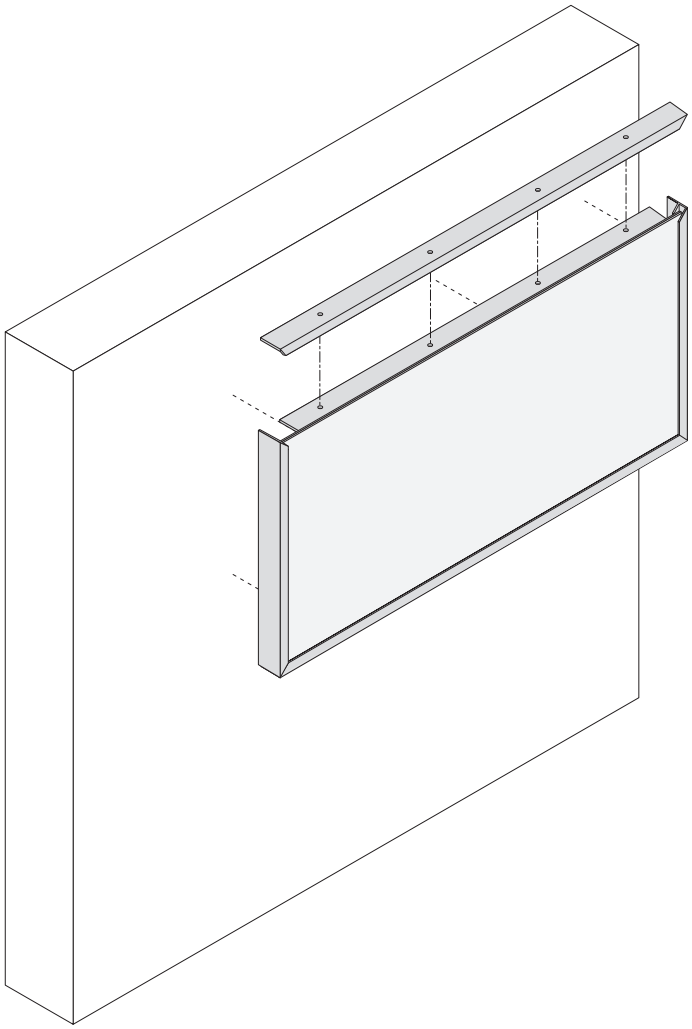

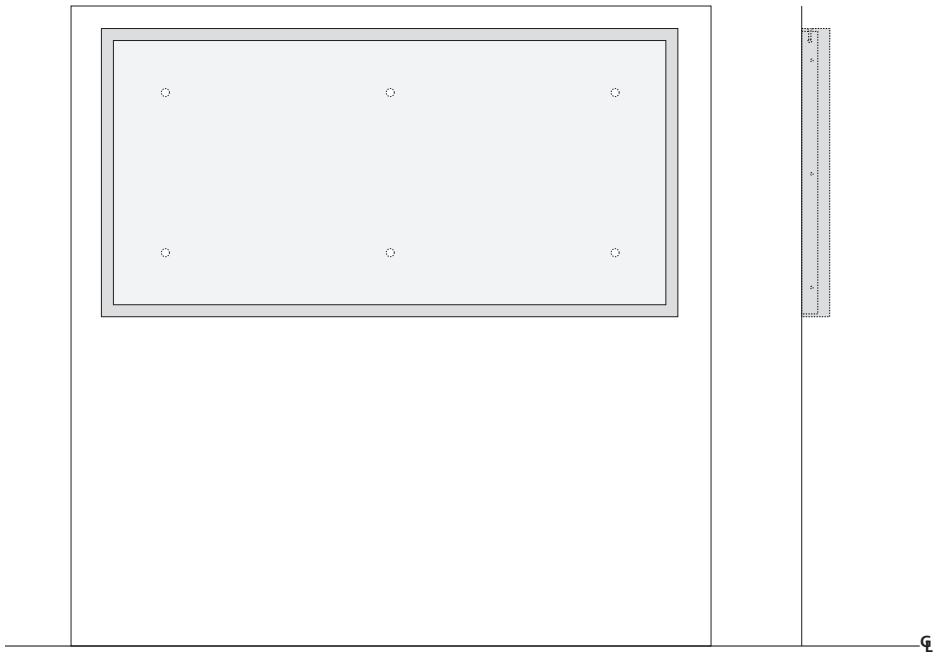

Wall Mount (WM)

Steel Fabrication

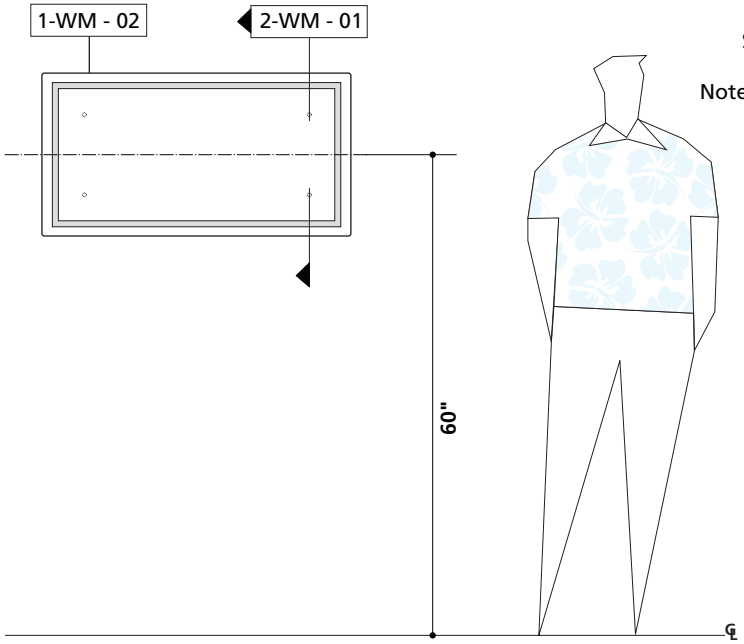

1-WM - 01 Wall Mount Elevation

Scale: 1/2" = 1'-0"

General Note:
All breakformed steel and aluminum frame edges shall be eased to prevent sharp edges and allow paint adherence.

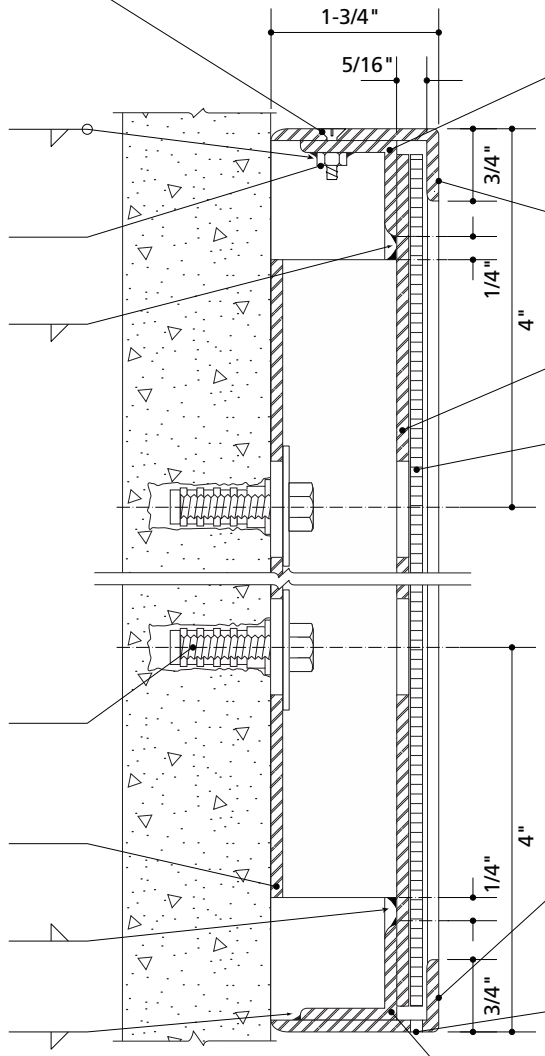

2-WM - 01 Side Section Cut

Scale: 1/2 Actual Size

WM - 01

Wall Mount (WM)

Steel Fabrication (Continued)

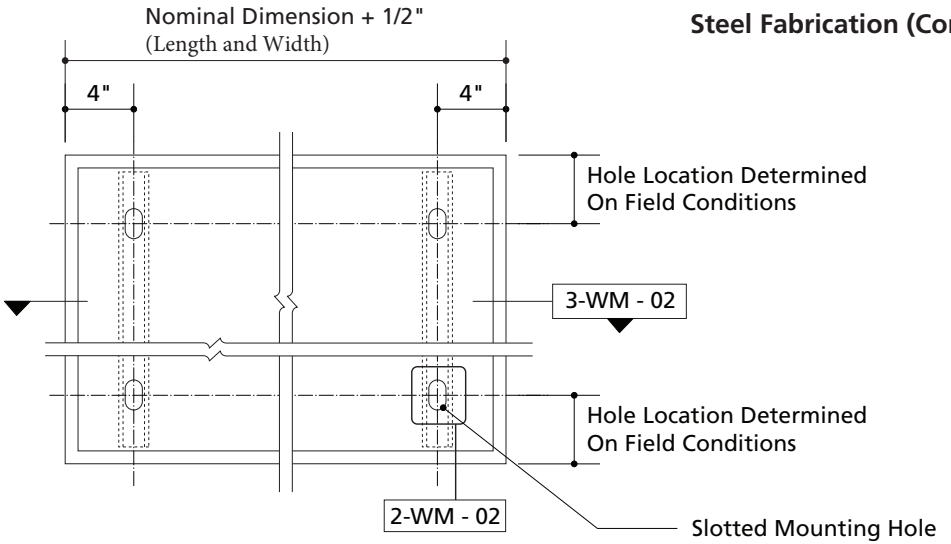

1-WM - 02 Frame Mounting Hole Locations

Scale: 1" = 1'-0"

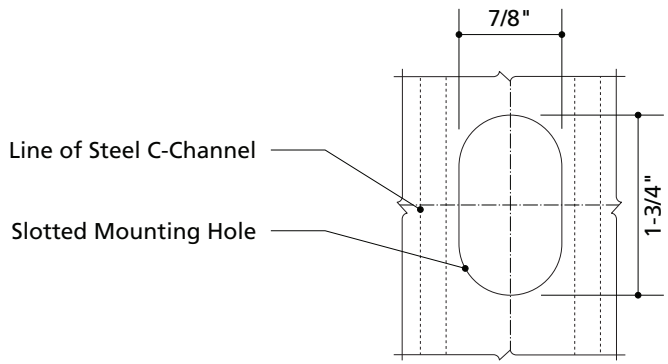

2-WM - 02 Detail at Slotted Hole

Scale: 1/2 Actual Size

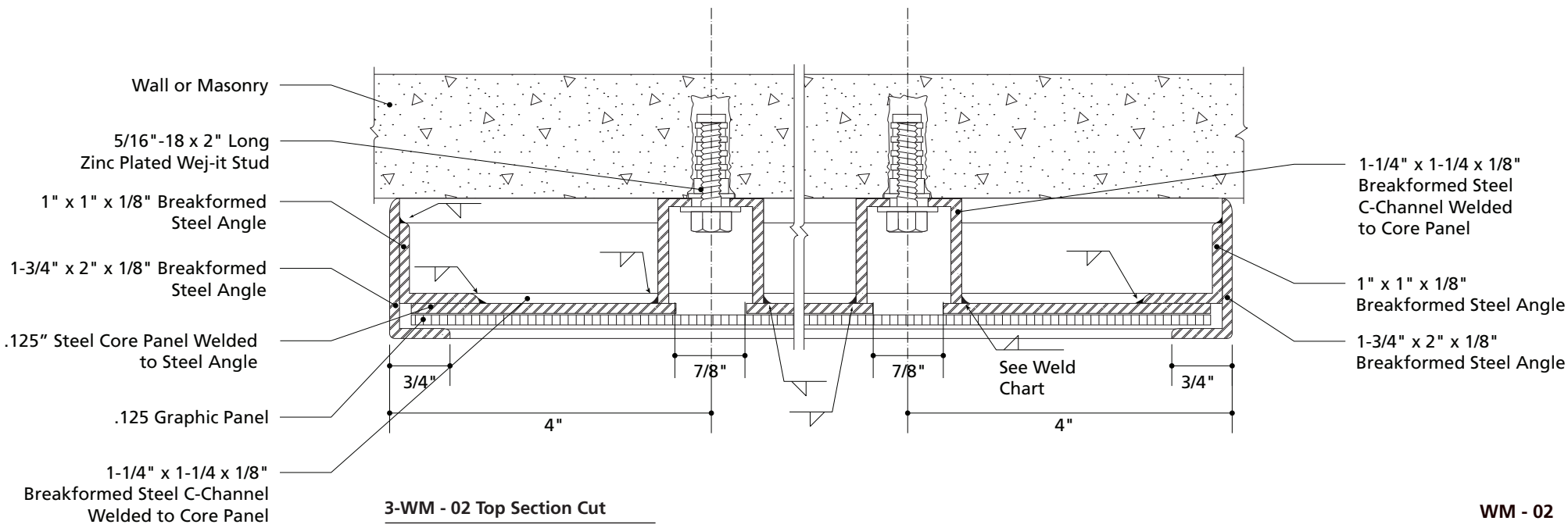

3-WM - 02 Top Section Cut

WM - 02

Wall Mount (WM)

Aluminum Fabrication

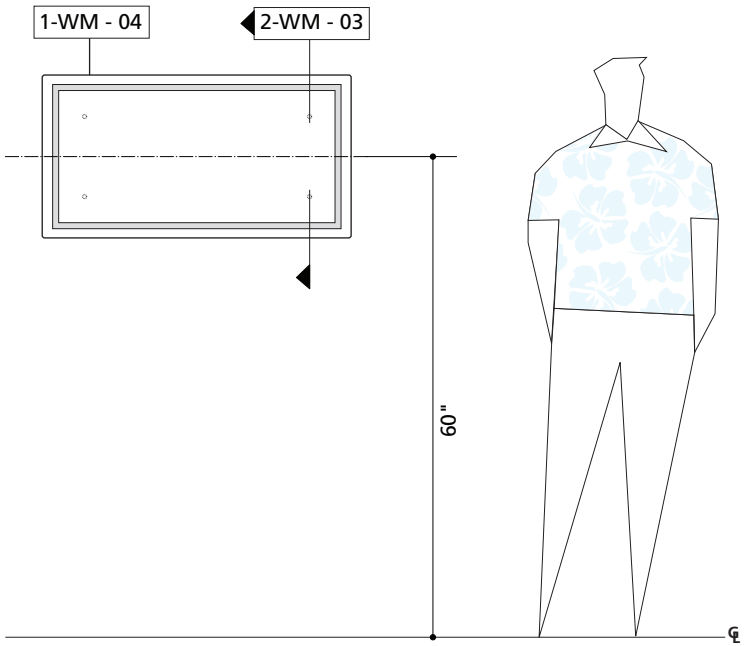

1-WM - 03 Wall Mount Elevation

Scale: 1/2" = 1'-0"

General Note:
All breakformed steel and aluminum frame edges shall be eased to prevent sharp edges and allow paint adherence.

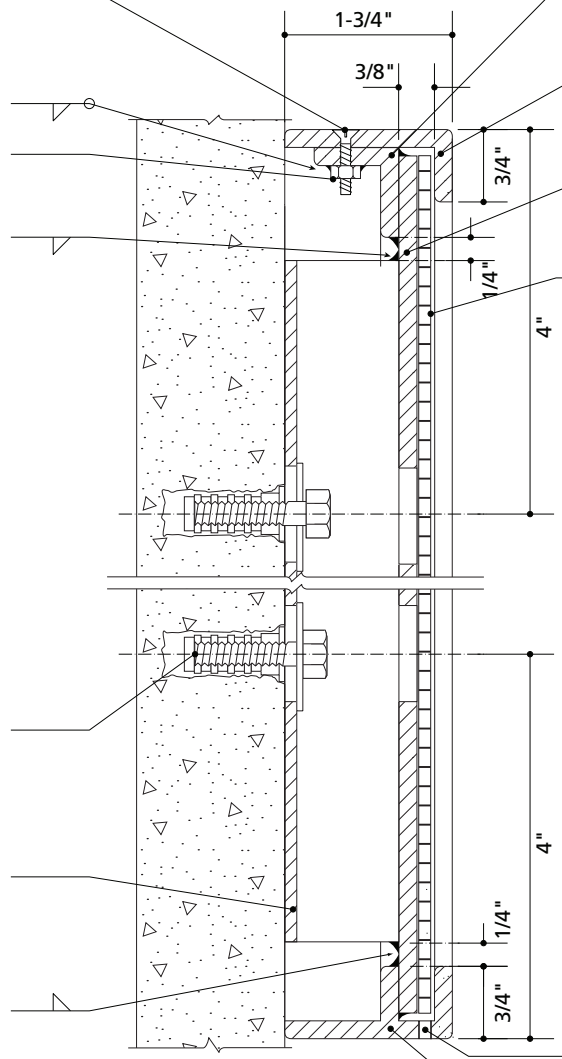

2-WM - 03 Side Section Cut

Scale: 1/2 Actual Size

WM - 03

Wall Mount (WM)

Aluminum Fabrication (Continued)

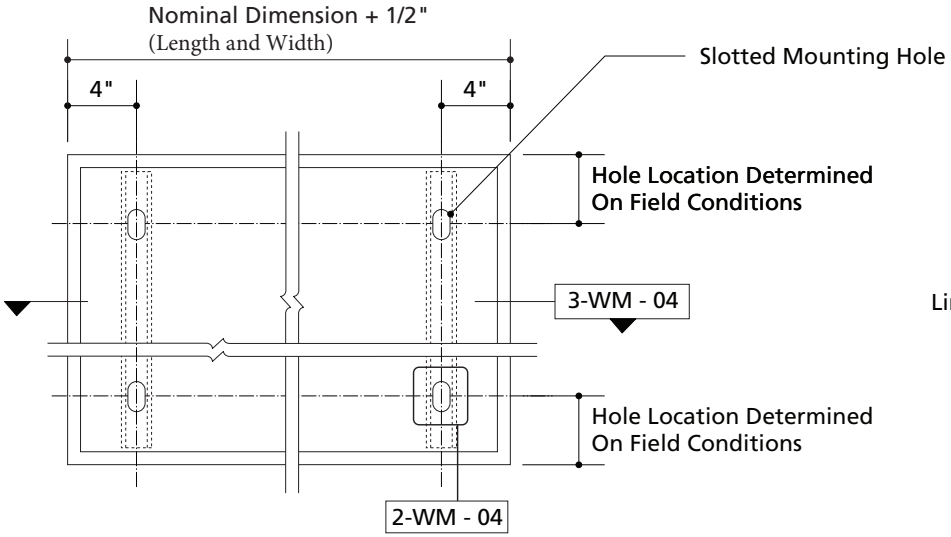

1-WM - 04 Frame Mounting Hole Locations

Scale: 1" = 1'-0"

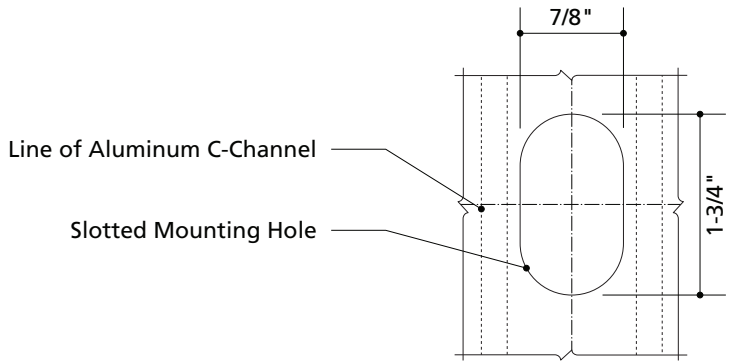

2-WM - 04 Detail at Slotted Hole

Scale: 1/2 Actual Size

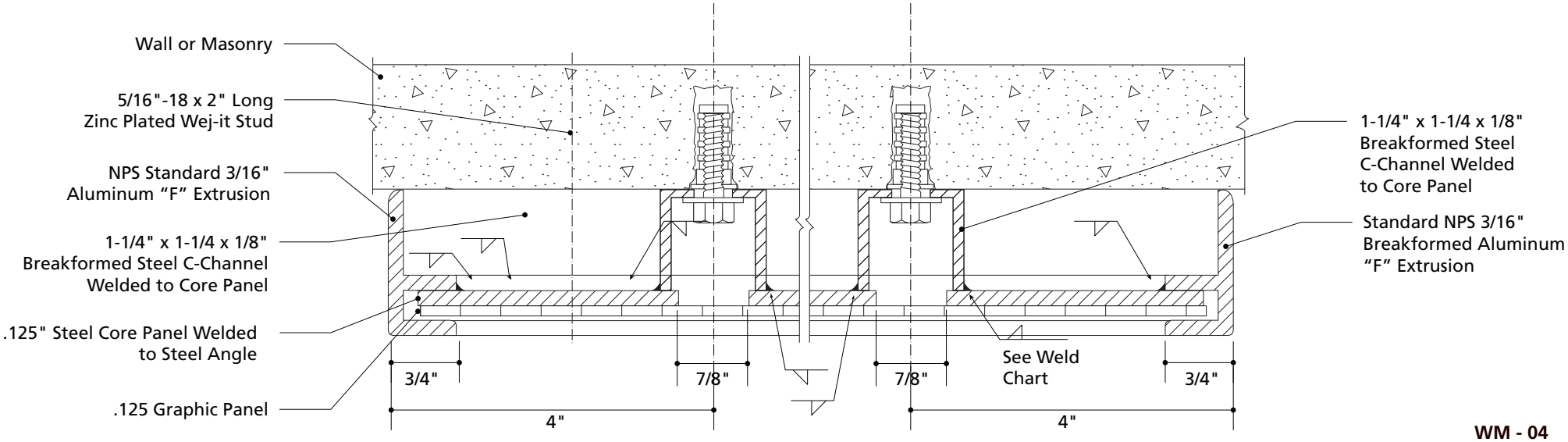

WM - 04

Low Profile (LP)

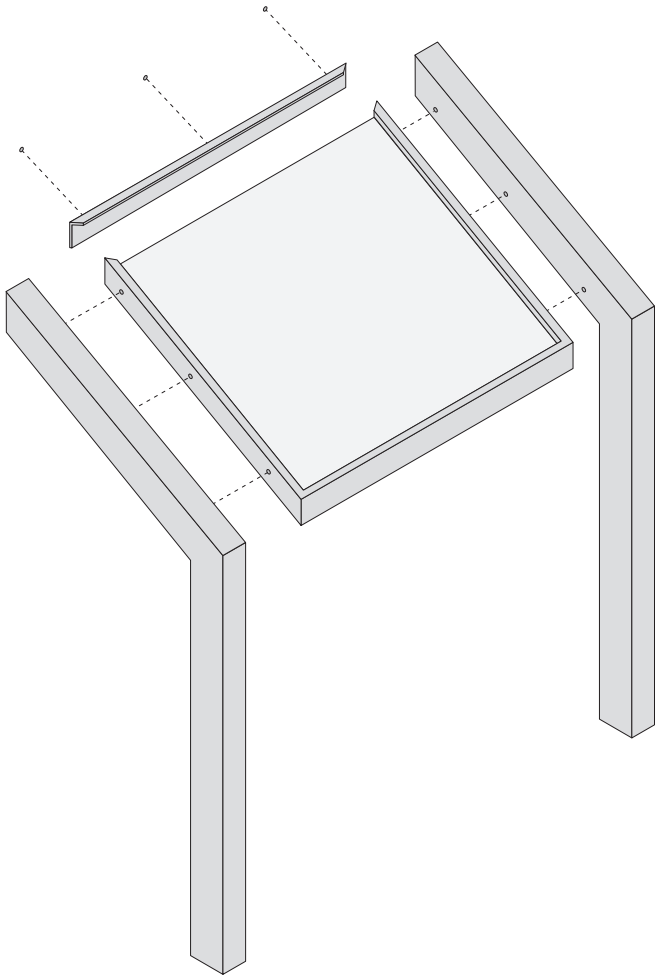

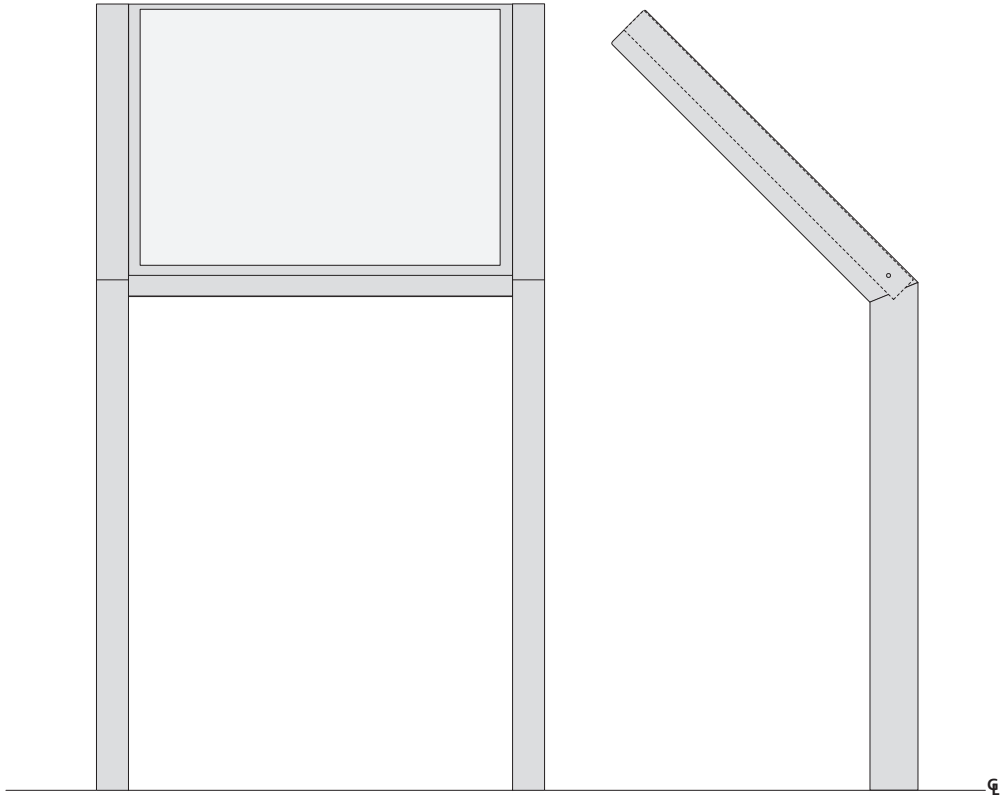

Low Profile (LP): Barstock Post

Steel Fabrication

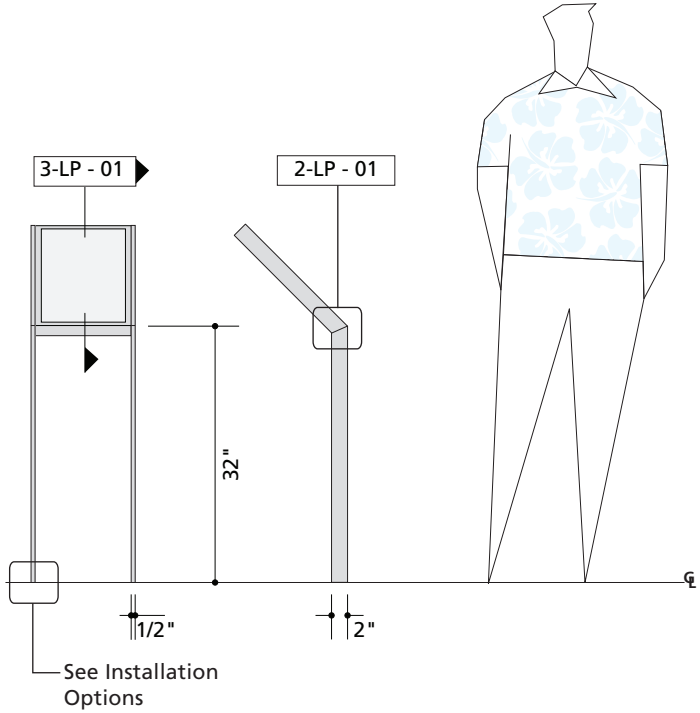

1-LP - 01 Low Profile Elevation

Scale: 1/2" = 1' -0"

General Note:
All breakformed steel and aluminum frame edges shall be eased to prevent sharp edges and allow paint adherence.

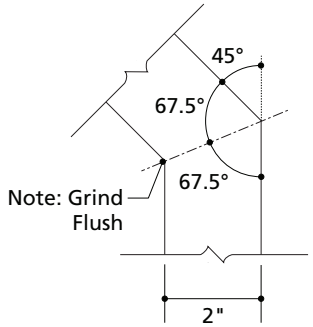

2-LP - 01 Post Detail

Scale: 3" = 1'-0"

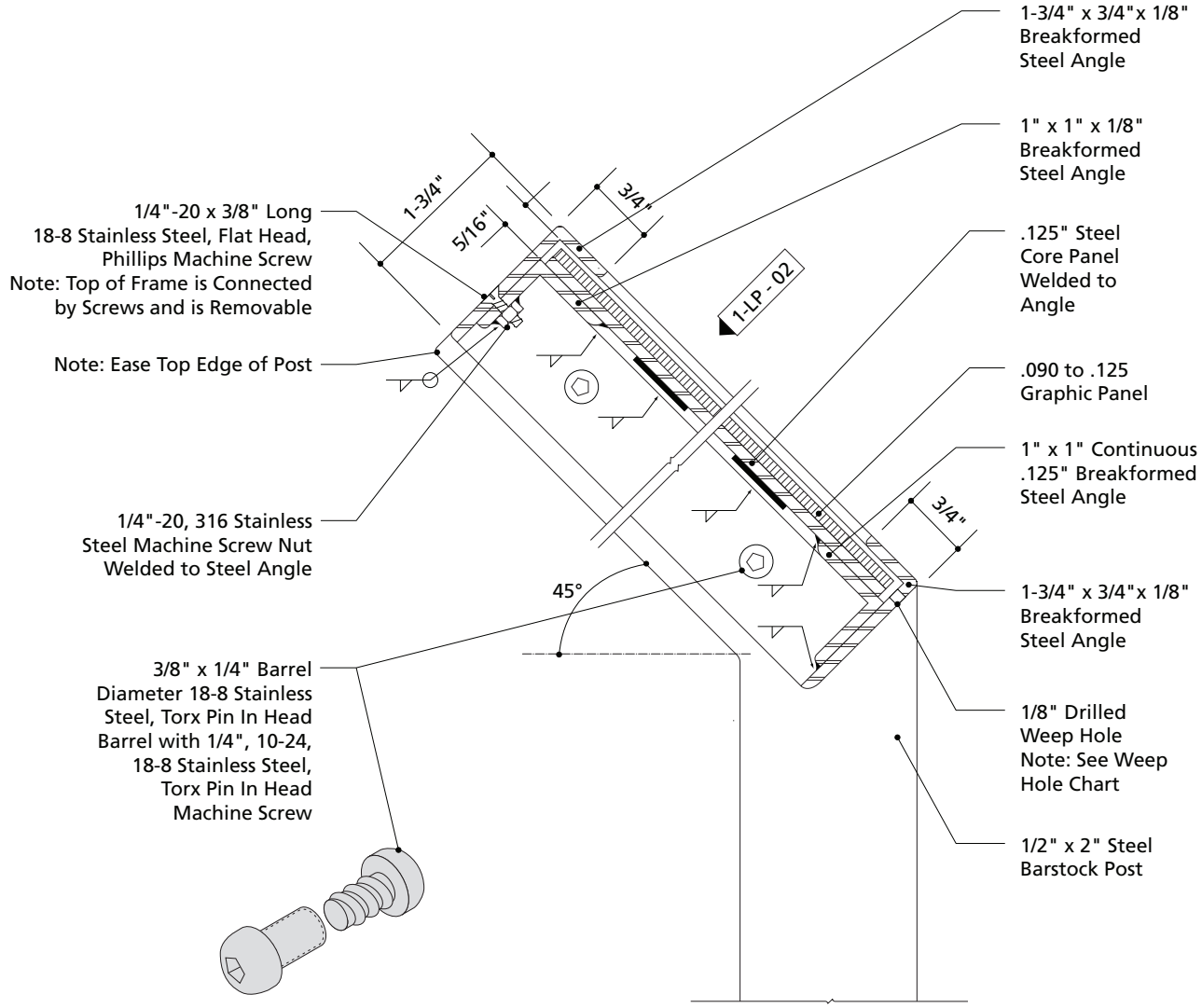

3-LP - 01 Side Section Cut

Scale: 1/2 Actual Size

LP - 01

Low Profile (LP): Barstock Post

Steel Fabrication (Continued)

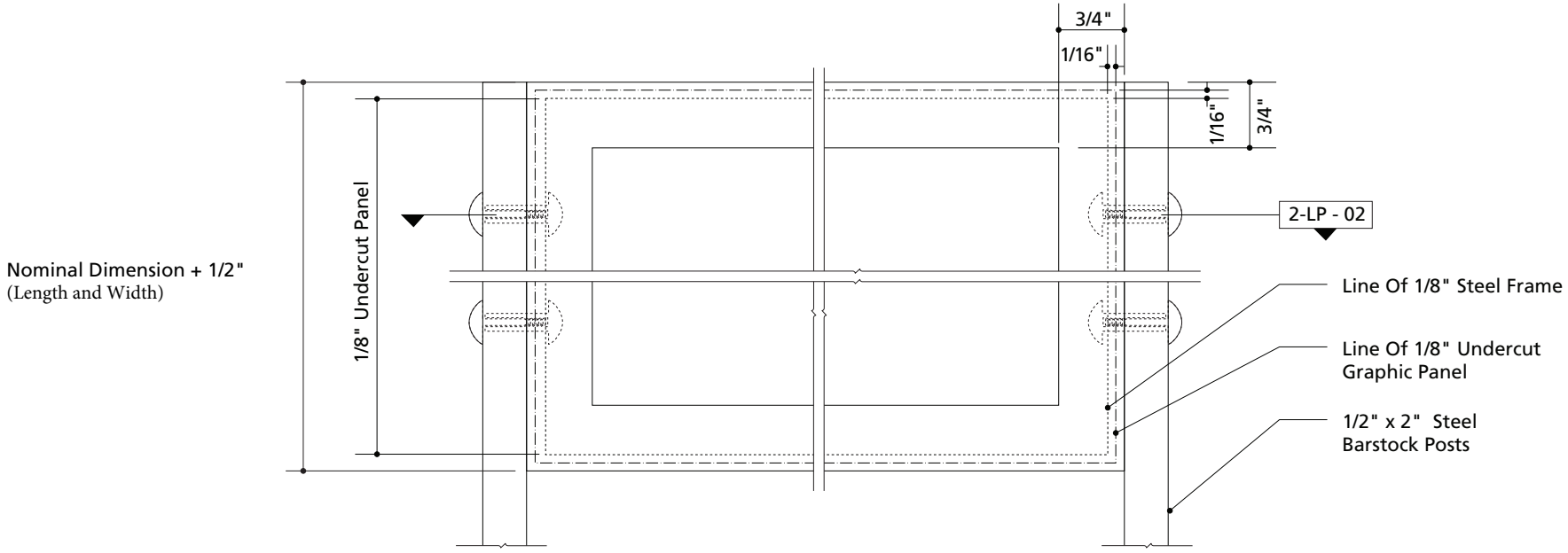

1-LP - 02 Frame Front Elevation

Scale: 1/2 Actual Size

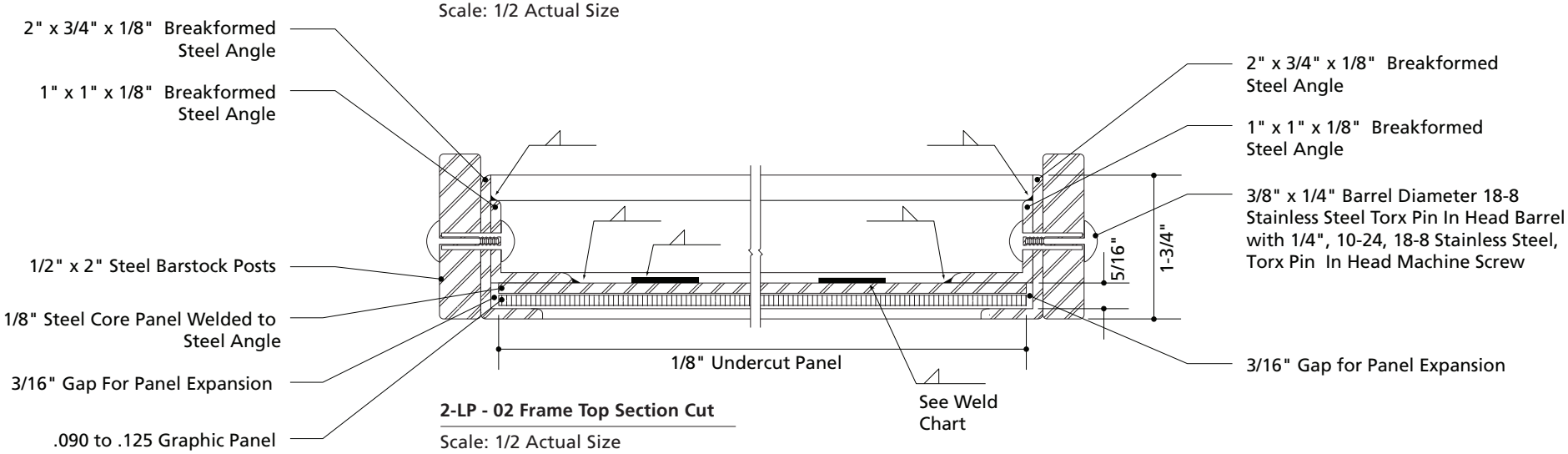

2-LP - 02 Frame Top Section Cut

Scale: 1/2 Actual Size

LP - 02

Low Profile (LP): Barstock Post

Aluminum Fabrication

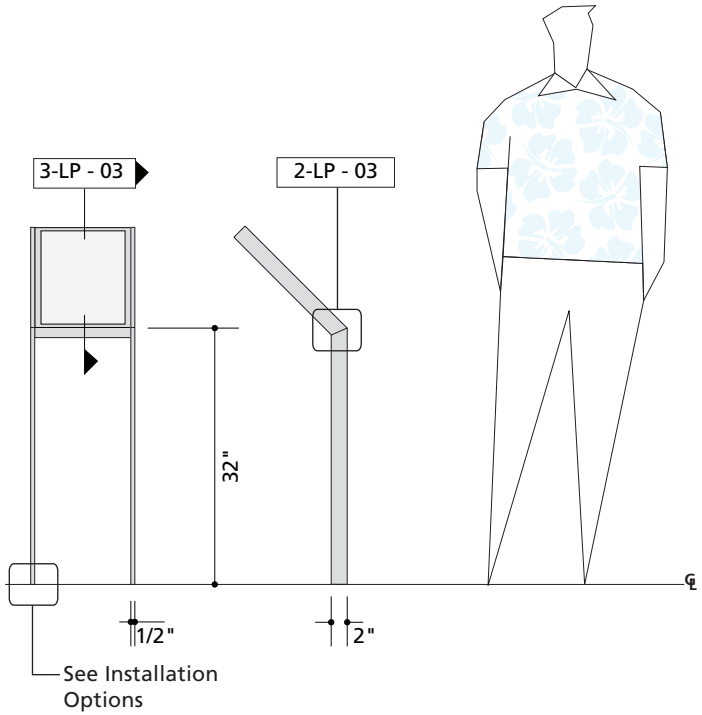

1-LP - 03 Low Profile Elevation

Scale: 1/2" = 1' -0"

General Note:
All breakformed steel and aluminum frame edges shall be eased to prevent sharp edges and allow paint adherence.

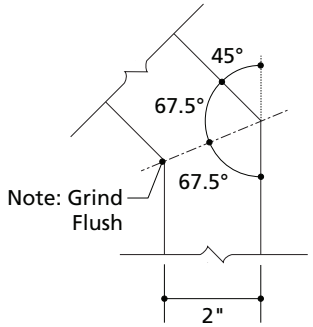

2-LP - 03 Post Detail

Scale: 3" = 1' -0"

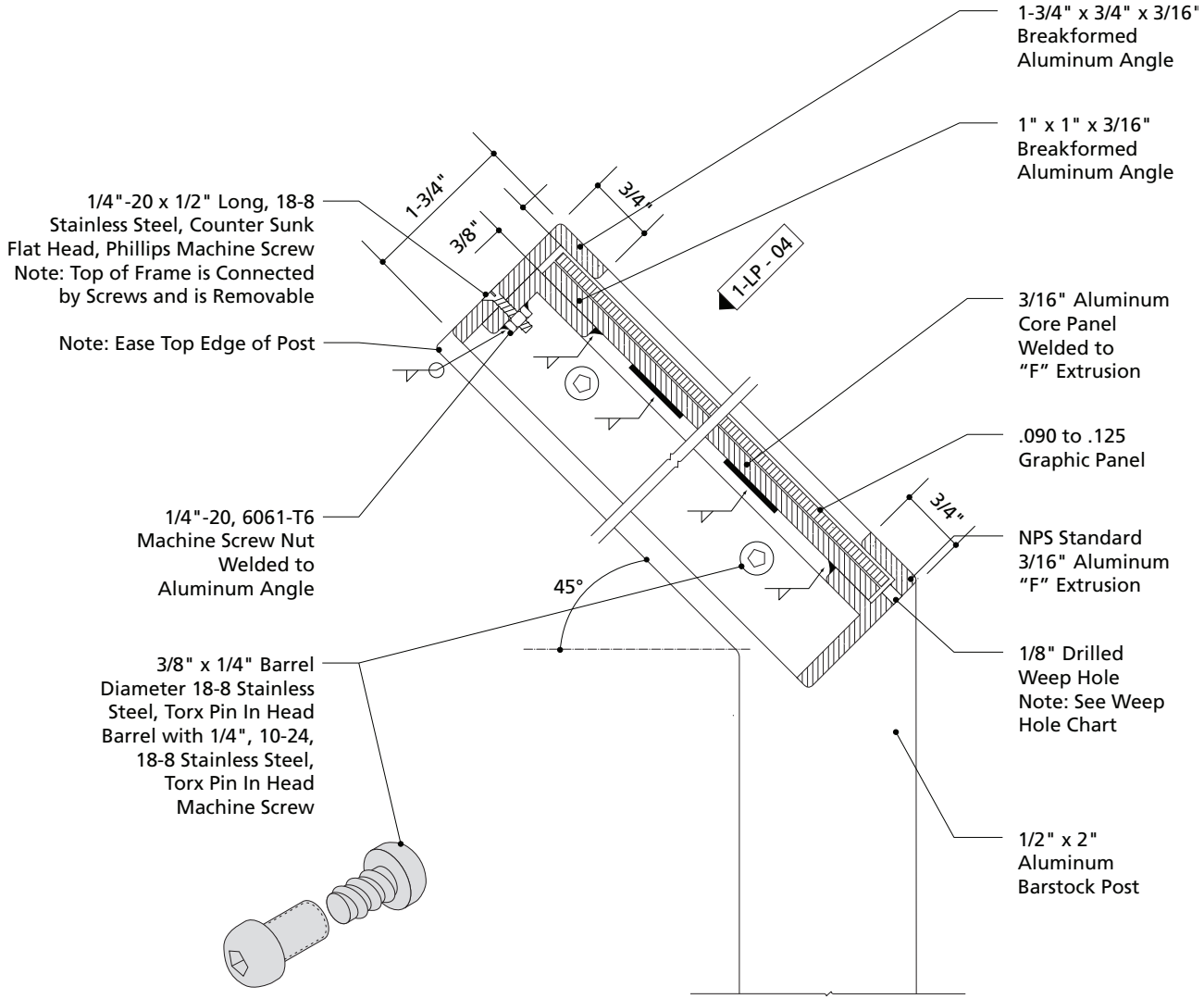

3-LP - 03 Side Section Cut

Scale: 1/2 Actual Size

LP - 03

Low Profile (LP): Barstock Post

Aluminum Fabrication (Continued)

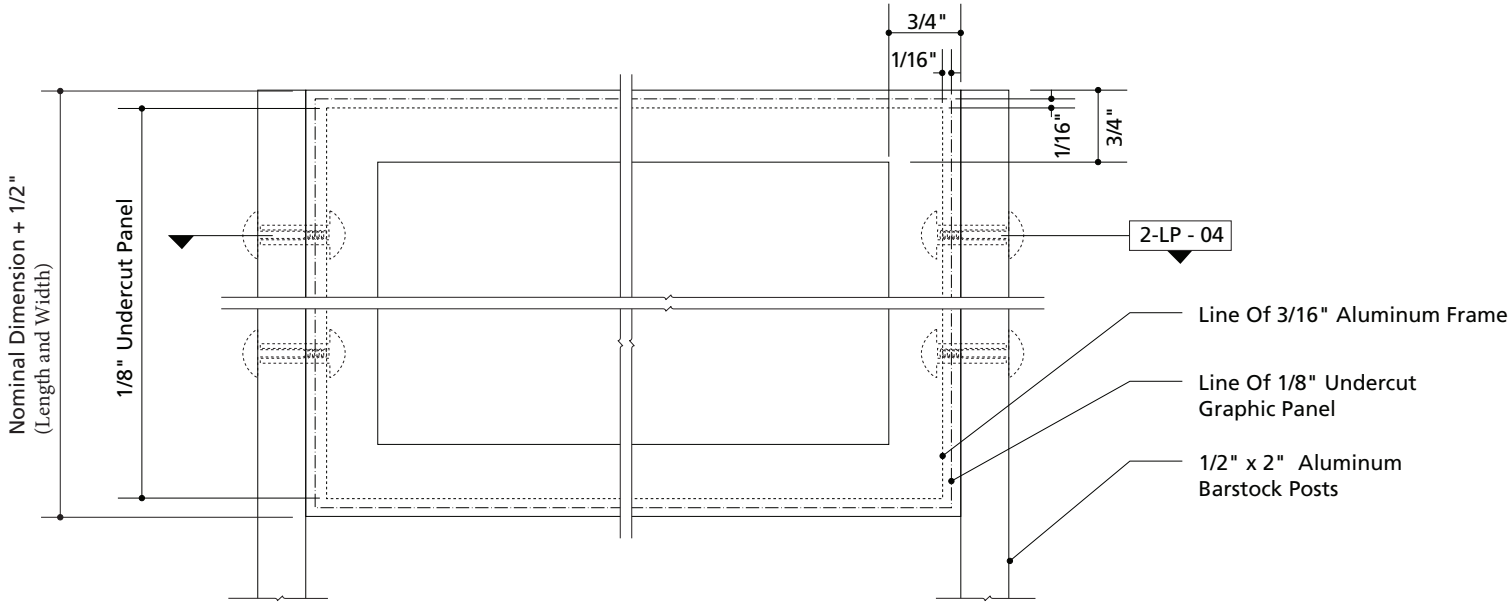

1-LP - 04 Frame Front Elevation

Scale: 1/2 Actual Size

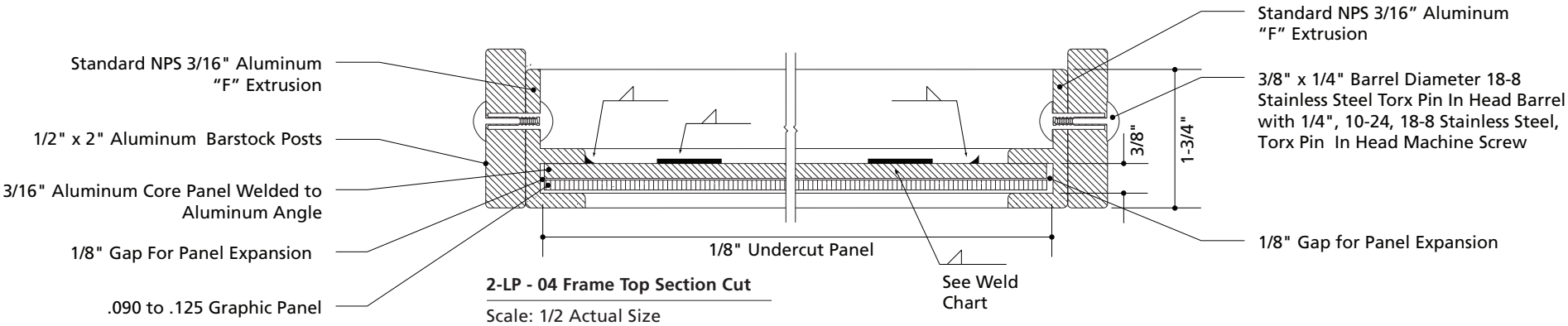

2-LP - 04 Frame Top Section Cut

Scale: 1/2 Actual Size

LP - 04

Low Profile (LP): 2" x 2" Post

Steel Fabrication

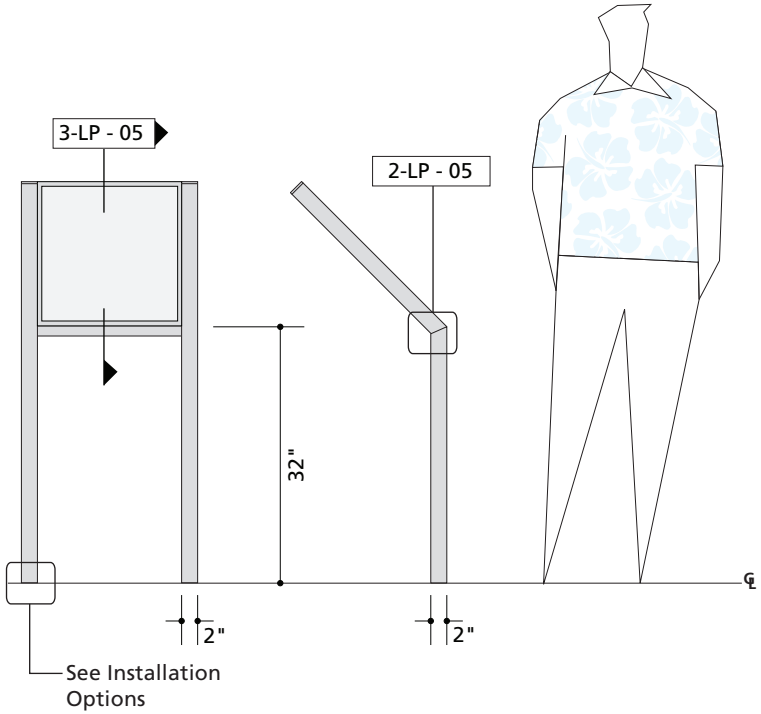

1-LP - 05 Low Profile Elevation

Scale: 1/2" = 1' -0"

General Note:
All breakformed steel and aluminum frame edges shall be eased to prevent sharp edges and allow paint adherence.

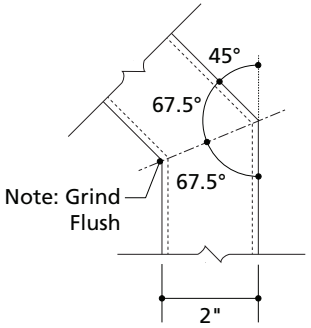

2-LP - 05 Post Detail

Scale: 3" = 1' -0"

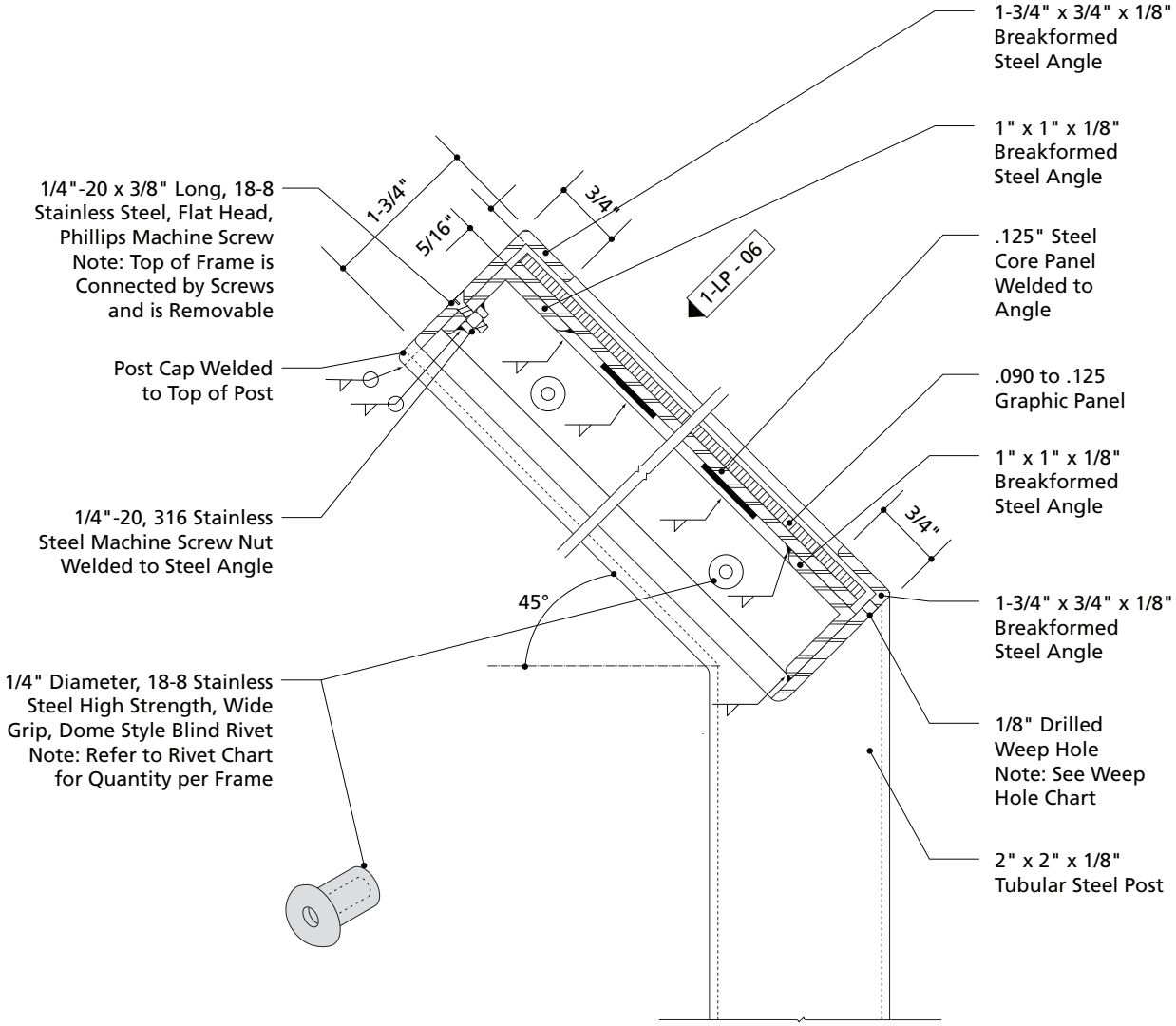

3-LP - 05 Side Section Cut

Scale: 1/2 Actual Size

LP - 05

Low Profile (LP): 2" x 2" Post

Steel Fabrication (Continued)

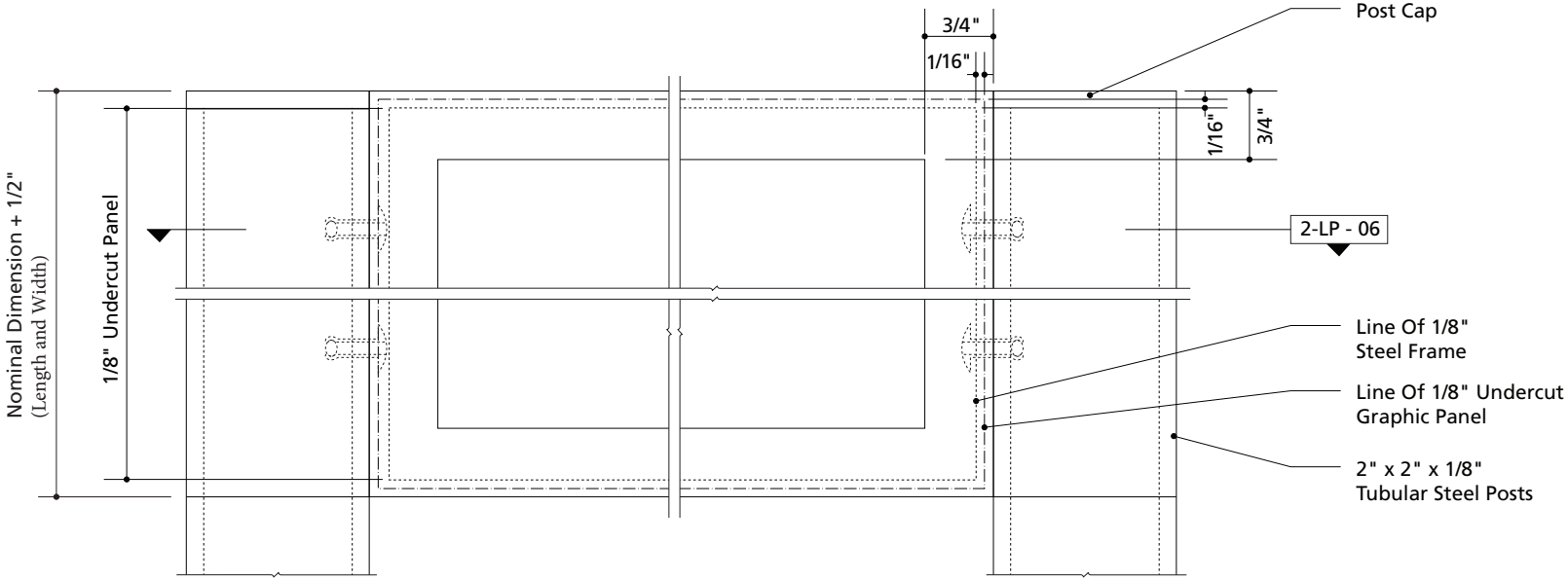

1-LP - 06 Frame Front Elevation

Scale: 1/2 Actual Size

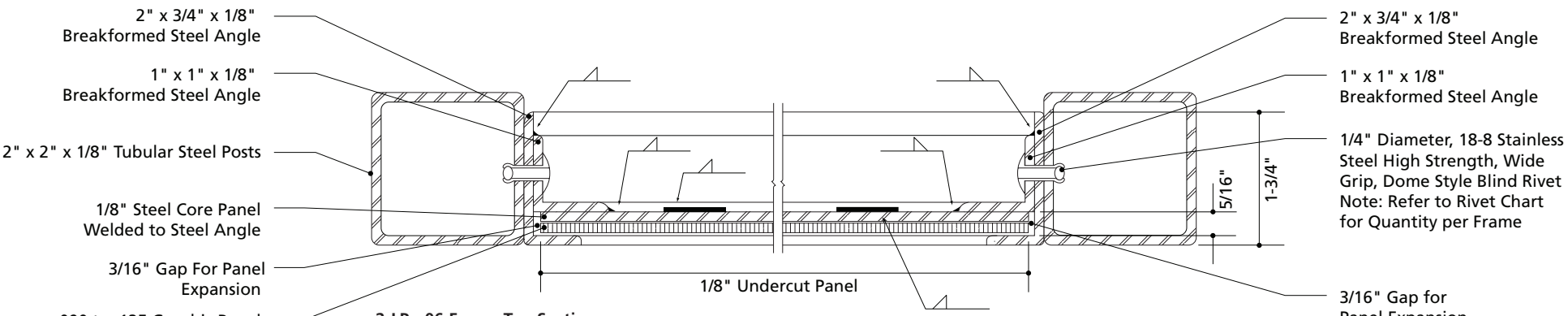

2-LP - 06 Frame Top Section

Scale: 1/2 Actual Size

LP - 06

Low Profile (LP): 2" x 2" Post

Aluminum Fabrication

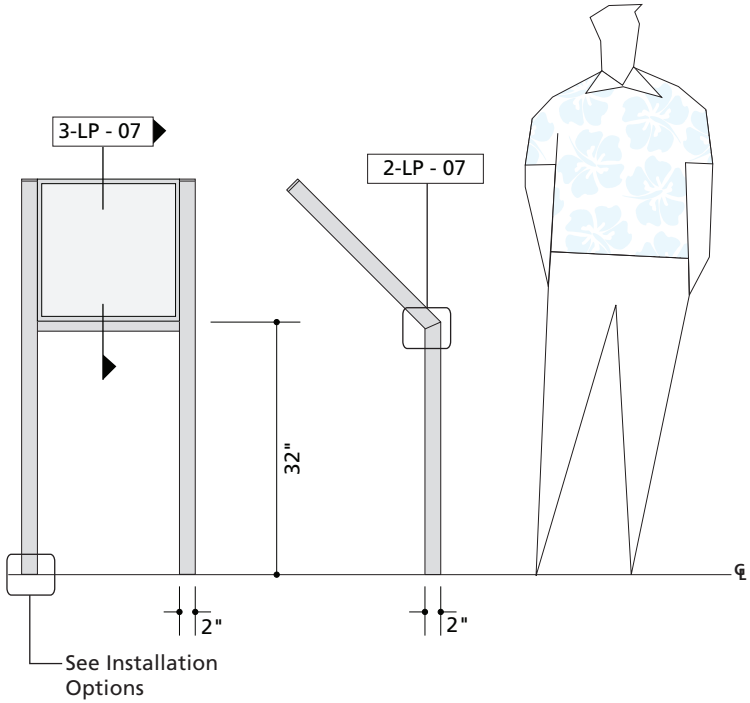

1-LP - 07 Low Profile Elevation

Scale: 1/2" = 1' -0"

General Note:
All breakformed steel and aluminum frame edges shall be eased to prevent sharp edges and allow paint adherence.

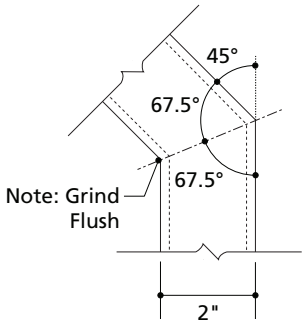

2-LP - 07 Post Detail

Scale: 3" = 1' -0"

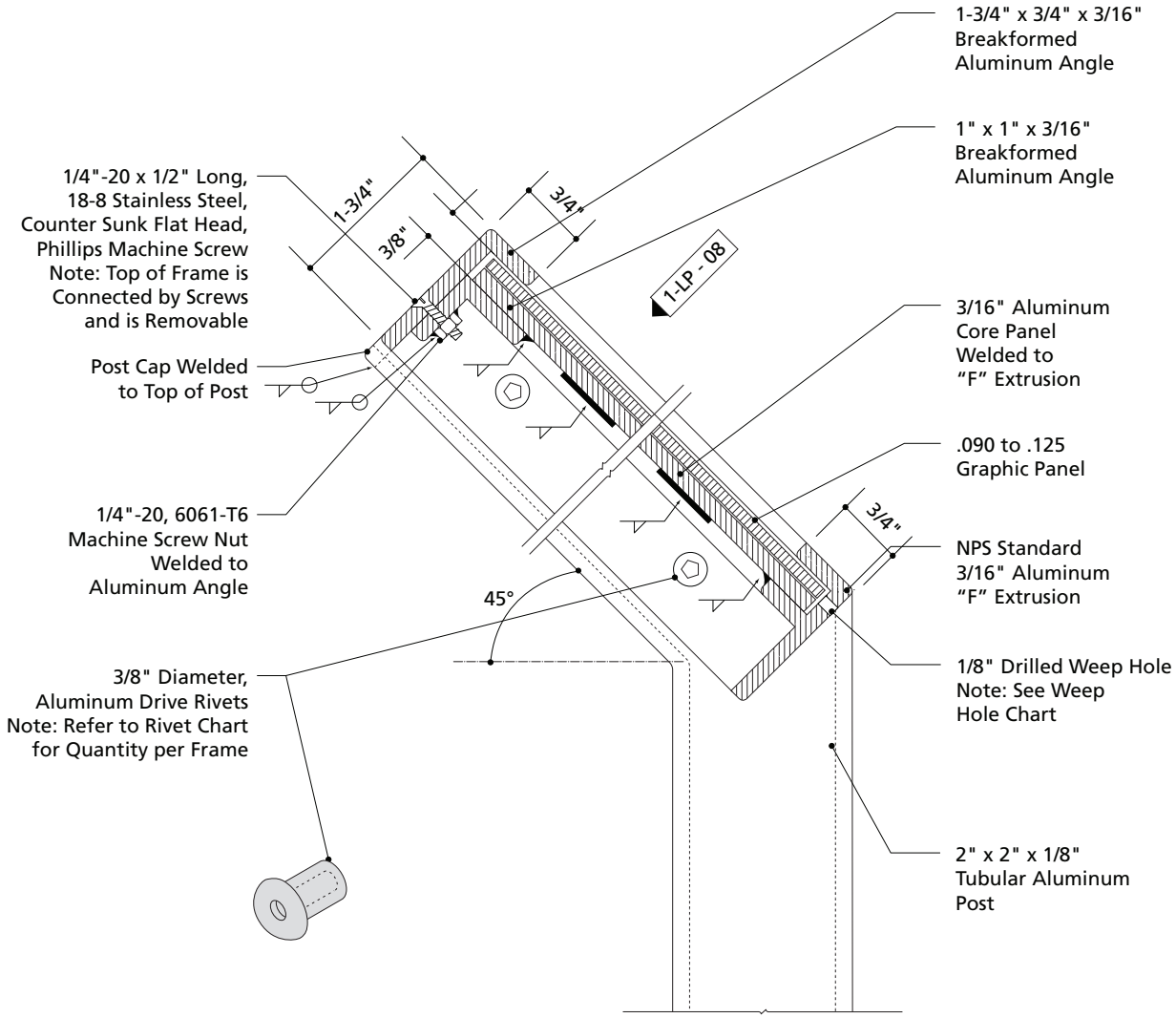

3-LP - 07 Side Section Cut

Scale: 1/2 Actual Size

LP - 07

Low Profile (LP): 2" x 2" Post

Aluminum Fabrication (Continued)

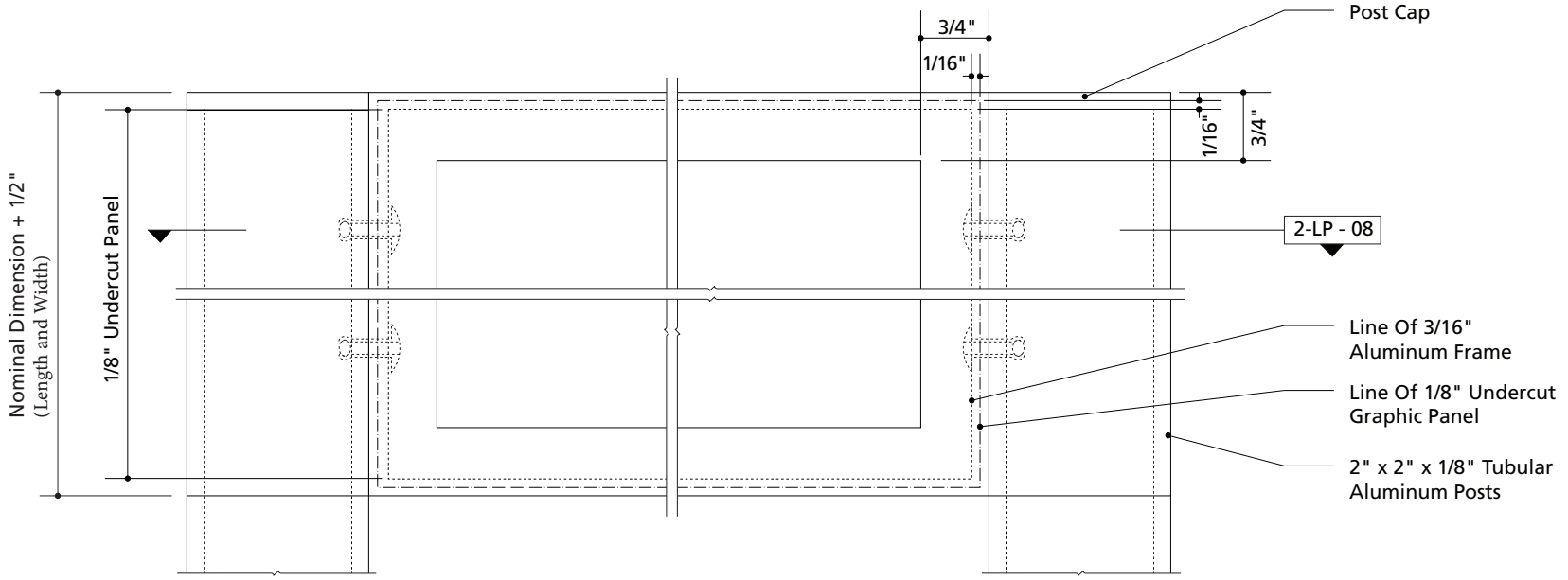

1-LP - 08 Frame Front Elevation

Scale: 1/2 Actual Size

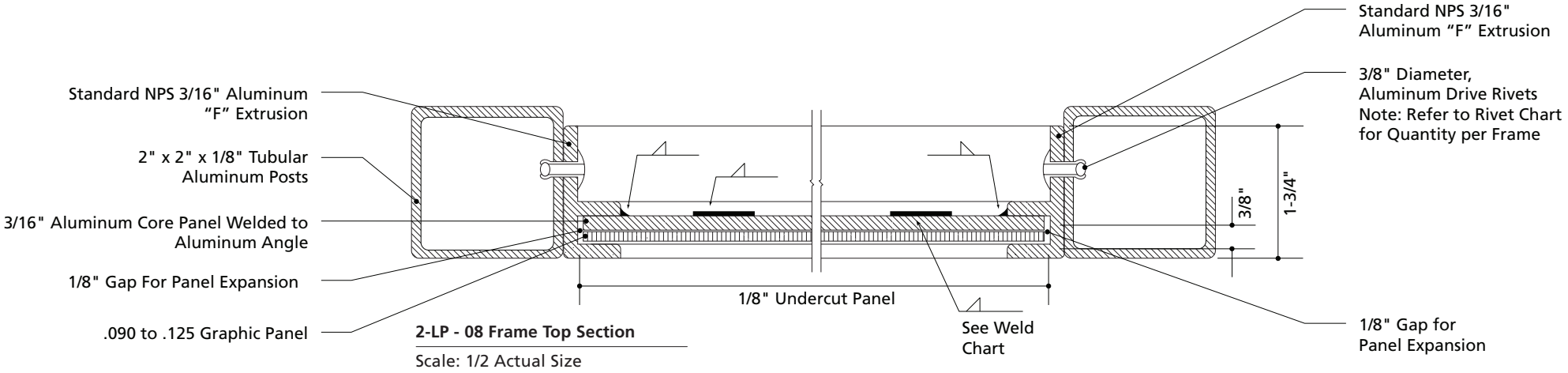

2-LP - 08 Frame Top Section

Scale: 1/2 Actual Size

LP - 08

Low Profile (LP): 2" x 3" Post

Steel Fabrication

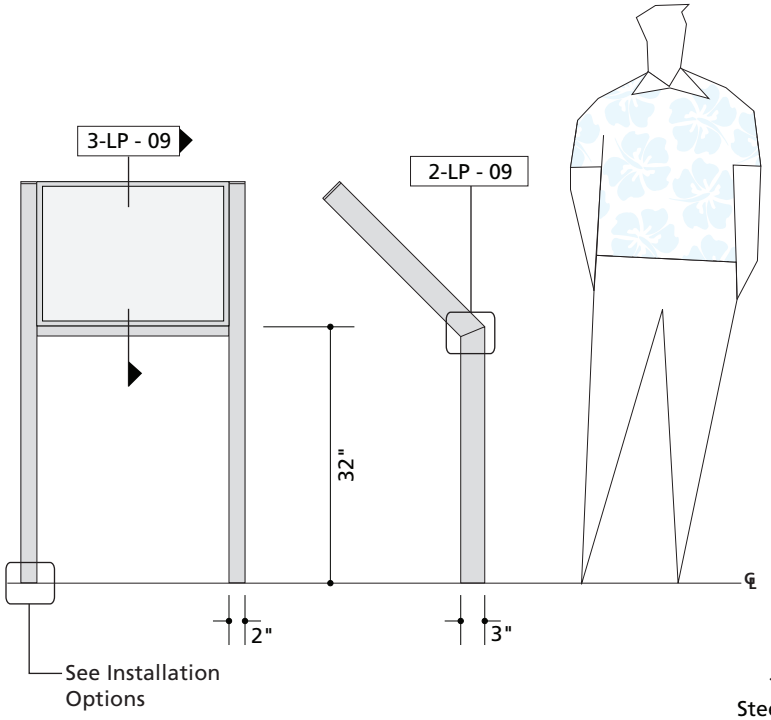

1-LP - 09 Low Profile Elevation

Scale: 1/2" = 1' -0"

General Note:
All breakformed steel and aluminum frame edges shall be eased to prevent sharp edges and allow paint adherence.

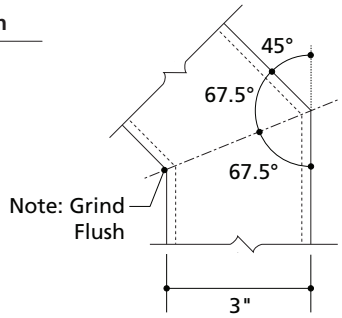

2-LP - 09 Post Detail

Scale: 3" = 1' -0"

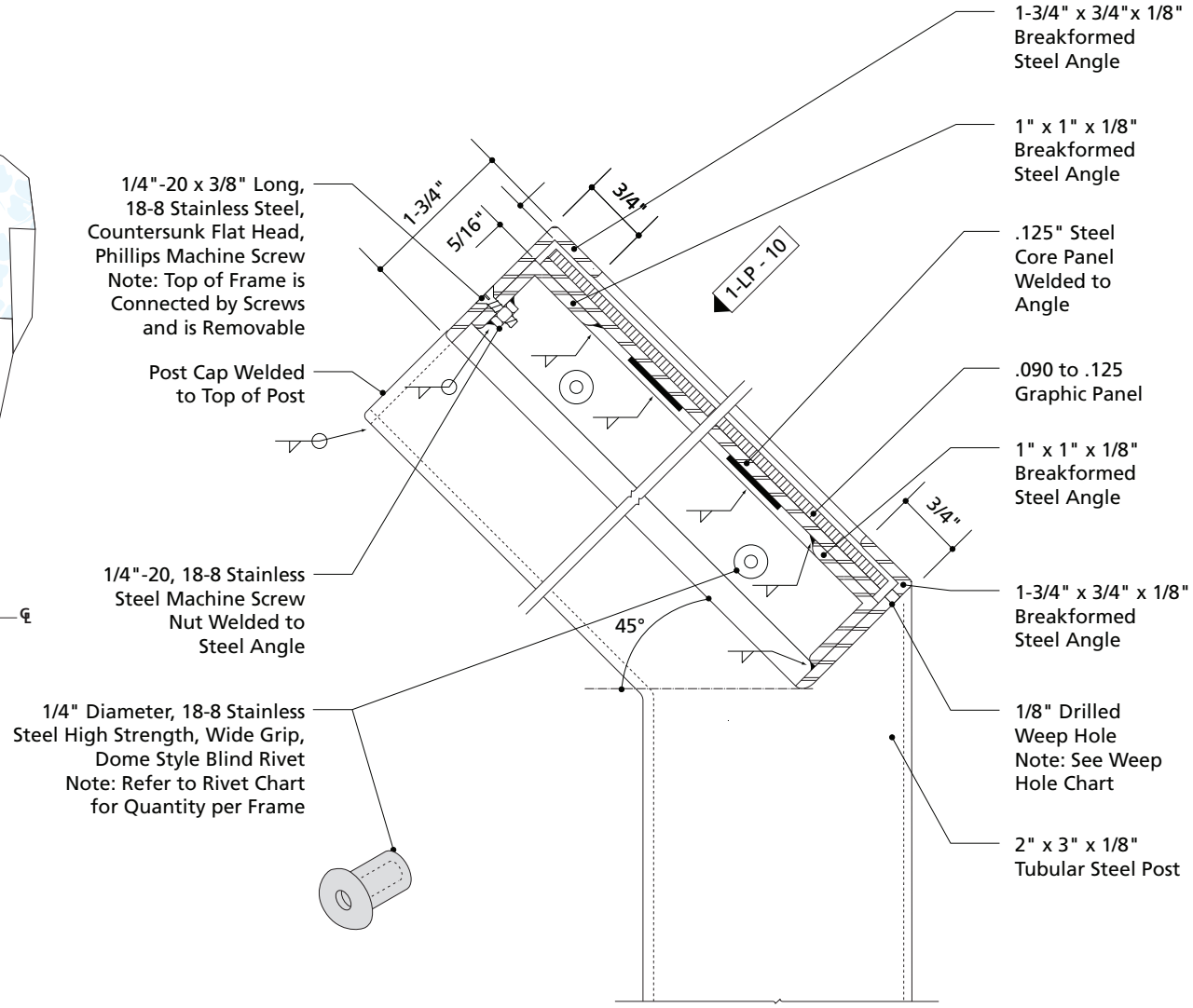

3-LP - 09 Side Section Cut

Scale: 1/2 Actual Size

LP - 09

Low Profile (LP): 2" x 3" Post

Steel Fabrication (Continued)

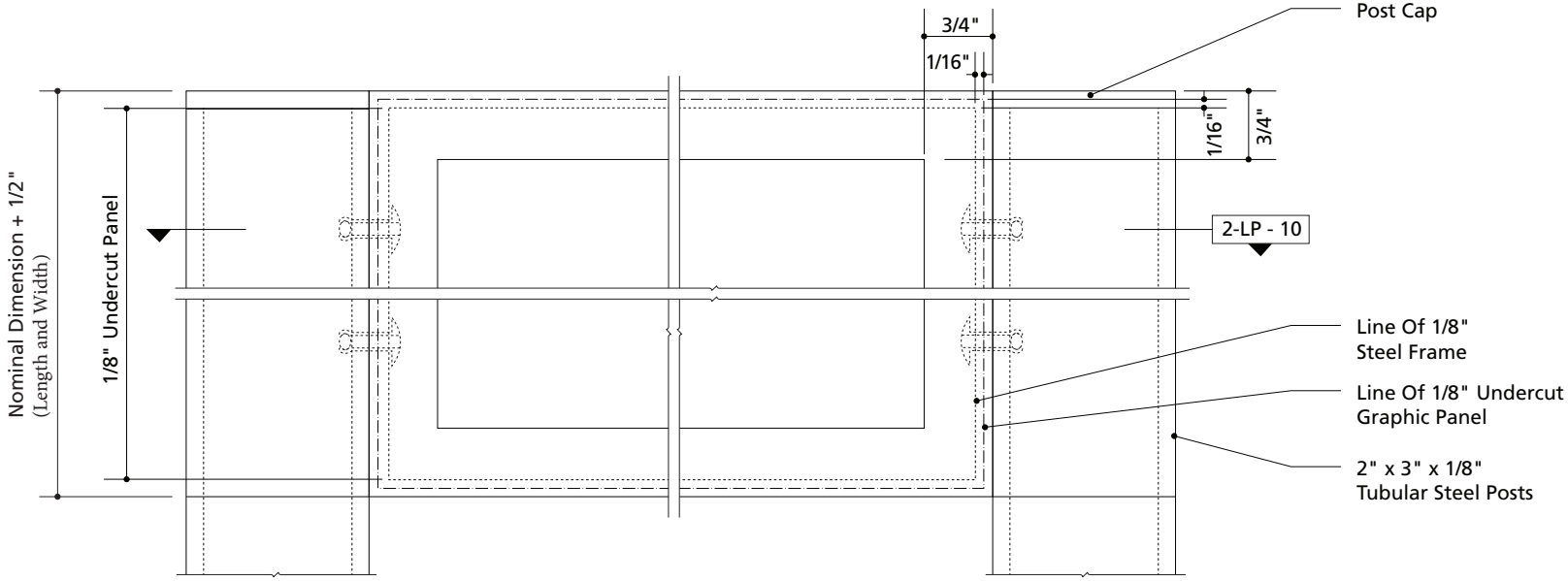

1-LP - 10 Frame Front Elevation

Scale: 1/2 Actual Size

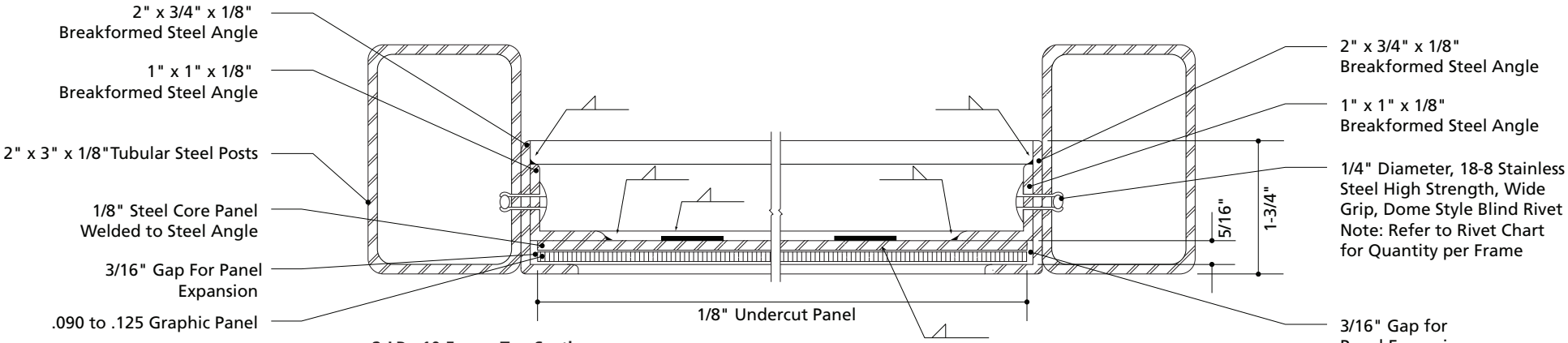

2-LP - 10 Frame Top Section

Scale: 1/2 Actual Size

Low Profile (LP): 2" x 3" Post

Aluminum Fabrication

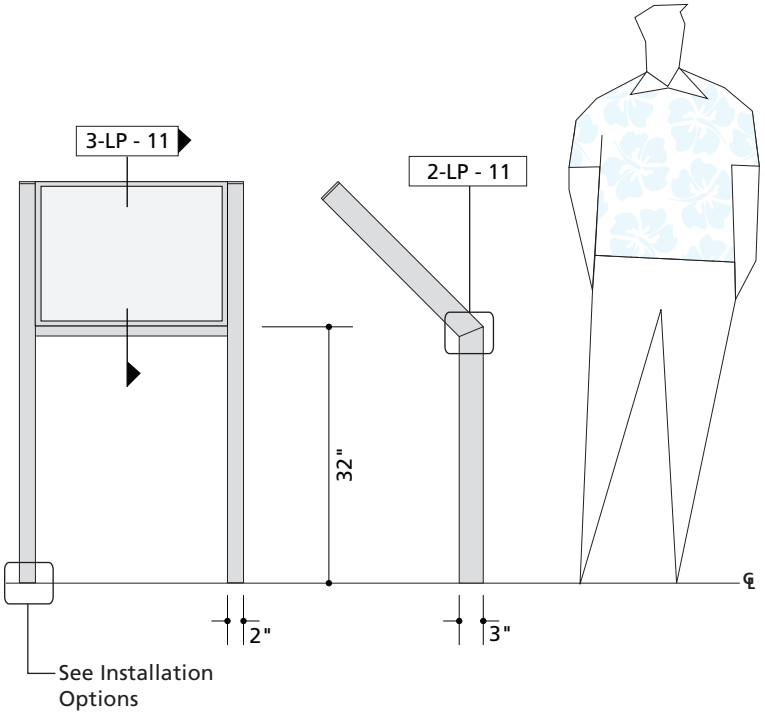

1-LP - 11 Low Profile Elevation

Scale: 1/2" = 1' -0"

General Note:
All breakformed steel and aluminum frame edges shall be eased to prevent sharp edges and allow paint adherence.

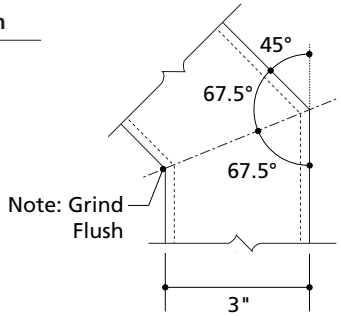

2-LP - 11 Post Detail

Scale: 3" = 1' -0"

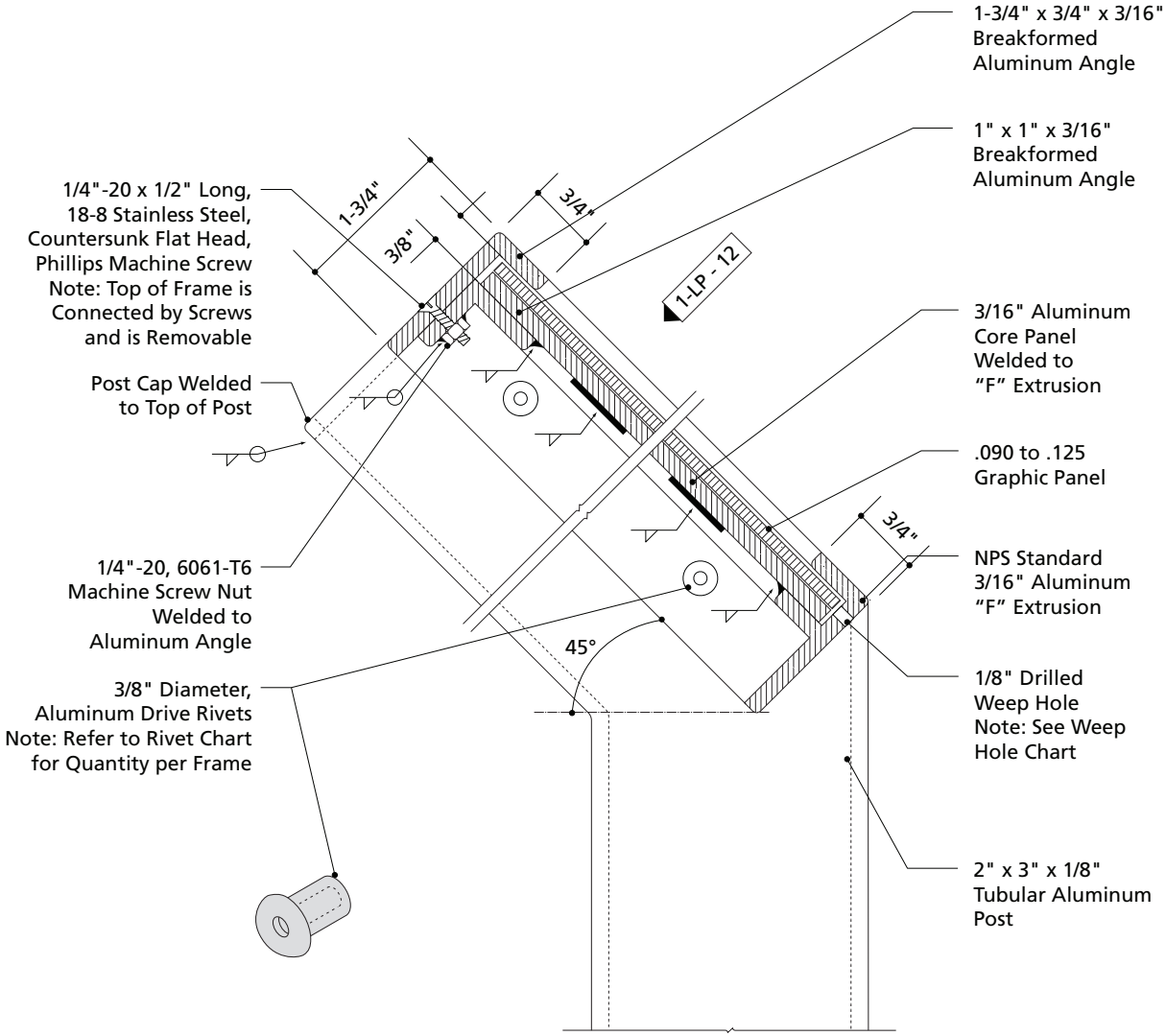

3-LP - 11 Side Section Cut

Scale: 1/2 Actual Size

LP - 11

Low Profile (LP): 2" x 3" Post

Aluminum Fabrication (Continued)

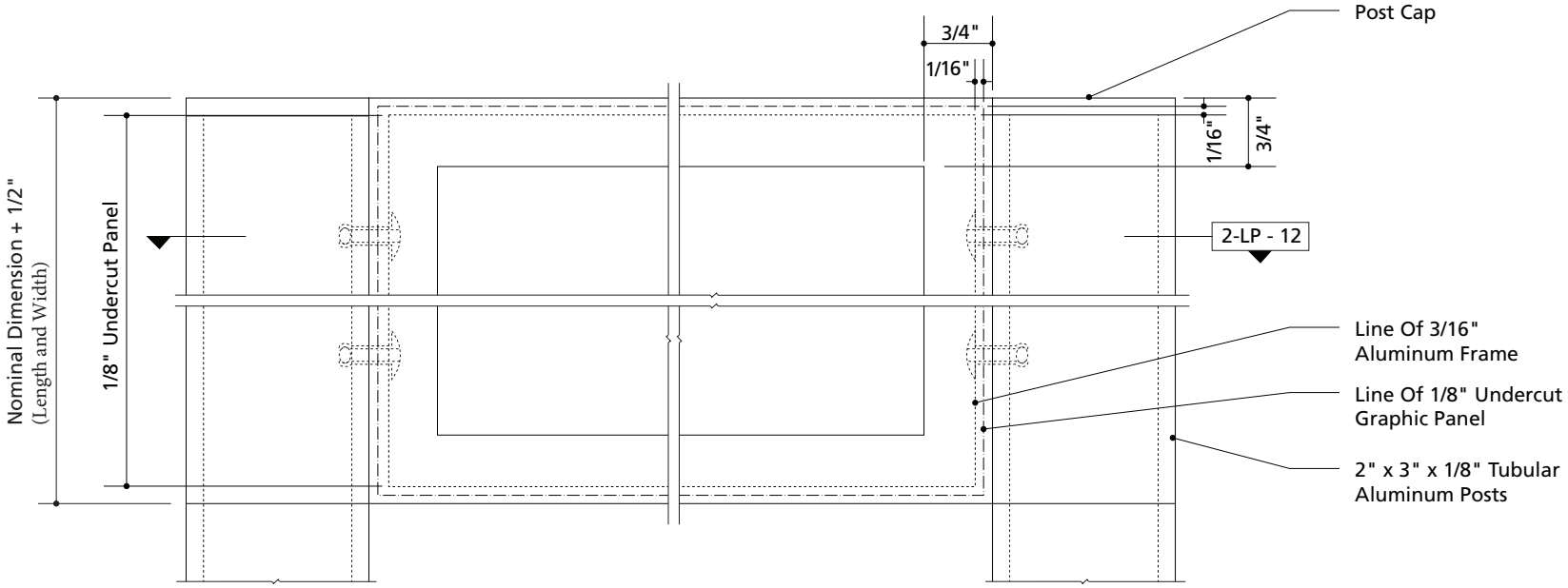

1-LP - 12 Frame Front Elevation

Scale: 1/2 Actual Size

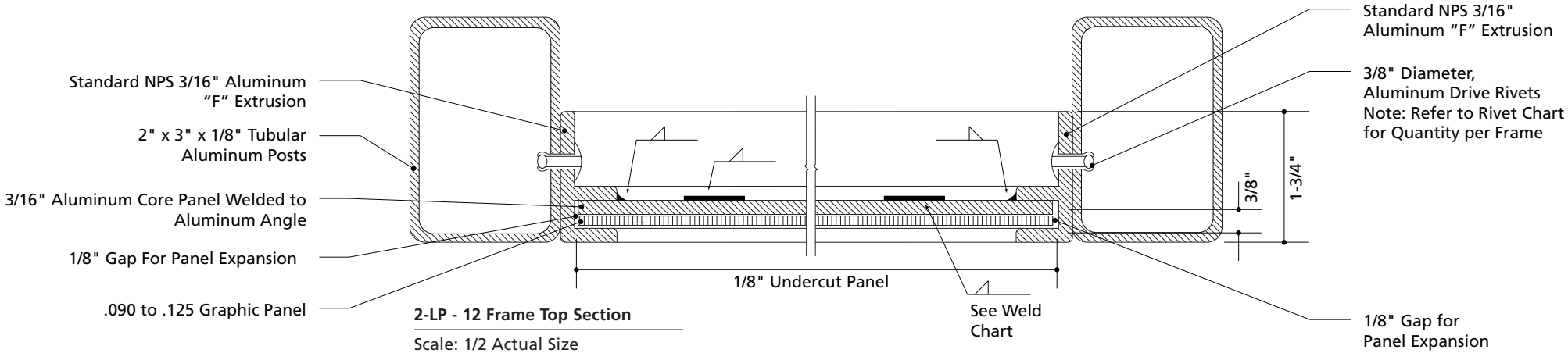

2-LP - 12 Frame Top Section

Scale: 1/2 Actual Size

LP - 12

Upright Series (UP)

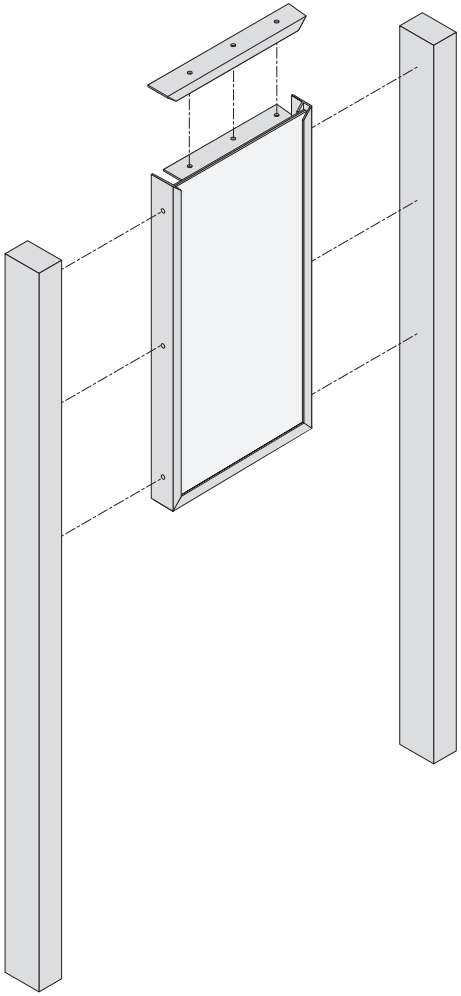

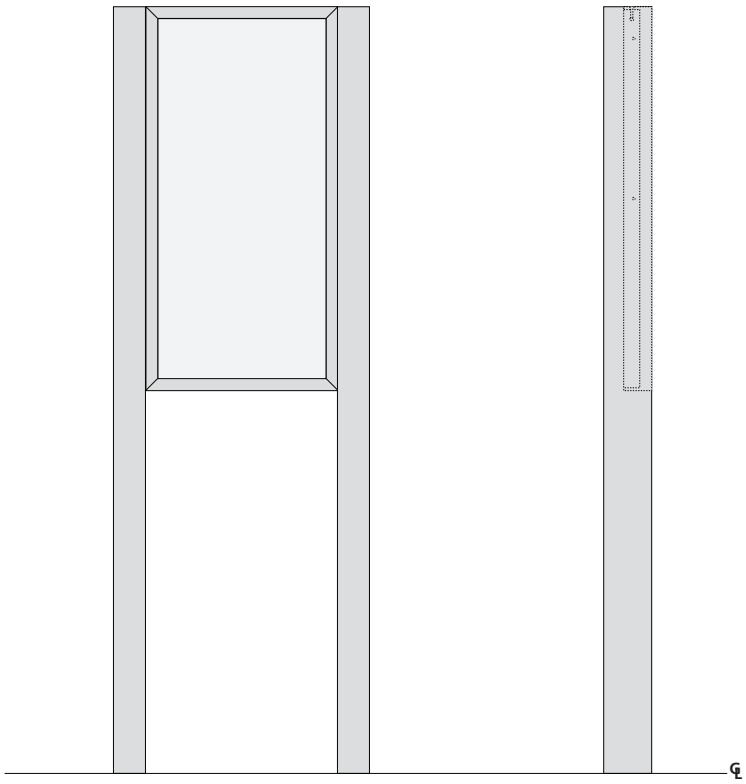

Upright Series (UP): Barstock Post

Single-sided Steel Fabrication

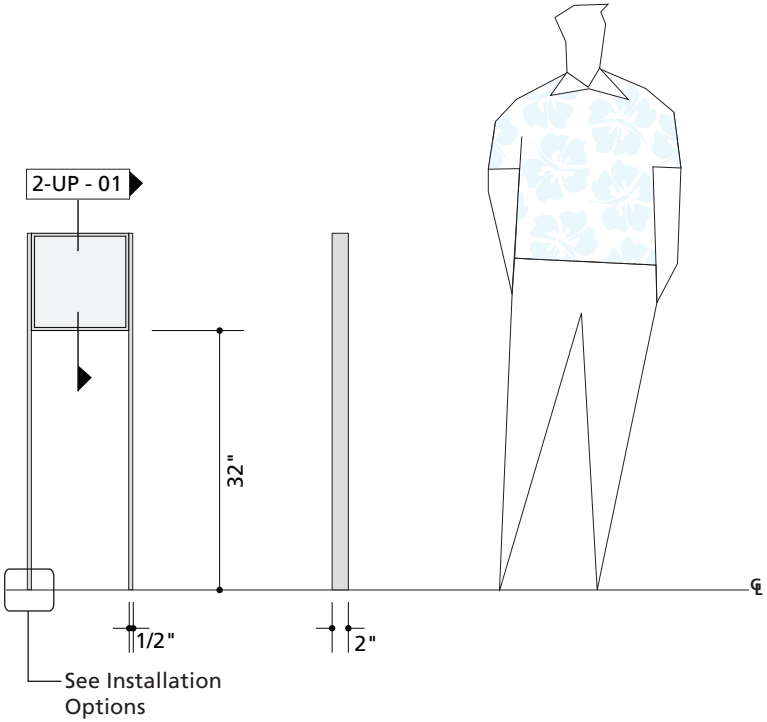

1-UP - 01 Upright Elevation

Scale: 1/2" = 1' -0"

General Note:
All breakformed steel and aluminum frame edges shall be eased to prevent sharp edges and allow paint adherence.

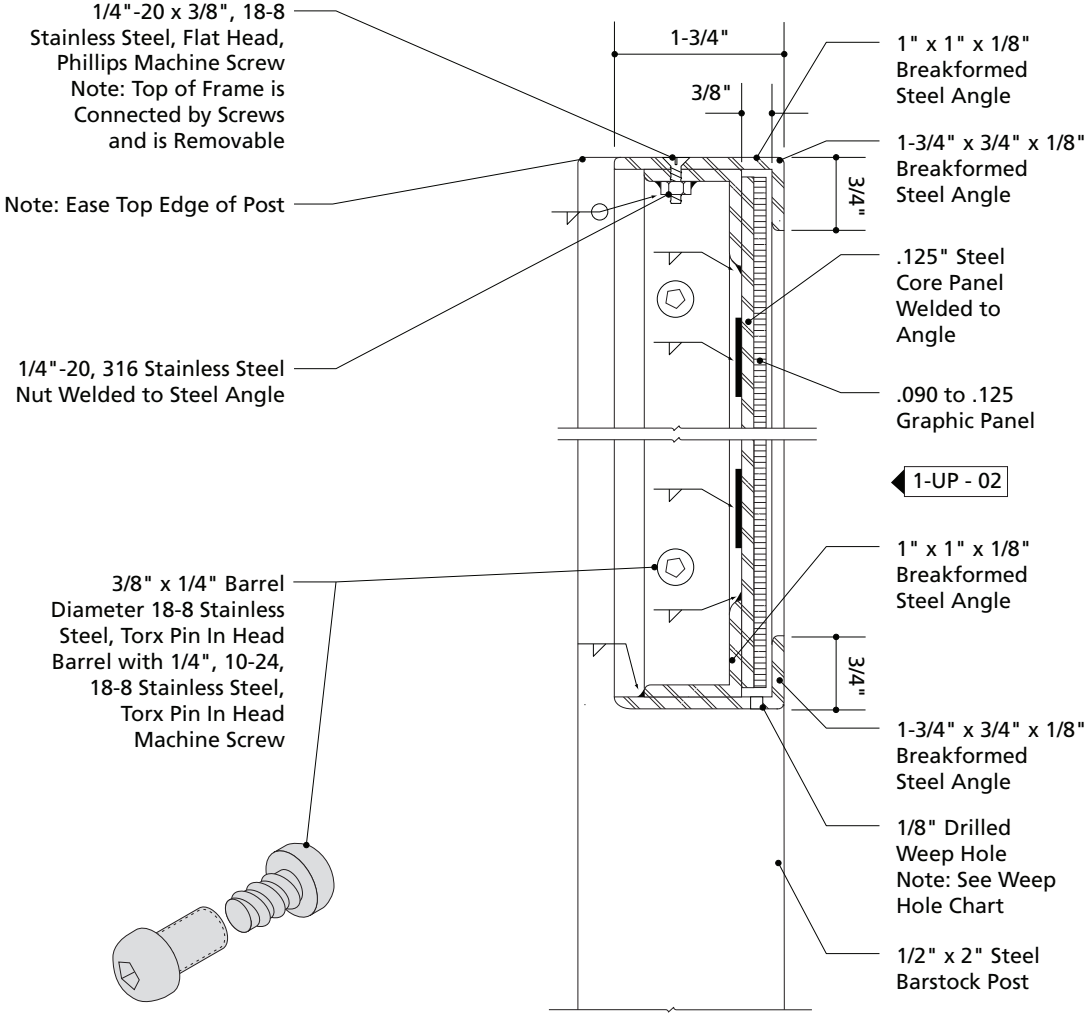

2-UP - 01 Side Section Cut

Scale: 1/2 Actual Size

UP - 01

Upright Series (UP): Barstock Post

Single-sided Steel Fabrication (Continued)

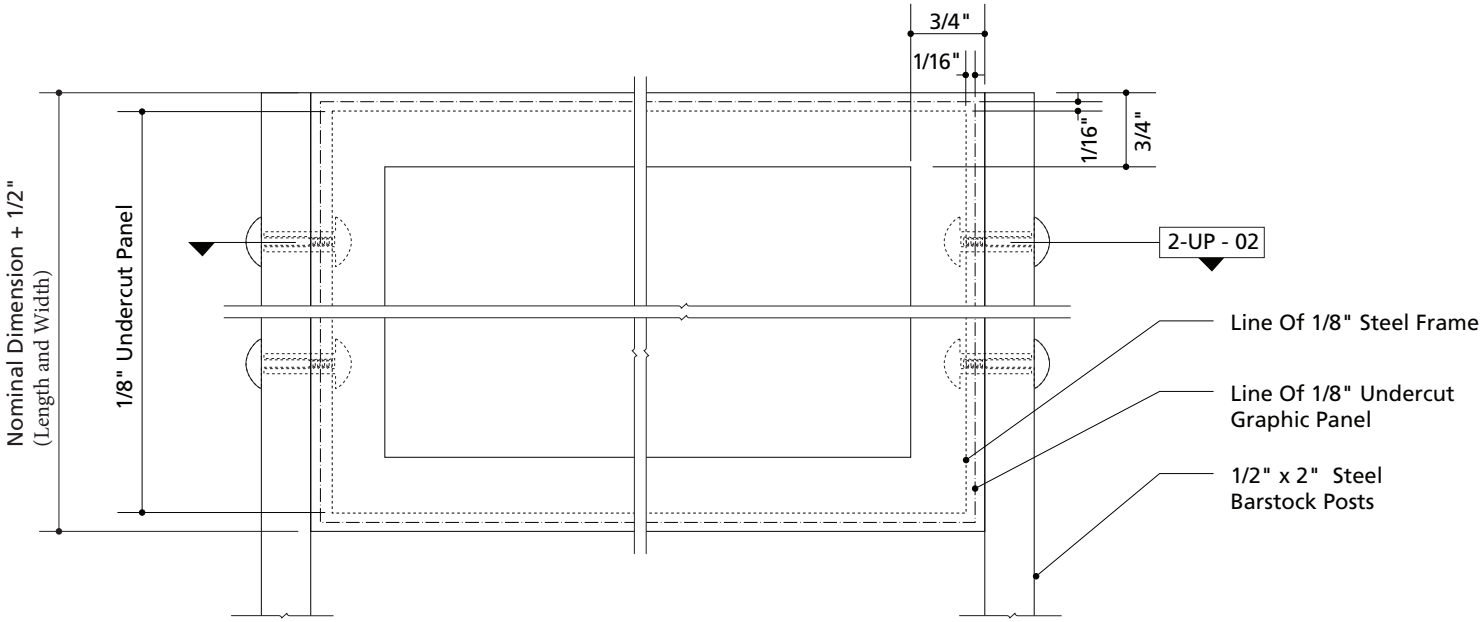

1-UP - 02 Frame Front Elevation

Scale: 1/2 Actual Size

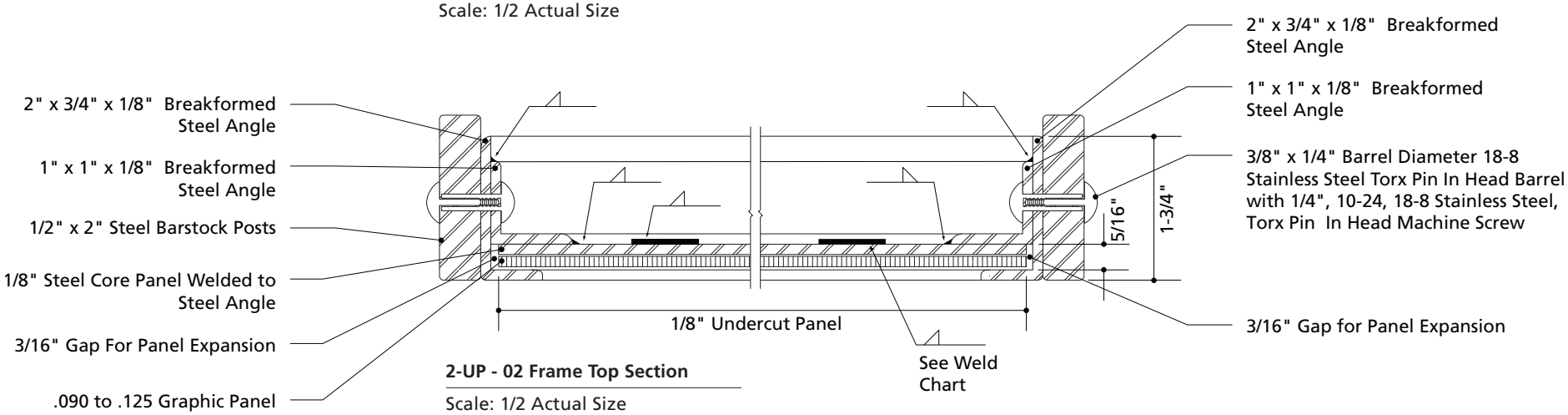

2-UP - 02 Frame Top Section

Scale: 1/2 Actual Size

UP - 02

Upright Series (UP): Barstock Post

Double-sided Steel Fabrication

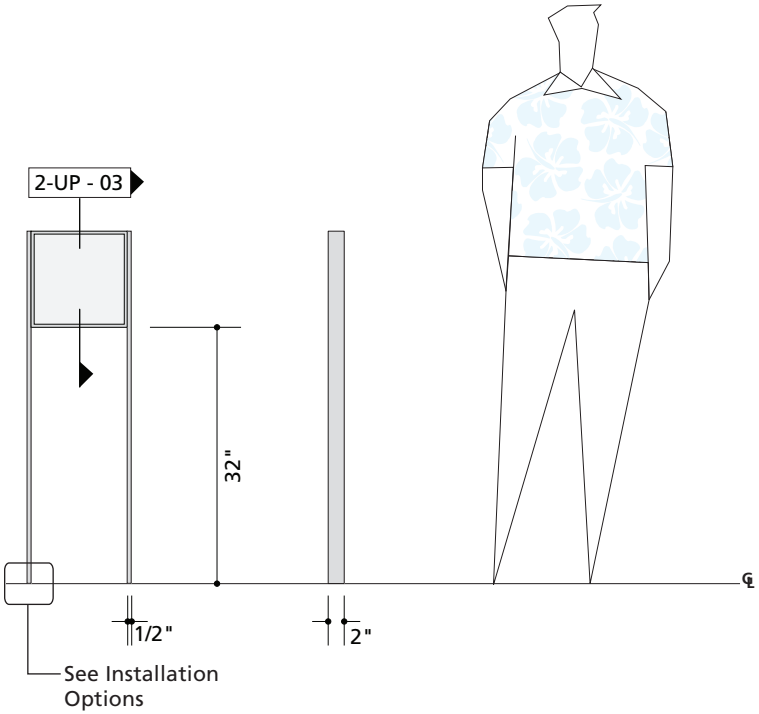

1-UP - 03 Upright Elevation

Scale: 1/2" = 1' -0"

General Note:
All breakformed steel and aluminum frame edges shall be eased to prevent sharp edges and allow paint adherence.

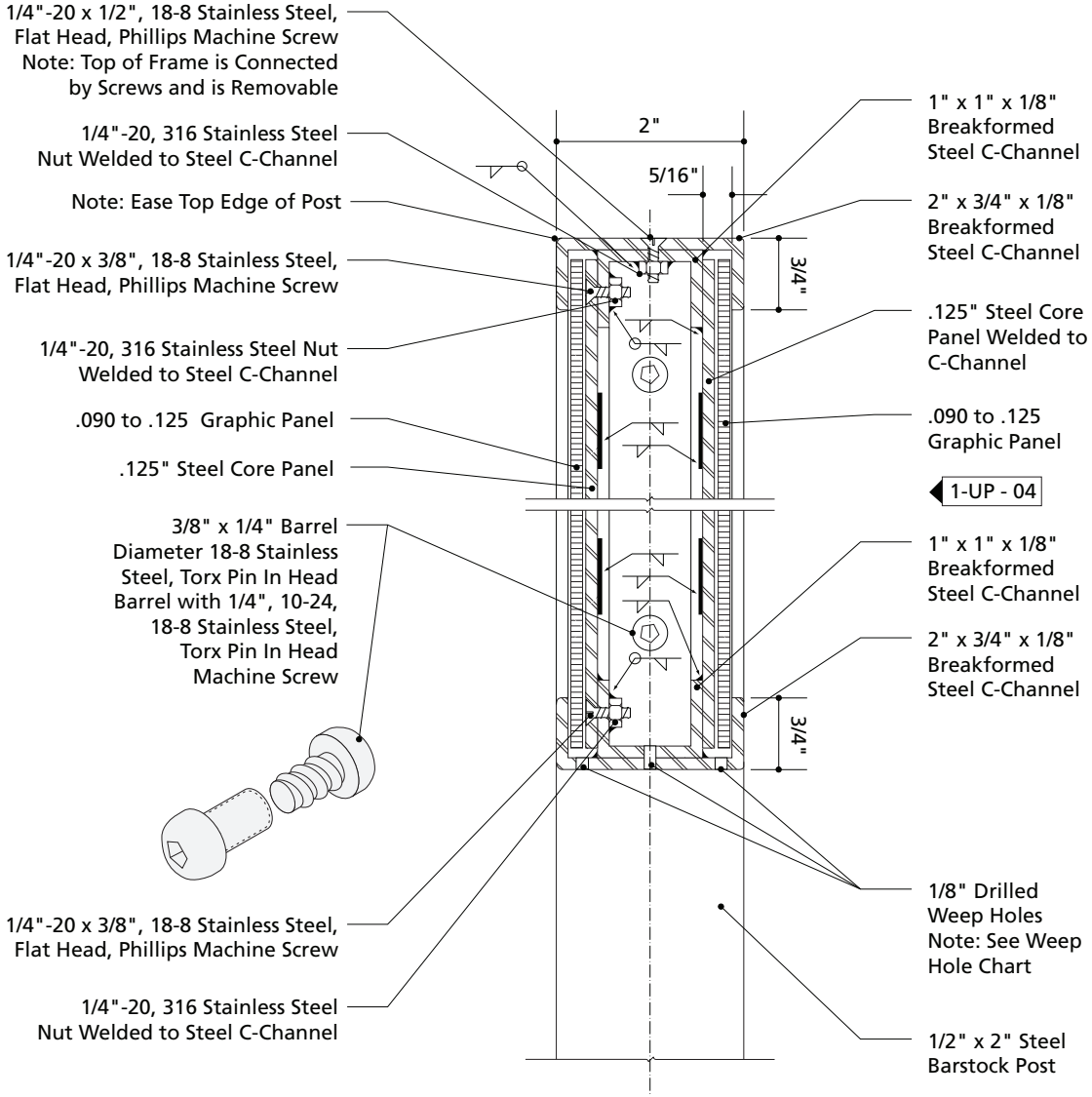

2-UP - 03 Side Section Cut

Scale: 1/2 Actual Size

UP - 03

Upright Series (UP): Barstock Post

Double-sided Steel Fabrication (Continued)

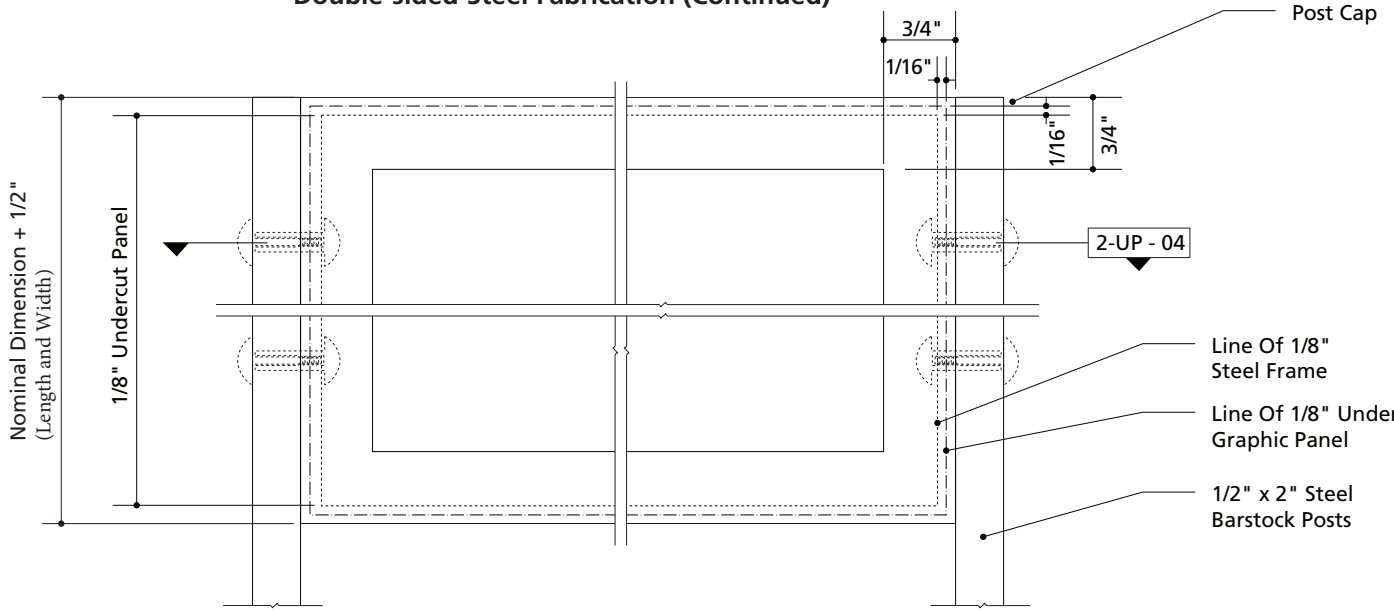

1-UP - 04 Frame Front Elevation

Scale: 1/2 Actual Size

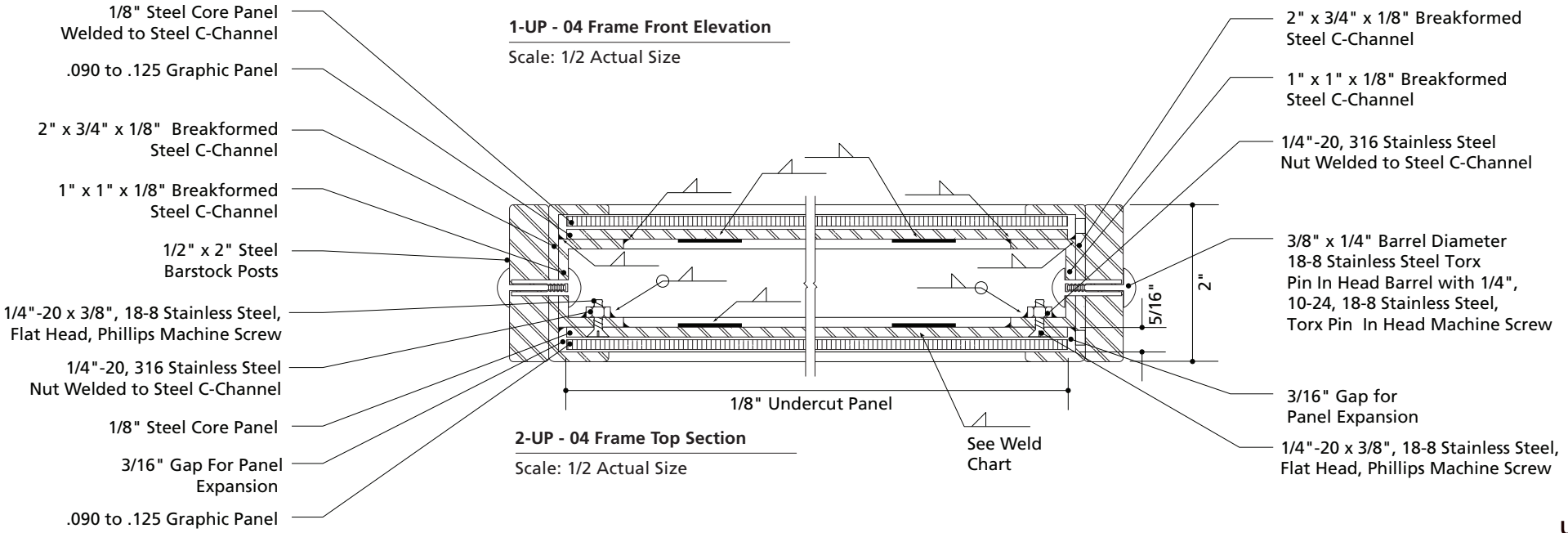

2-UP - 04 Frame Top Section

Scale: 1/2 Actual Size

UP - 04

Upright Series (UP): Barstock Post

Single-sided Aluminum Fabrication

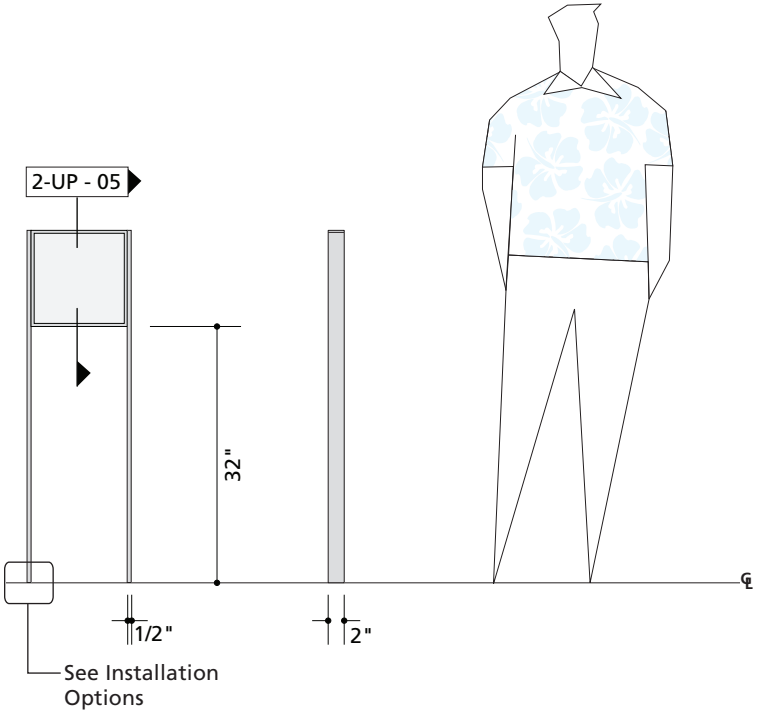

1-UP - 05 Upright Elevation

Scale: 1/2" = 1' -0"

General Note:
All breakformed steel and aluminum frame edges shall be eased to prevent sharp edges and allow paint adherence.

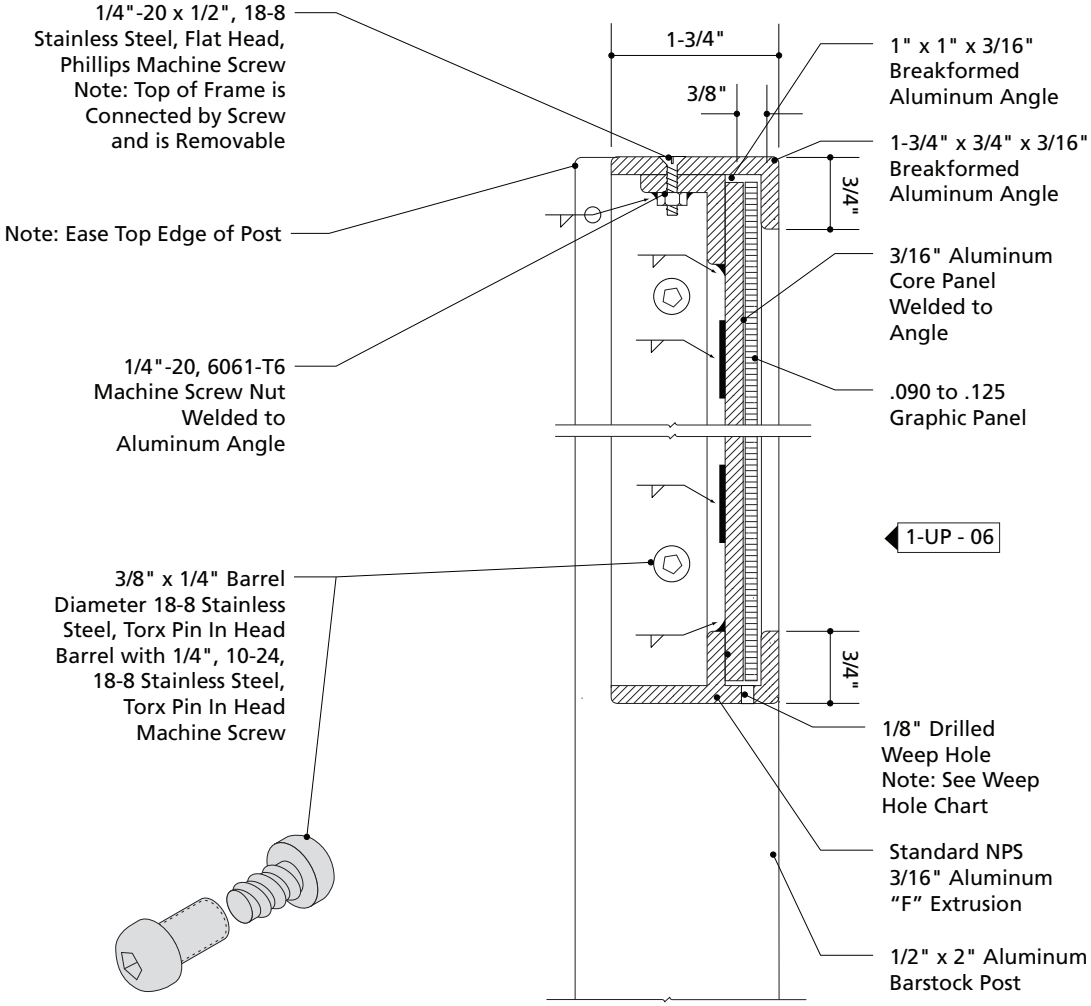

2-UP - 05 Side Section Cut

Scale: 1/2 Actual Size

UP - 05

Upright Series (UP): Barstock Post

Single-sided Aluminum Fabrication (Continued)

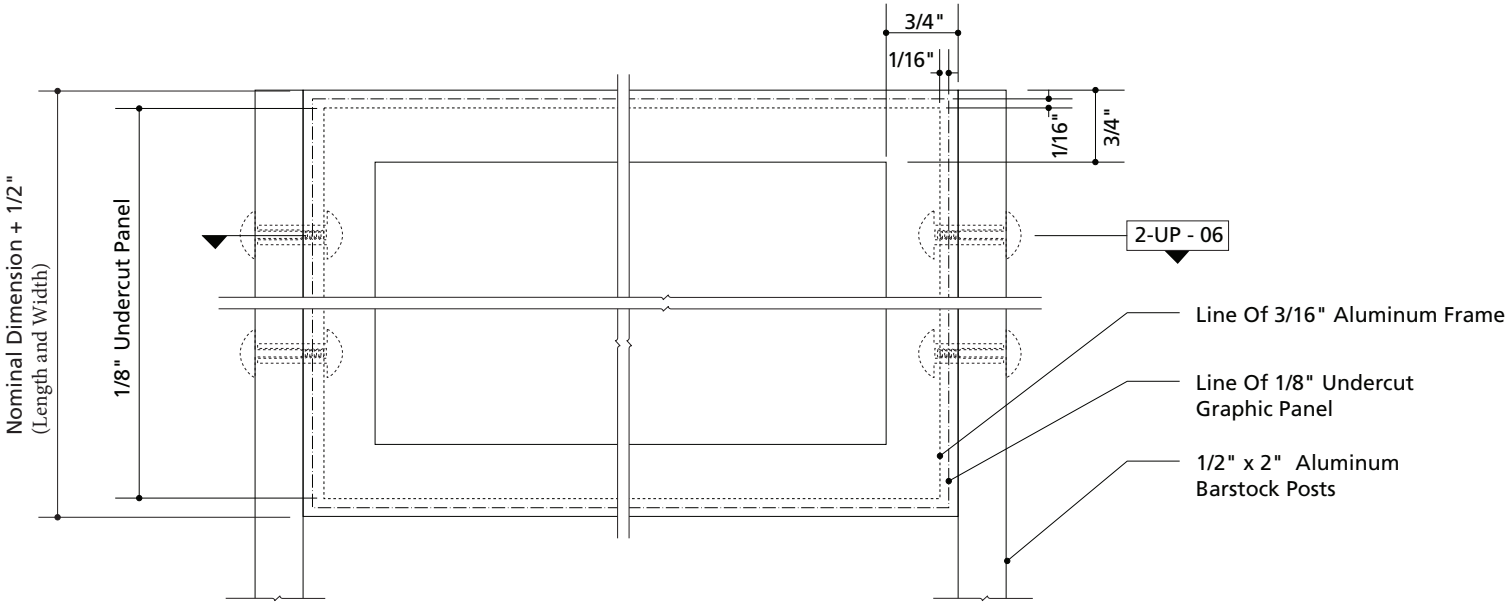

1-UP - 06 Frame Front Elevation

Scale: 1/2 Actual Size

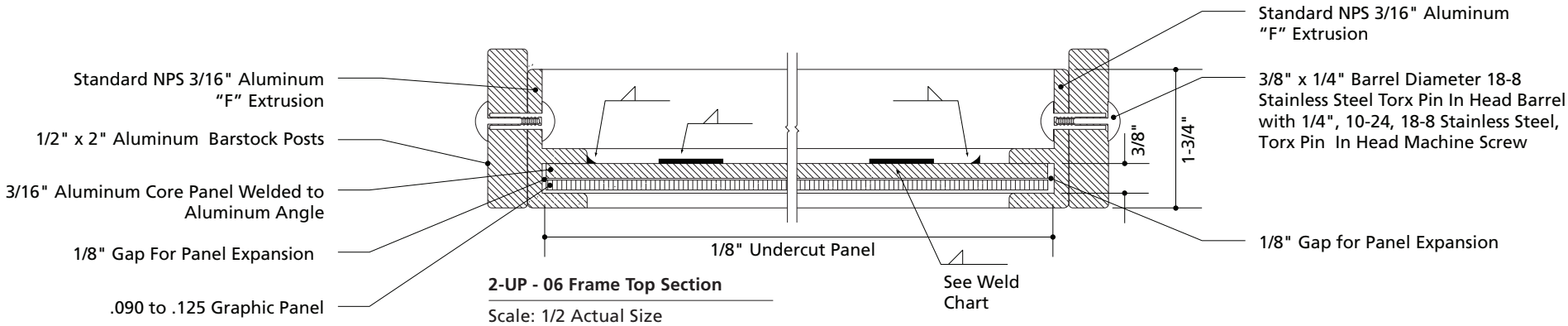

2-UP - 06 Frame Top Section

Scale: 1/2 Actual Size

UP - 06

Upright Series (UP): Barstock Post

Double-sided Aluminum Fabrication

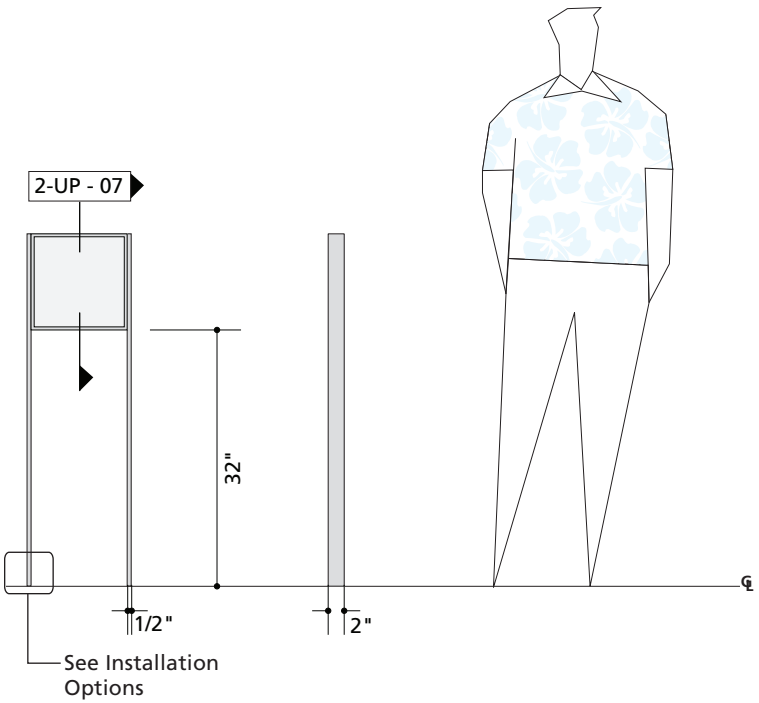

1-UP - 07 Upright Elevation

Scale: 1/2" = 1' -0"

General Note:
All breakformed steel and aluminum frame edges shall be eased to prevent sharp edges and allow paint adherence.

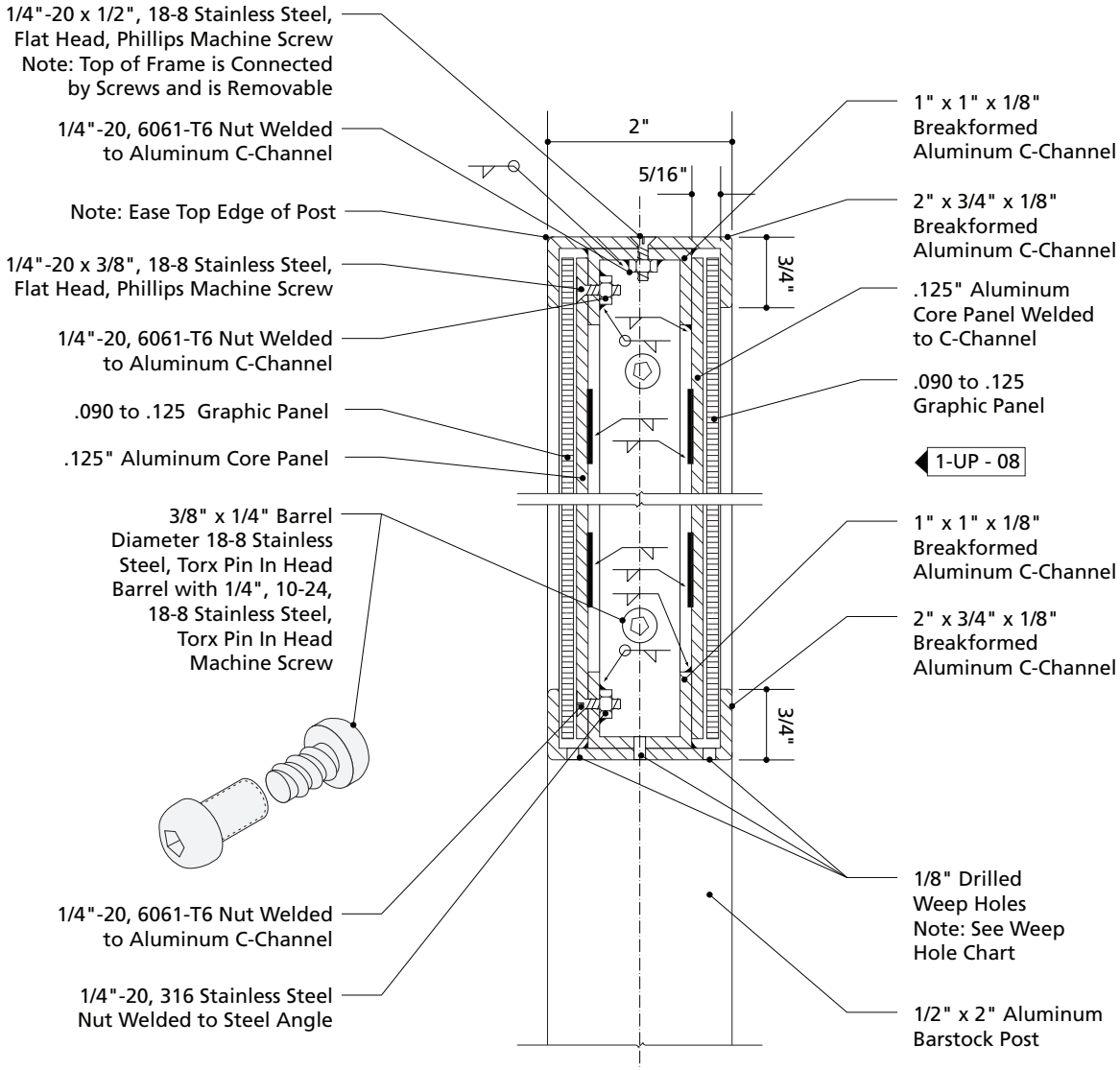

2-UP - 07 Side Section Cut

Scale: 1/2 Actual Size

UP - 07

Upright Series (UP): Barstock Post

Double-sided Aluminum Fabrication (Continued)

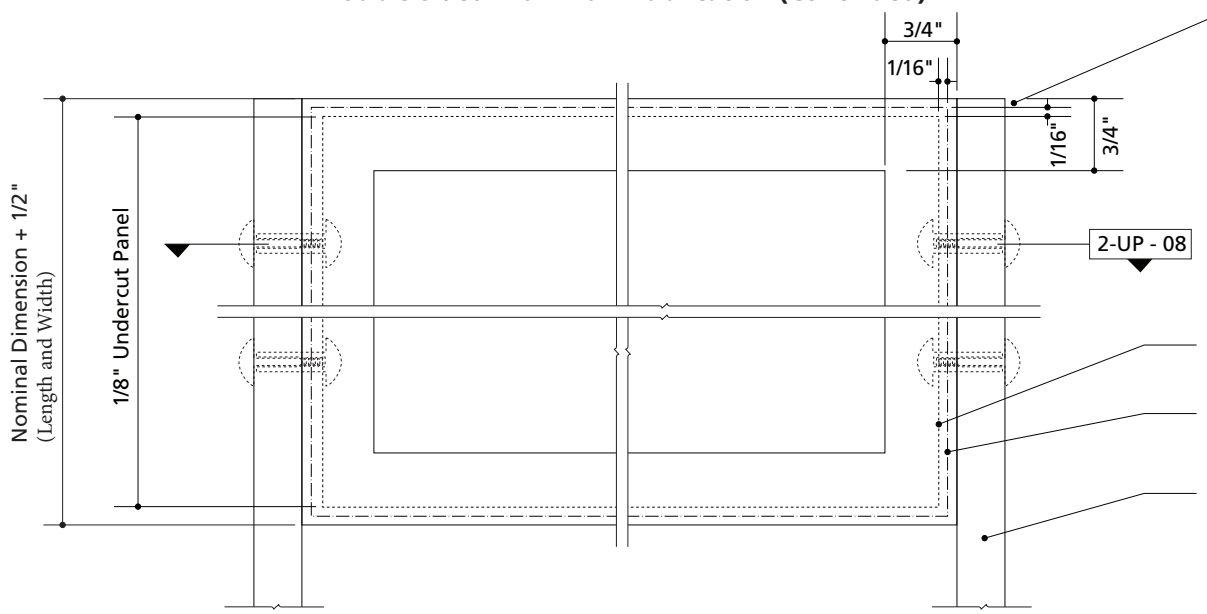

1-UP - 08 Frame Front Elevation

Scale: 1/2 Actual Size

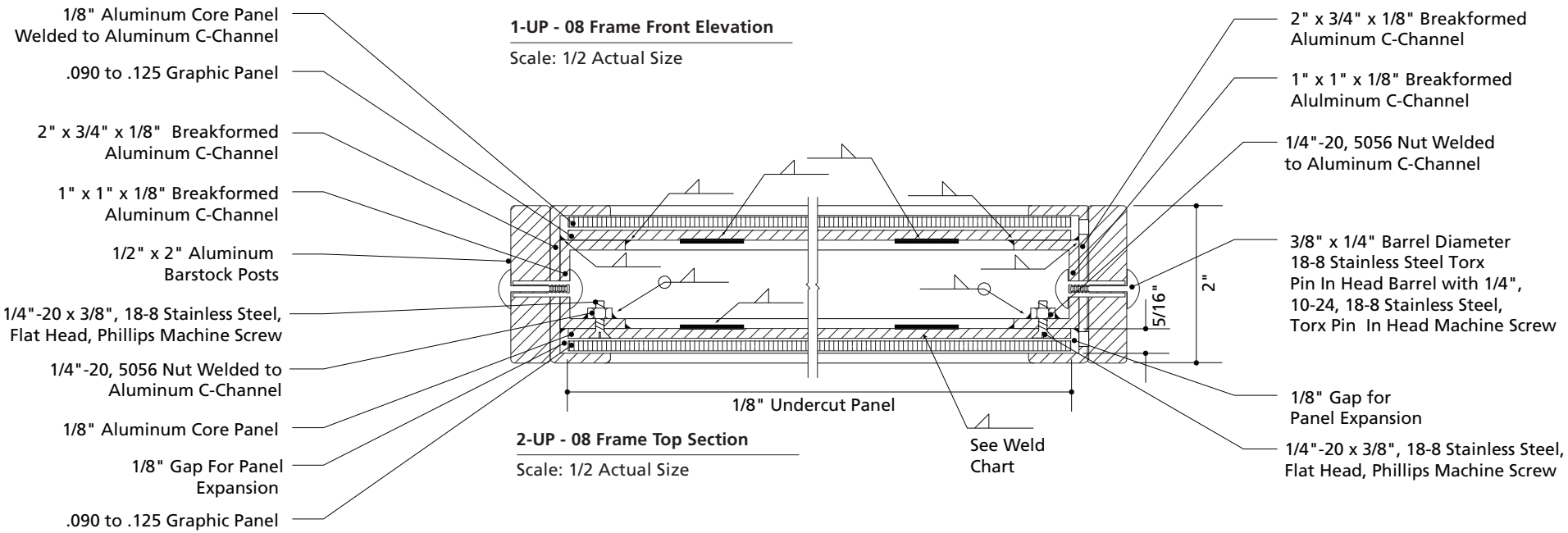

2-UP - 08 Frame Top Section

Scale: 1/2 Actual Size

UP - 08

Upright Series (UP): 2" x 2" Post

Single-sided Steel Fabrication

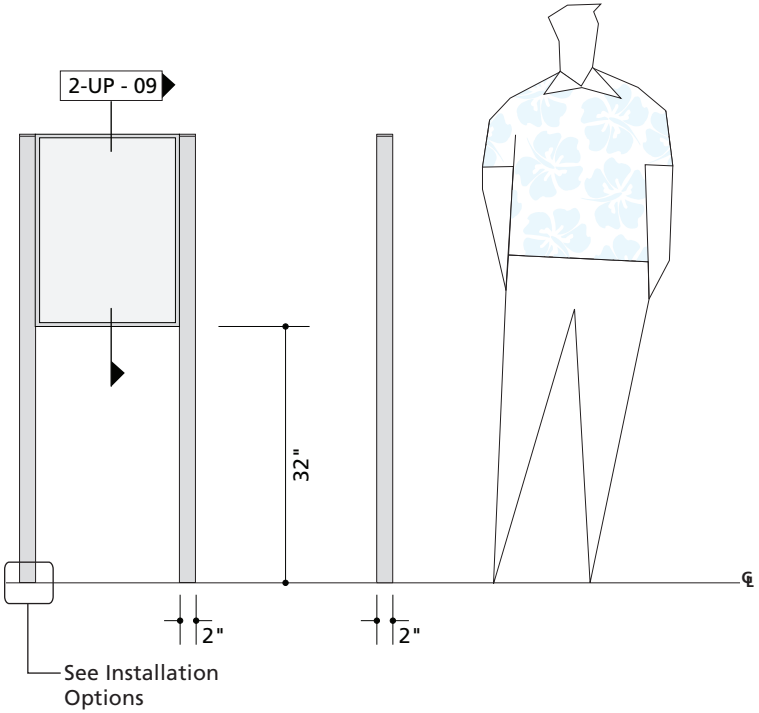

1-UP - 09 Upright Elevation

Scale: 1/2" = 1' -0"

General Note:
All breakformed steel and aluminum frame edges shall be eased to prevent sharp edges and allow paint adherence.

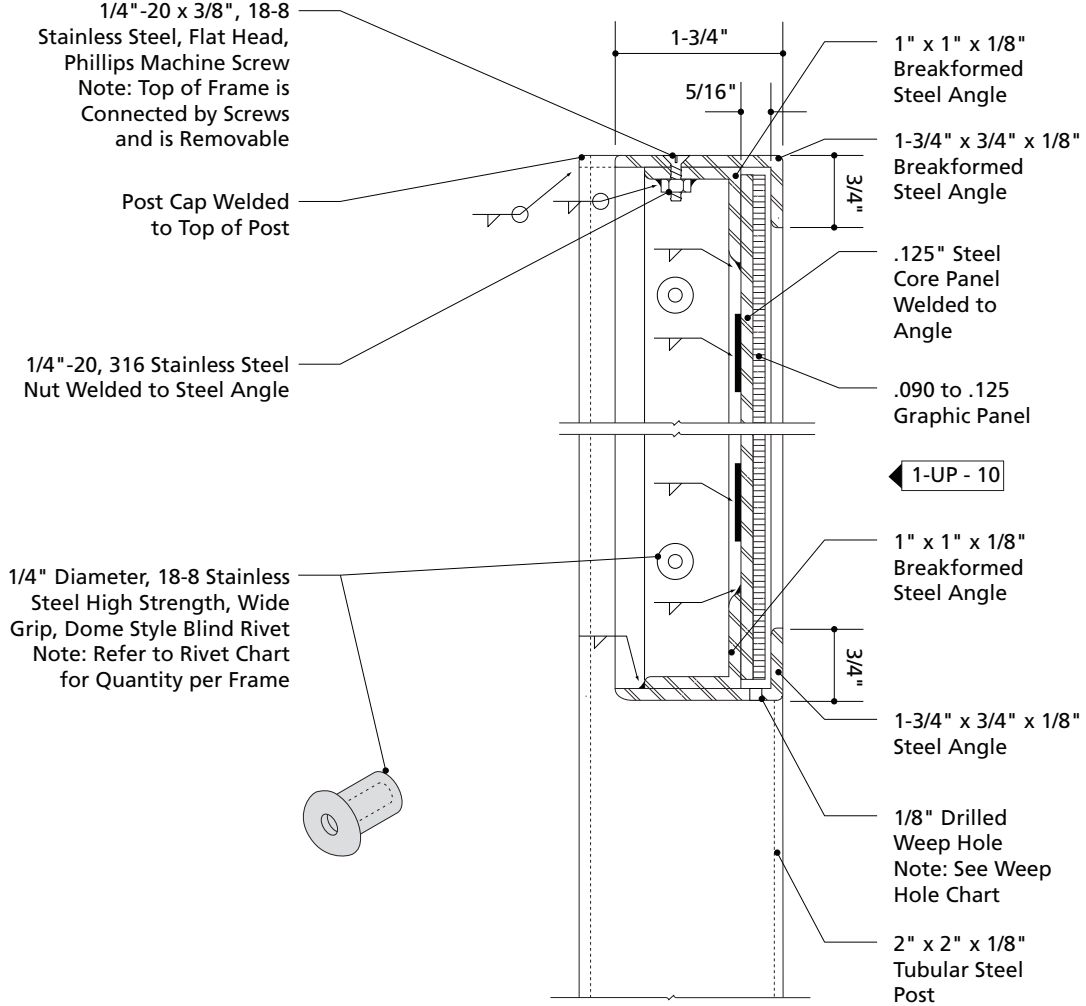

2-UP - 09 Side Section Cut

Scale: 1/2 Actual Size

UP - 09

Upright Series (UP): 2" x 2" Post

Single-sided Steel Fabrication (Continued)

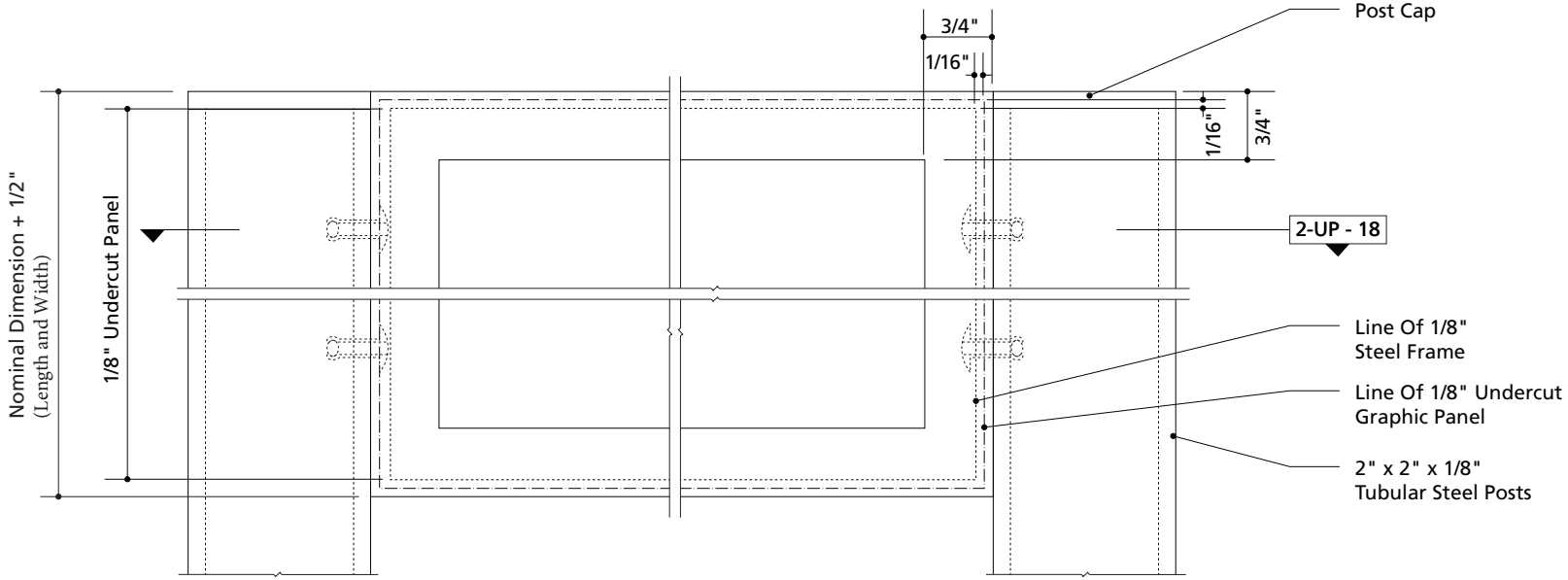

1-UP - 18 Frame Front Elevation

Scale: 1/2 Actual Size

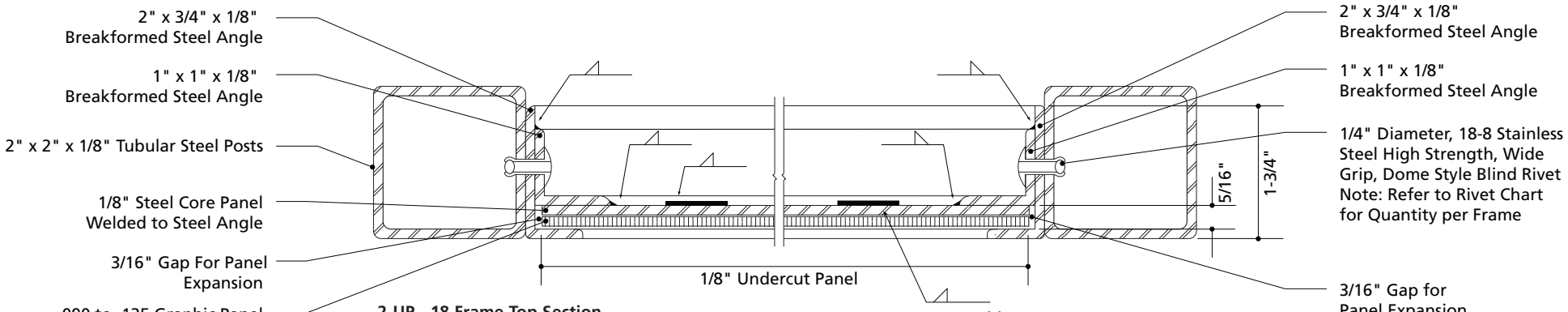

2-UP - 18 Frame Top Section

Scale: 1/2 Actual Size

UP - 10

Upright Series (UP): 2" x 2" Post

Double-sided Steel Fabrication

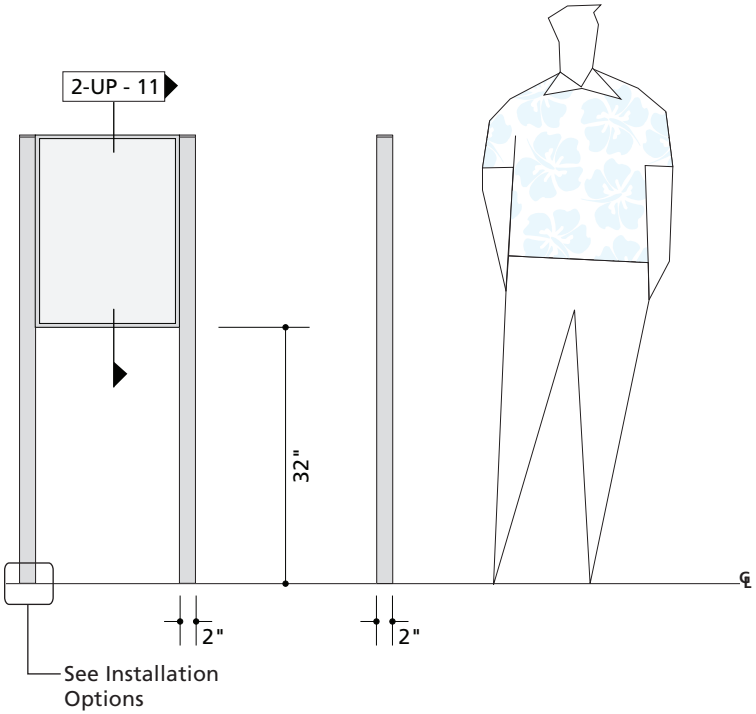

1-UP - 11 Upright Elevation

Scale: 1/2" = 1' -0"

General Note:
All breakformed steel and aluminum frame edges shall be eased to prevent sharp edges and allow paint adherence.

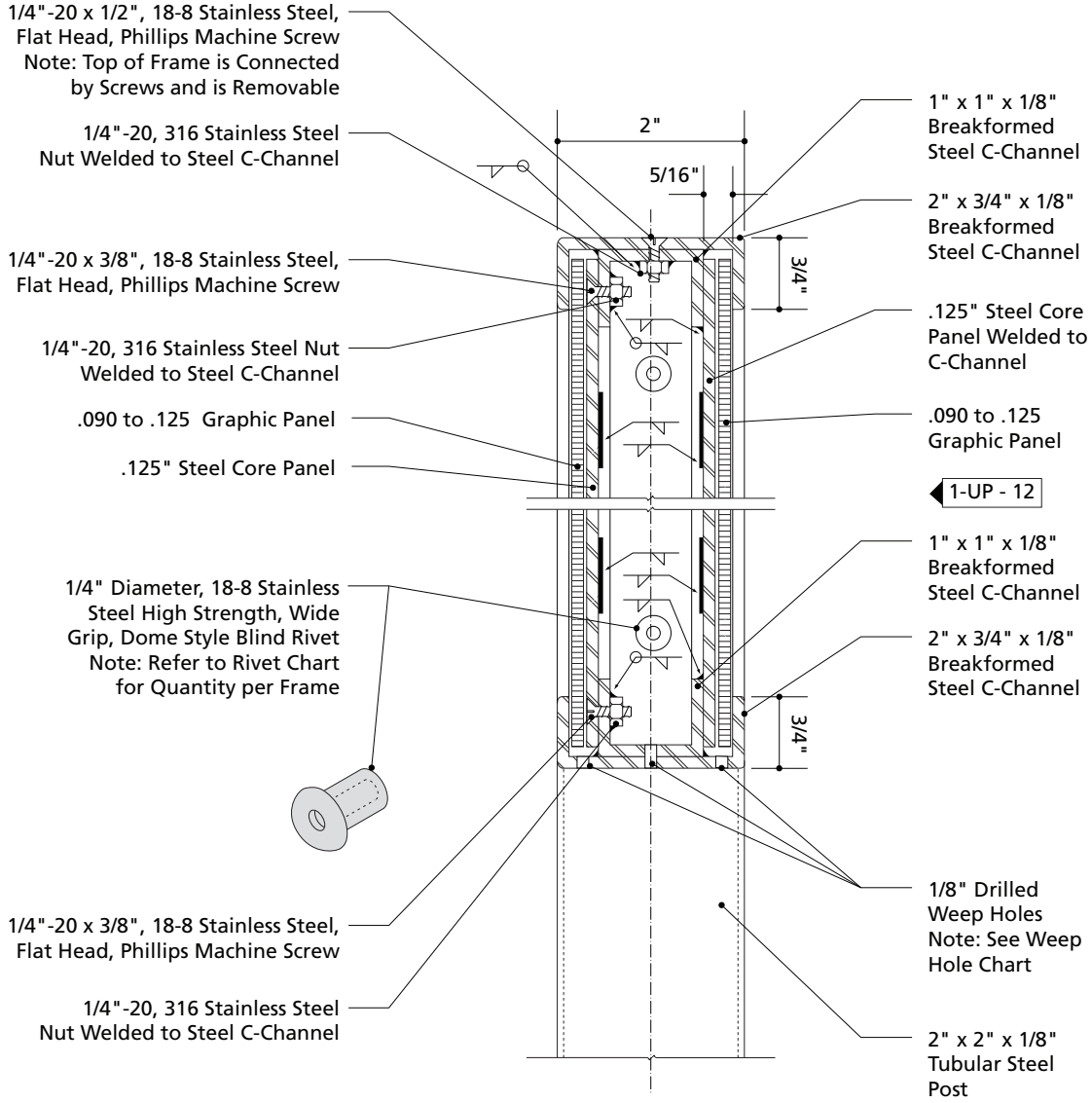

2-UP - 11 Side Section Cut

Scale: 1/2 Actual Size

UP - 11

Upright Series (UP): 2" x 2" Post

Double-sided Steel Fabrication (Continued)

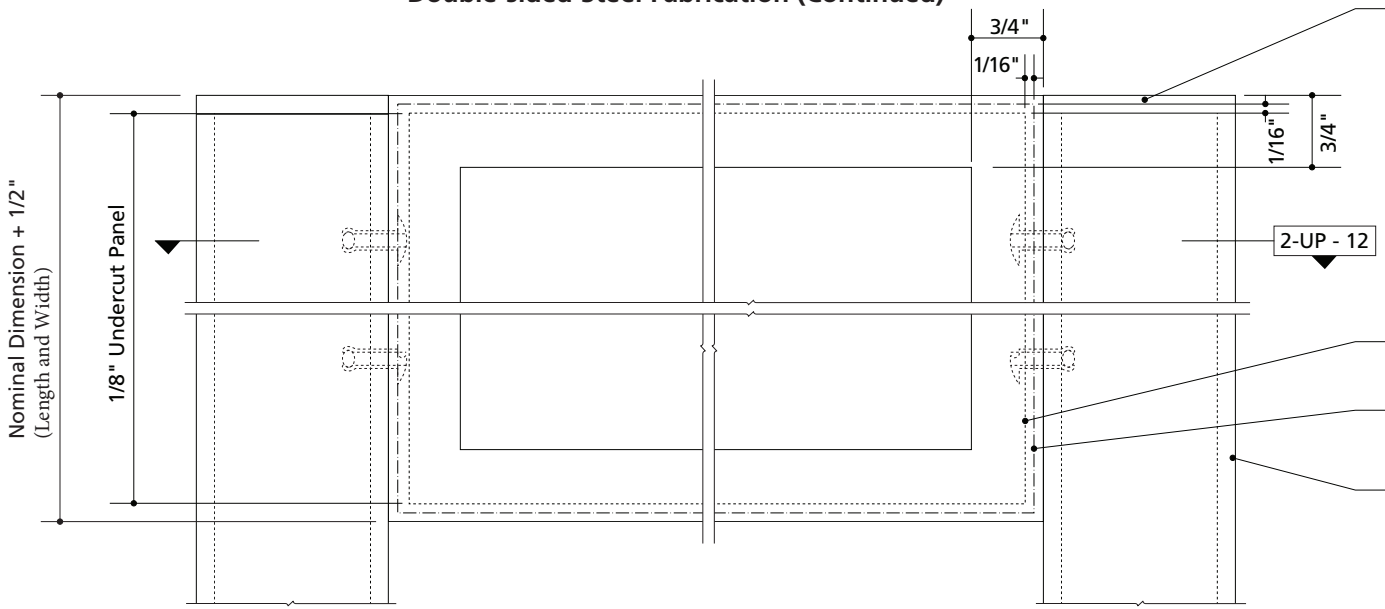

1-UP - 12 Frame Front Elevation

Scale: 1/2 Actual Size

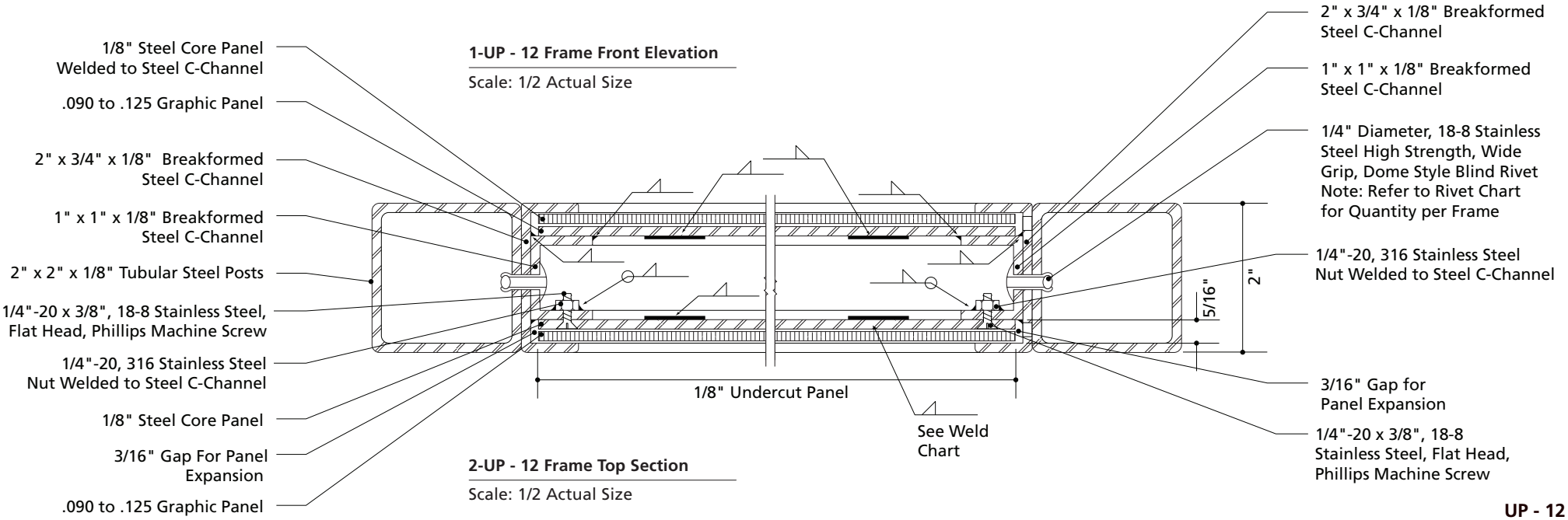

2-UP - 12 Frame Top Section

Scale: 1/2 Actual Size

UP - 12

Upright Series (UP): 2" x 2" Post

Single-sided Aluminum Fabrication

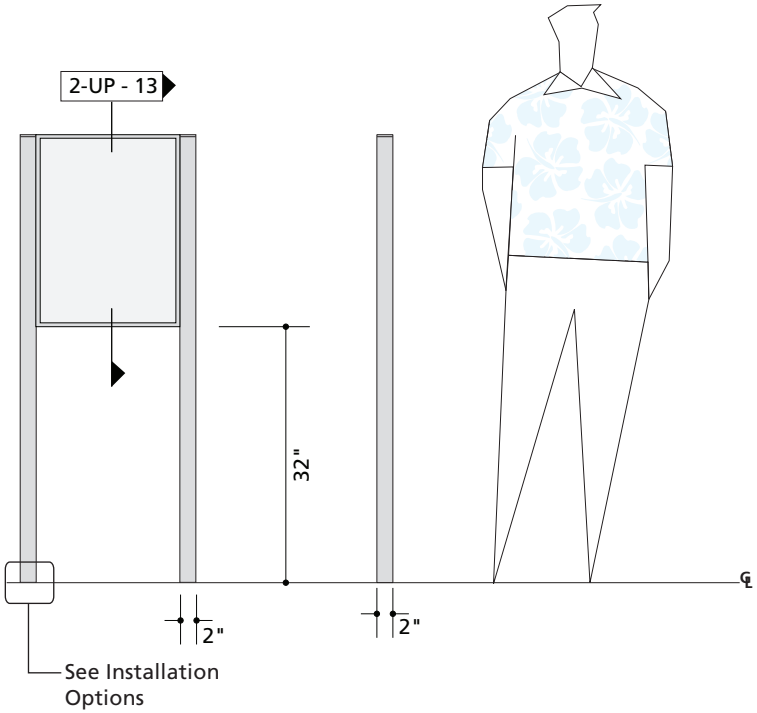

1-UP - 13 Upright Elevation

Scale: 1/2" = 1' -0"

General Note:
All breakformed steel and aluminum frame edges shall be eased to prevent sharp edges and allow paint adherence.

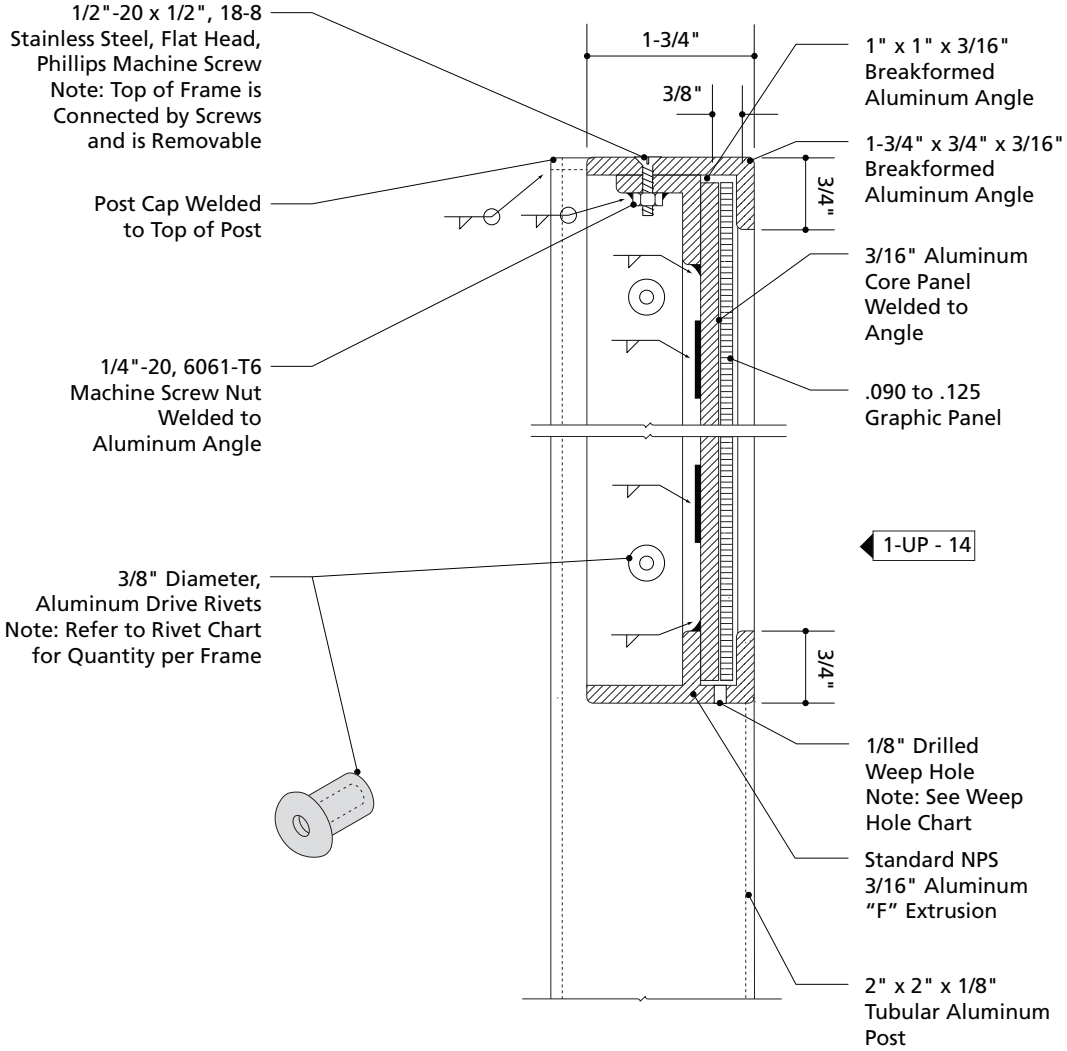

2-UP - 13 Side Section Cut

Scale: 1/2 Actual Size

UP - 13

Upright Series (UP): 2" x 2" Post

Single-sided Aluminum Fabrication (Continued)

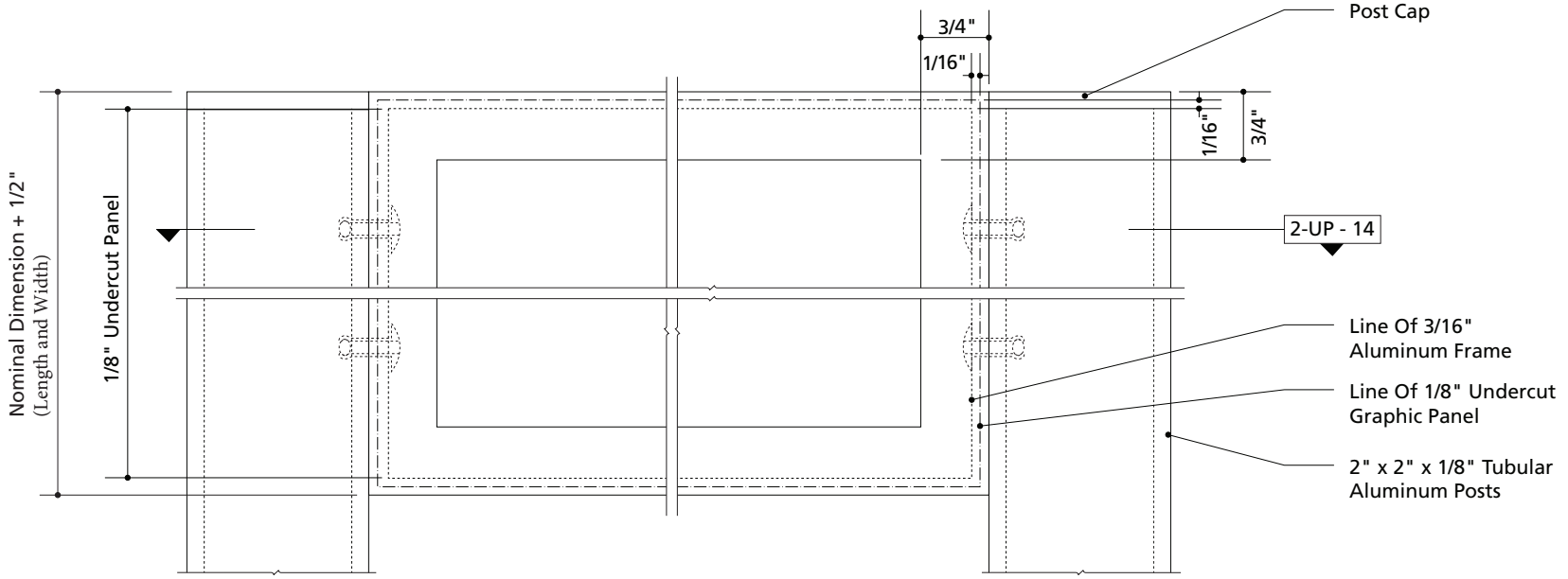

1-UP - 14 Frame Front Elevation

Scale: 1/2 Actual Size

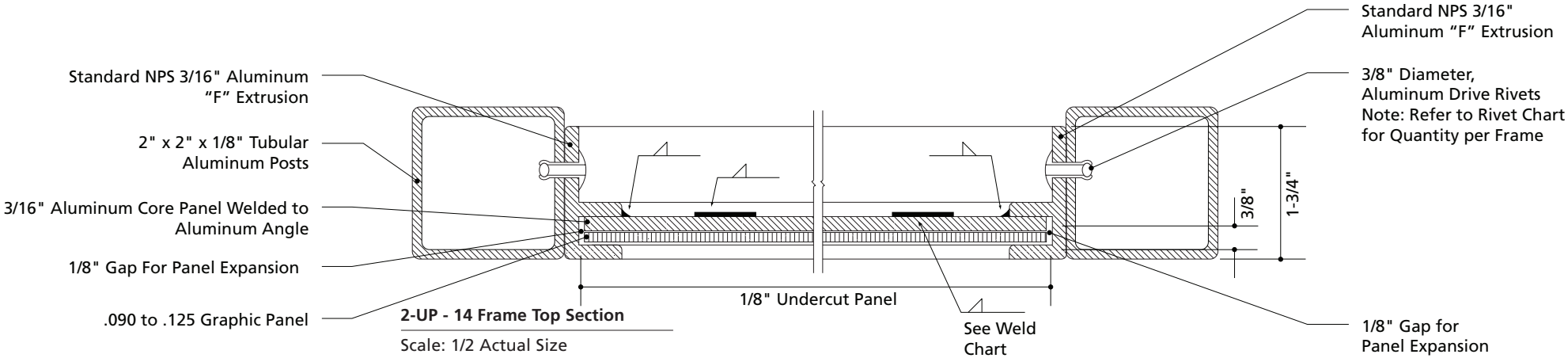

2-UP - 14 Frame Top Section

Scale: 1/2 Actual Size

UP - 14

Upright Series (UP): 2" x 2" Post

Double-sided Aluminum Fabrication

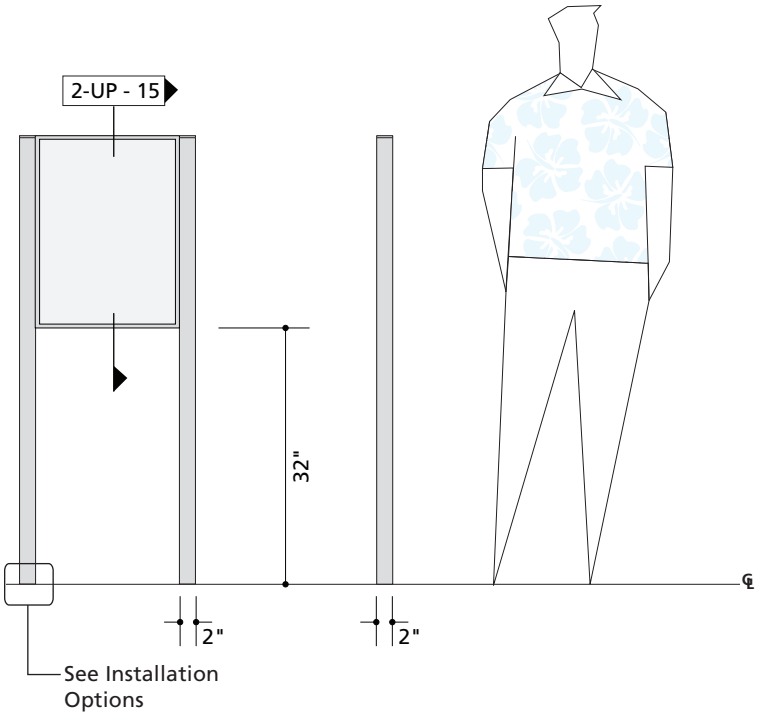

1-UP - 15 Upright Elevation

Scale: 1/2" = 1' -0"

General Note:
All breakformed steel and aluminum frame edges shall be eased to prevent sharp edges and allow paint adherence.

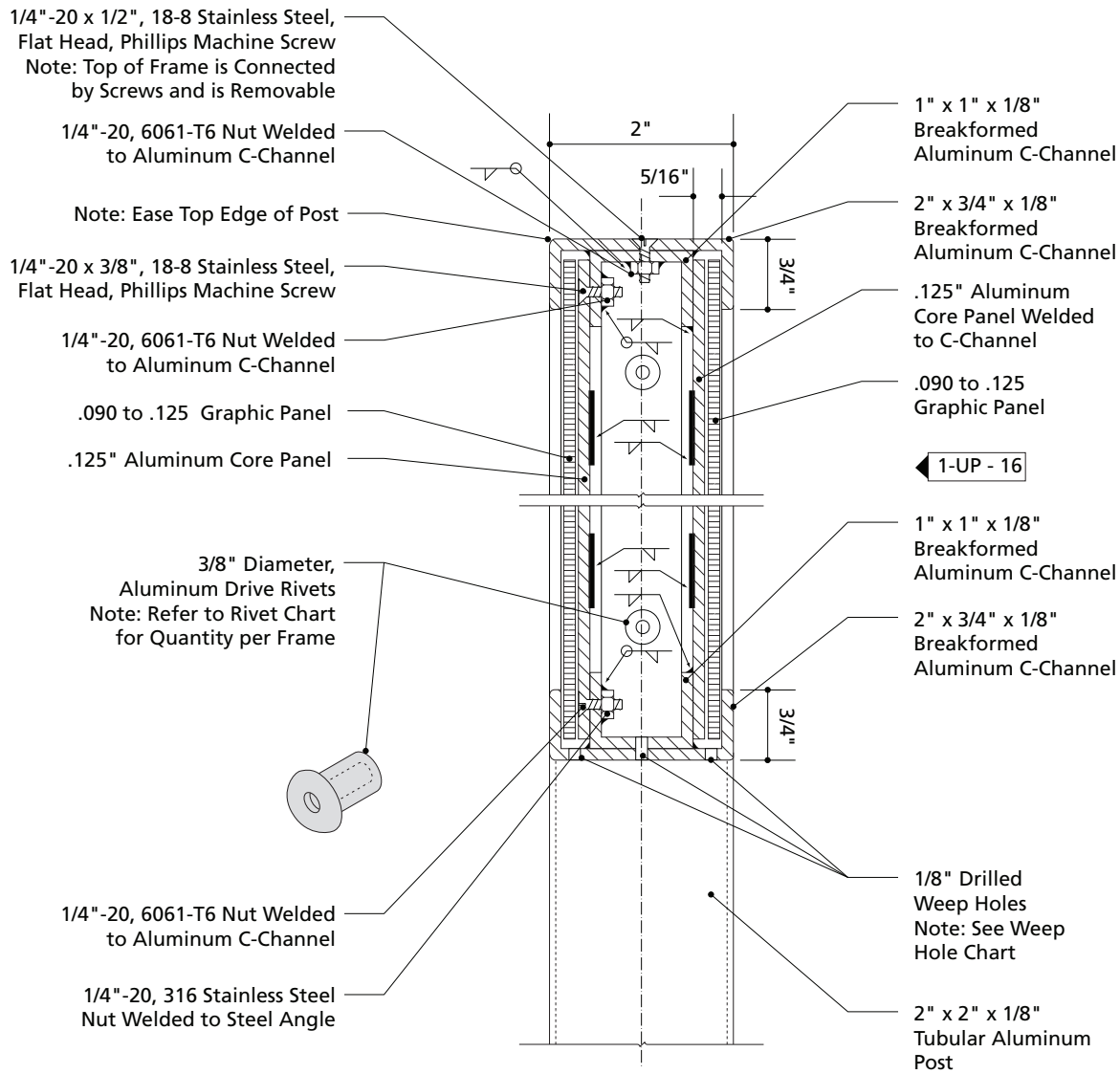

2-UP - 15 Side Section Cut

Scale: 1/2 Actual Size

UP - 15

Upright Series (UP): 2" x 2" Post

Double-sided Aluminum Fabrication (Continued)

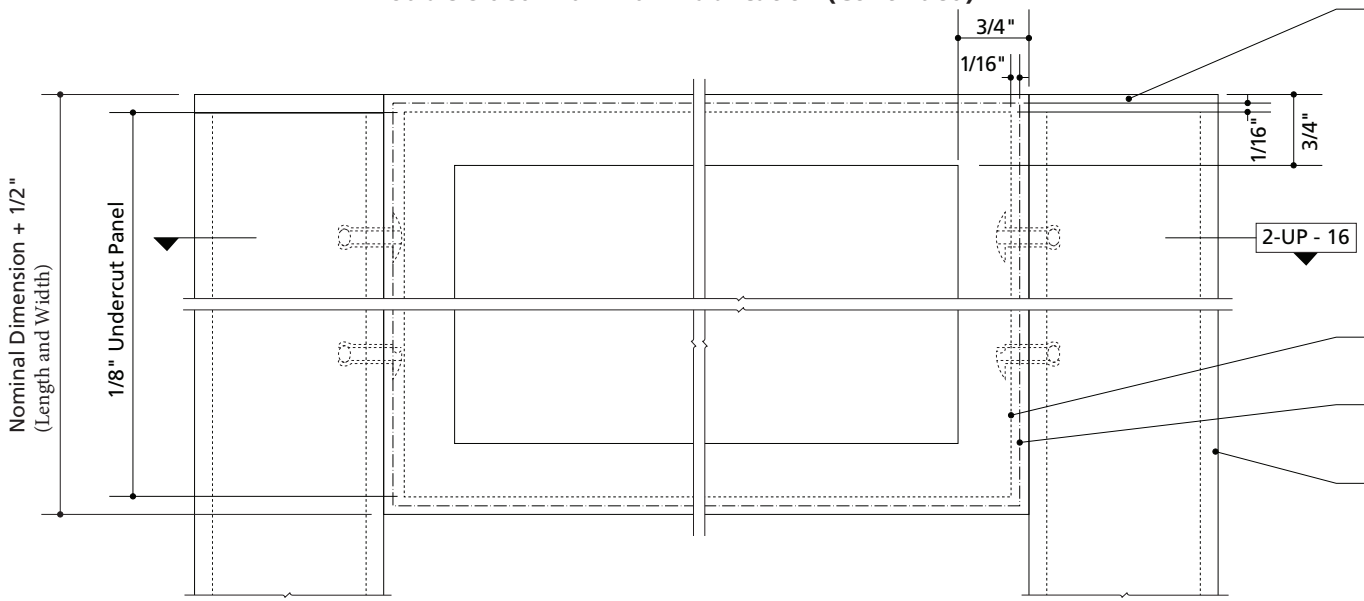

1-UP - 16 Frame Front Elevation

Scale: 1/2 Actual Size

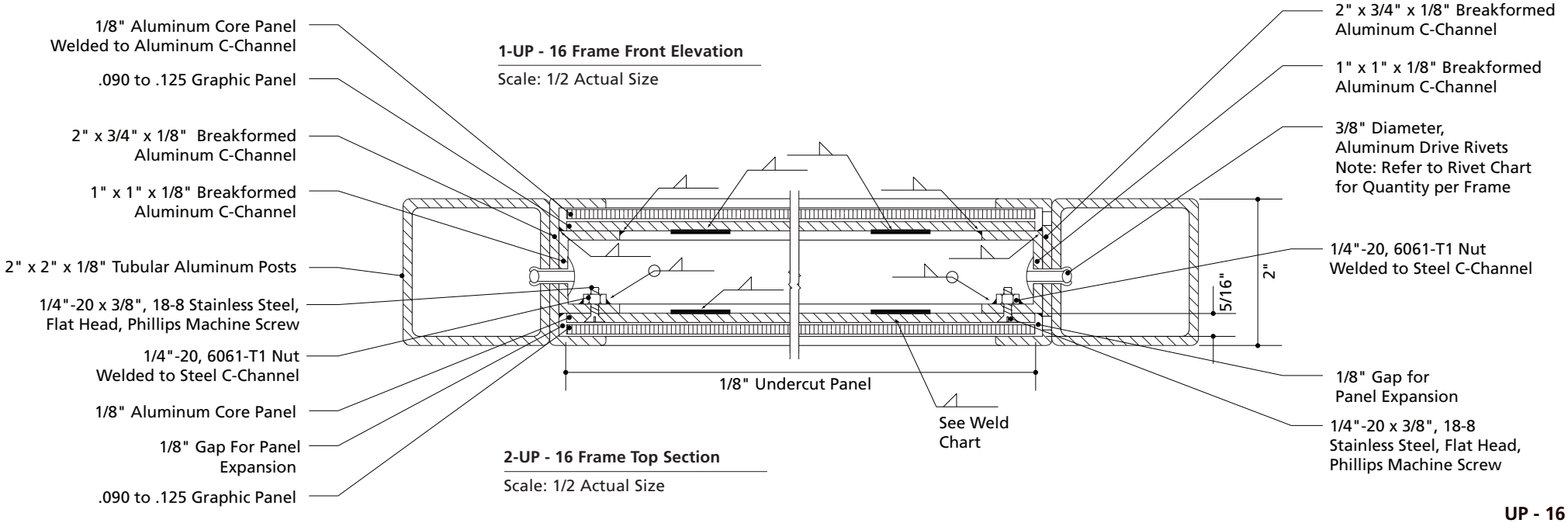

2-UP - 16 Frame Top Section

Scale: 1/2 Actual Size

UP - 16

Upright Series (UP): 2" x 3" Post

Single-sided Steel Fabrication

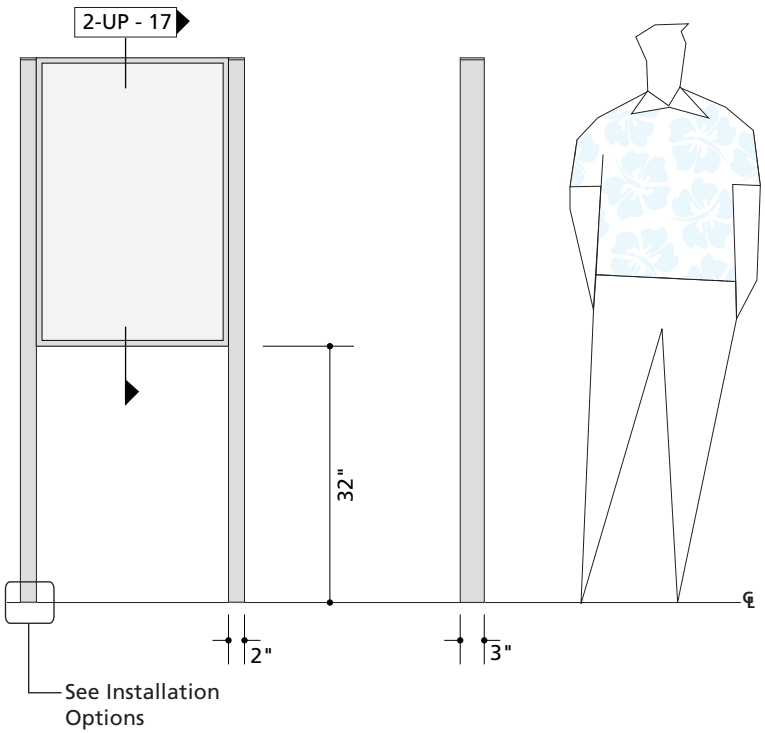

1-UP - 17 Upright Elevation

Scale: 1/2" = 1' -0"

General Note:
All breakformed steel and aluminum frame edges shall be eased to prevent sharp edges and allow paint adherence.

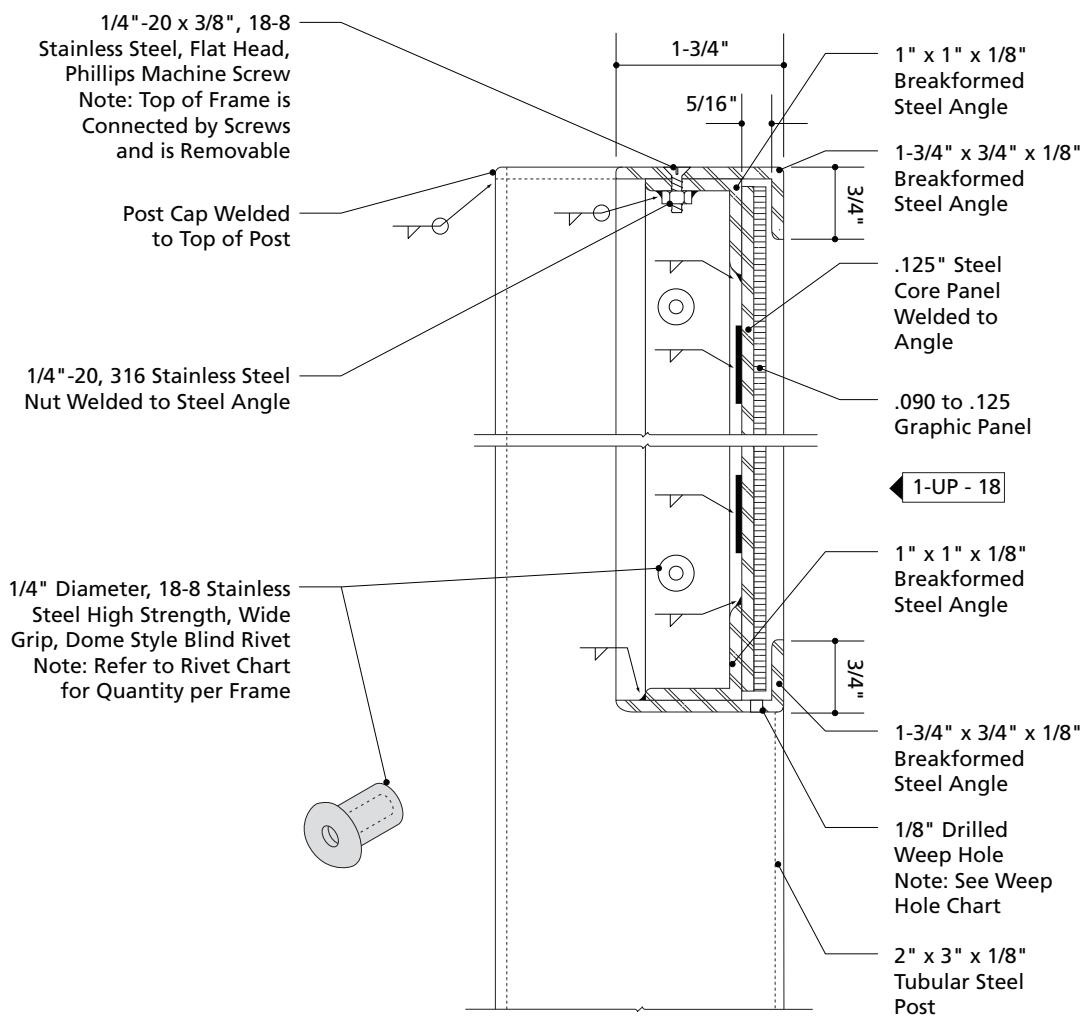

2-UP - 17 Side Section Cut

Scale: 1/2 Actual Size

UP - 17

Upright Series (UP): 2" x 3" Post

Single-sided Steel Fabrication (Continued)

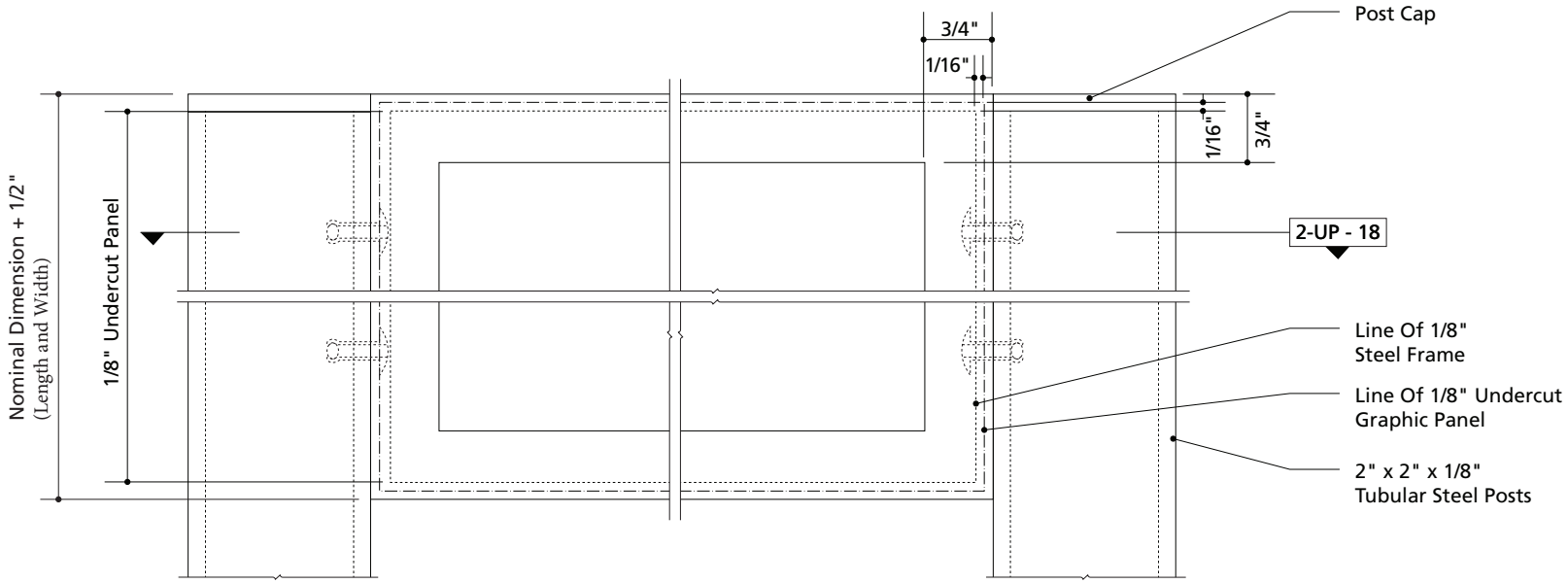

1-UP - 18 Frame Front Elevation

Scale: 1/2 Actual Size

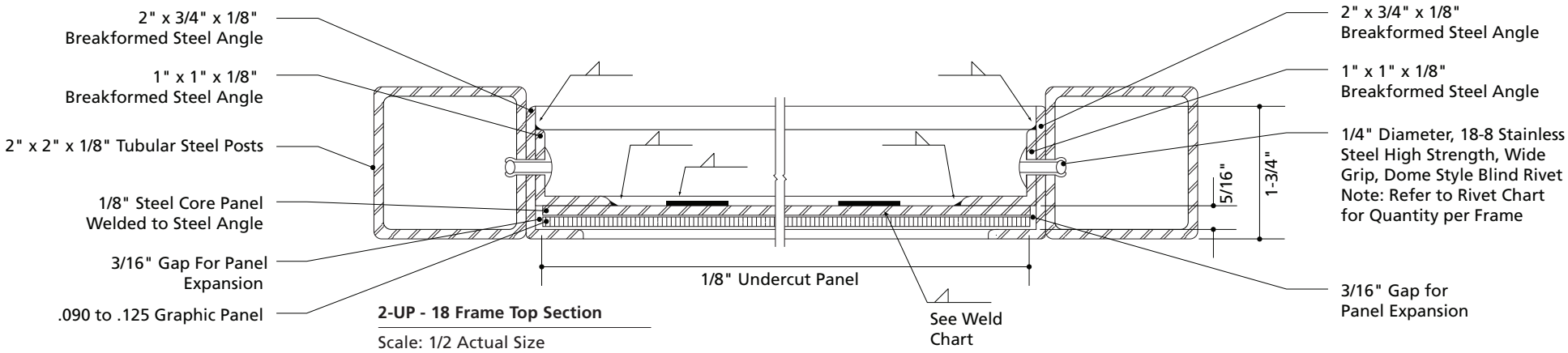

2-UP - 18 Frame Top Section

Scale: 1/2 Actual Size

Upright Series (UP): 2" x 3" Post

Double-sided Steel Fabrication

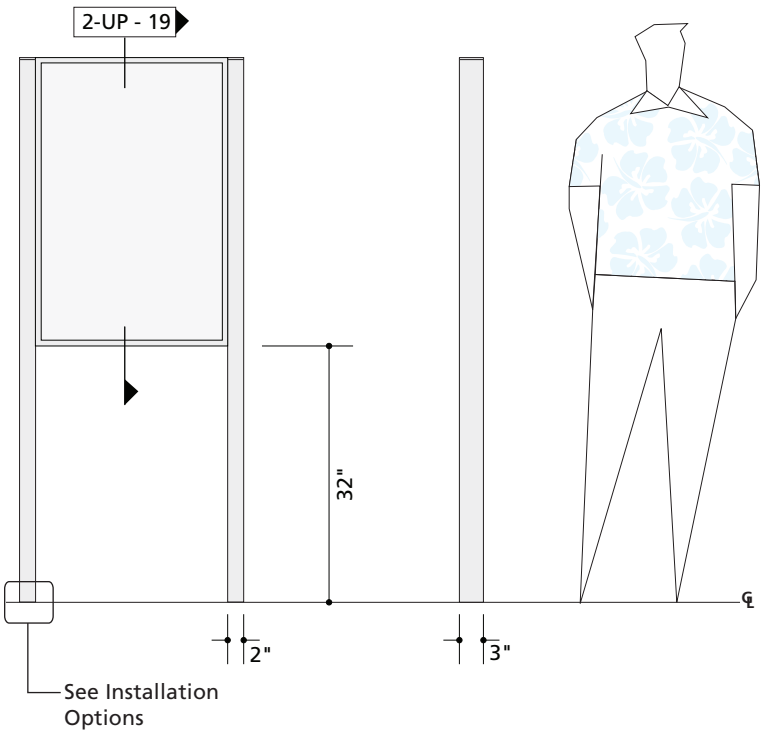

1-UP - 19 Upright Elevation

Scale: 1/2" = 1' -0"

General Note:
All breakformed steel and aluminum frame edges shall be eased to prevent sharp edges and allow paint adherence.

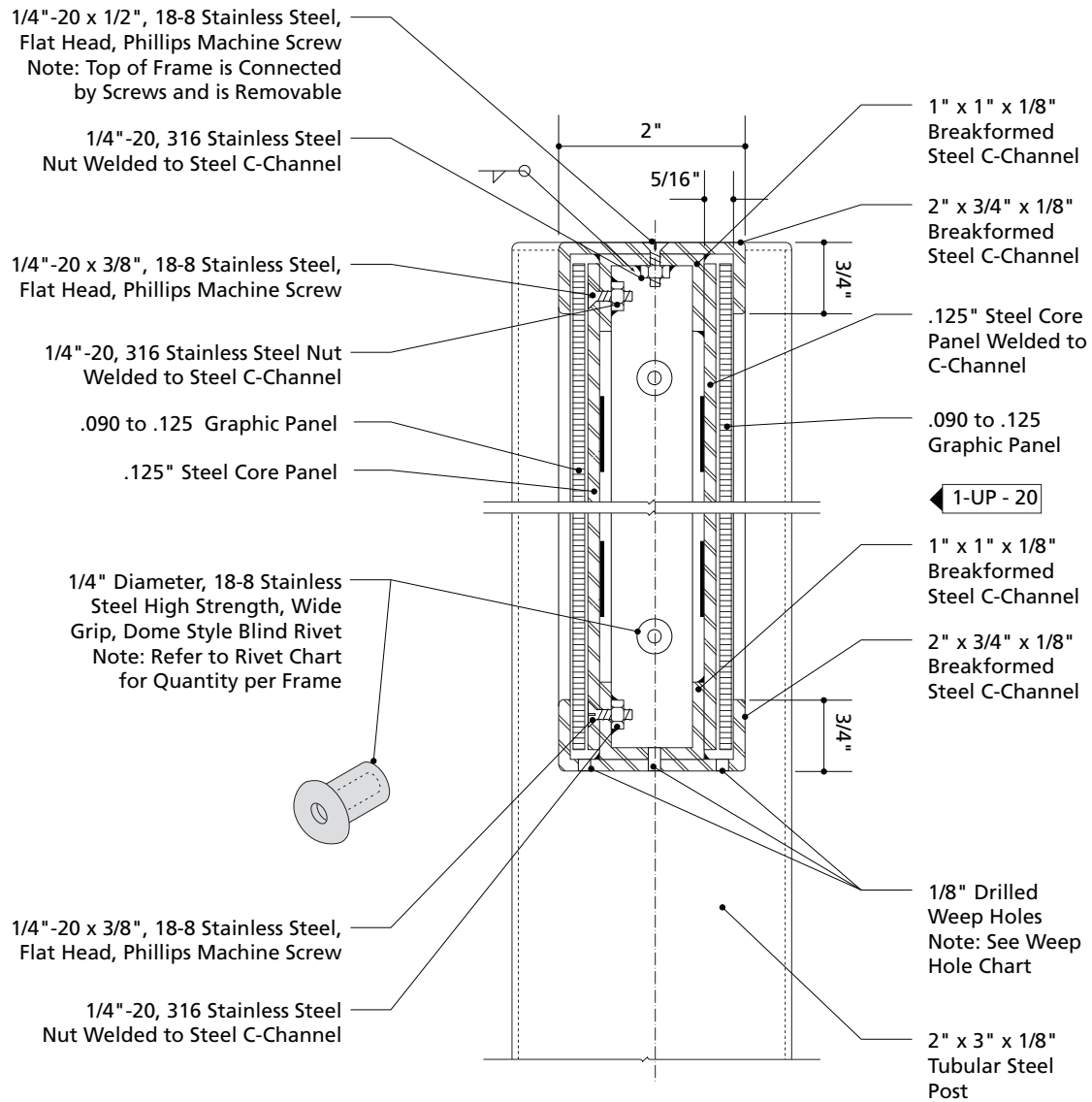

2-UP - 19 Side Section Cut

Scale: 1/2 Actual Size

UP - 19

Upright Series (UP): 2" x 3" Post

Double-sided Steel Fabrication (Continued)

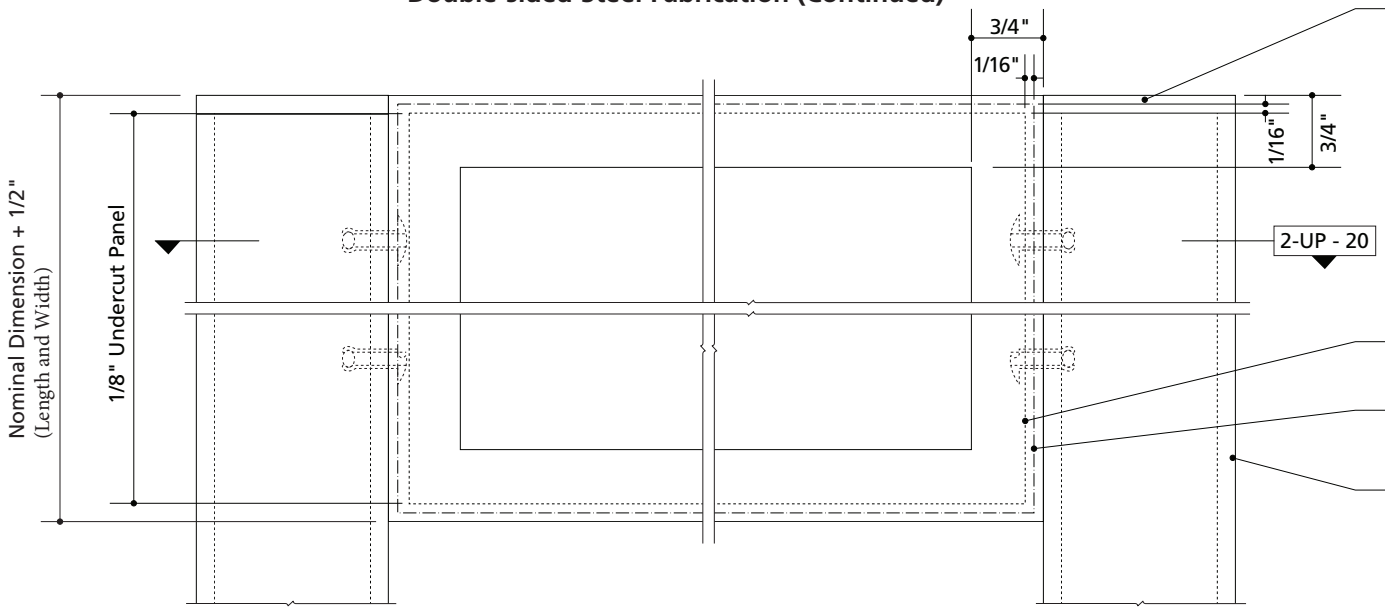

1-UP - 20 Frame Front Elevation

Scale: 1/2 Actual Size

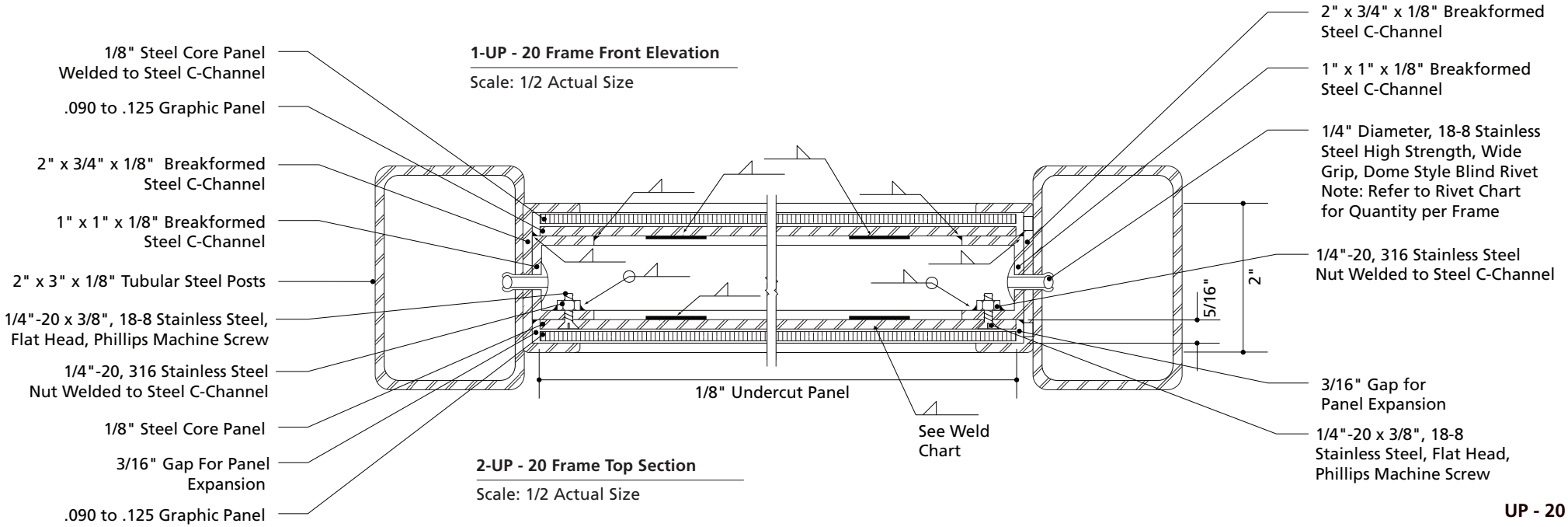

2-UP - 20 Frame Top Section

Scale: 1/2 Actual Size

UP - 20

Upright Series (UP): 2" x 3" Post

Single-sided Aluminum Fabrication

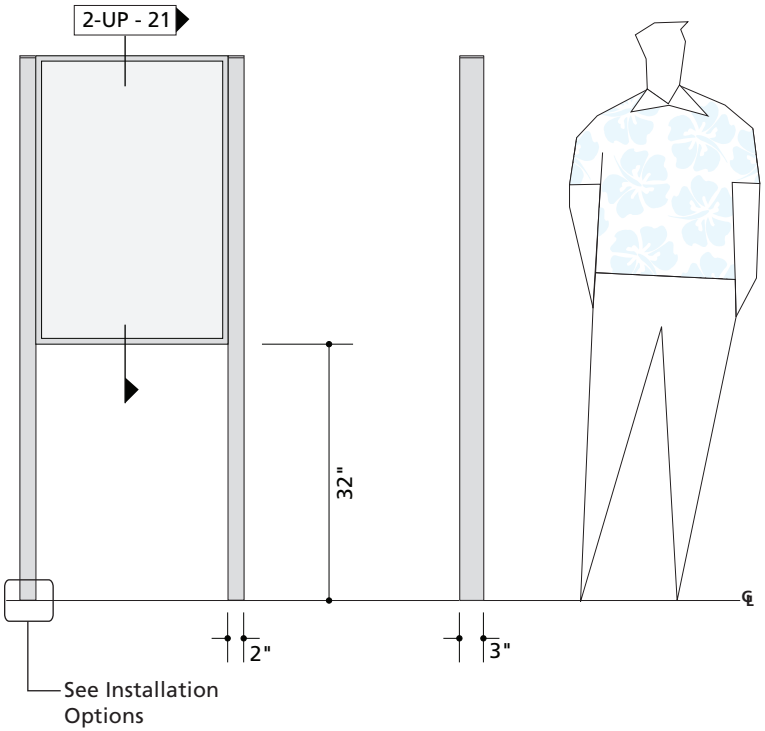

1-UP - 21 Upright Elevation

Scale: 1/2" = 1' -0"

General Note:
All breakformed steel and aluminum frame edges shall be eased to prevent sharp edges and allow paint adherence.

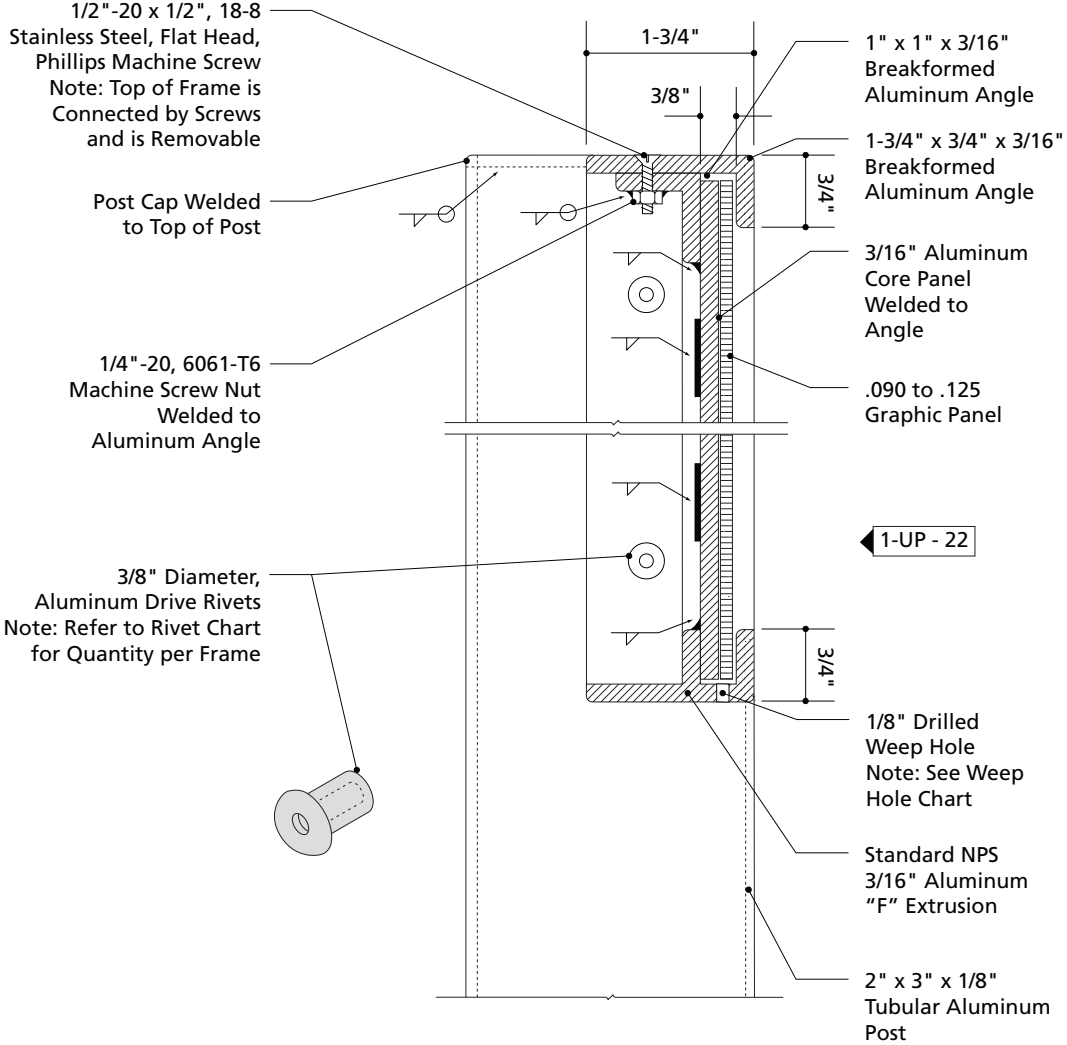

2-UP - 21 Side Section Cut

Scale: 1/2 Actual Size

UP - 21

Upright Series (UP): 2" x 3" Post

Single-sided Aluminum Fabrication (Continued)

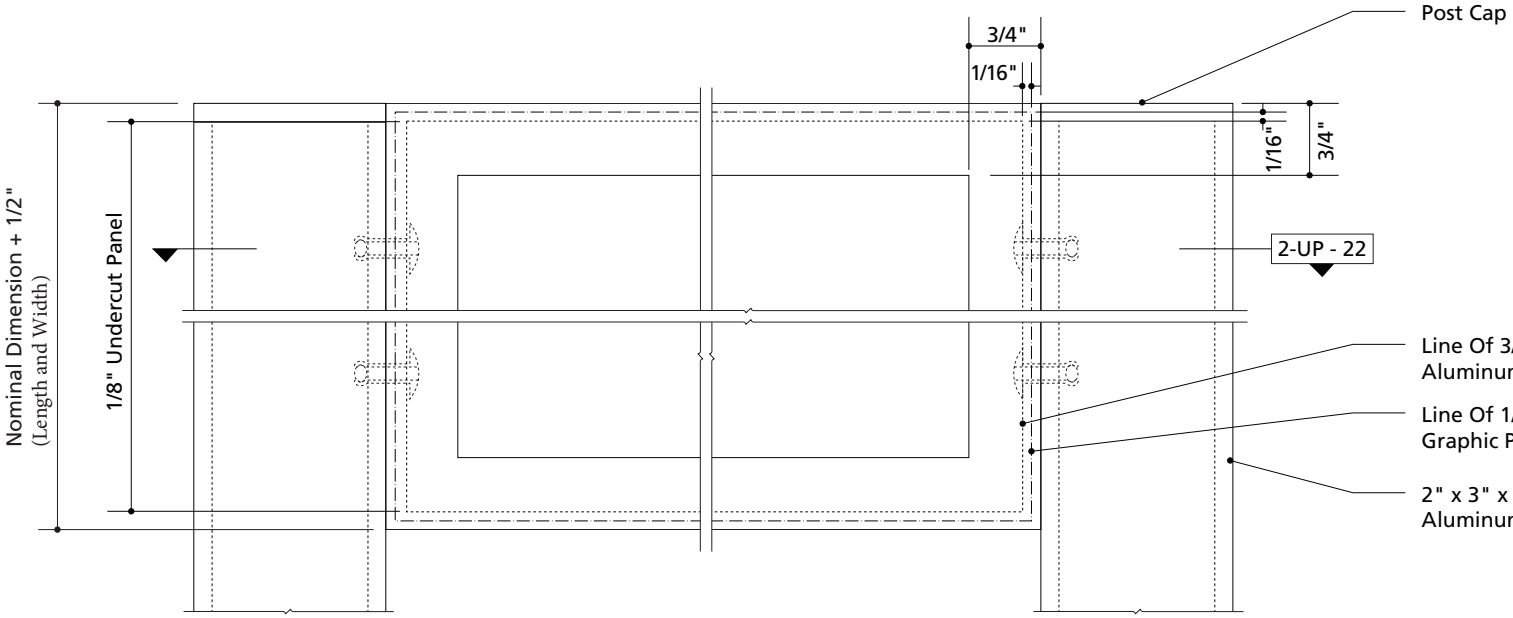

1-UP - 22 Frame Front Elevation

Scale: 1/2 Actual Size

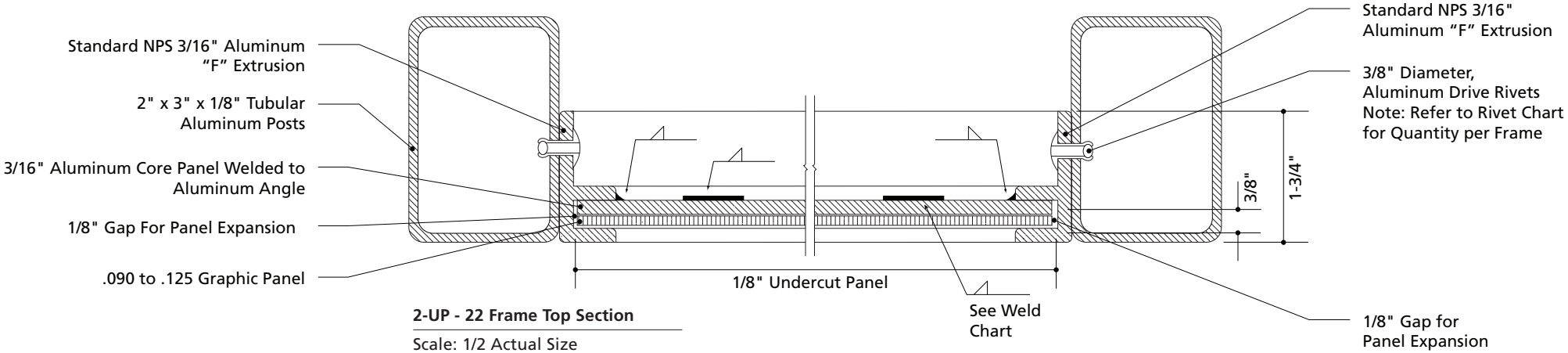

2-UP - 22 Frame Top Section

Scale: 1/2 Actual Size

UP - 22

Upright Series (UP): 2" x 3" Post

Double-sided Aluminum Fabrication

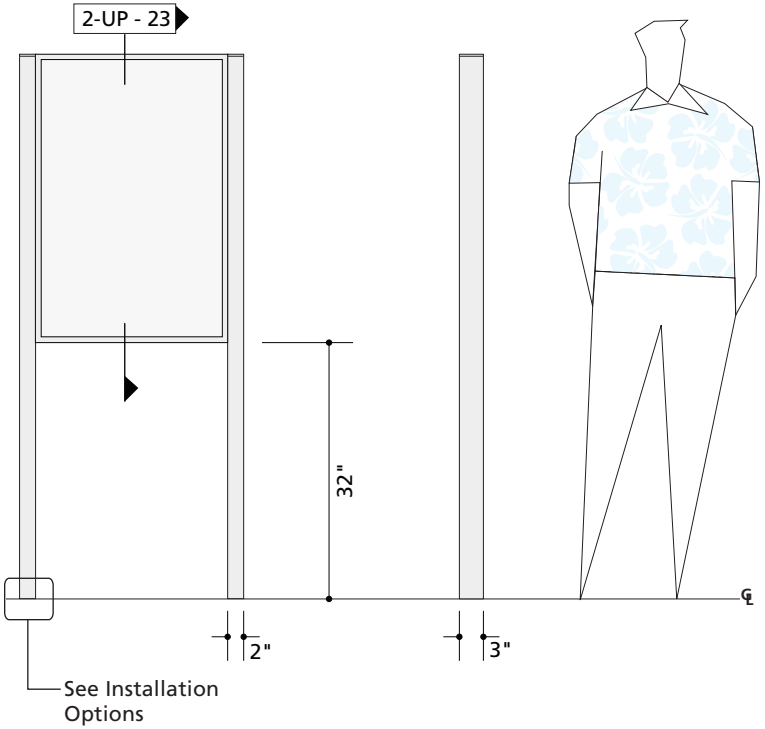

1-UP - 23 Upright Elevation

Scale: 1/2" = 1' -0"

General Note:
All breakformed steel and aluminum frame edges shall be eased to prevent sharp edges and allow paint adherence.

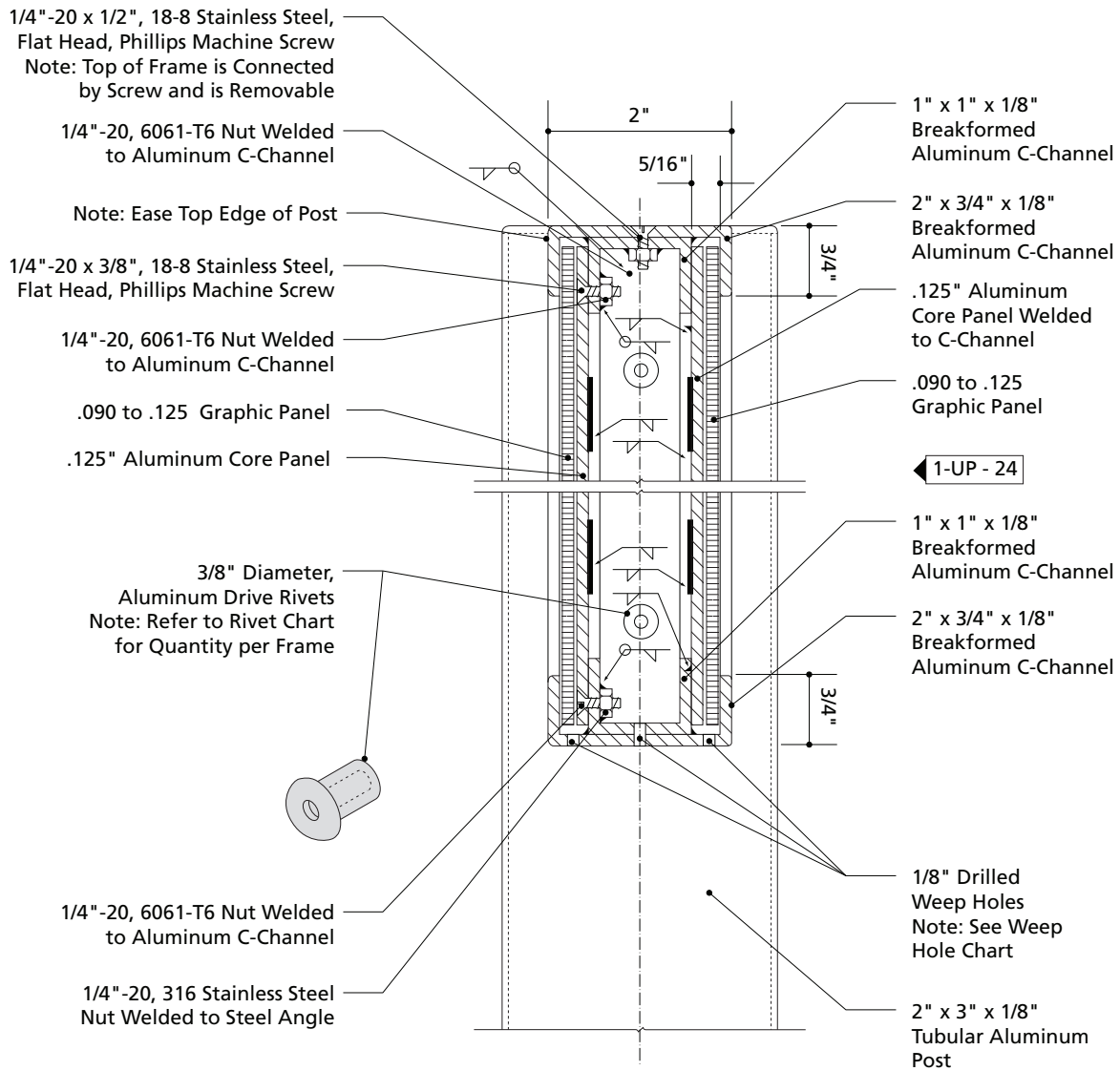

2-UP - 23 Side Section Cut

Scale: 1/2 Actual Size

UP - 23

Upright Series (UP): 2" x 3" Post

Double-sided Aluminum Fabrication (Continued)

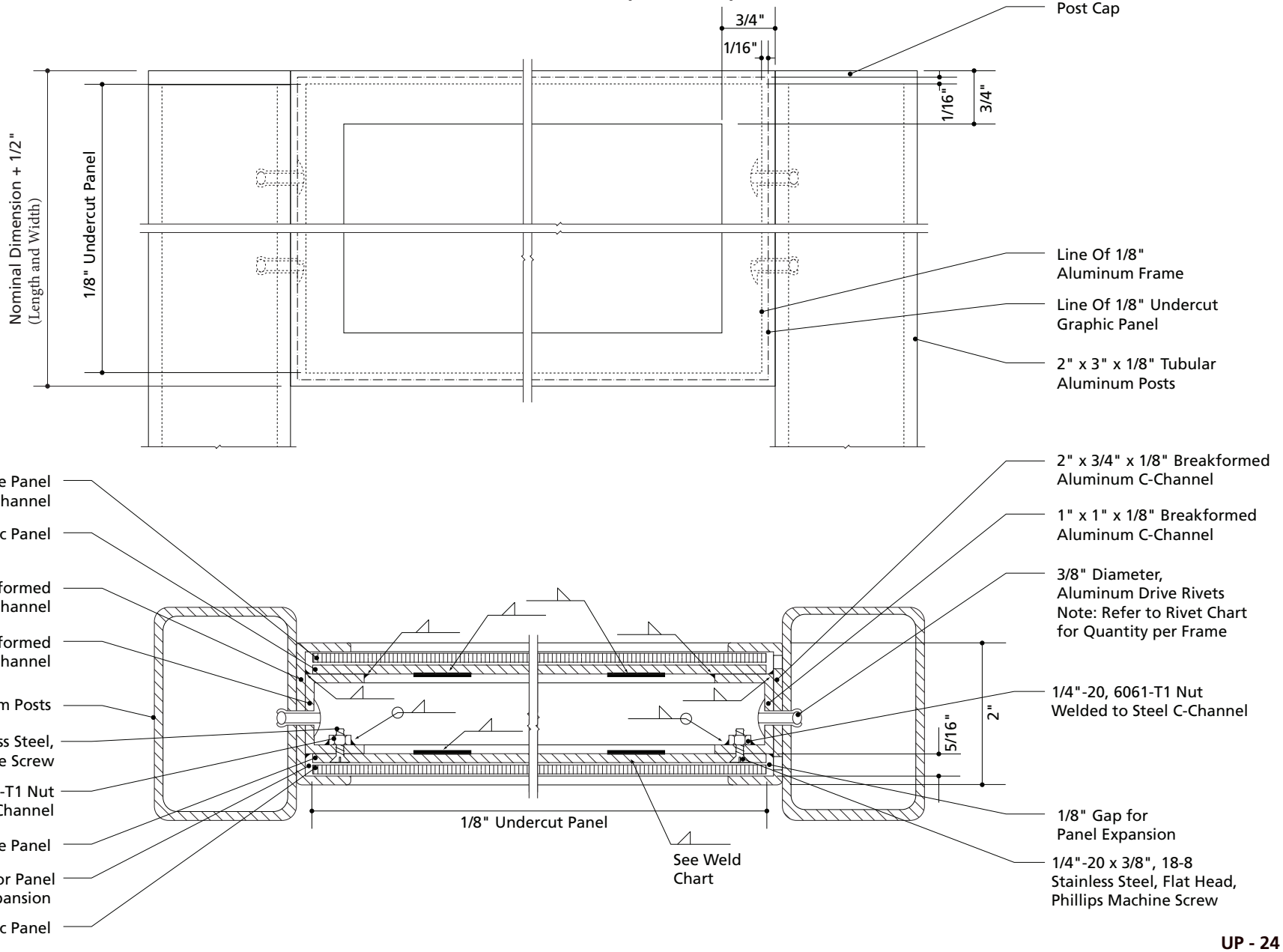

UP - 24

Upright Series (UP) with Roof

Aluminum Fabrication

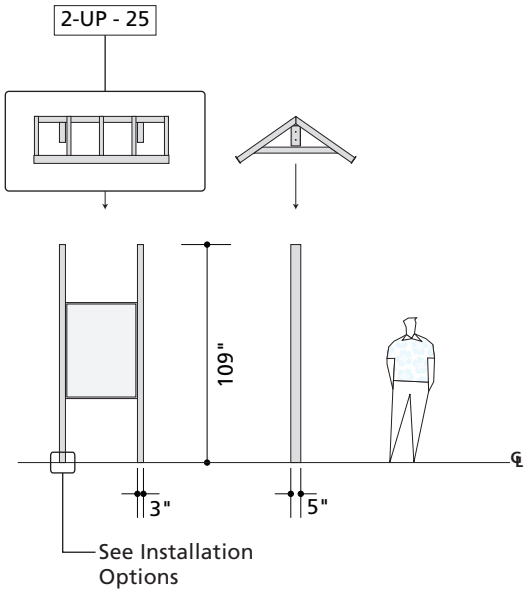

1-UP - 25 36" x 48" Upright with Roof Elevation

Scale: 1/8" = 1'-0"

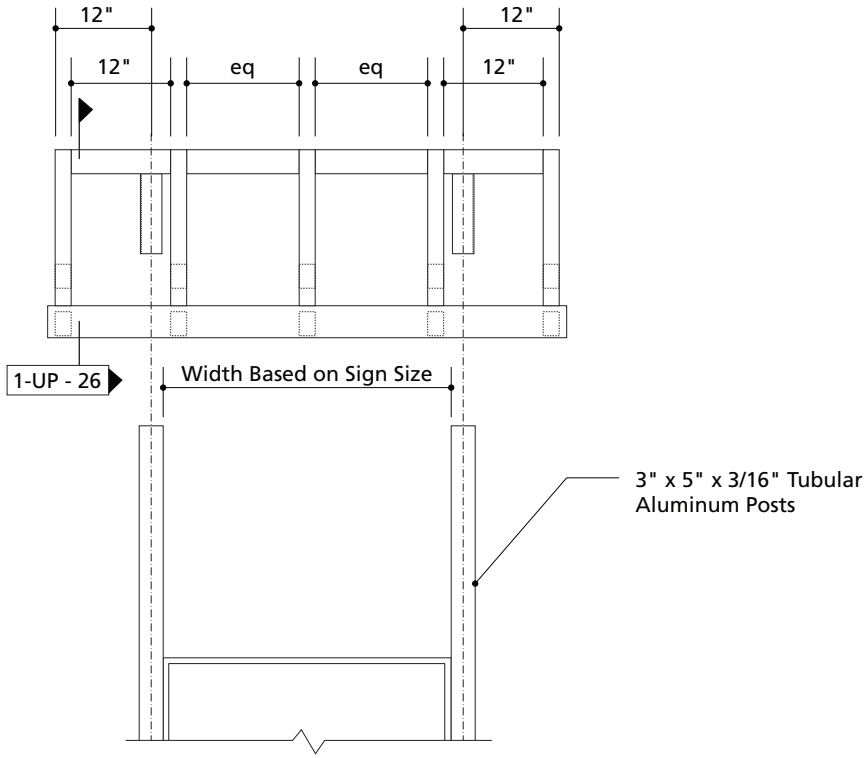

2-UP - 25 Roof Front Elevation

Scale: 1/2" = 1'-0"

Upright Series (UP) with Roof

Aluminum Fabrication (Continued)

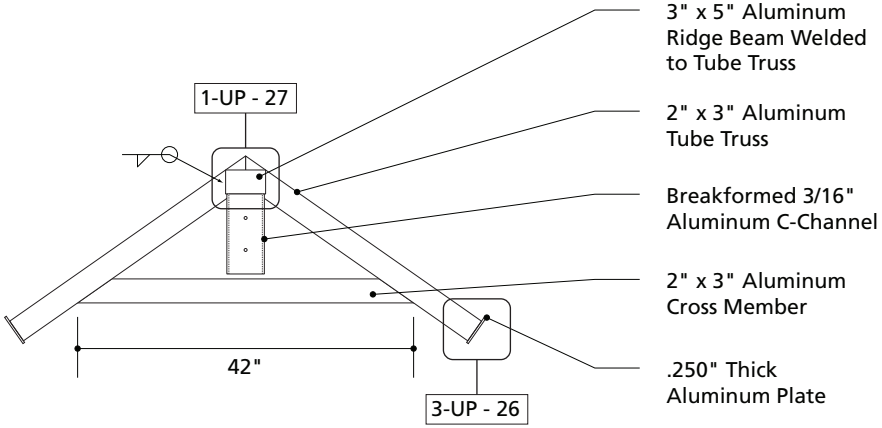

1-UP 26 Roof Cross Section

Scale: 1/2" = 1'-0"

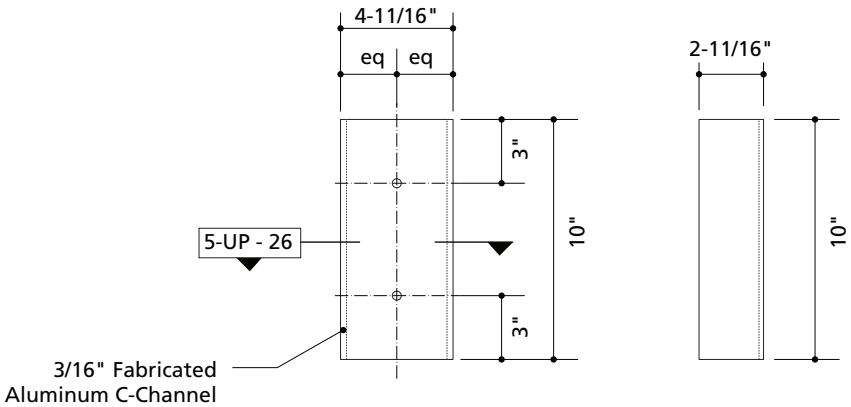

2-UP - 26 C-Channel Front and Side Elevation

Scale: 1/2" = 1'-0"

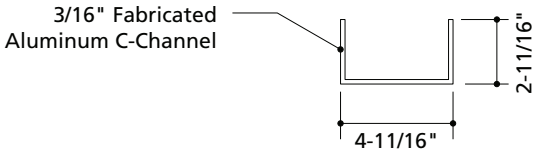

5-UP - 26 C-Channel Section Cut

Scale: 1/2" = 1'-0"

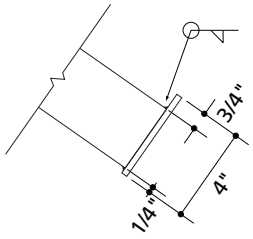

3-UP - 26 Truss-Plate Connection Detail

Scale: 1-1/2" = 1'-0"

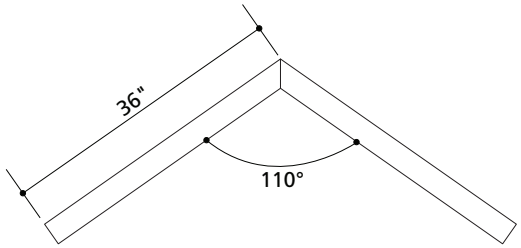

4-UP - 26 Aluminum Tube Truss Detail

Scale: 1/2" = 1'-0"

Upright Series (UP) with Roof

Aluminum Fabrication (Continued)

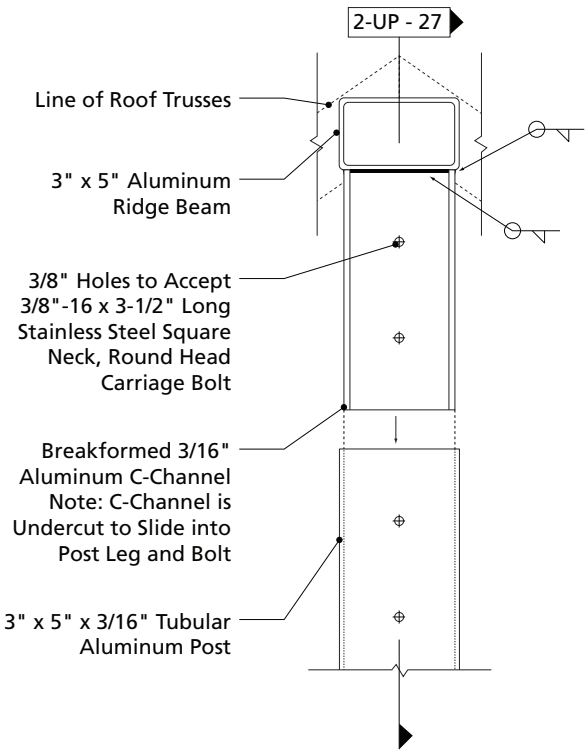

1-UP - 27 Post/Truss Cross Section

Scale: 1-1/2" = 1'-0"

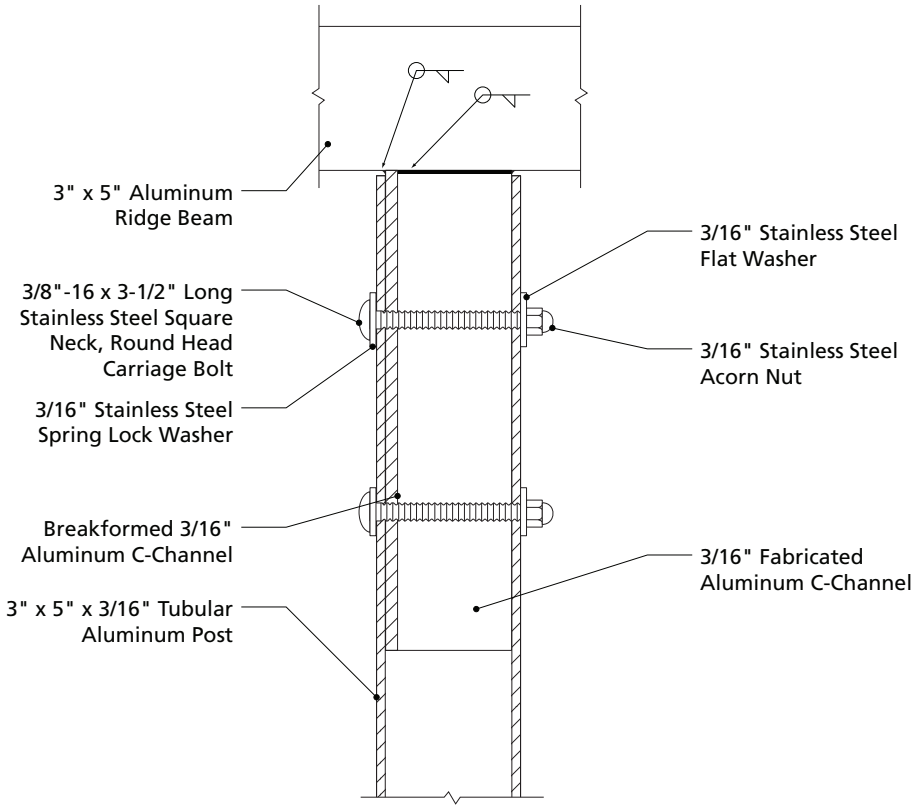

2-UP - 27 Post Connection Cross Section

Scale: 3" = 1'-0"

Upright Series (UP) with Roof

Aluminum Fabrication (Continued)

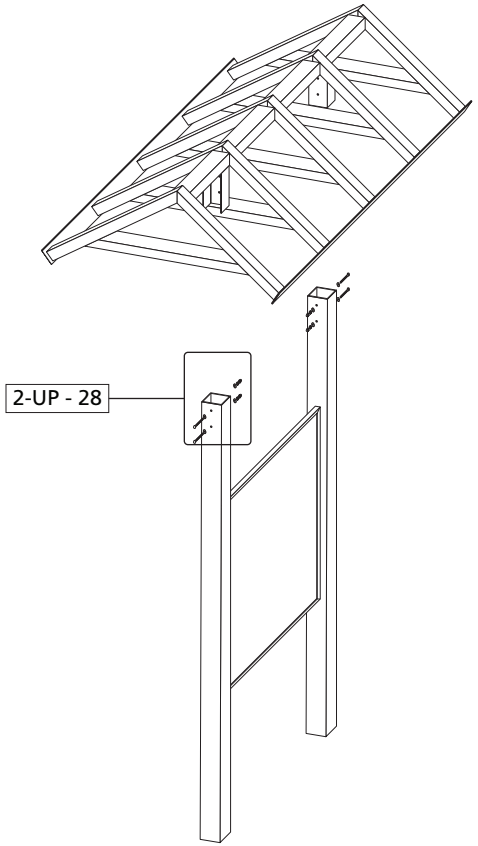

1-UP - 28 Exploded View

Scale: 1/4" = 1'-0"

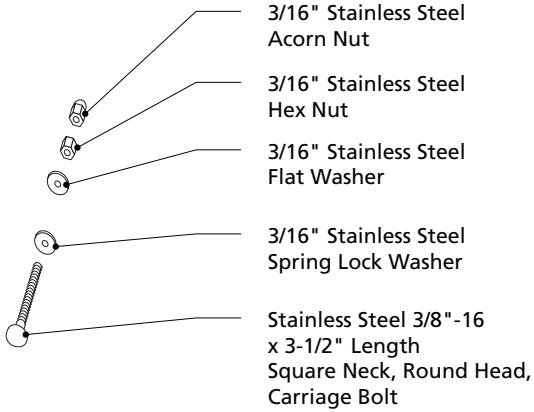

2-UP - 28 Connection Hardware

Scale: 3" = 1'-0"

Upright Inline 2 Series (UPN2)

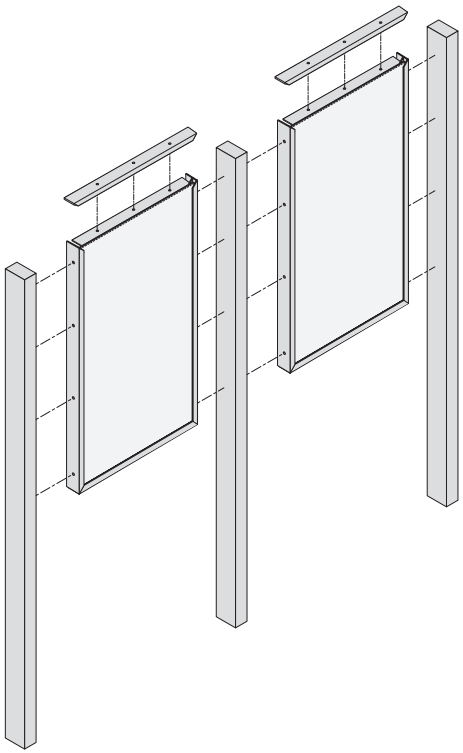

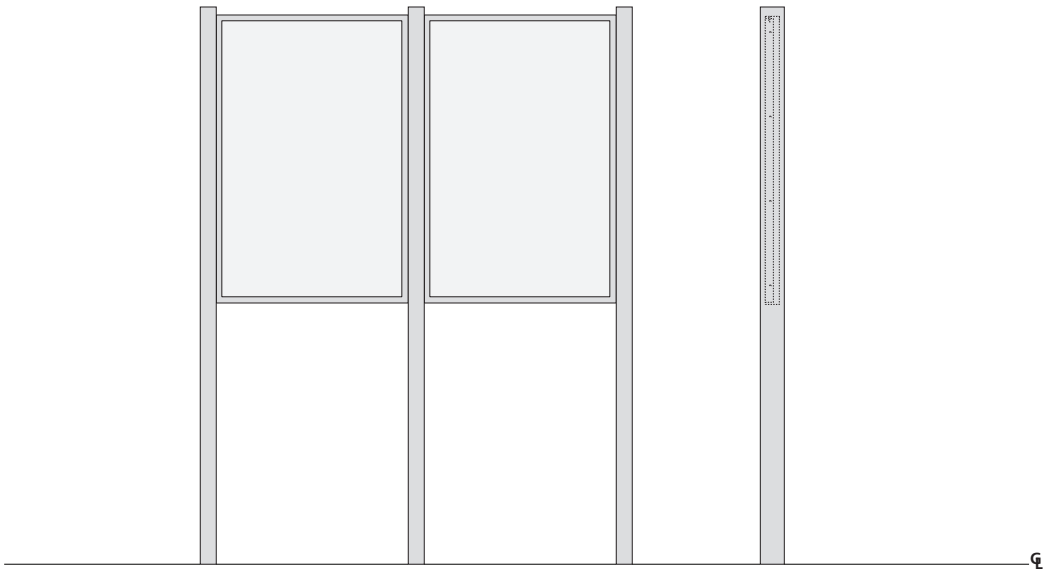

Upright Inline 2 Series (UPN2)

Steel Fabrication

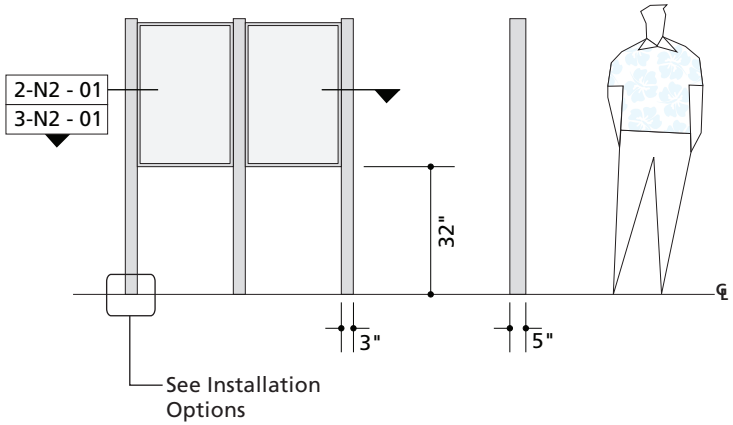

1-N2 - 01 Upright Inline 2 Elevation

Scale: 1/4" = 1'-0"

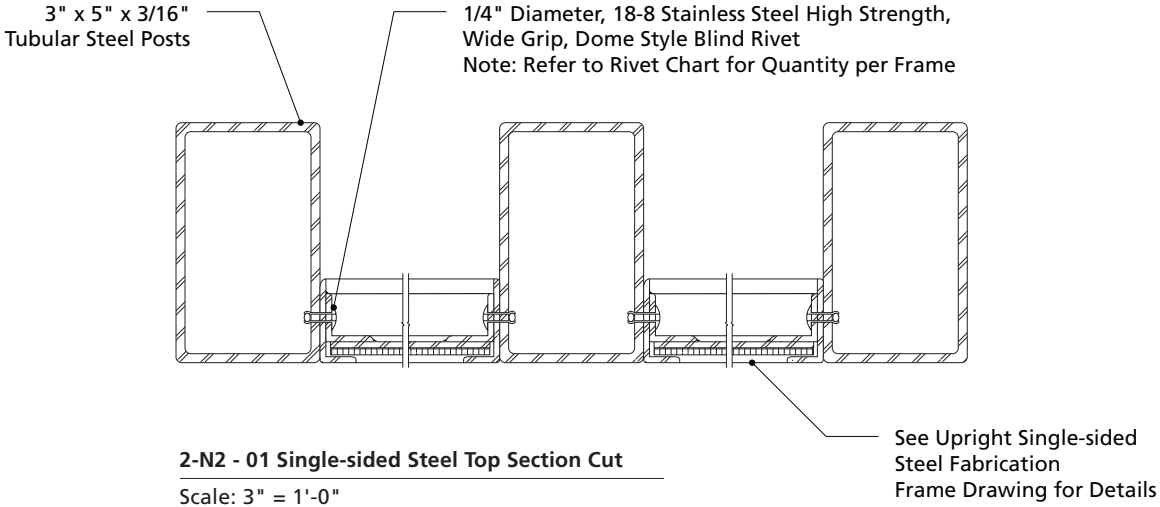

2-N2 - 01 Single-sided Steel Top Section Cut

Scale: 3" = 1'-0"

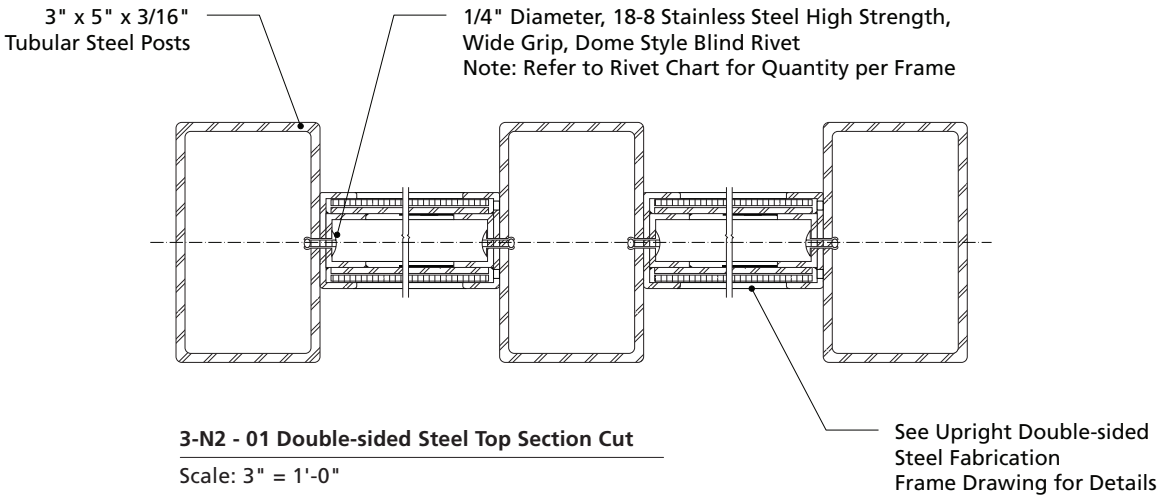

3-N2 - 01 Double-sided Steel Top Section Cut

Scale: 3" = 1'-0"

N2 - 01

Upright Inline 2 Series (UPN2)

Aluminum Fabrication

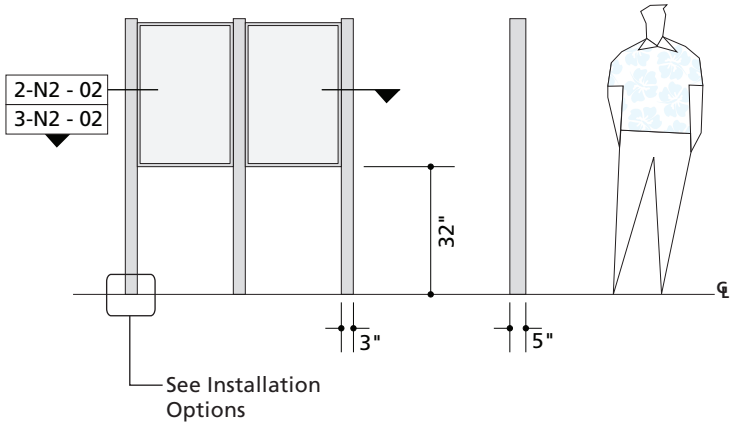

1-N2 - 02 Upright Inline 2 Elevation

Scale: 1/4" = 1'-0"

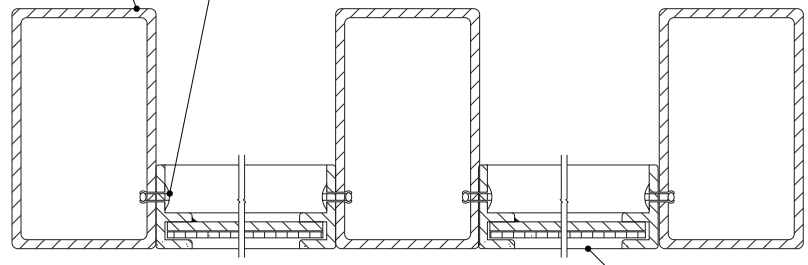

2-N2 - 02 Single-sided Steel Top Section Cut

Scale: 3" = 1'-0"

See Upright Single-sided Aluminum Fabrication Frame Drawing for Details

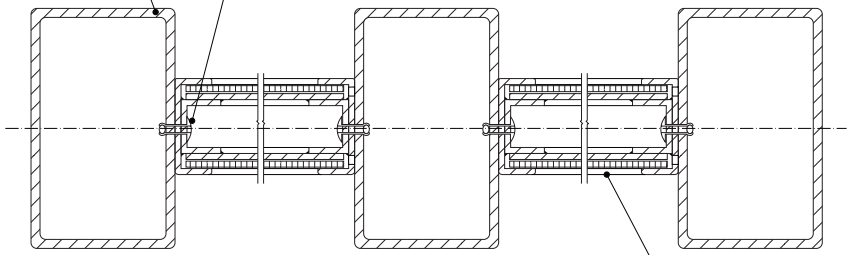

3-N2 - 02 Double-sided Steel Top Section Cut

Scale: 3" = 1'-0"

See Upright Double-sided Aluminum Fabrication Frame Drawing for Details

N2 - 02

Upright Inline 2 Series (UPN2) with Roof

Alulminum Fabrication

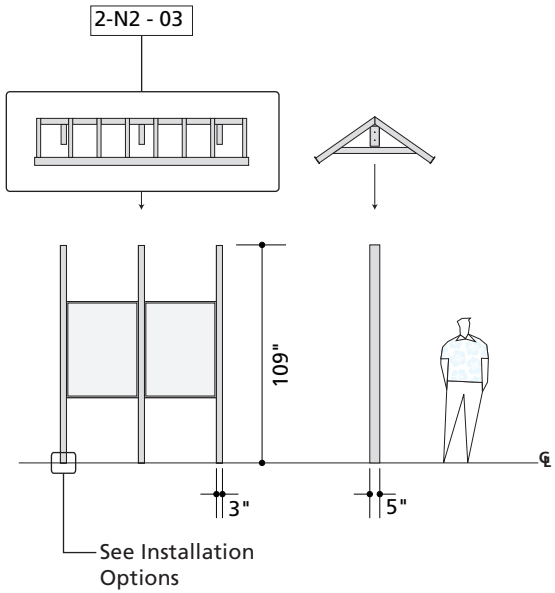

1-N2 - 03 36" x 48" Upright Inline 2 with Roof Elevation

Scale: 1/8" = 1'-0"

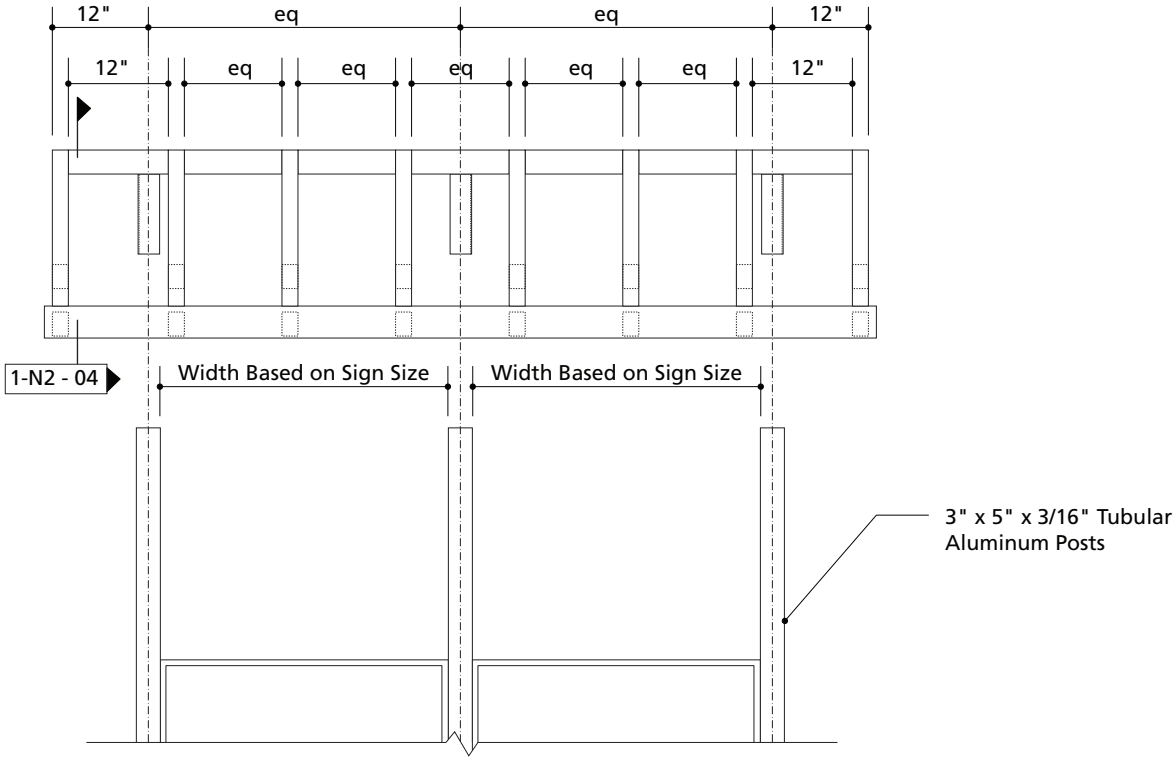

2-N2 - 03 Roof Front Elevation

Scale: 1/2" = 1'-0"

Upright Inline 2 Series (UPN2) with Roof

Aluminum Fabrication (Continued)

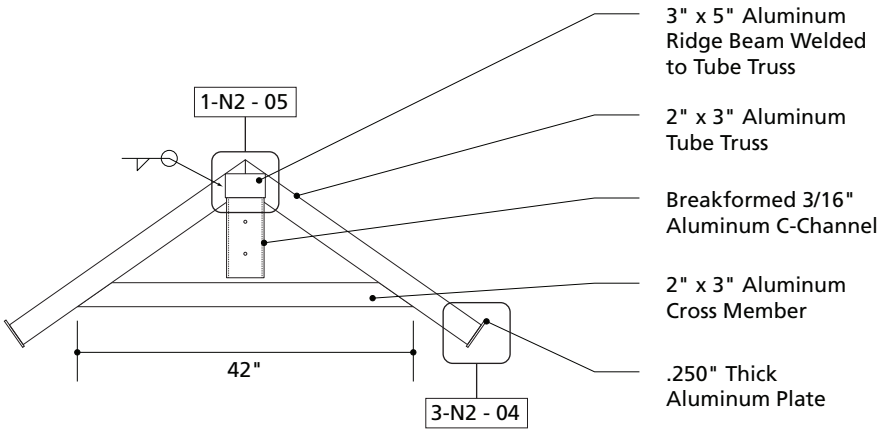

1-UP 26 Roof Cross Section

Scale: 1/2" = 1'-0"

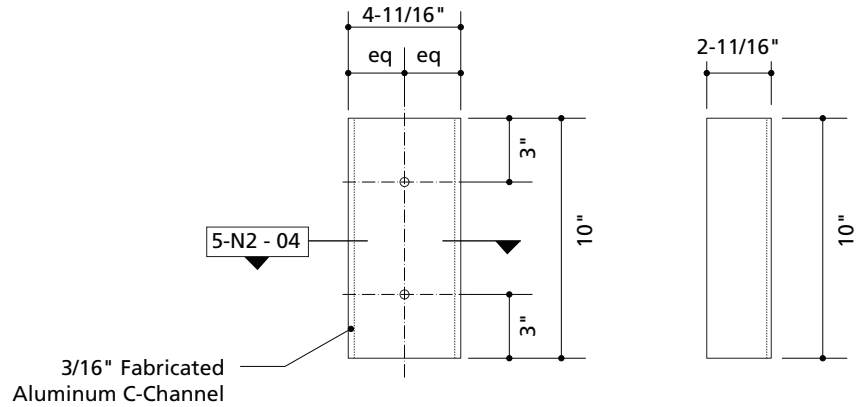

2-N2 - 04 C-Channel Front and Side Elevation

Scale: 1/2" = 1'-0"

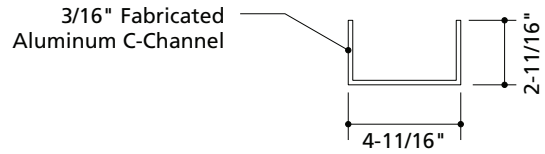

5-N2 - 04 C-Channel Section Cut

Scale: 1/2" = 1'-0"

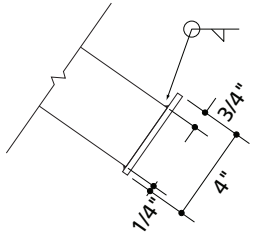

3-N2 - 04 Truss-Plate Connection Detail

Scale: 1-1/2" = 1'-0"

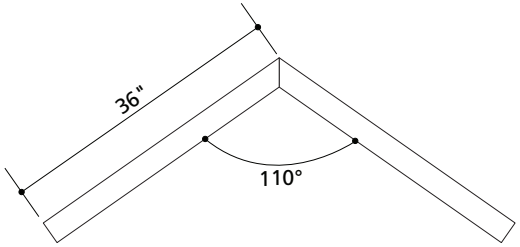

4-N2 - 04 Aluminum Tube Truss Detail

Scale: 1/2" = 1'-0"

N2 - 04

Upright Inline 2 Series (UPN2) with Roof

Aluminum Fabrication (Continued)

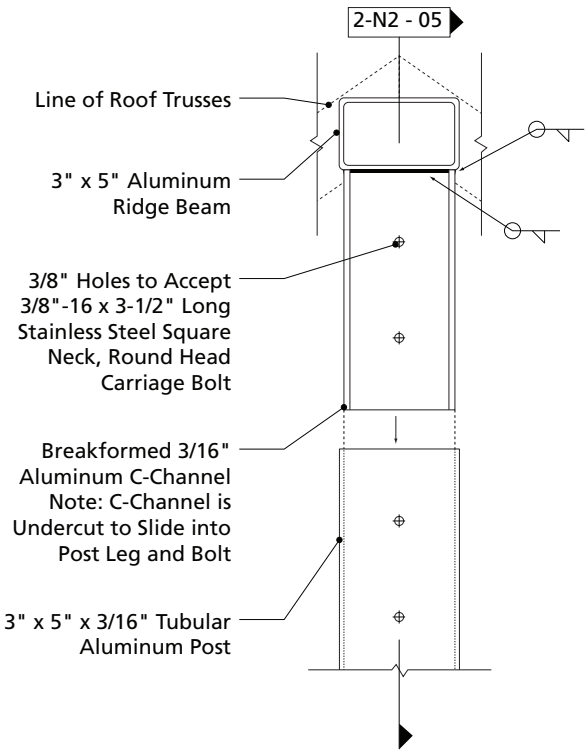

1-N2 - 05 Post/Truss Cross Section

Scale: 1-1/2" = 1'-0"

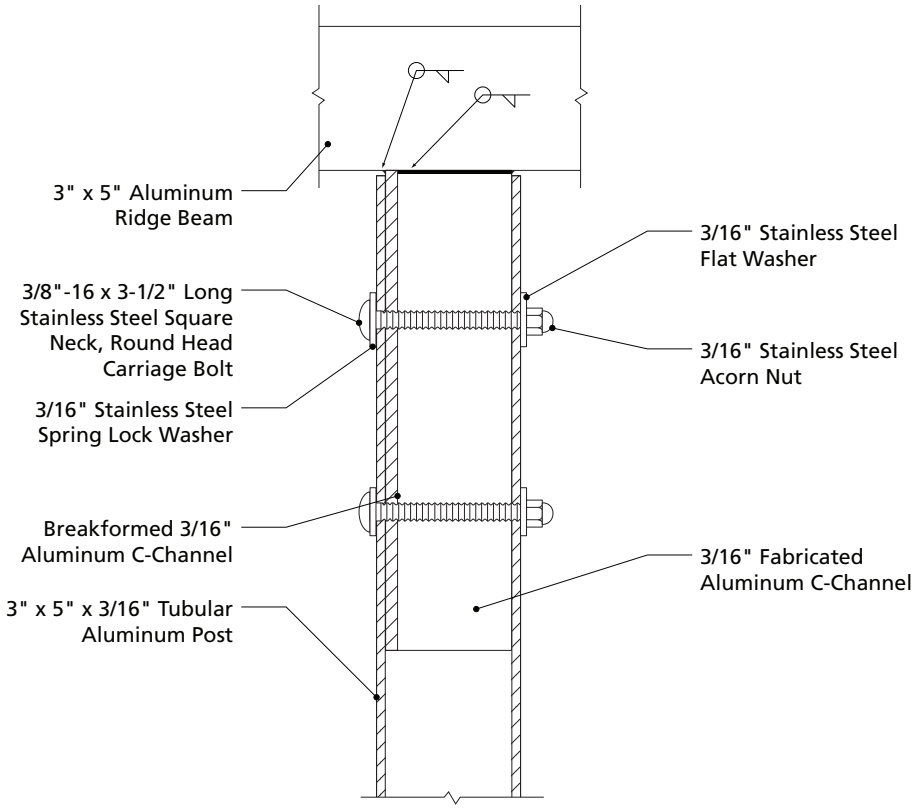

2-N2 - 05 Post Connection Cross Section

Scale: 3" = 1'-0"

Upright Inline 2 Series (UPN2) with Roof

Aluminum Fabrication (Continued)

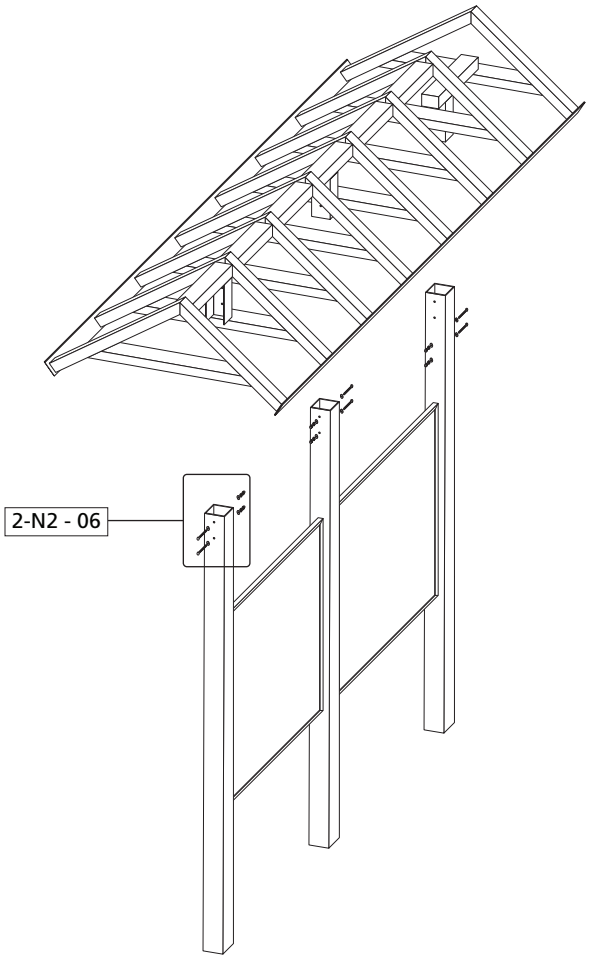

1-N2 - 06 Exploded View

Scale: 1/4" = 1'-0"

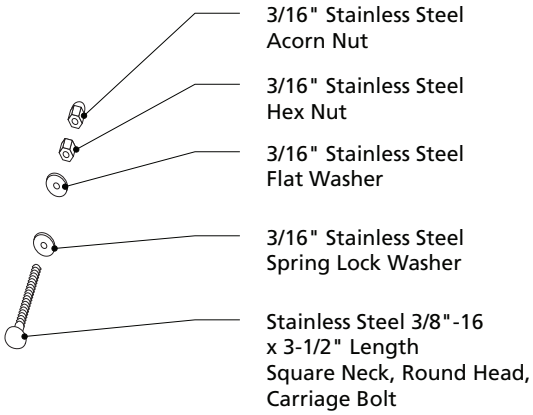

2-N2 - 06 Connection Hardware

Scale: 3" = 1'-0"

Upright Inline 3 Series (UPN3)

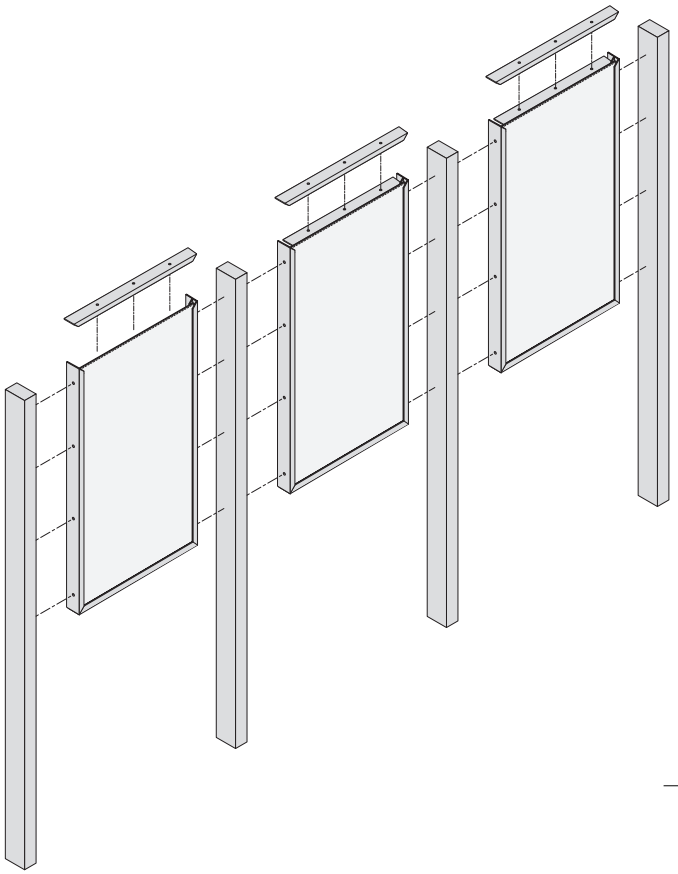

Upright Inline 3 Series (UPN3)

Steel Fabrication

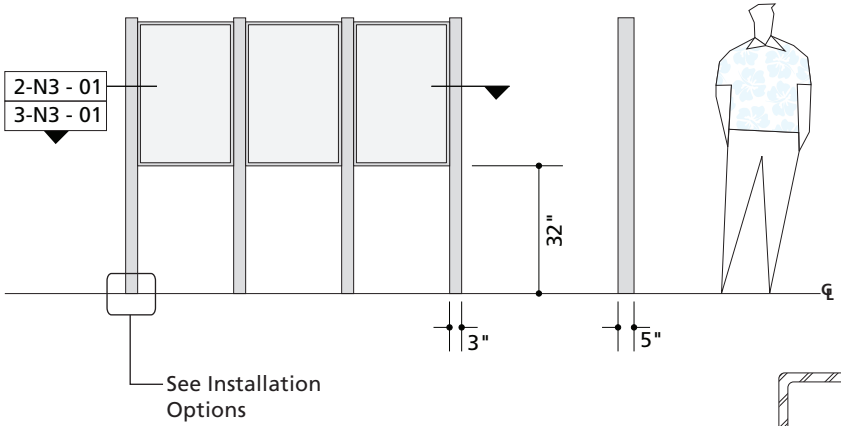

1-N3 - 01 Upright Inline 3 Elevation

Scale: 1/4" = 1'-0"

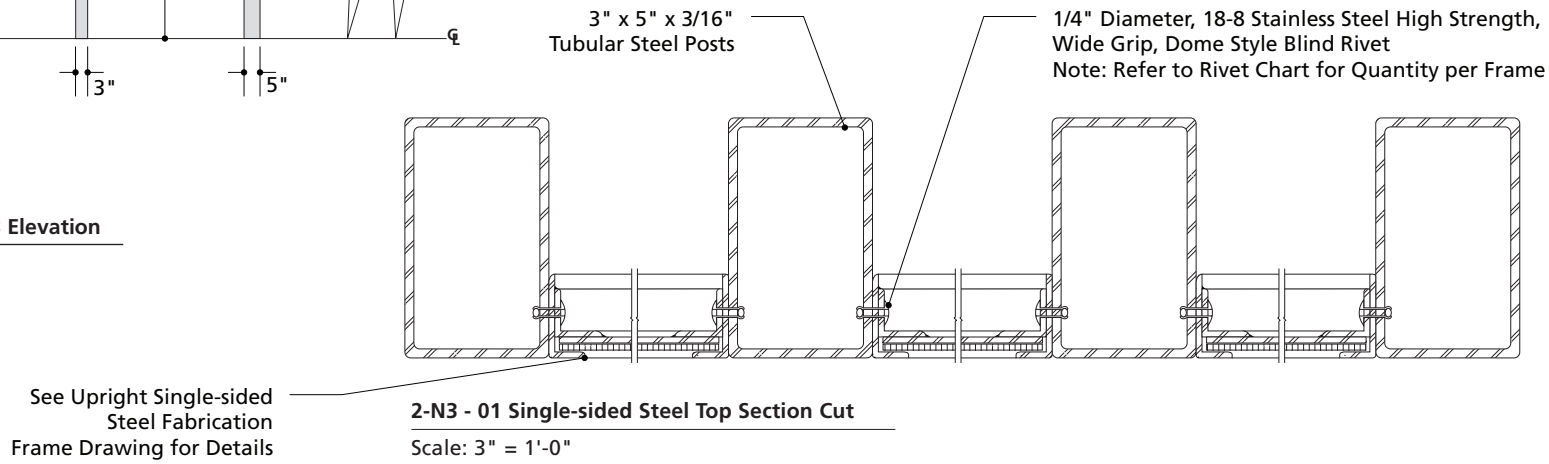

2-N3 - 01 Single-sided Steel Top Section Cut

Scale: 3" = 1'-0"

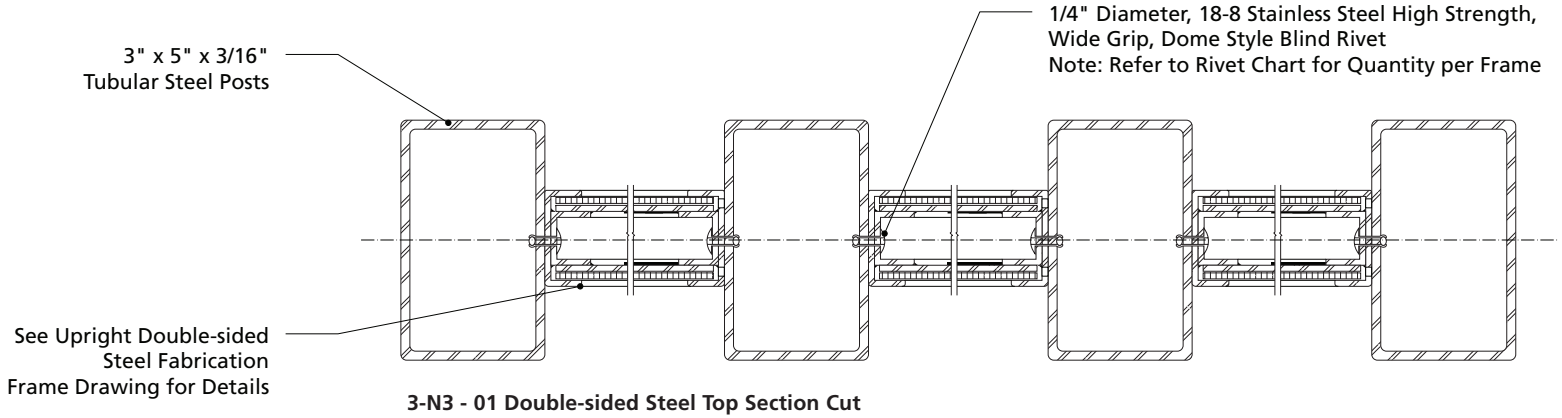

3-N3 - 01 Double-sided Steel Top Section Cut

Scale: 3" = 1'-0"

N3 - 01

Upright Inline 3 Series (UPN3)

Aluminum Fabrication

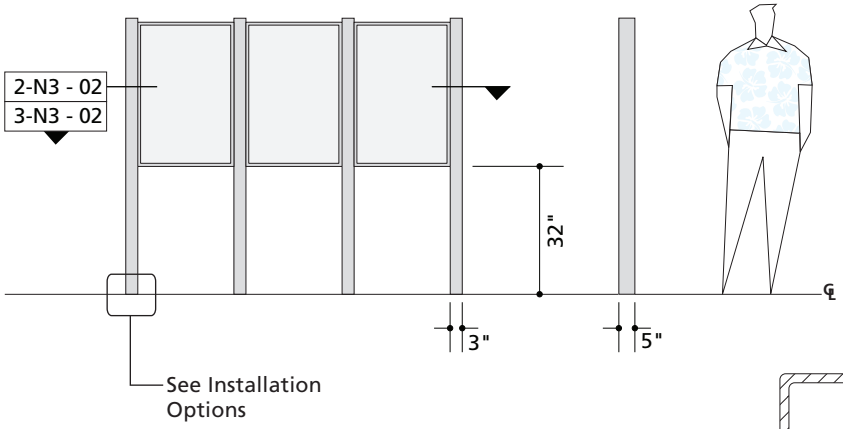

1-N3 - 02 Upright Inline 3 Elevation

Scale: 1/4" = 1'

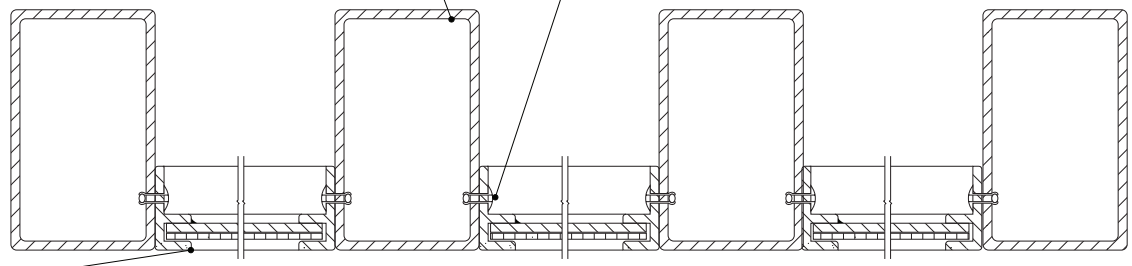

2-N3 - 02 Single-sided Steel Top Section Cut

Scale: 3" = 1'-0"

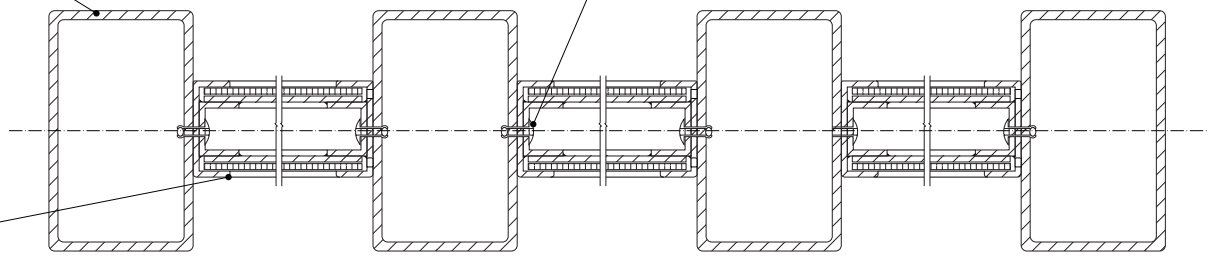

3-N3 - 02 Double-sided Steel Top Section Cut

Scale: 3" = 1'-0"

N3 - 02

Upright Inline 3 Series (UPN3) with Roof

Alulminum Fabrication

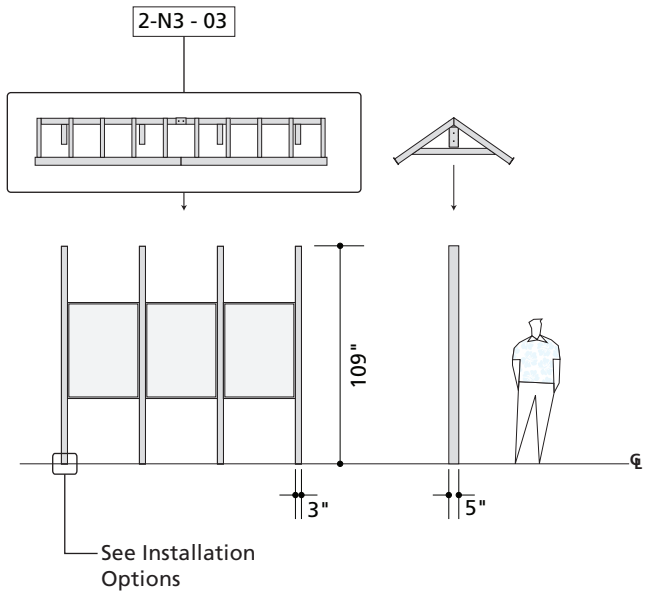

1-N3 - 03 36” x 48” Upright Inline 3 with Roof Elevation

Scale: 1/8” = 1’-0”

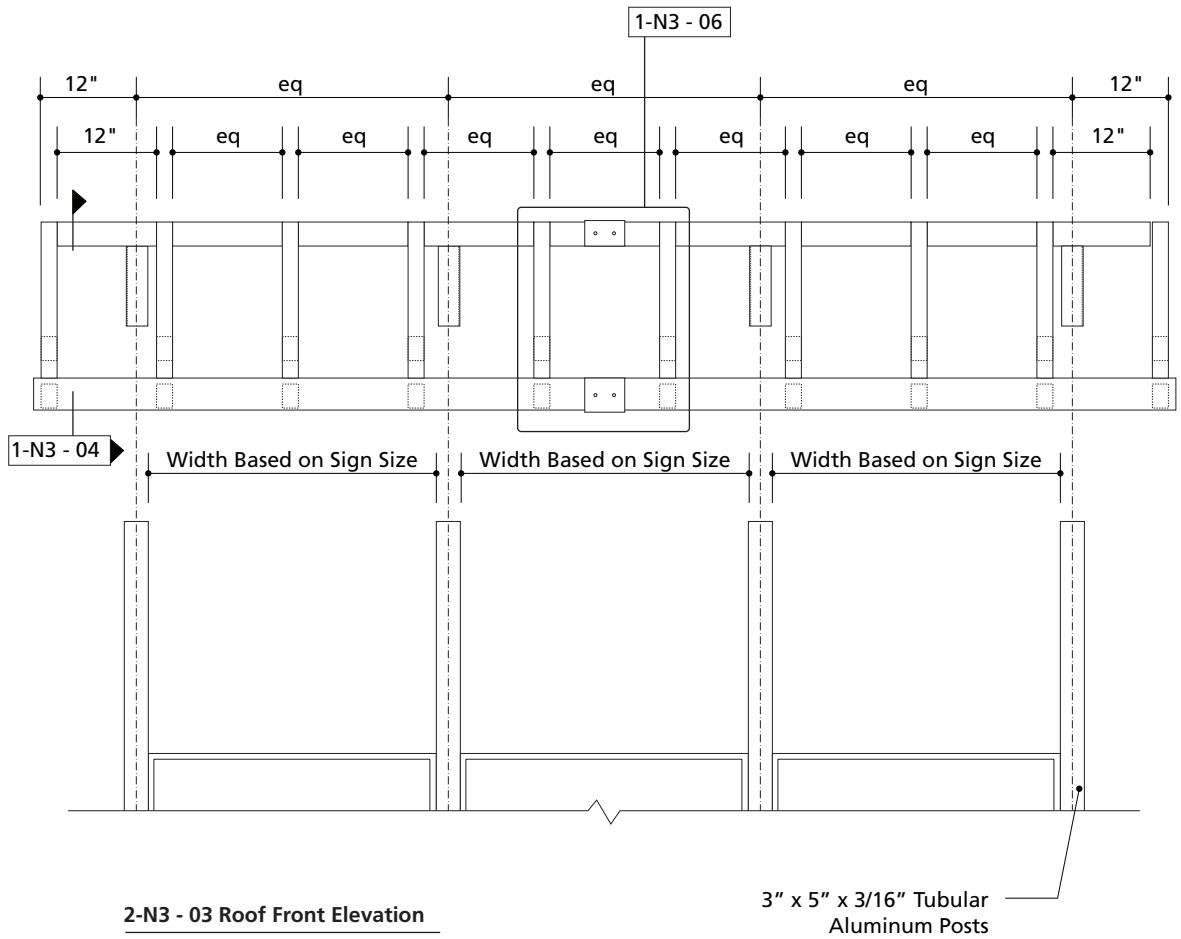

2-N3 - 03 Roof Front Elevation

Scale: 1/2” = 1’-0”

Upright Inline 3 Series (UPN3) with Roof

Aluminum Fabrication (Continued)

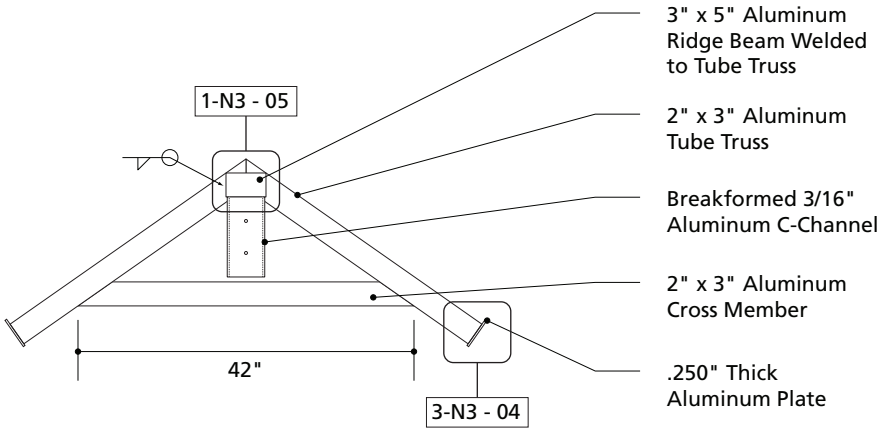

1-UP 26 Roof Cross Section

Scale: 1/2" = 1'-0"

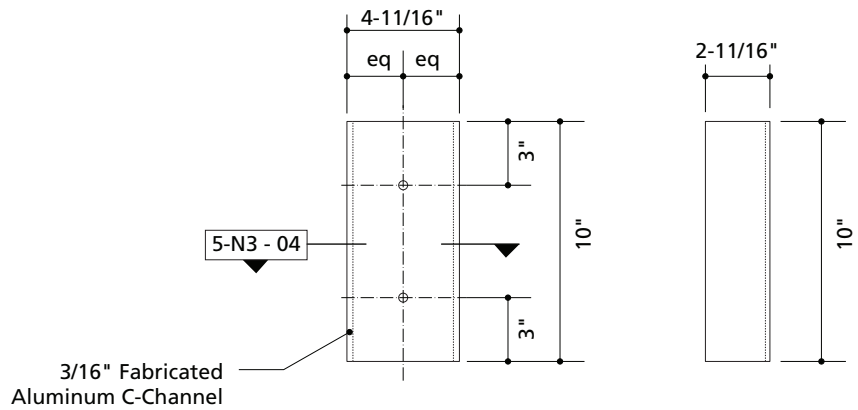

2-N3 - 04 C-Channel Front and Side Elevation

Scale: 1/2" = 1'-0"

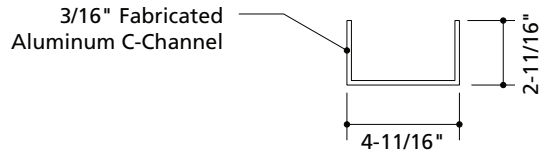

5-N3 - 04 C-Channel Section Cut

Scale: 1/2" = 1'-0"

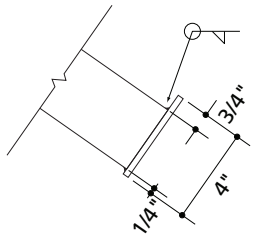

3-N3 - 04 Truss-Plate Connection Detail

Scale: 1-1/2" = 1'-0"

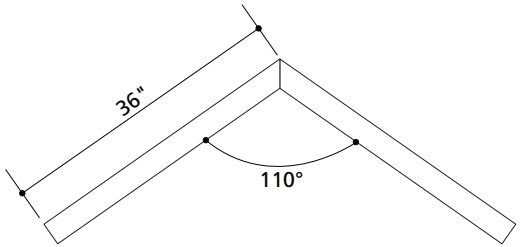

4-N3 - 04 Aluminum Tube Truss Detail

Scale: 1/2" = 1'-0"

N3 - 04

Upright Inline 3 Series (UPN3) with Roof

Aluminum Fabrication (Continued)

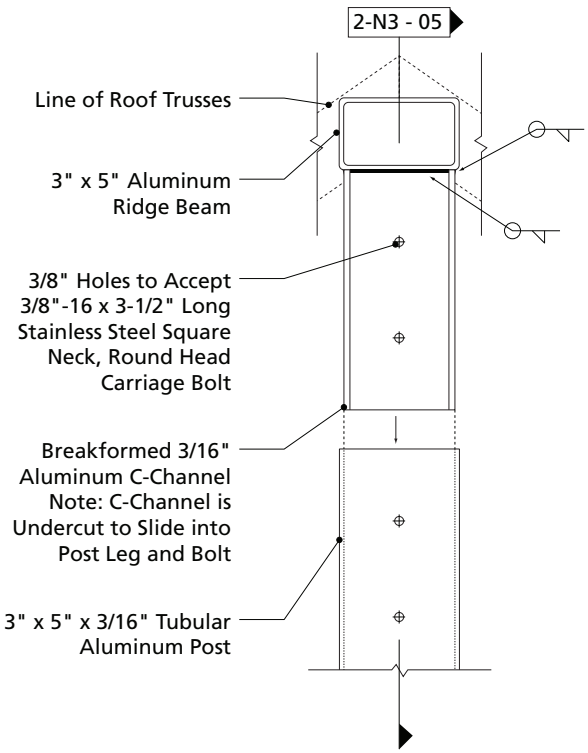

1-N3 - 05 Post/Truss Cross Section

Scale: 1-1/2" = 1'-0"

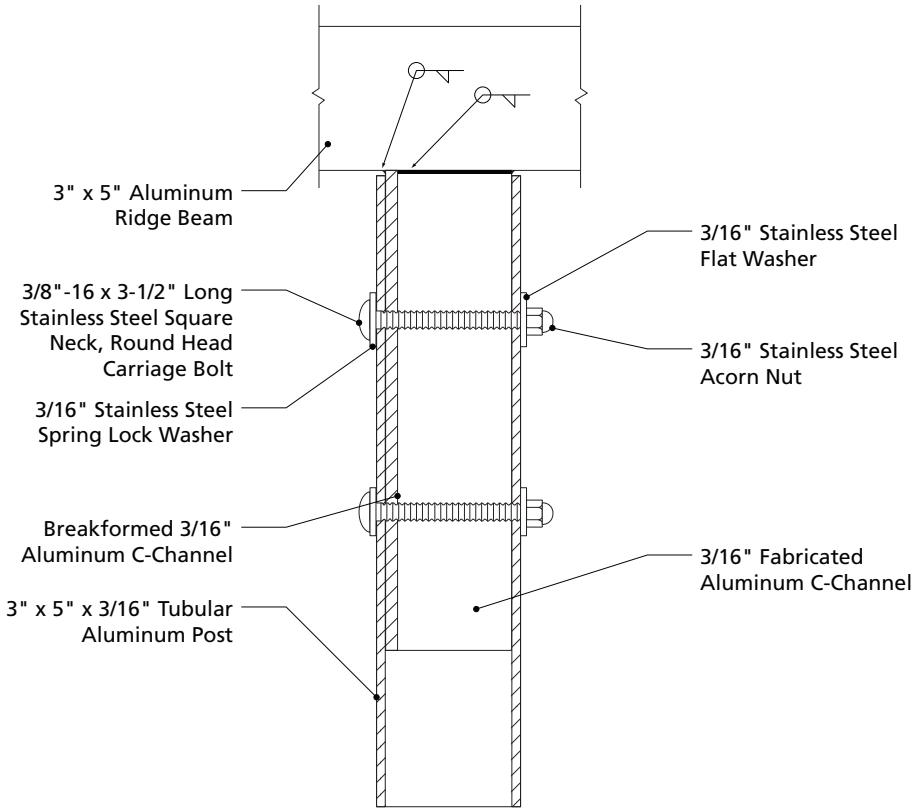

2-N3 - 05 Post Connection Cross Section

Scale: 3" = 1'-0"

Upright Inline 3 Series (UPN3) with Roof

Aluminum Fabrication (Continued)

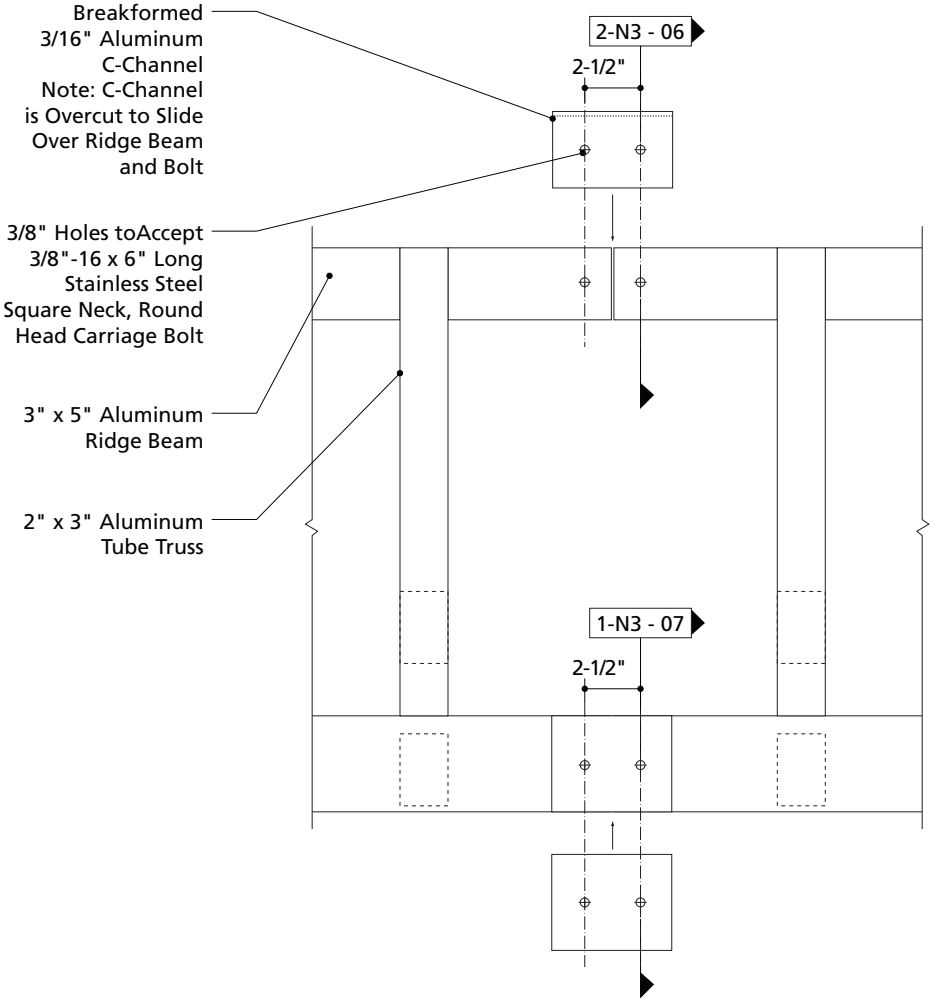

1-N3 - 06 Split Roof Connection Front Elevation

Scale: 1-1/2" = 1'-0"

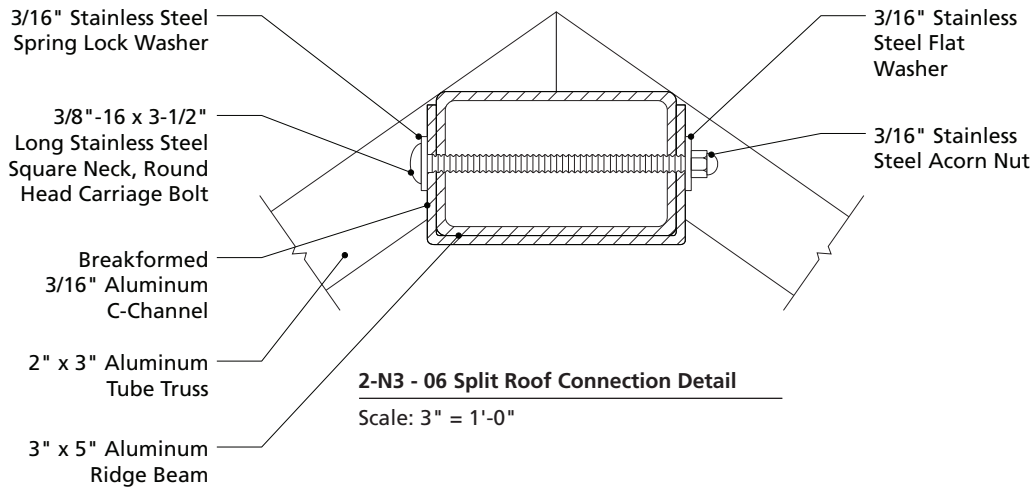

2-N3 - 06 Split Roof Connection Detail

Scale: 3" = 1'-0"

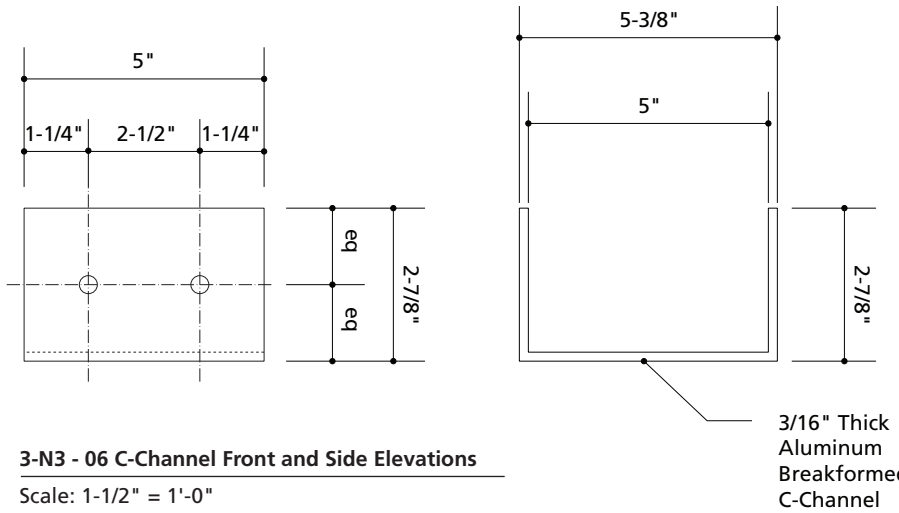

3-N3 - 06 C-Channel Front and Side Elevations

Scale: 1-1/2" = 1'-0"

N3 - 06

Upright Inline 3 Series (UPN3) with Roof

Aluminum Fabrication (Continued)

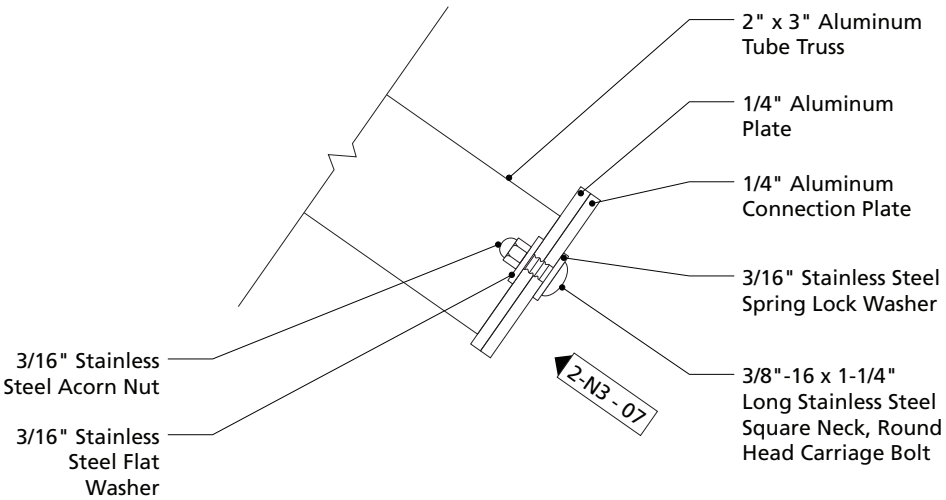

1-N3 - 07 Split Roof Connection Detail

Scale: 3" = 1'-0"

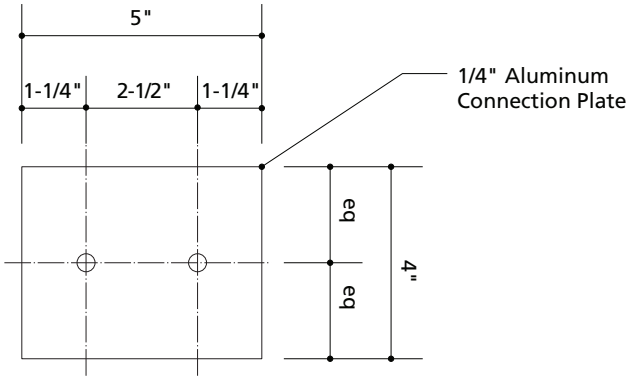

2-N3 - 07 Connection Plate Elevation

Scale: 3" = 1'-0"

Upright Inline 3 Series (UPN3) with Roof

Aluminum Fabrication (Continued)

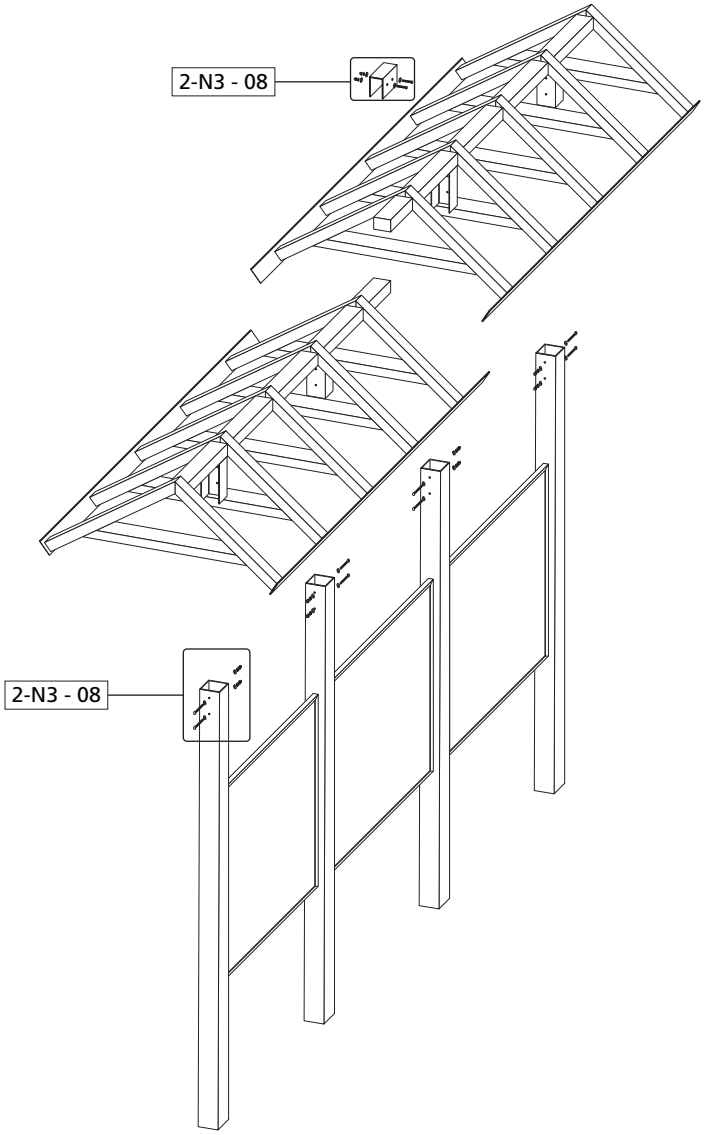

1-N3 - 08 Exploded View

Scale: 1/4" = 1'-0"

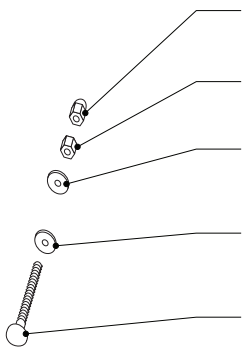

2-N3 - 08 Connection Hardware

Scale: 3" = 1'-0"

N3 - 08

Upright Tri-Sided Series (UPTR)

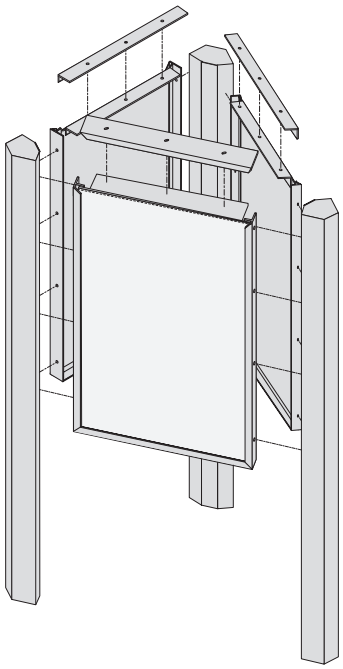

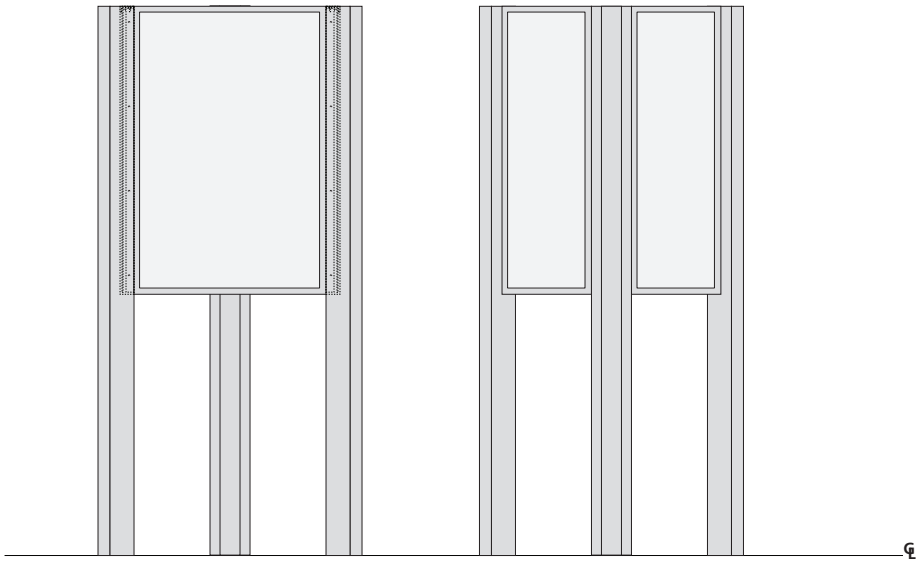

Upright Tri-Sided Series (UPTR)

Post Fabrication

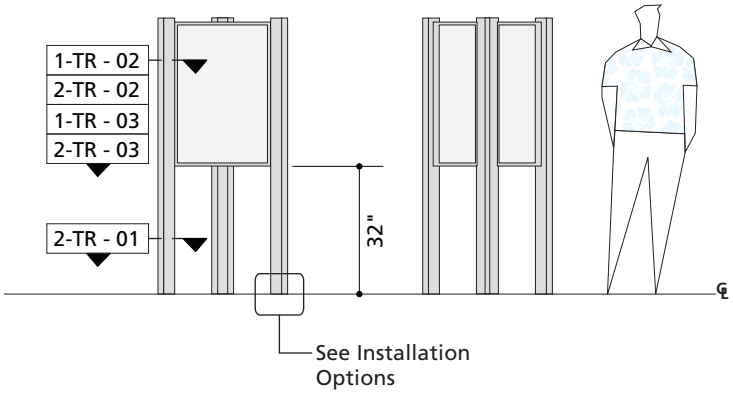

1-TR - 01 Upright Tri-Sided Elevation

Scale: 1/4" = 1'-0"

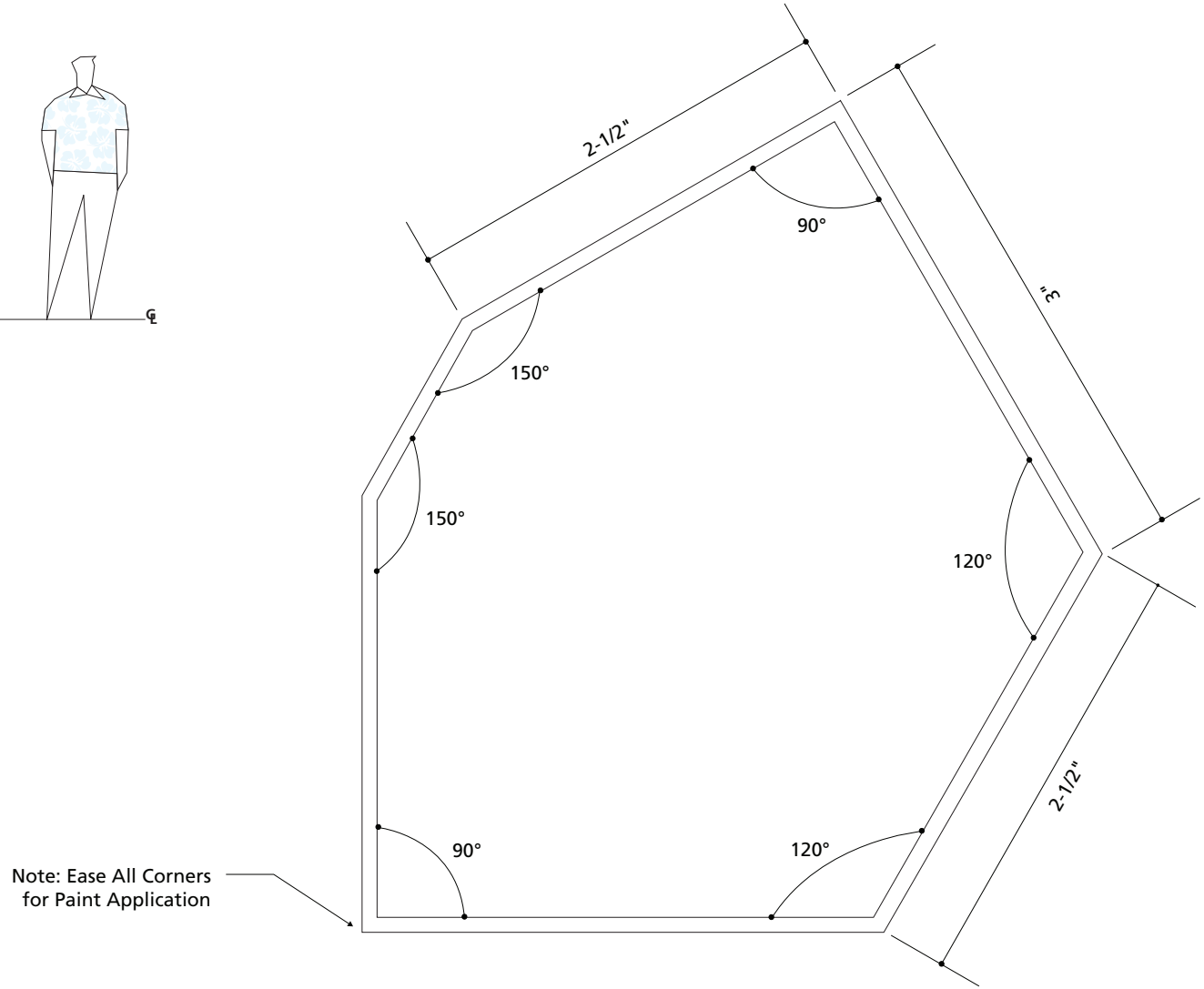

2-TR - 01 Post Dimension, Plan View

Scale: Actual Size

TR - 01

Upright Tri-Sided Series (UPTR)

Steel Fabrication

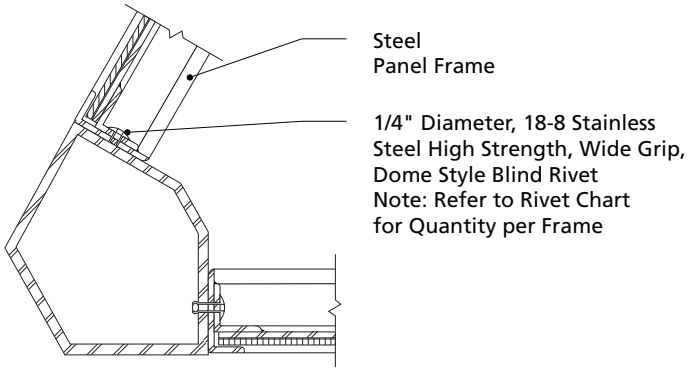

1-TR - 02 Steel Frames Top Section Cut

Scale: 3" = 1'-0"

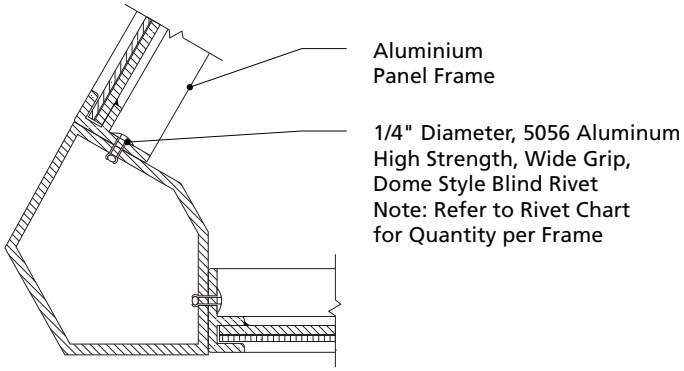

2-TR - 02 Aluminum Frames Top Section Cut

Scale: 3" = 1'-0"

Upright Tri-Sided Series (UPTR)

Alulminum Fabrication

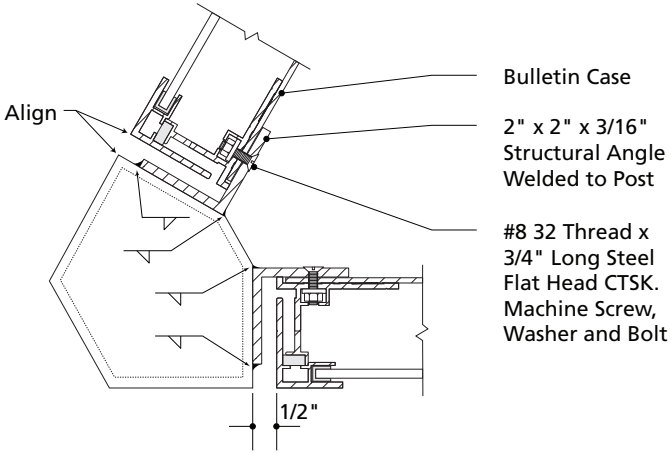

1-TR - 03 Bulletin Cases Top Cross Section

Scale: 3" = 1'-0"

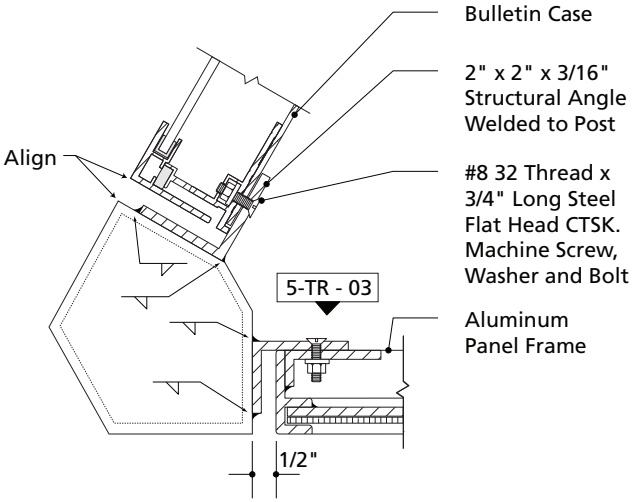

2-TR - 03 Bulletin Cases, Panel Frames Top Cross Section

Scale: 3" = 1'-0"

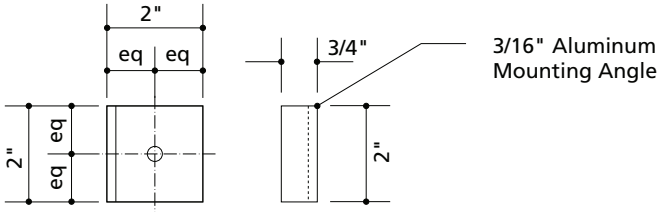

3-TR - 03 Mounting Angle Front and Side Elevations

Scale: 3" = 1'-0"

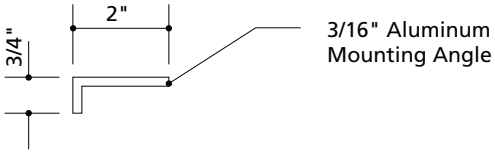

4-TR - 03 Mounting Angle Plan View

Scale: 3" = 1'-0"

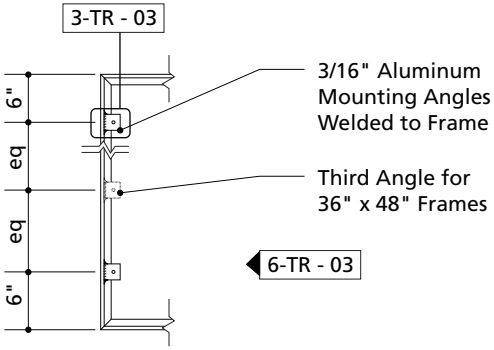

5-TR - 03 Frame Back, Mounting Detail

Scale: 1/2" = 1'-0"

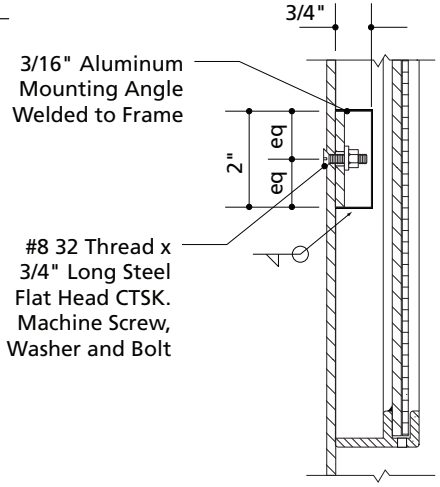

6-TR - 03 Frame Side Section

Scale: 3" = 1'-0"

TR - 03

Upright Tri-Sided Series (UPTR) with Roof

Aluminum Fabrication

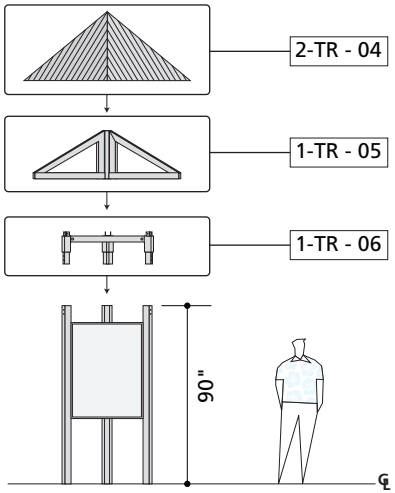

1-TR - 04 36" 48" Upright Tri-Sided Elevation

Scale: 1/8" = 1'-0"

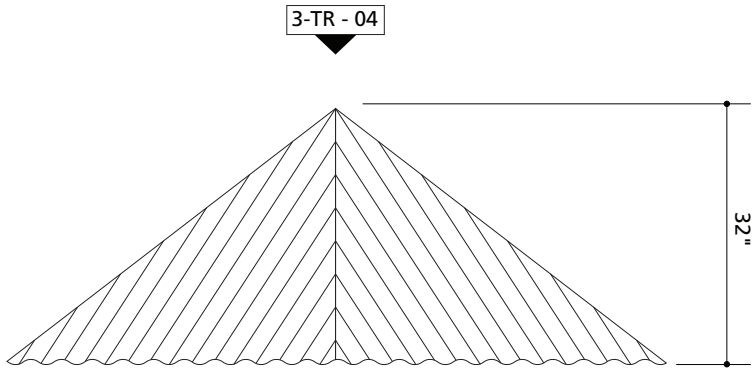

2-TR - 04 Roof Cap Elevation

Scale: 1/2" = 1'-0"

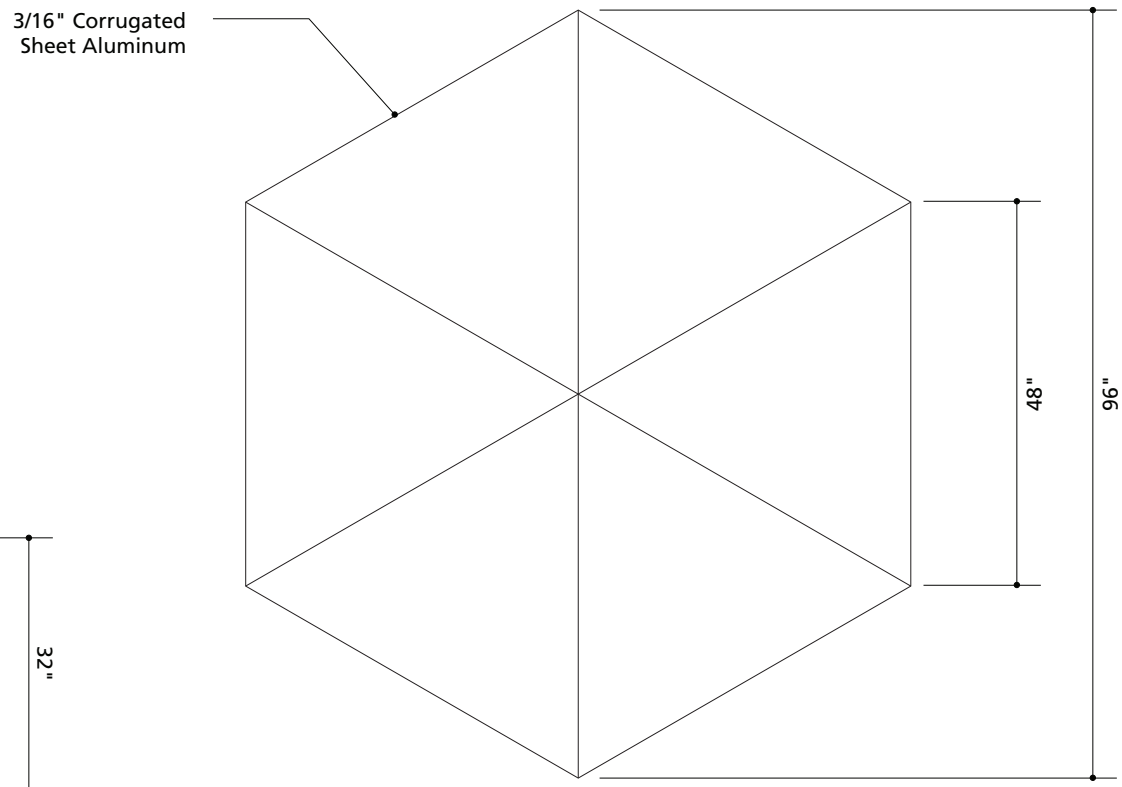

3-TR - 04 Roof Cap Plan View

Scale: 1/2" = 1'-0"

TR - 04

Upright Tri-Sided Series (UPTR) with Roof

Aluminum Fabrication (Continued)

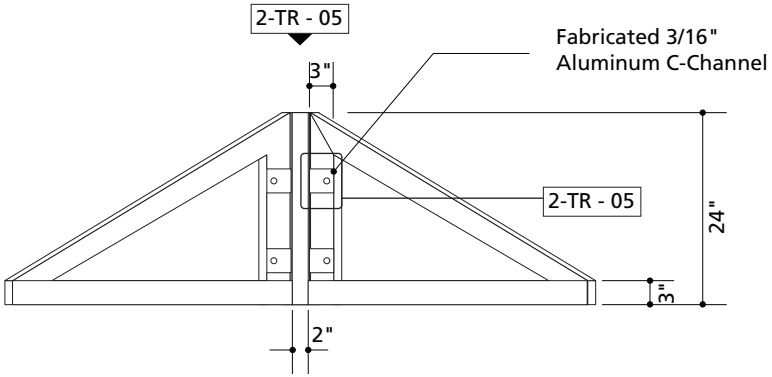

1-TR - 05 Spider Roof Elevation

Scale: 1/2" = 1'-0"

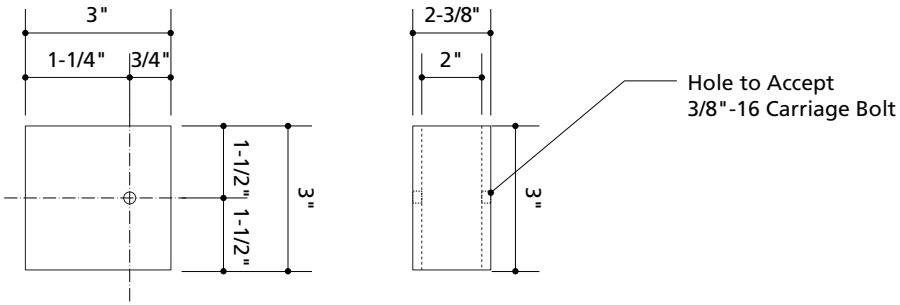

1-TR - 05 C-Channel Front and Side Elevations

Scale: 3" = 1'-0"

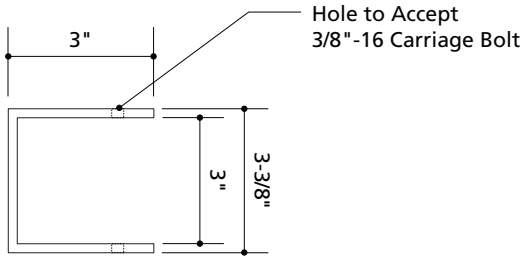

1-TR - 05 C-Channel Plan View

Scale: 3" = 1'-0"

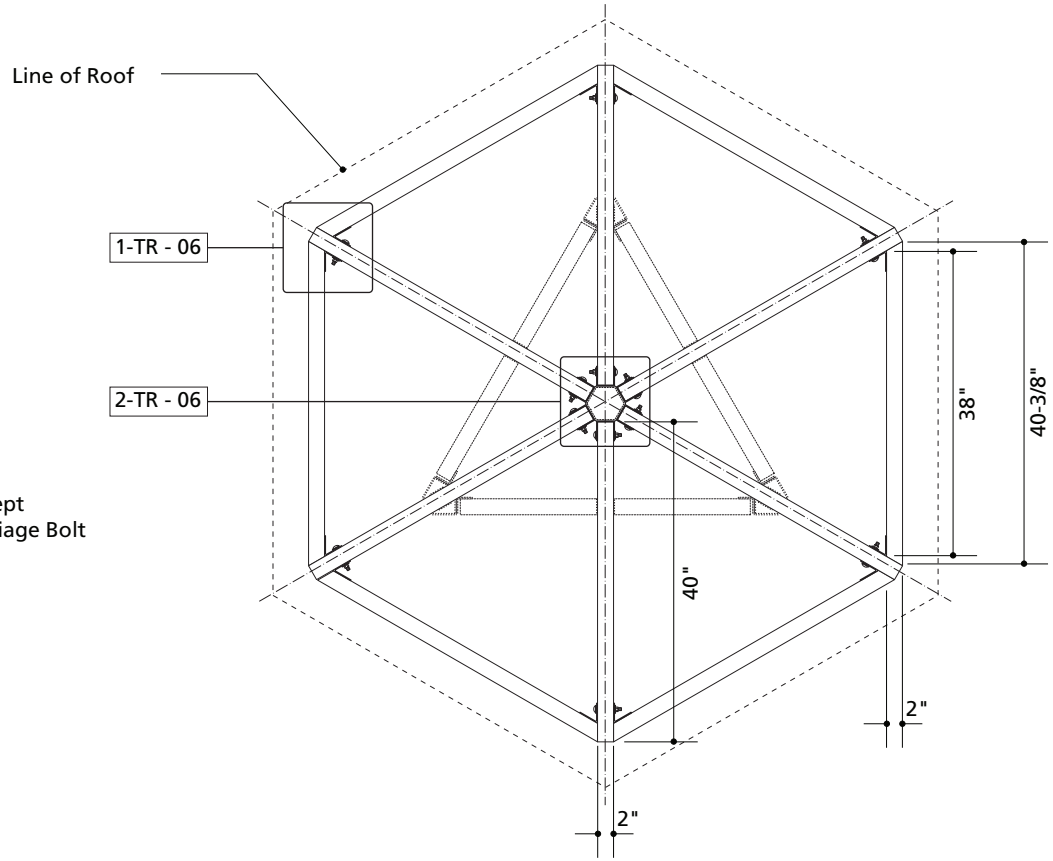

2-TR - 05 Spider Roof Plan View

Scale: 1/2" = 1'-0"

TR - 05

Upright Tri-Sided Series (UPTR) with Roof

Aluminum Fabrication (Continued)

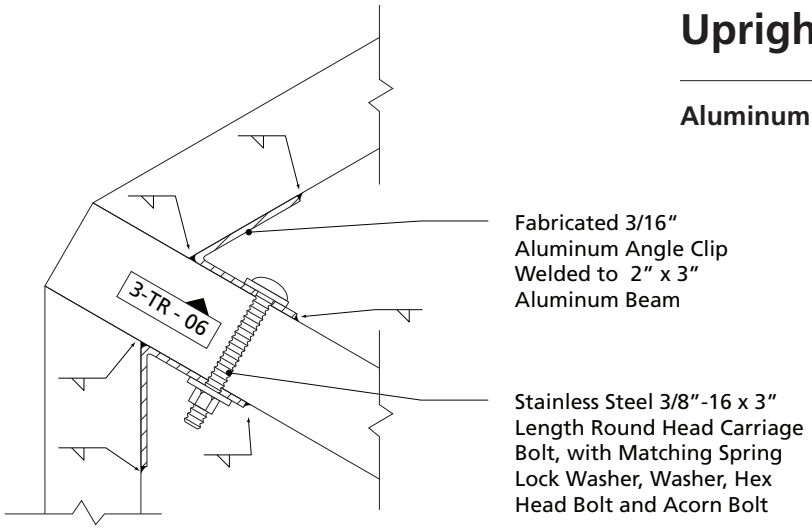

1-TR - 06 Connection Detail

3” = 1’-0”

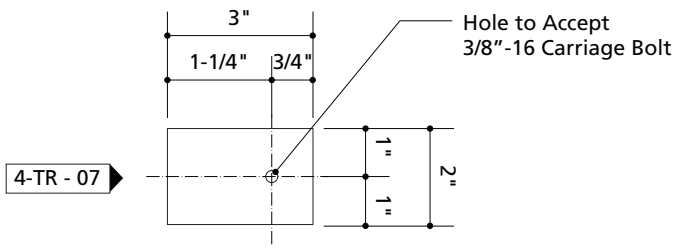

3-TR - 06 Angle Clip Front Elevation

Scale: 3” = 1’-0”

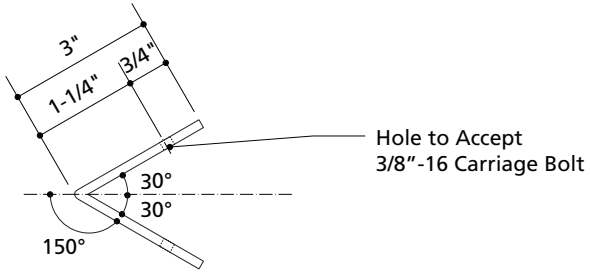

4-TR - 06 Angle Clip Plan View

Scale: 3” = 1’-0”

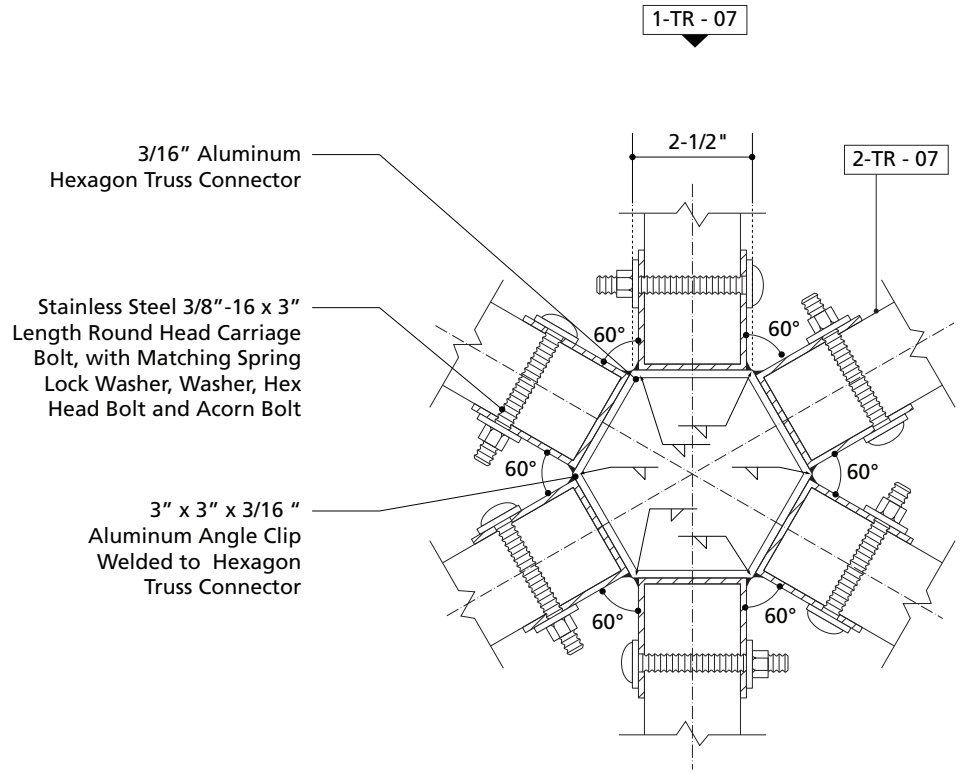

2-TR - 06 Connection Detail

3” = 1’-0”

TR - 06

Upright Tri-Sided Series (UPTR) with Roof

Aluminum Fabrication (Continued)

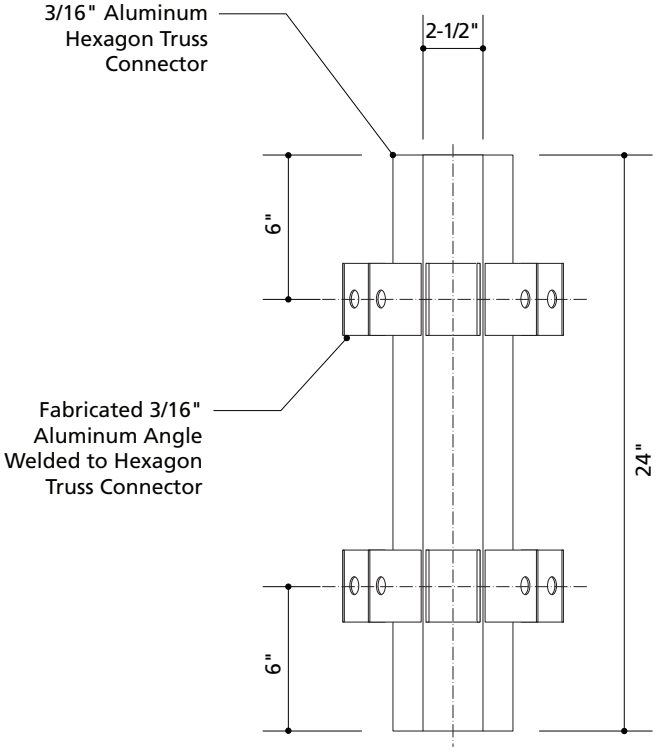

1- TR - 07 Hexagon Truss Connector Elevation

1-1/2" = 1'-0"

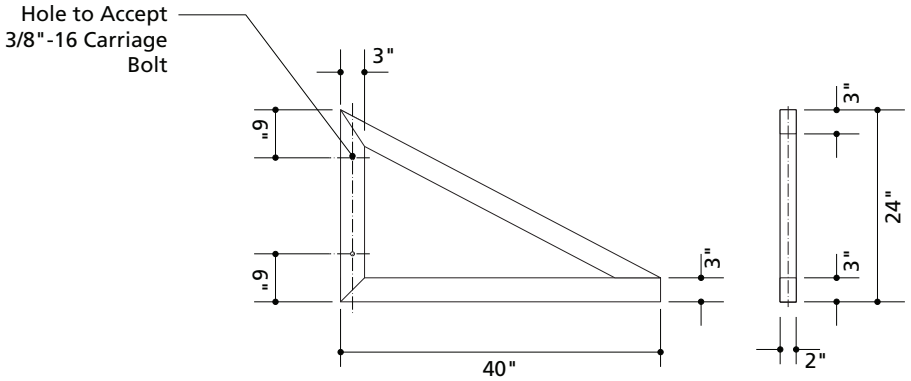

2- TR - 07 Roof Truss Front and Side Elevations

1/2" = 1'-0"

Upright Tri-Sided Series (UPTR) with Roof

Aluminum Fabrication (Continued)

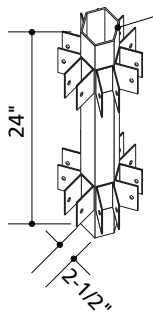

3" x 3" x 3/16"
Angle Clips Welded
to Hexagon Post
QTY: 1 per roof

Hexagon Truss Connector

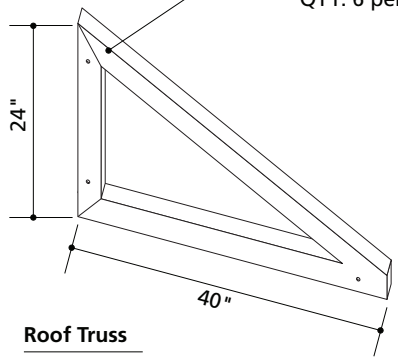

2" x 3" Aluminum
QTY: 6 per roof

Roof Truss

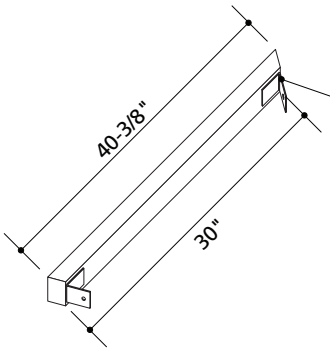

3" x 2" x 3/16"
Angle Welded to
2" x 3" Beam
QTY: 6 per roof

Fascia Beam

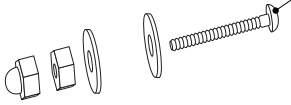

Stainless Steel 3/8"-16 x 3"
Length Round Head Carriage
Bolt, with matching Spring
Lock Washer, Washer, Hex
Head Bolt and Acorn Bolt
QTY: 18 per roof

Connection Hardware

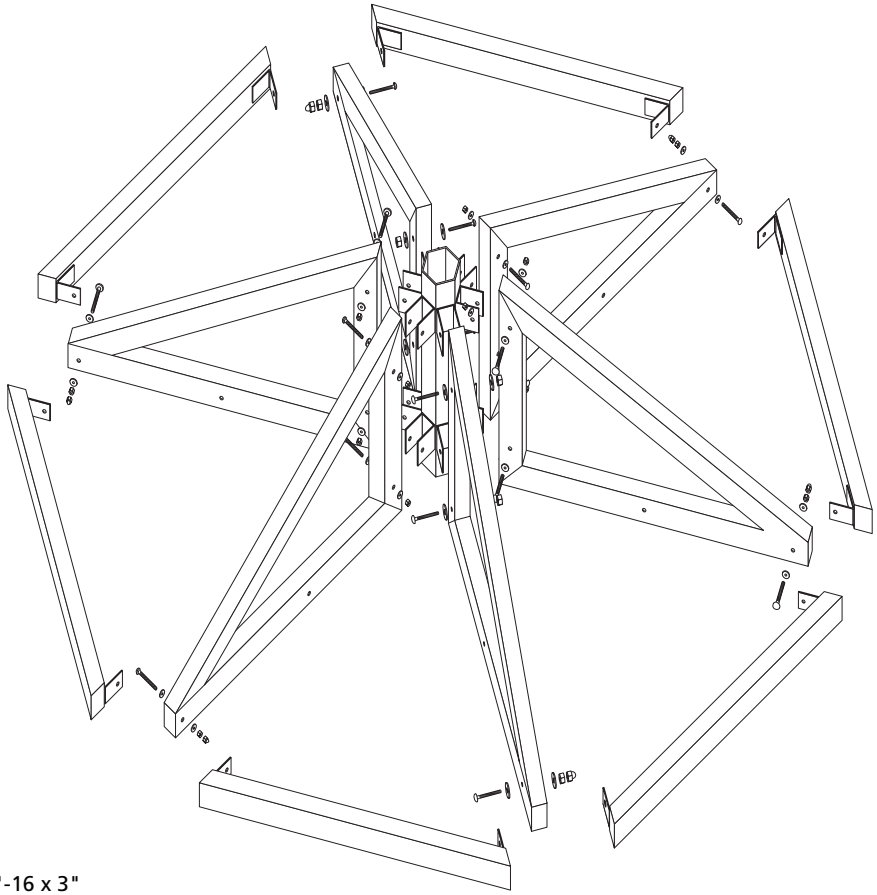

TR - 08

Upright Tri-Sided Series (UPTR) with Roof

Aluminum Fabrication (Continued)

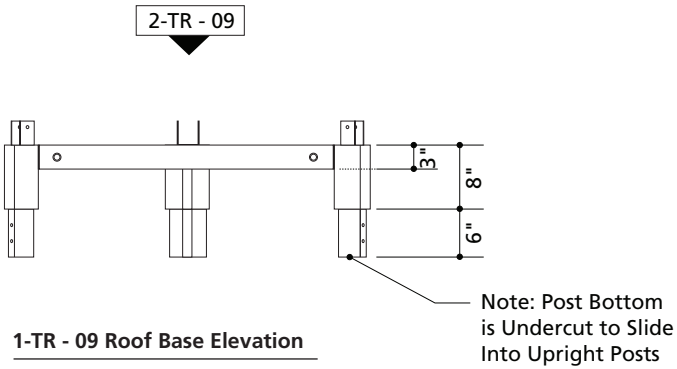

1-TR - 09 Roof Base Elevation

Scale: 1/2" = 1'-0"

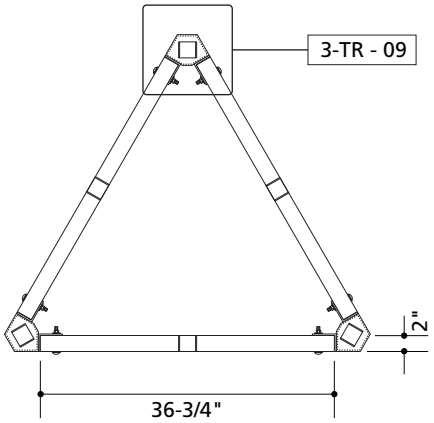

2-TR - 09 Roof Base Plan View

Scale: 1/2" = 1'-0"

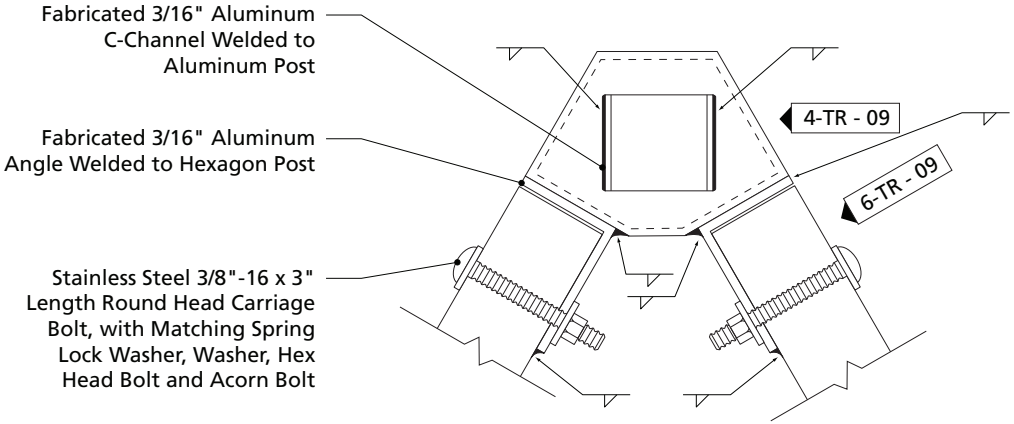

3-TR - 09 Connection Detail

Scale: 3" = 1'-0"

Upright Tri-Sided Series (UPTR) with Roof

Aluminum Fabrication (Continued)

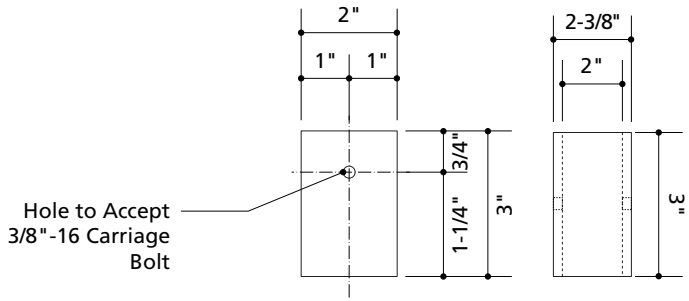

1-TR - 10 C-Channel Front and Side Elevations

Scale: 3" = 1'-0"

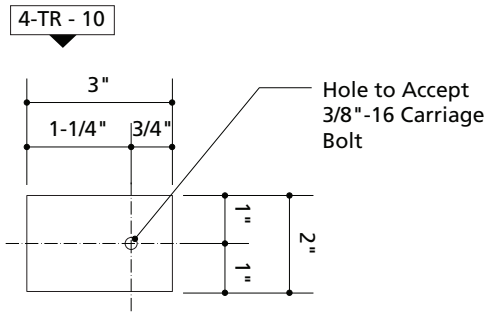

3-TR - 10 Angle Clip Front Elevation

Scale: 3"=1/2" = 1'-0"

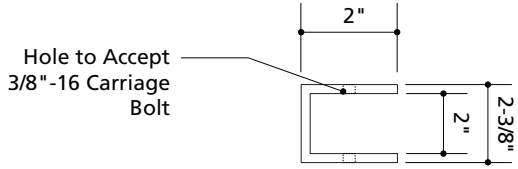

2-TR - 10 C-Channel Plan View

Scale: 3" = 1'-0"

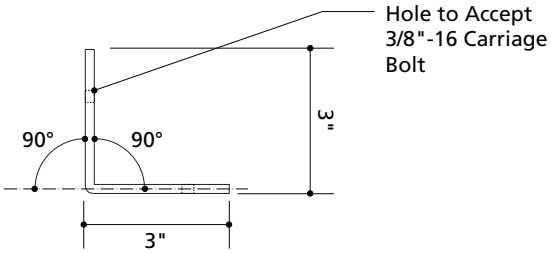

4-TR - 10 Angle Clip Plan View

Scale: 3"=1/2" = 1'-0"

Upright Tri-Sided Series (UPTR) with Roof

Aluminum Fabrication (Continued)

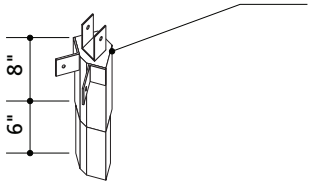

2" x 3" x 3/16"
Aluminum Angle Clip
and 2" x 2" x 3/16"
Aluminum Angles
Welded to Custom
Aluminum Post
QTY: 3 per roof

Post Extender

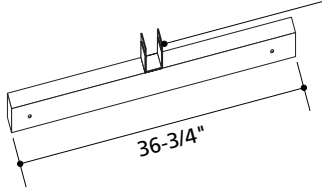

2" x 3" x 3/16" Aluminum
Angle Clip Welded to
2" x 3" Aluminum Beam
QTY: 3 per roof

Fascia Beam

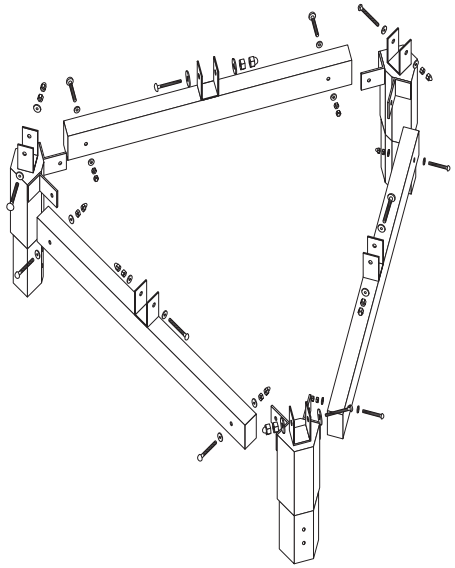

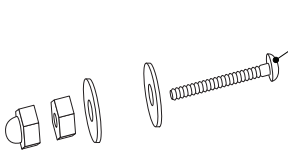

Stainless Steel 3/8"-16 x 3"
Length Round Head Carriage
Bolt, with Matching Spring
Lock Washer, Washer, Hex
Head Bolt and Acorn Bolt
QTY: 12 per roof

Connection Hardware

TR - 11

Upright Quad Series (UPQU)

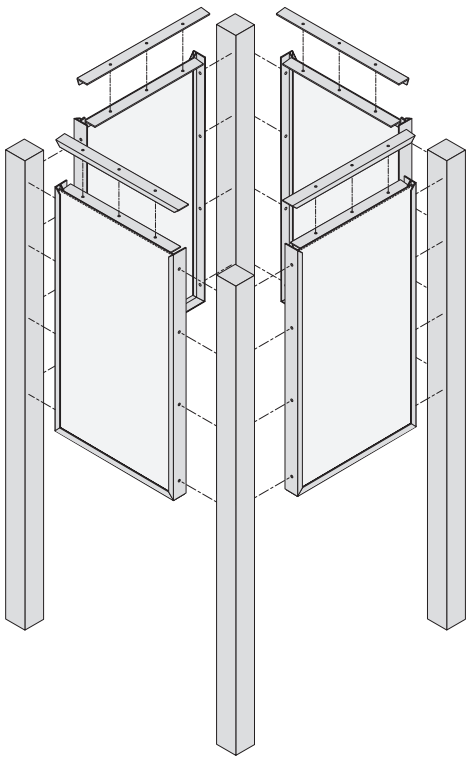

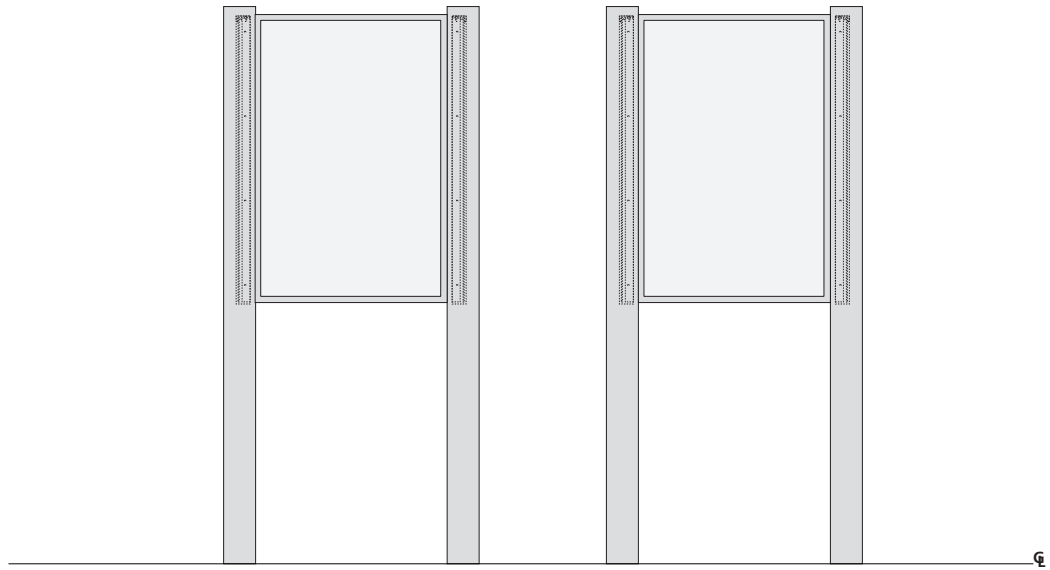

Upright Quad Series (UPQU)

Steel Fabrication

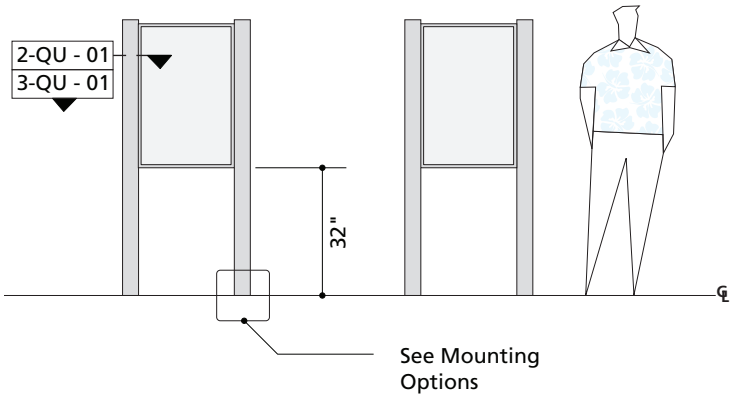

1-QU - 01 Upright Quad Elevation

Scale: 1/4" = 1'-0"

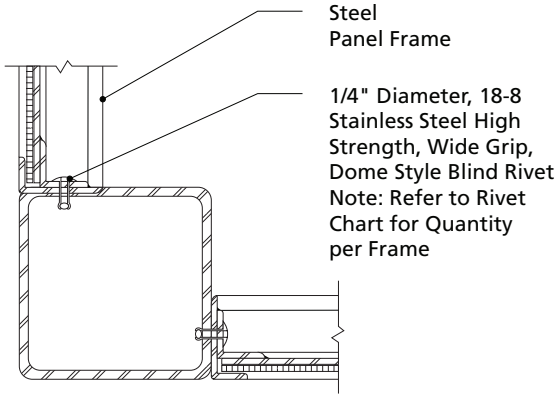

2-QU - 01 Steel Panel Frames, 4" x 4" Post

Scale: 3" = 1'-0"

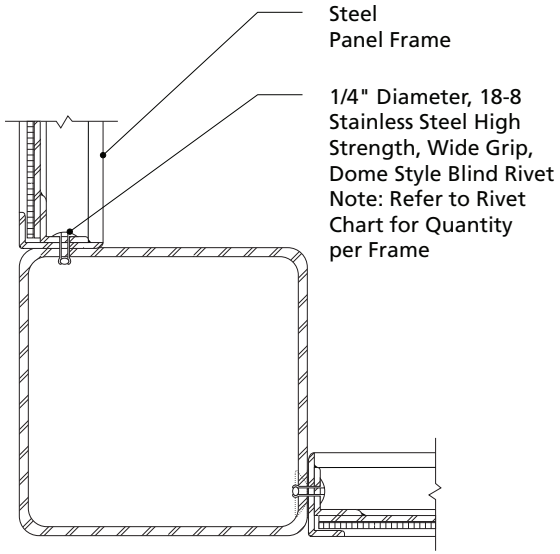

3-QU - 01 Steel Panel Frames, 6" x 6" Post

Scale: 3" = 1'-0"

QU - 01

Upright Quad Series (UPQU)

Aluminum Fabrication

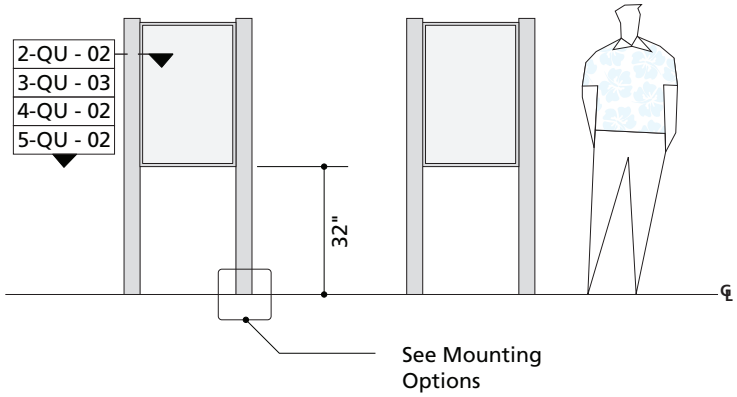

1-QU - 02 Upright Quad Elevation

Scale: 1/4" = 1'-0"

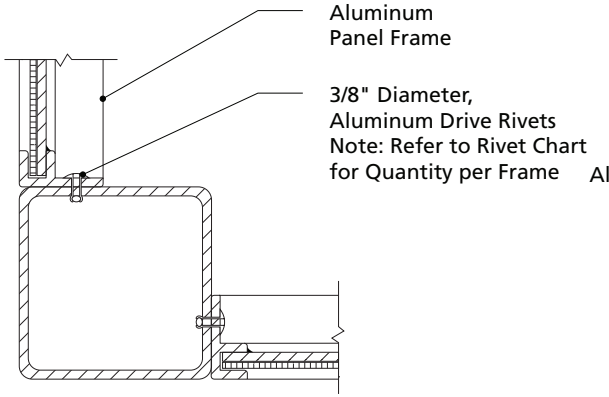

2-QU - 02 Aluminum Panel Frames, 4" x 4" Post

Scale: 3" = 1'-0"

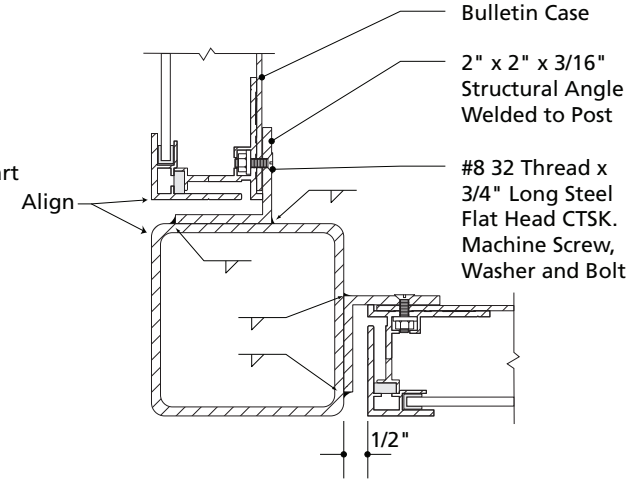

3-QU - 02 Bulletin Cases, 4" x 4" Post

Scale: 3" = 1'-0"

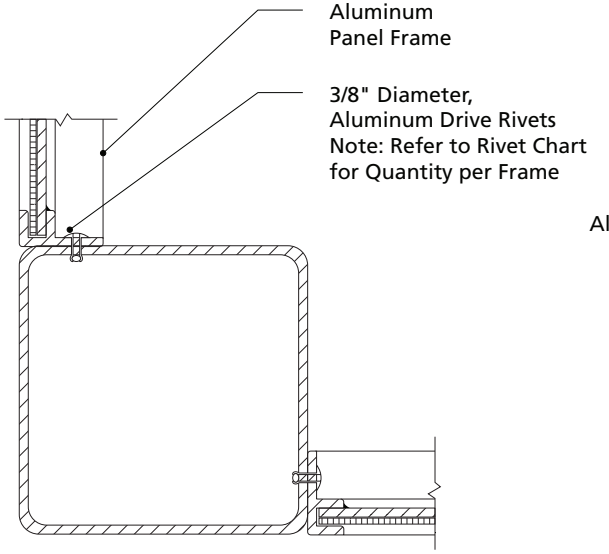

4-QU - 02 Aluminum Panel Frames, 6" x 6" Post

Scale: 3" = 1'-0"

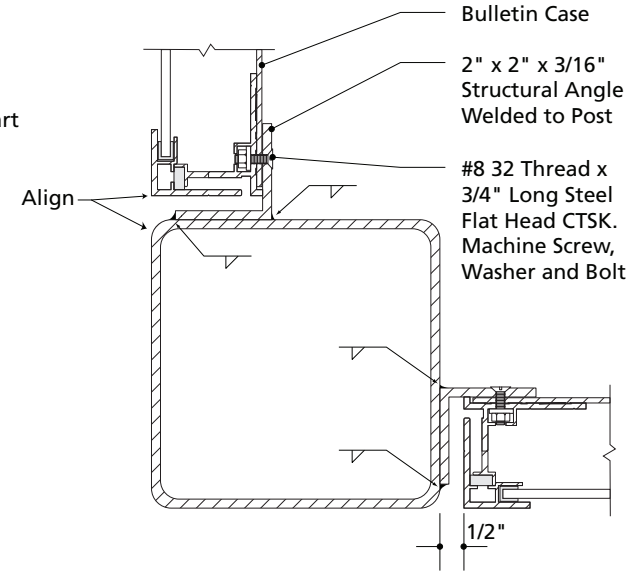

5-QU - 02 Bulletin Cases, 6" x 6" Post

Scale: 3" = 1'-0"

QU - 02

Upright Quad Series (UPQU)

Aluminum Fabrication (Continued)

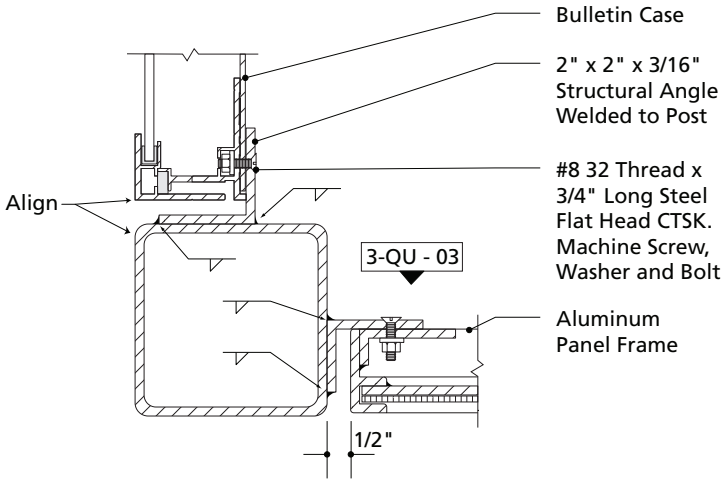

1-QU - 03 Bulletin Cases and Panel Frames, 4" x 4" Post

Scale: 3" = 1'-0"

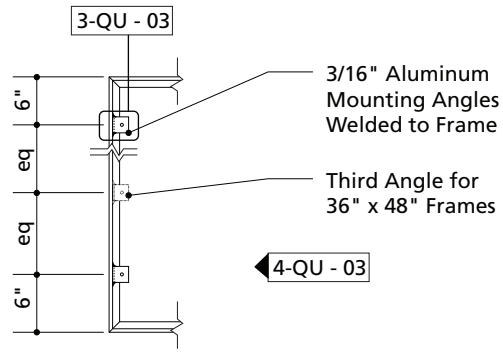

3-QU - 03 Frame Back, Mounting Detail

Scale: 1/2" = 1'-0"

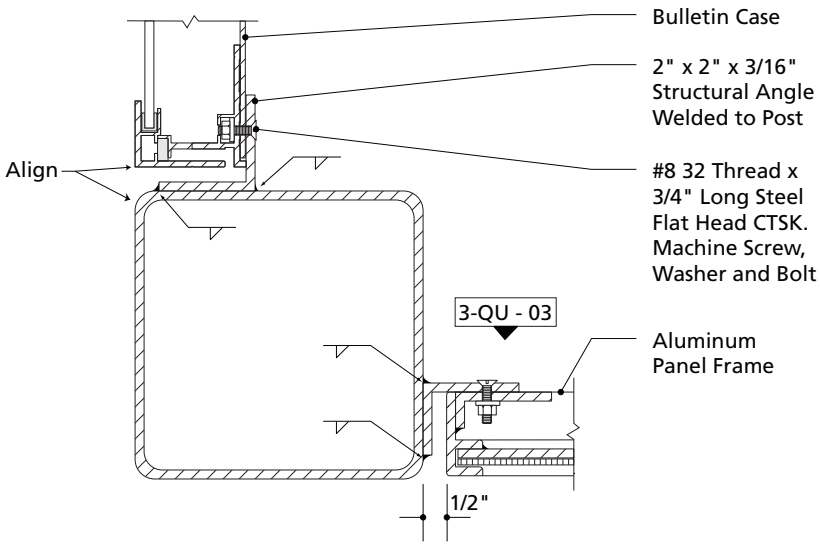

2-QU - 03 Bulletin Cases and Panel Frames, 6" x 6" Post

Scale: 3" = 1'-0"

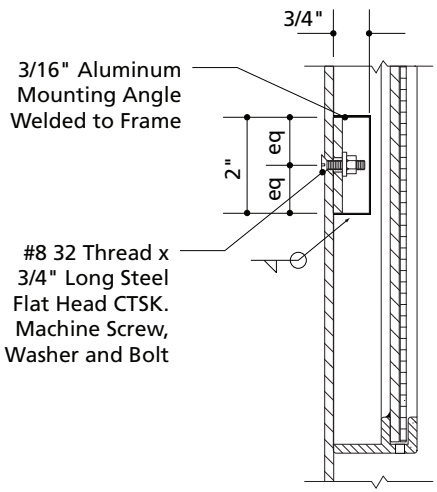

4-QU - 03 Frame Side Section

Scale: 3" = 1'-0"

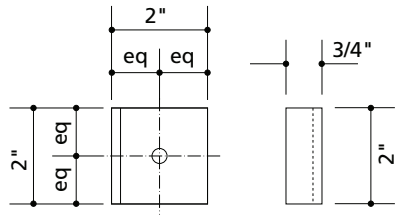

3-QU - 03 Mounting Angle Front and Side Elevations

Scale: 3" = 1'-0"

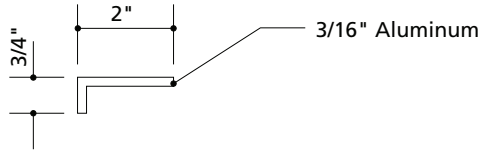

5-QU - 03 Mounting Angle Plan View

Scale: 3" = 1'-0"

QU - 03

Upright Quad Series (UPQU) with Roof

Aluminum Fabrication

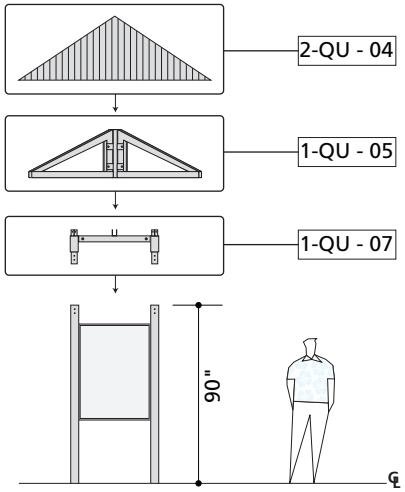

1-QU - 04 36" 48" Upright Tri-Sided Elevation

Scale: 1/8" = 1'-0"

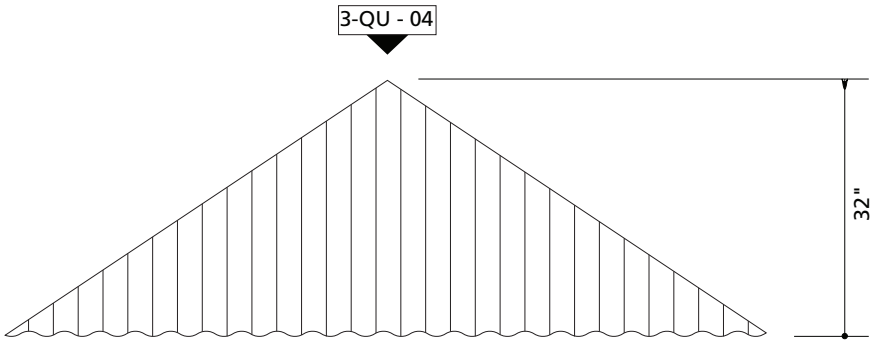

2-QU - 04 Roof Cap Elevation

Scale: 1/2" = 1'-0"

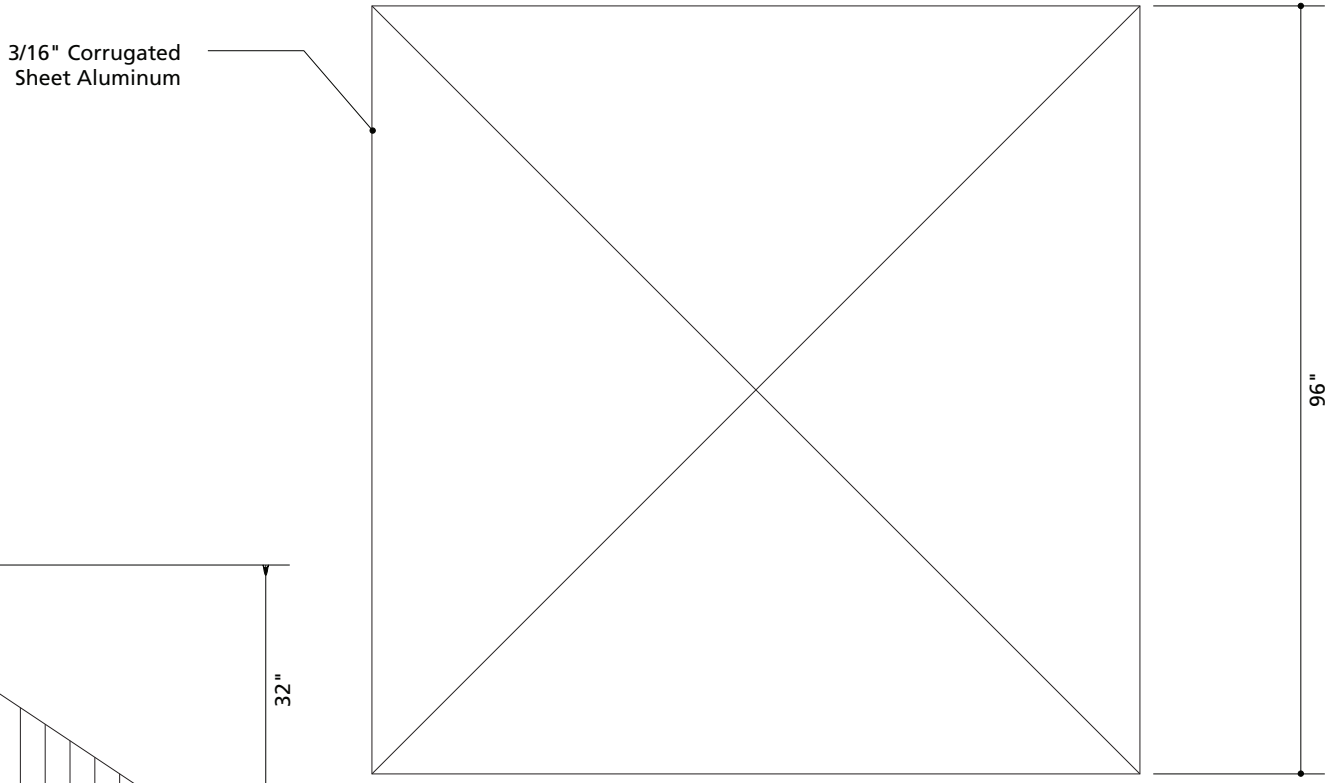

3-QU - 04 Roof Cap Plan View

Scale: 1/2" = 1'-0"

Upright Quad Series (UPQU) with Roof

Aluminum Fabrication (Continued)

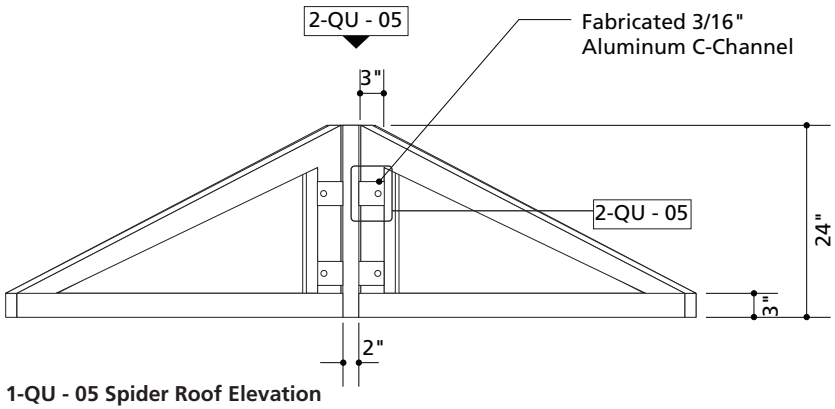

1-QU - 05 Spider Roof Elevation

Scale: 1/2" = 1'-0"

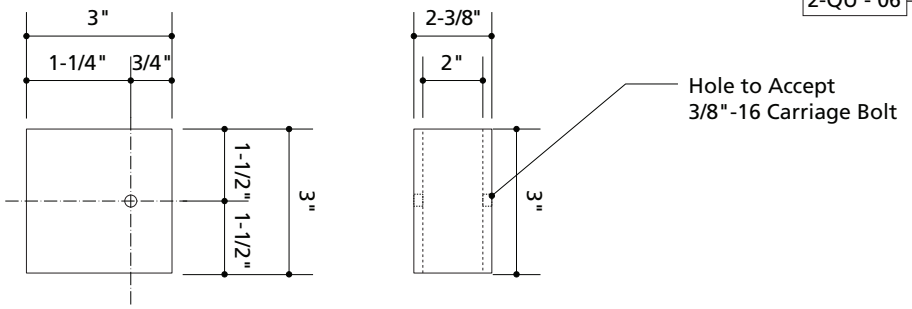

1-QU - 05 C-Channel Front and Side Elevations

Scale: 3" = 1'-0"

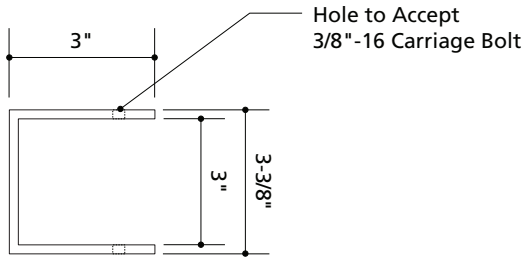

1-QU - 05 C-Channel Plan View

Scale: 3" = 1'-0"

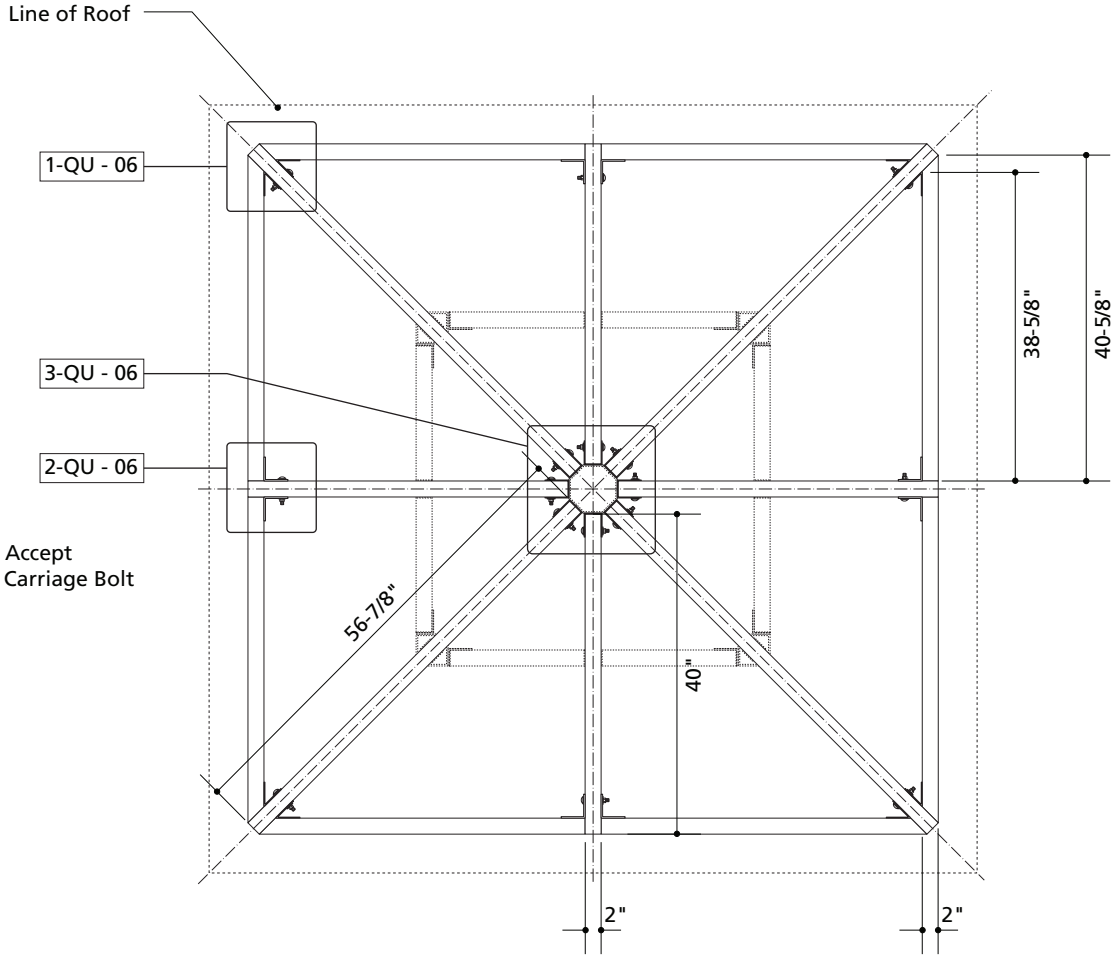

2-QU - 05 Spider Roof Plan View

Scale: 1/2" = 1'-0"

QU - 05

Upright Quad Series (UPQU) with Roof

Aluminum Fabrication (Continued)

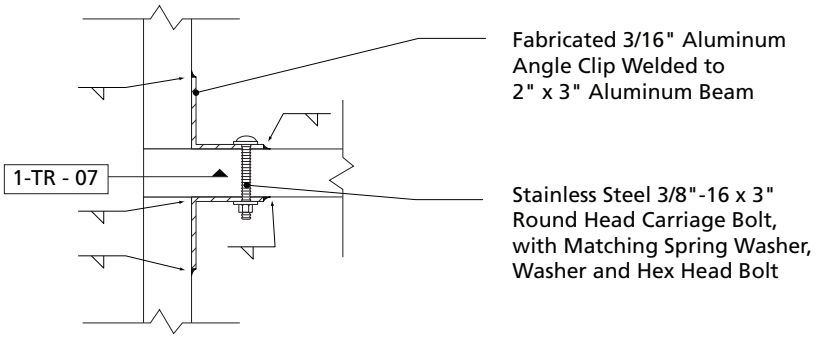

1-QU - 06 Connection Detail at Middle

1-1/2" = 1'-0"

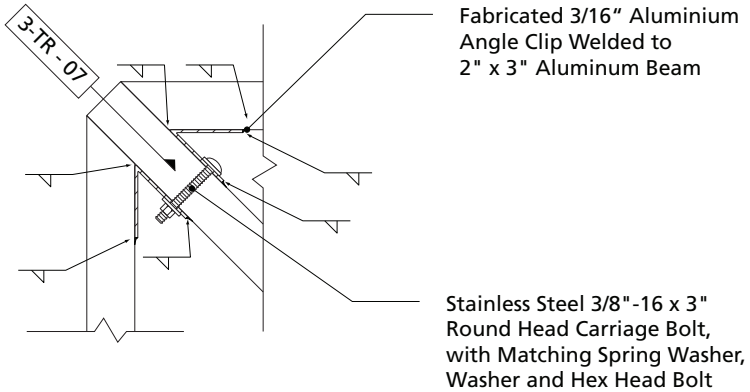

2-QU - 06 Connection Detail at Corner

1-1/2" = 1'-0"

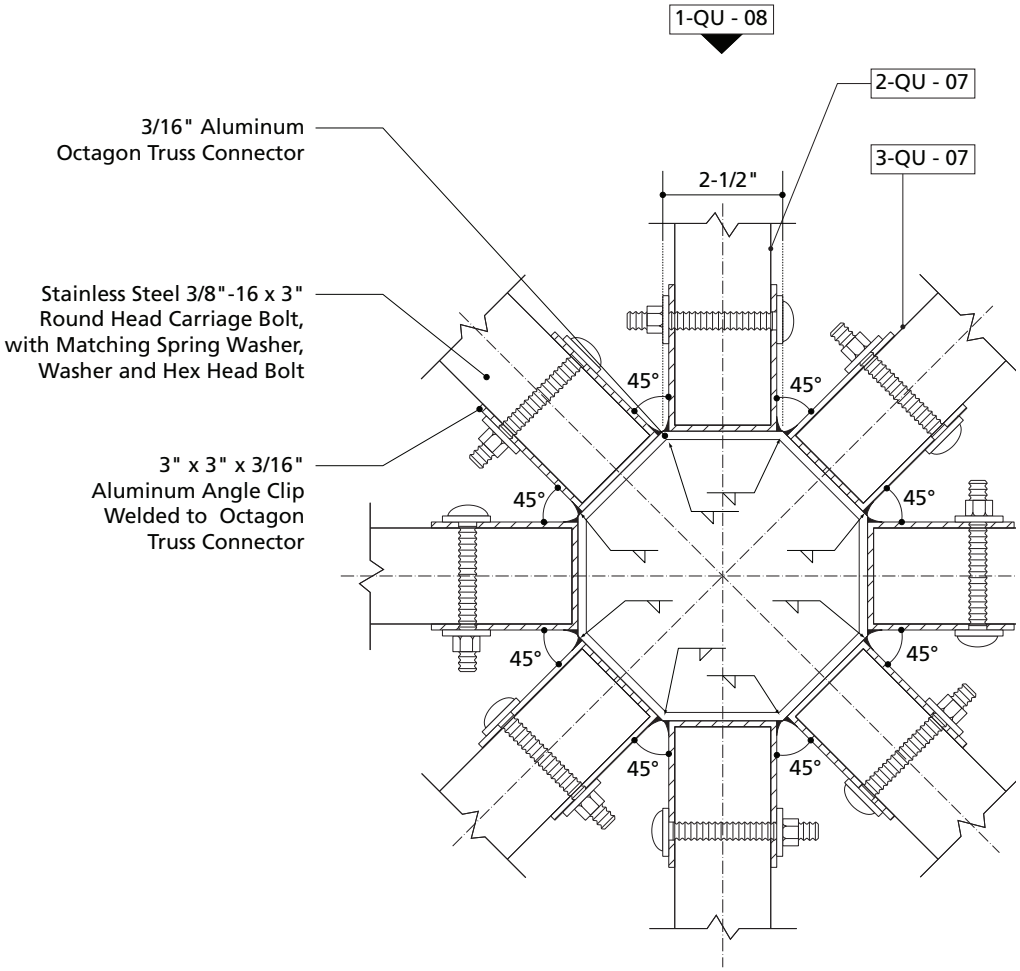

3-QU - 06 Connection Detail at Center

3" = 1'-0"

Upright Quad Series (UPQU) with Roof

Aluminum Fabrication (Continued)

2-TR - 07

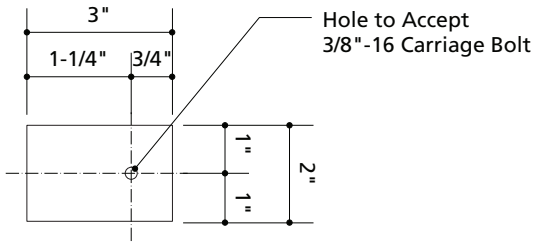

1-TR - 07 Angle Clip Front Elevation

Scale: 3" = 1'-0"

4-TR - 07

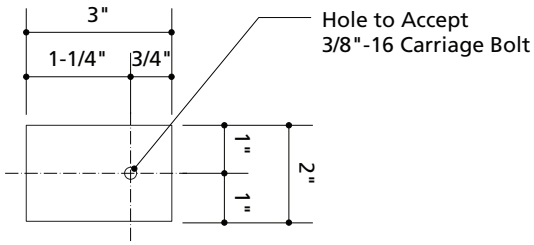

3-TR - 07 Angle Clip Front Elevation

Scale: 3" = 1'-0"

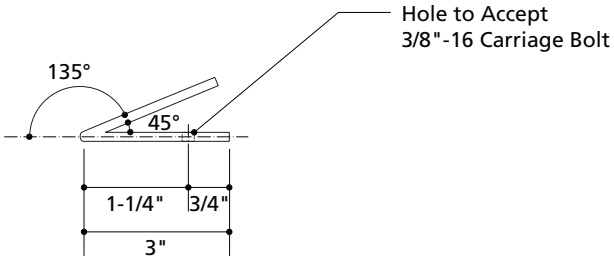

2-TR - 07 Angle Clip Plan View

Scale: 3" = 1'-0"

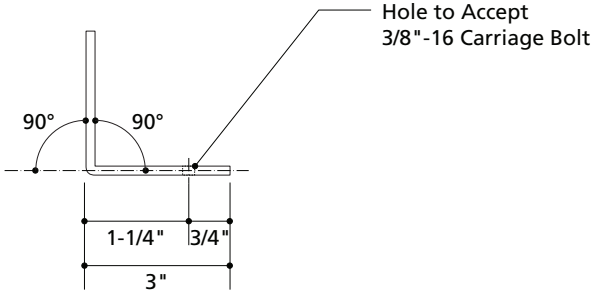

4-TR - 07 Angle Clip Plan View

Scale: 3" = 1'-0"

QU - 07

Upright Quad Series (UPQU) with Roof

Aluminum Fabrication (Continued)

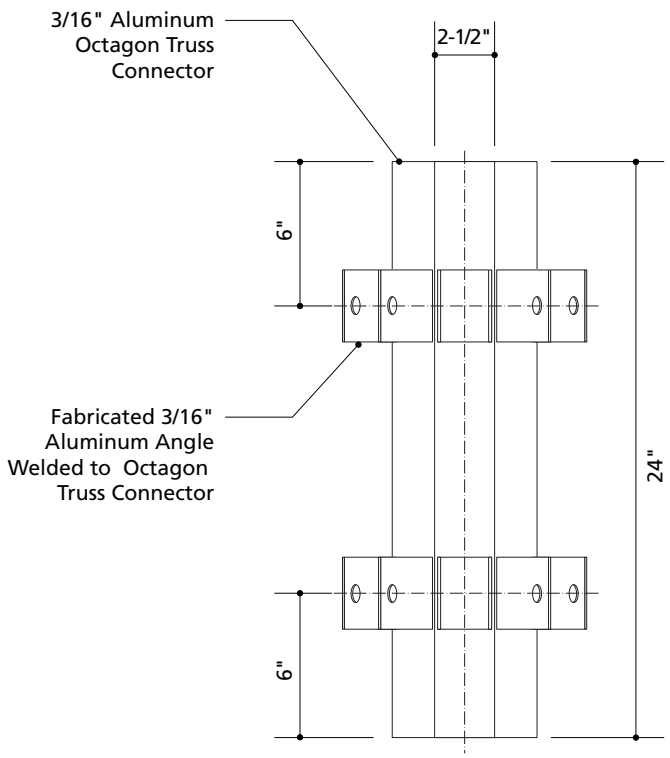

1-QU - 08 Octagon Truss Connector Elevation

1-1/2" = 1'-0"

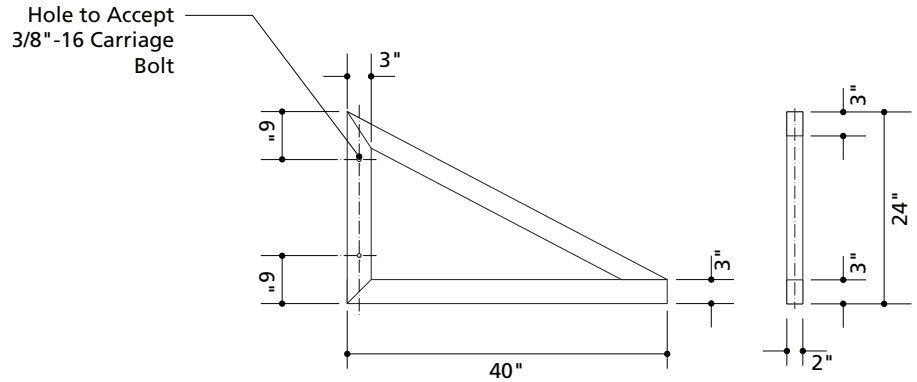

2-QU - 08 Roof Structure Front and Side Elevations

1/2" = 1'-0"

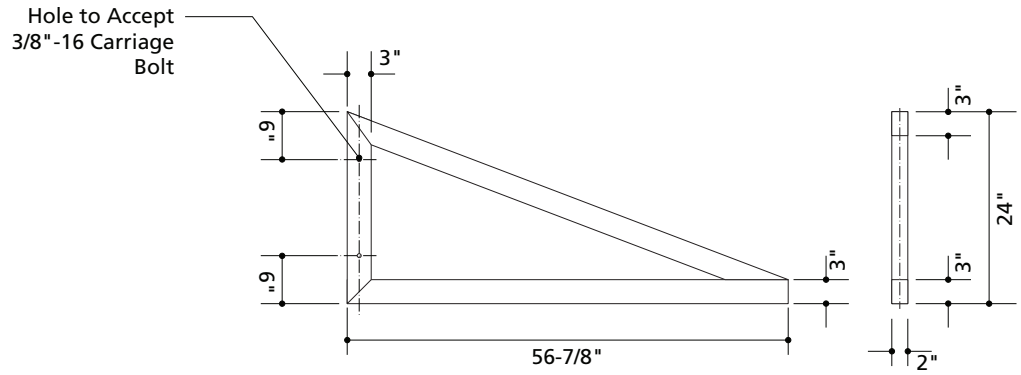

3-QU - 08 Roof Structure Front and Side Elevations

1/2" = 1'-0"

Upright Quad Series (UPQU) with Roof

Aluminum Fabrication (Continued)

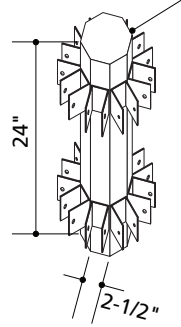

3" x 3" x 3/16"
Angle Clips Welded
to Octogan Post
QTY: 1 per roof

Octogon Truss Connector

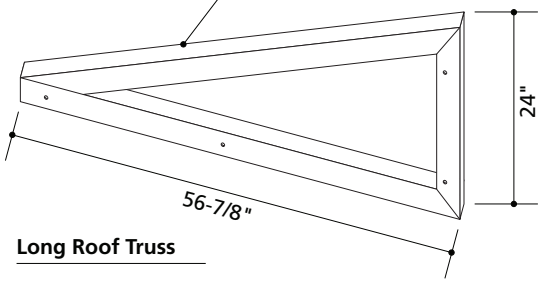

2" x 3" Aluminum
QTY: 4 per roof

Long Roof Truss

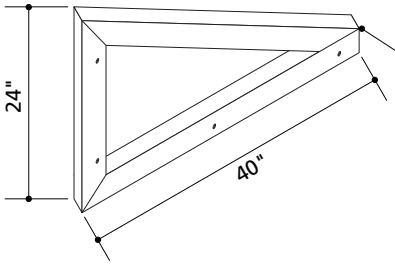

2" x 3" Aluminum
QTY: 4 per roof

Short Roof Truss

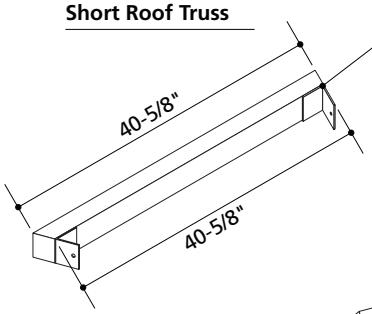

3" x 2" x 3/16"
Angle Welded to
2" x 3" Beam
QTY: 8 per roof

Fascia Beam

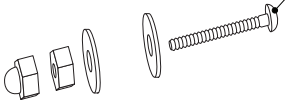

Stainless Steel 3/8"-16 x 3"
Length Round Head Carriage
Bolt, with Matching Spring
Lock Washer, Washer, Hex
Head Bolt and Acorn Bolt
QTY: 24 per roof

Connection Hardware

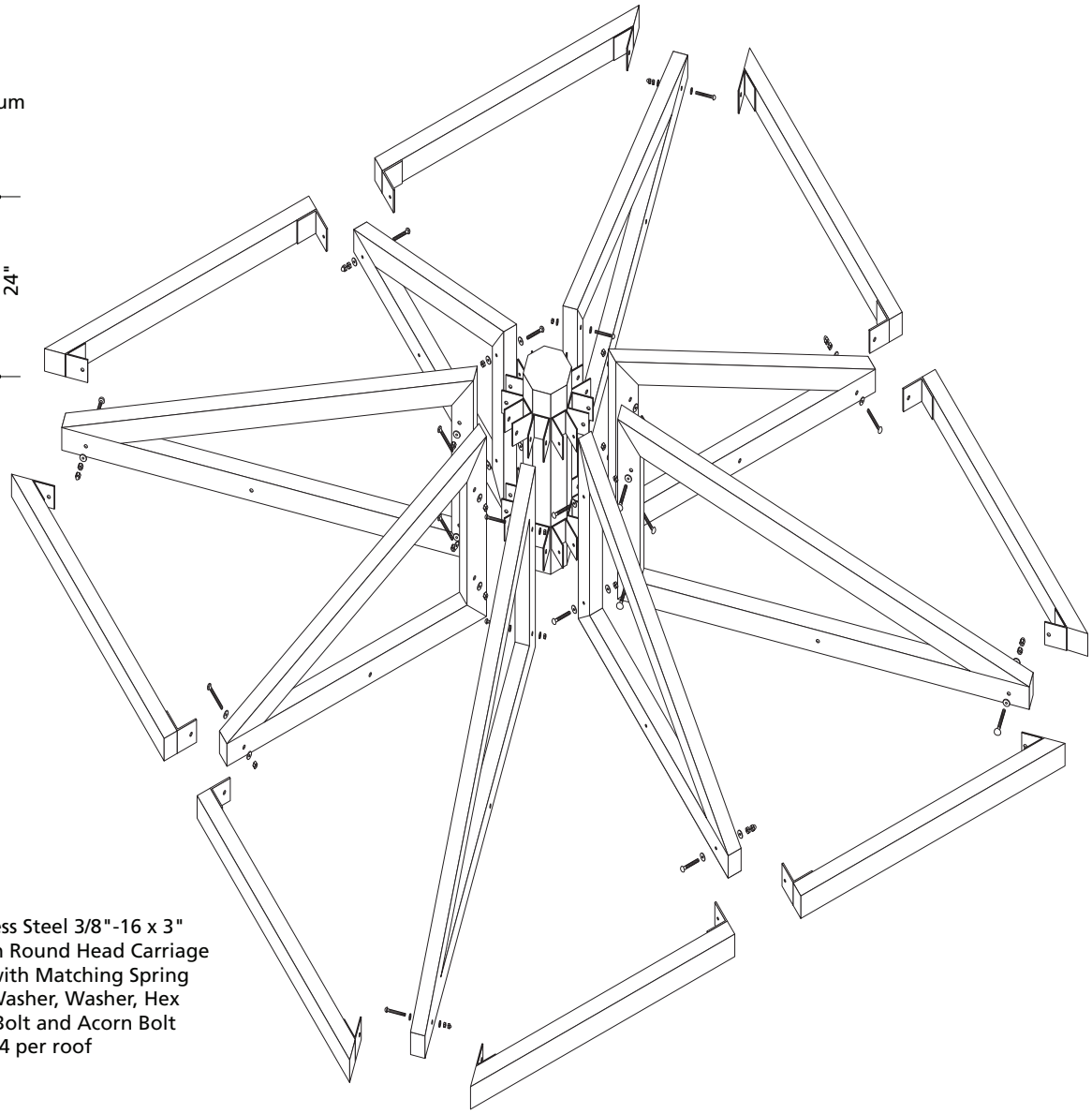

QU - 09

Upright Quad Series (UPQU) with Roof

Aluminum Fabrication (Continued)

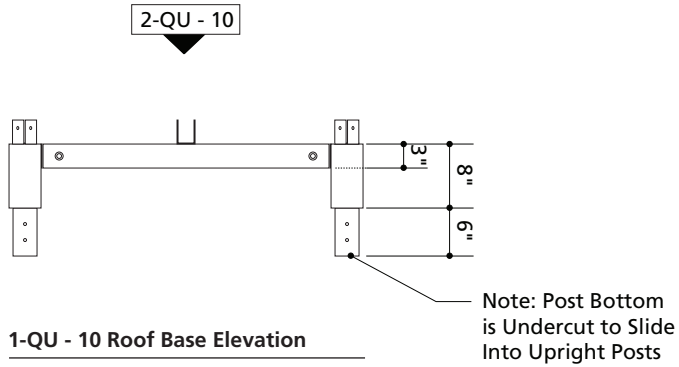

1-QU - 10 Roof Base Elevation

Scale: 1/2" = 1'

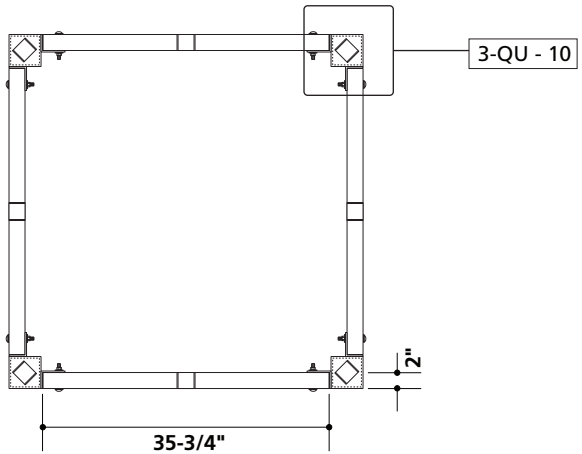

2-QU - 10 Roof Base Plan View

Scale: 1/2" = 1'

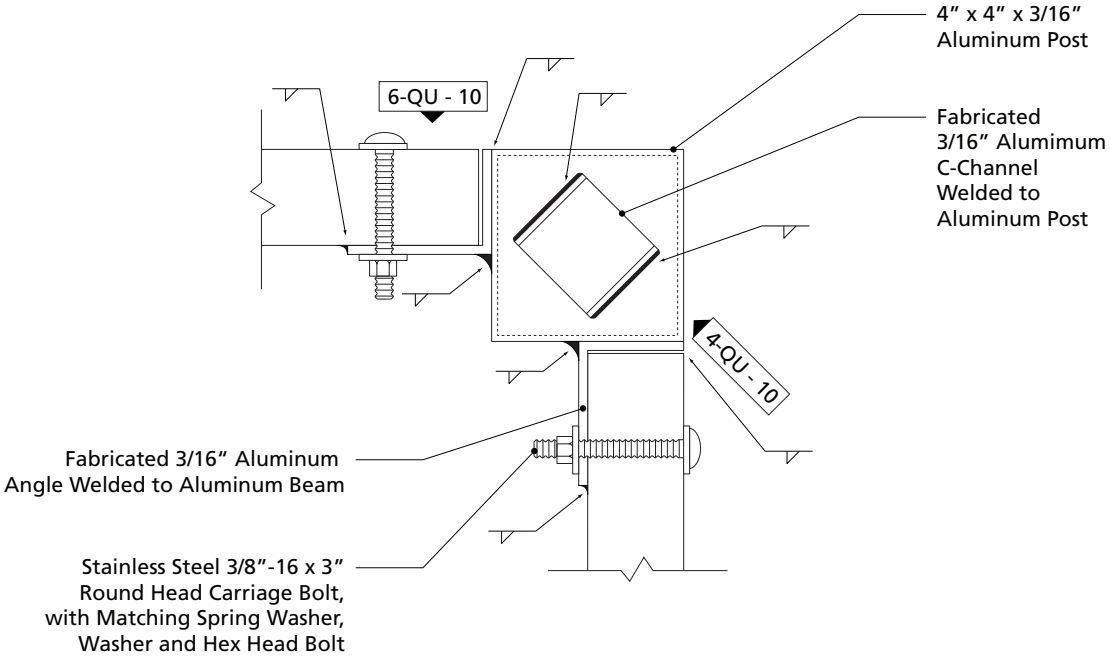

3-QU - 10 Connection Detail

Scale: 3" = 1'

Upright Quad Series (UPQU) with Roof

Aluminum Fabrication (Continued)

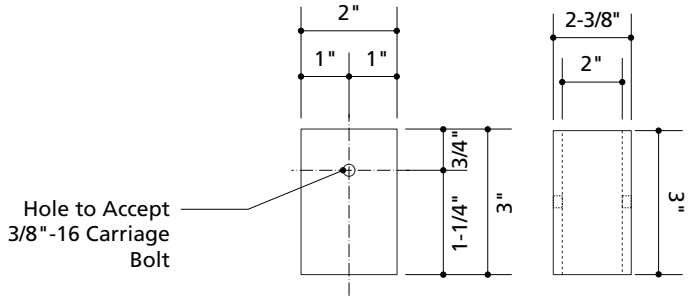

1-QU - 11 C-Channel Front and Side Elevations

Scale: 3" = 1'-0"

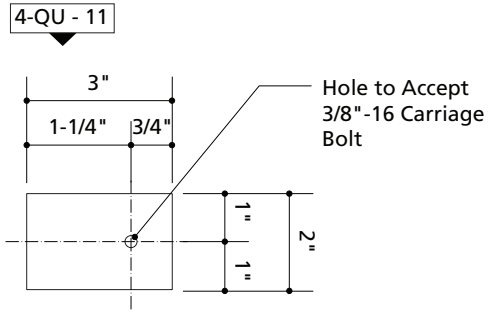

3-QU - 11 Angle Clip Front Elevation

Scale: 3" = 1'-0"

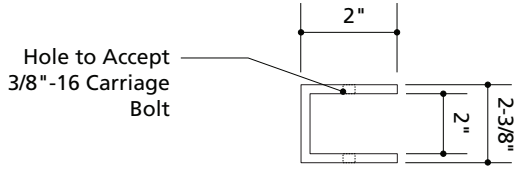

2-QU - 11 C-Channel Plan View

Scale: 3" = 1'-0"

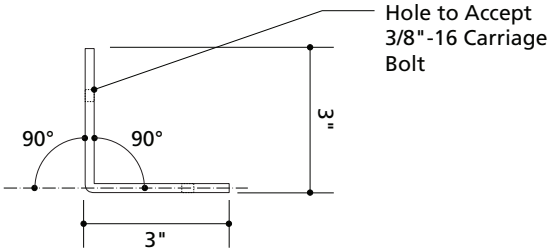

4-QU - 11 Angle Clip Plan View

Scale: 3" = 1'-0"

Upright Quad Series (UPQU) with Roof

Aluminum Fabrication (Continued)

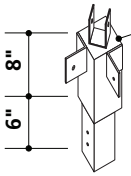

2" x 3" x 3/16" Aluminum Angle Clip and 2" x 2" x 3/16" Aluminum Angles Welded to Custom Aluminum Post
QTY: 4 per roof

Post Extender

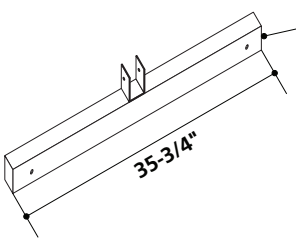

2" x 3" x 3/16" Aluminum Angle Clip Welded to 2" x 3" Aluminum Beam
QTY: 4 per roof

Fascia Beam

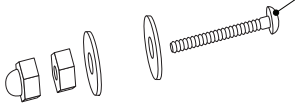

Stainless Steel 3/8"-16 x 3" Length Round Head Carriage Bolt, Washers, Hex Head Bolt and Acorn Bolt
QTY: 16 per roof

Connection Hardware

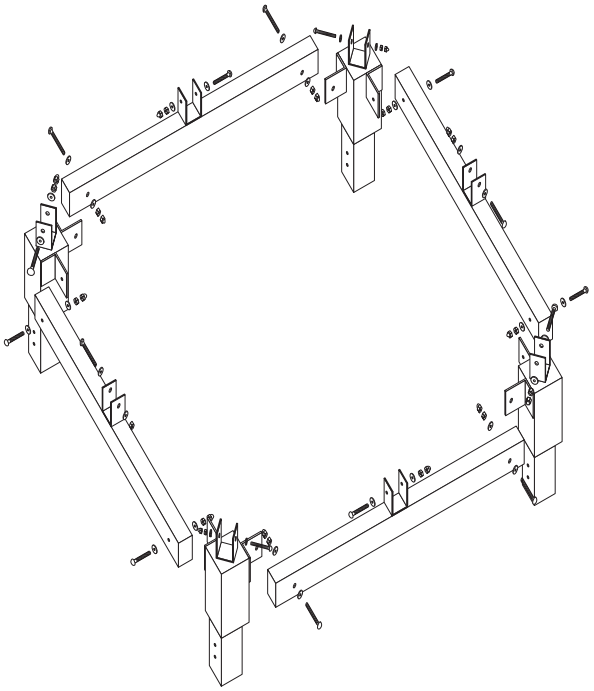

QU - 12

Bulletin Case with Posts (BC)

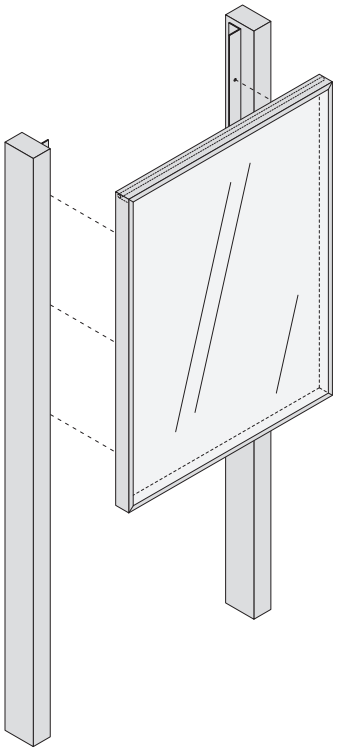

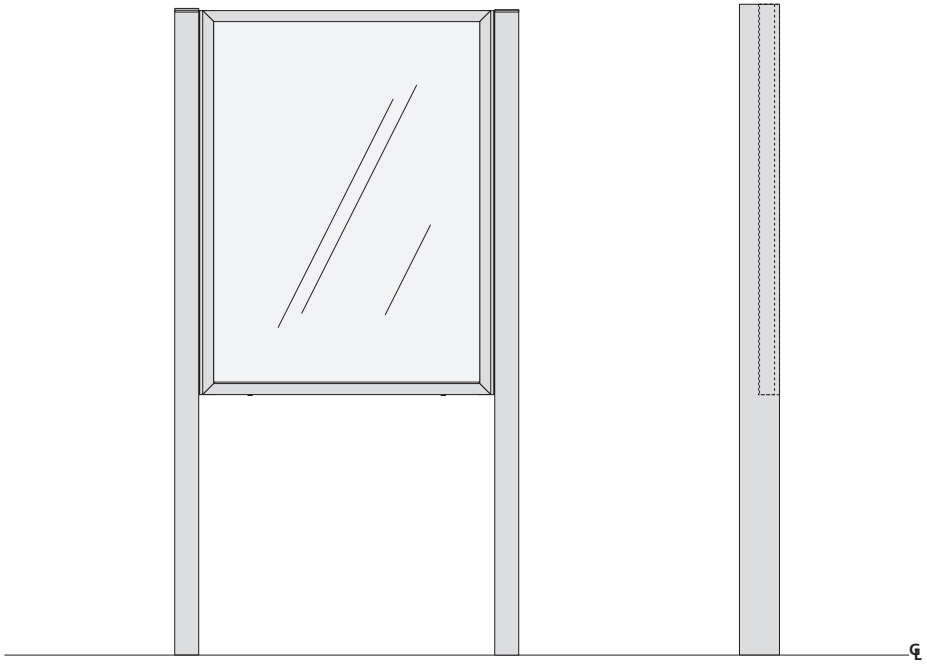

Bulletin Case with Posts (BC)

Aluminum Fabrication

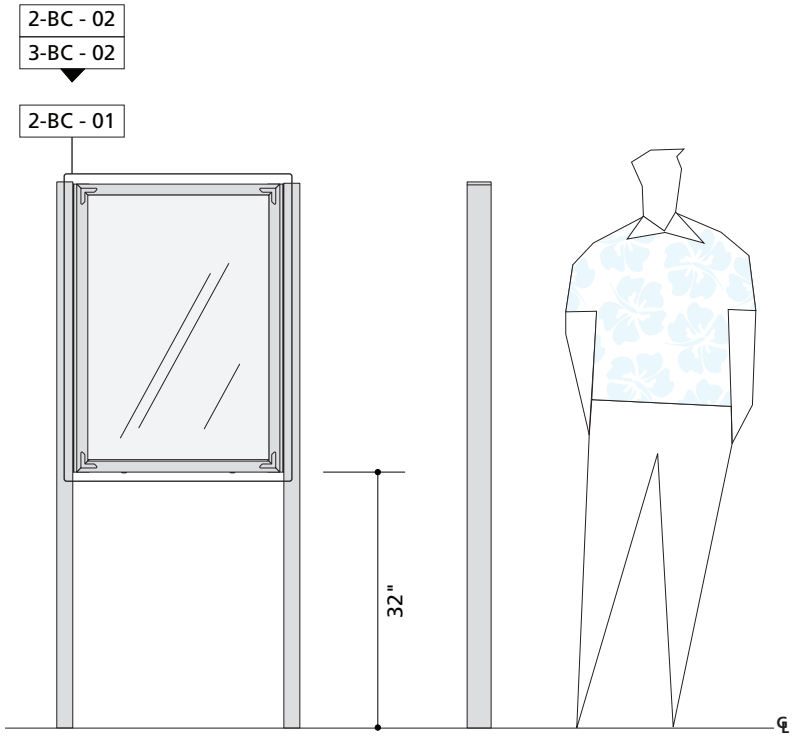

1-BC - 01 Bulletin Case Elevation

Scale: 1/2" = 1'-0"

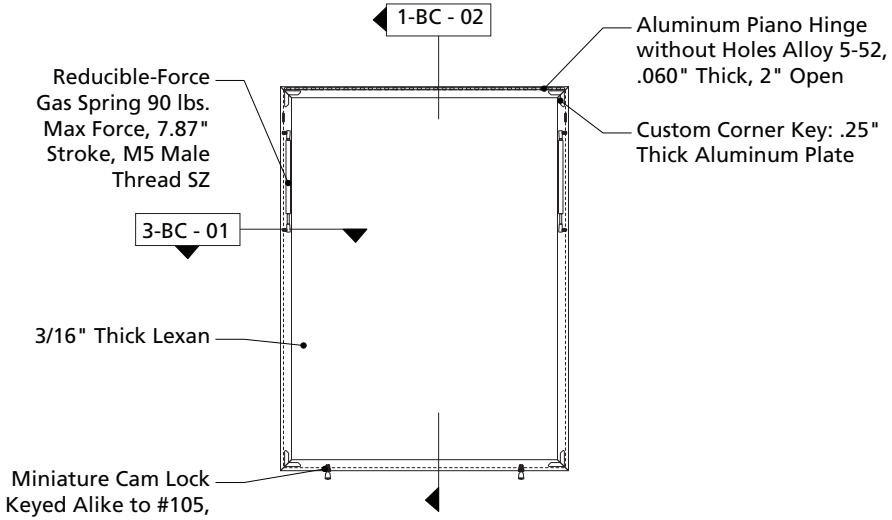

2-BC - 01 Bulletin Case Elevation

Scale: 1/2" = 1'-0"

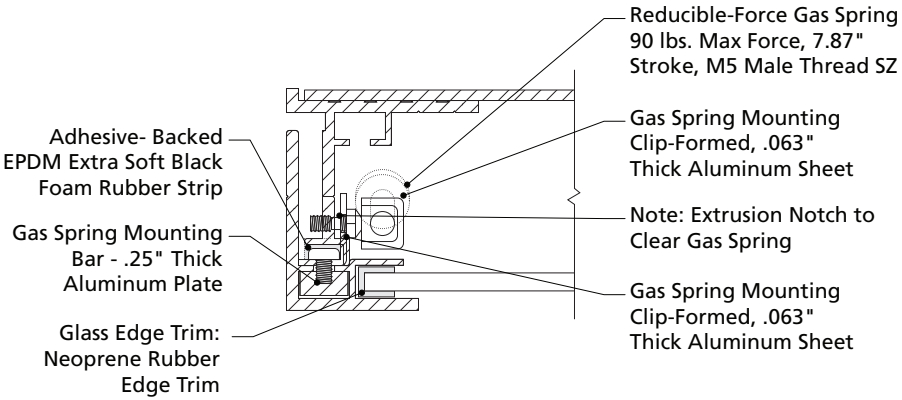

3-BC - 01 Bulletin Case Section

Scale: 1/2 Actual Size

BC - 01

Bulletin Case with Posts (BC)

Aluminum Fabrication (Continued)

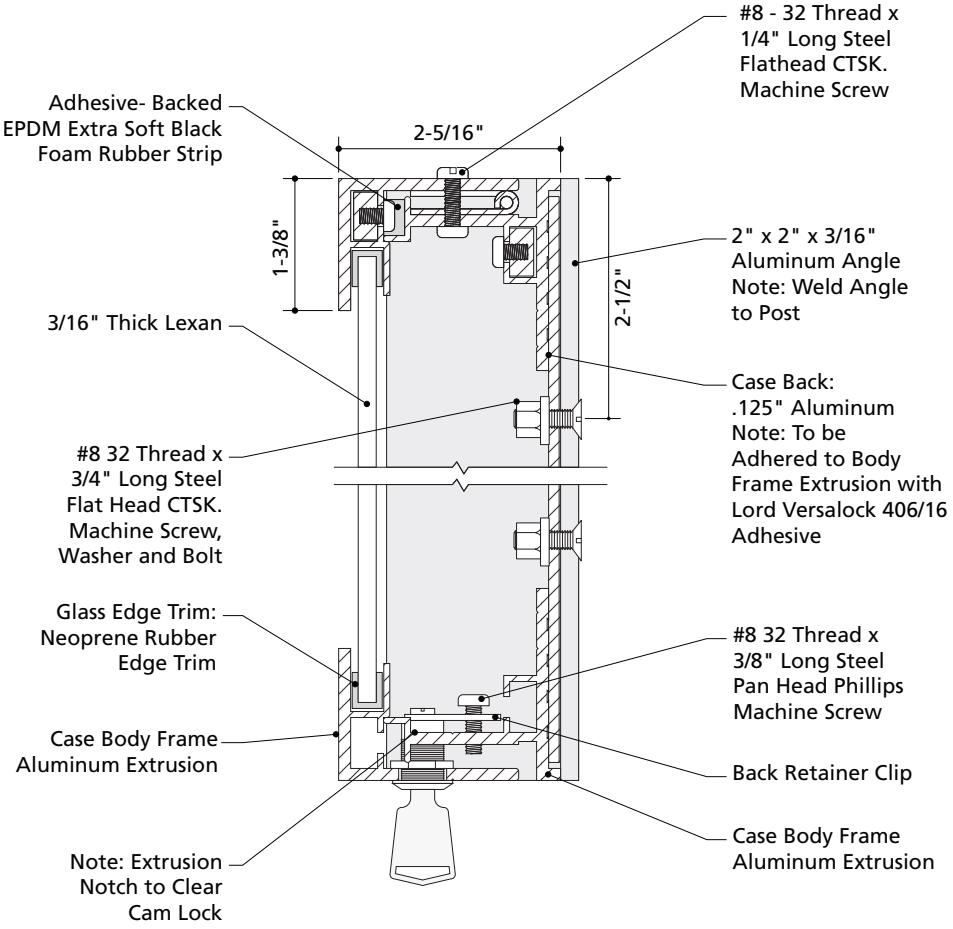

1-BC - 02 Bulletin Case Section

Scale: 1/2 Actual Size

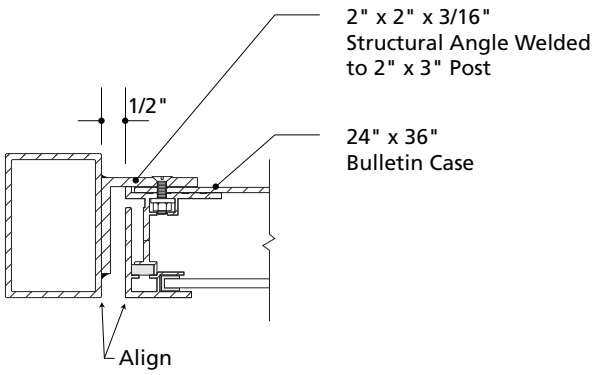

2-BC - 02 24" x 36" Bulletin Case, Plan View

Scale: 3" = 1'-0"

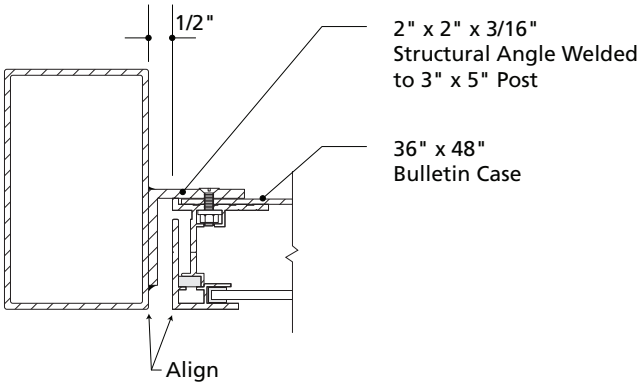

3-BC - 02 36" x 48" Bulletin Case, Plan View

Scale: 3" = 1'-0"

Bulletin Case Wall Mount (BC)

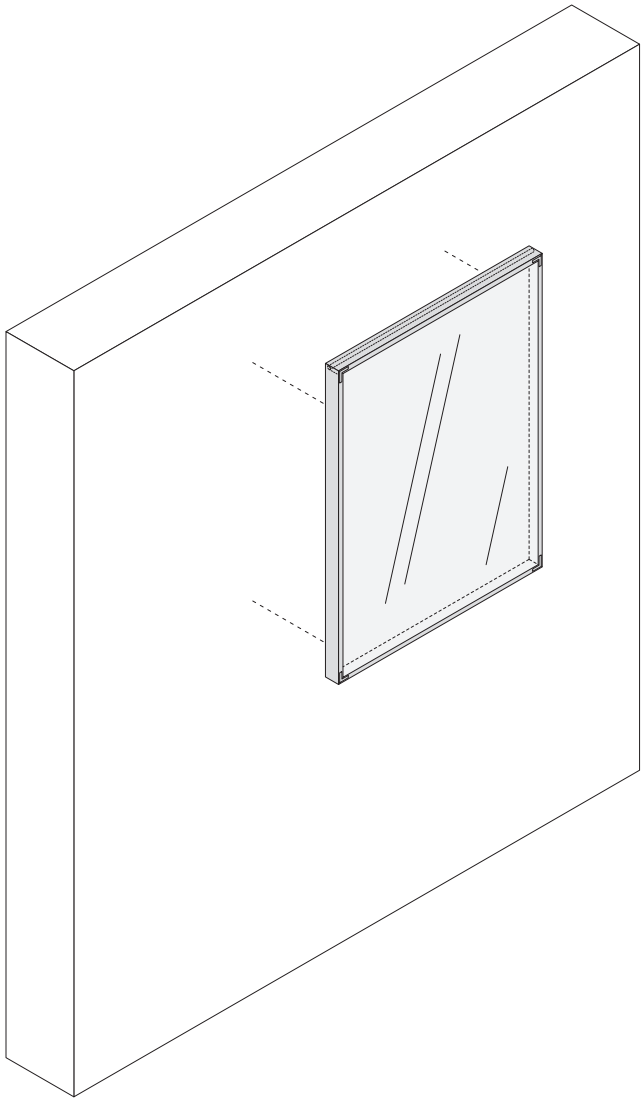

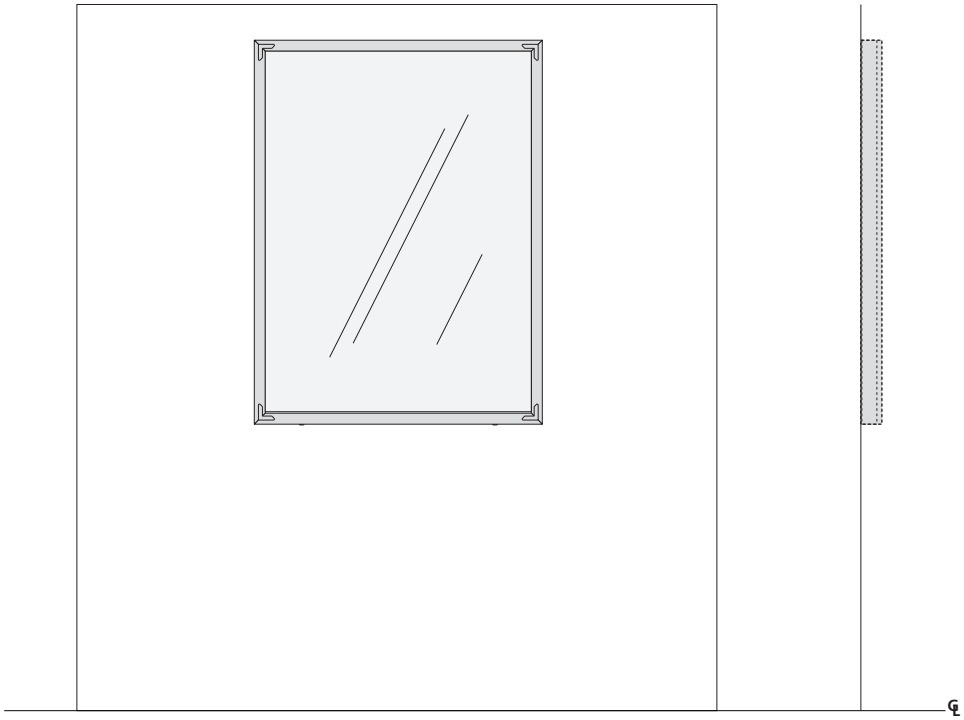

Bulletin Case Wall Mount (BC)

Aluminum Fabrication

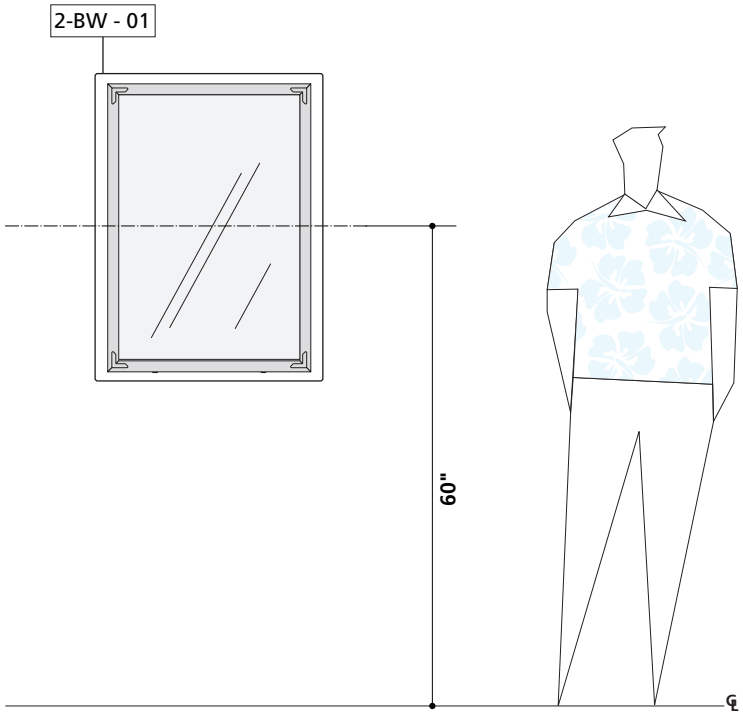

1-BW - 01 Bulletin Case Elevation

Scale: 1/2" = 1'-0"

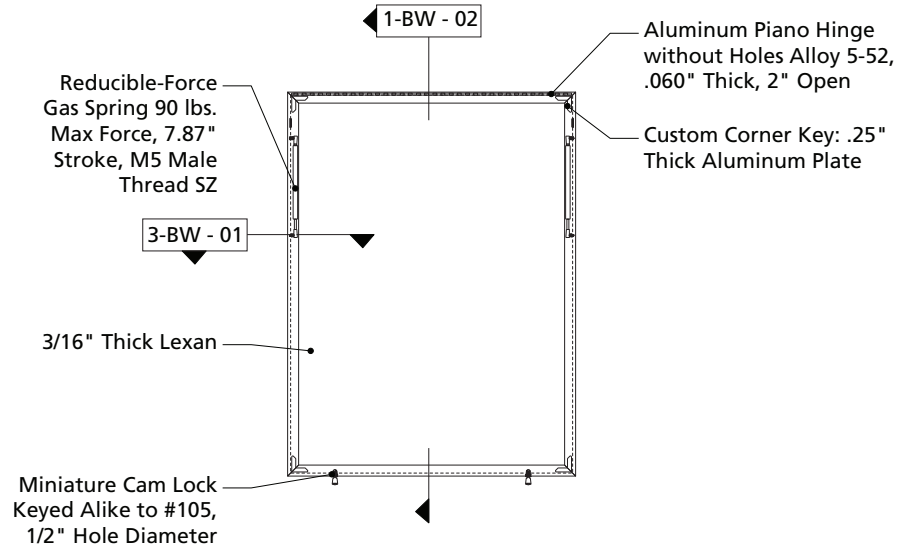

2-BW - 01 Bulletin Case Elevation

Scale: 1/2" = 1'-0"

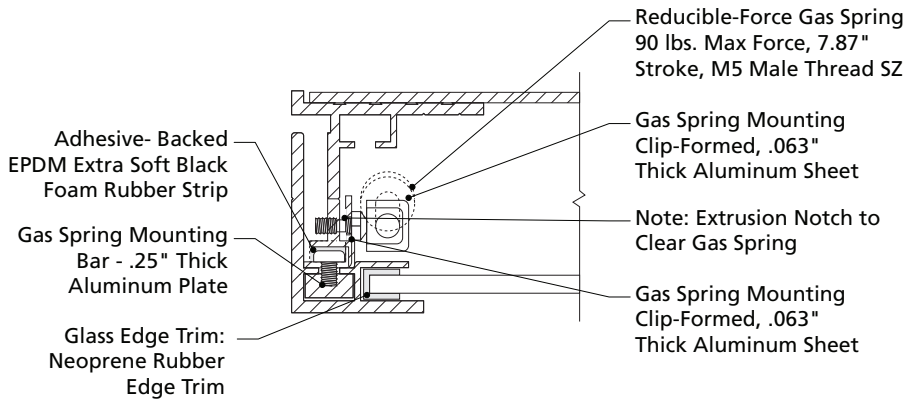

3-BW - 01 Bulletin Case Section

Scale: 1/2 Actual Size

BW - 01

Bulletin Case Wall Mount (BC)

Aluminum Fabrication (Continued)

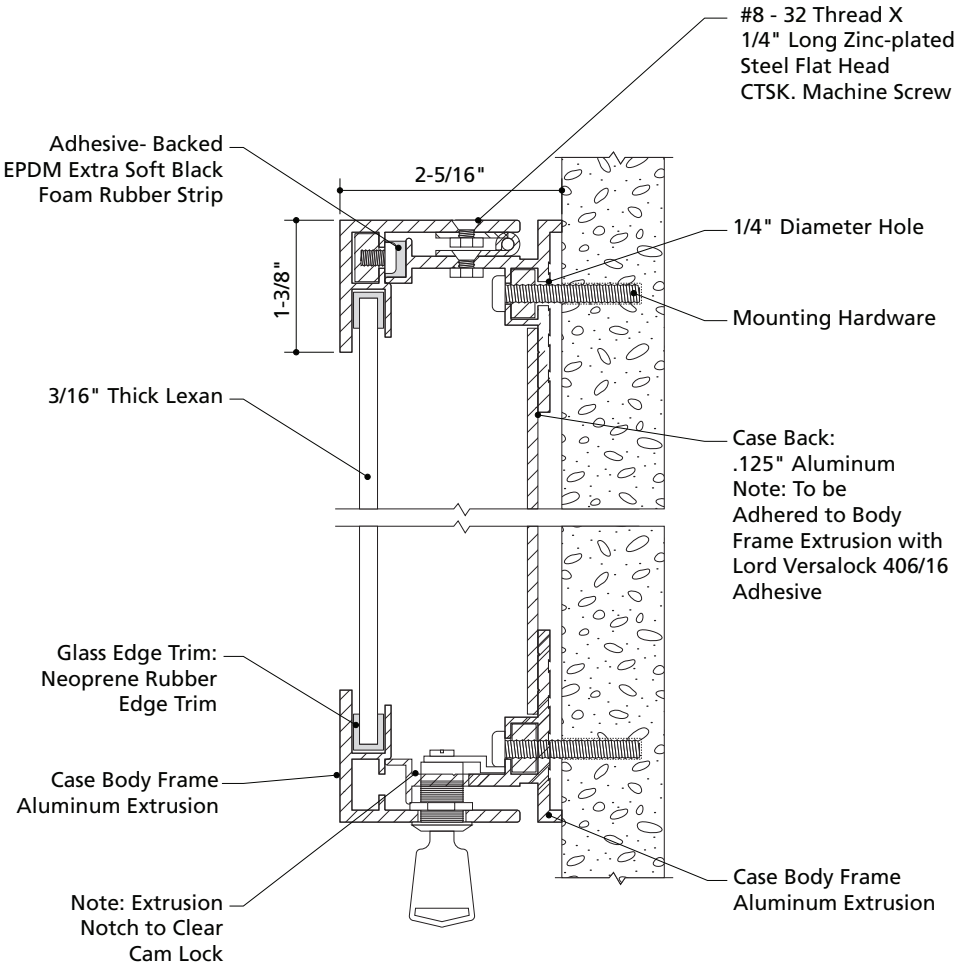

1-BW - 02 Bulletin Case Section

Scale: 1/2 Actual Size

Brochure Holder (BH)

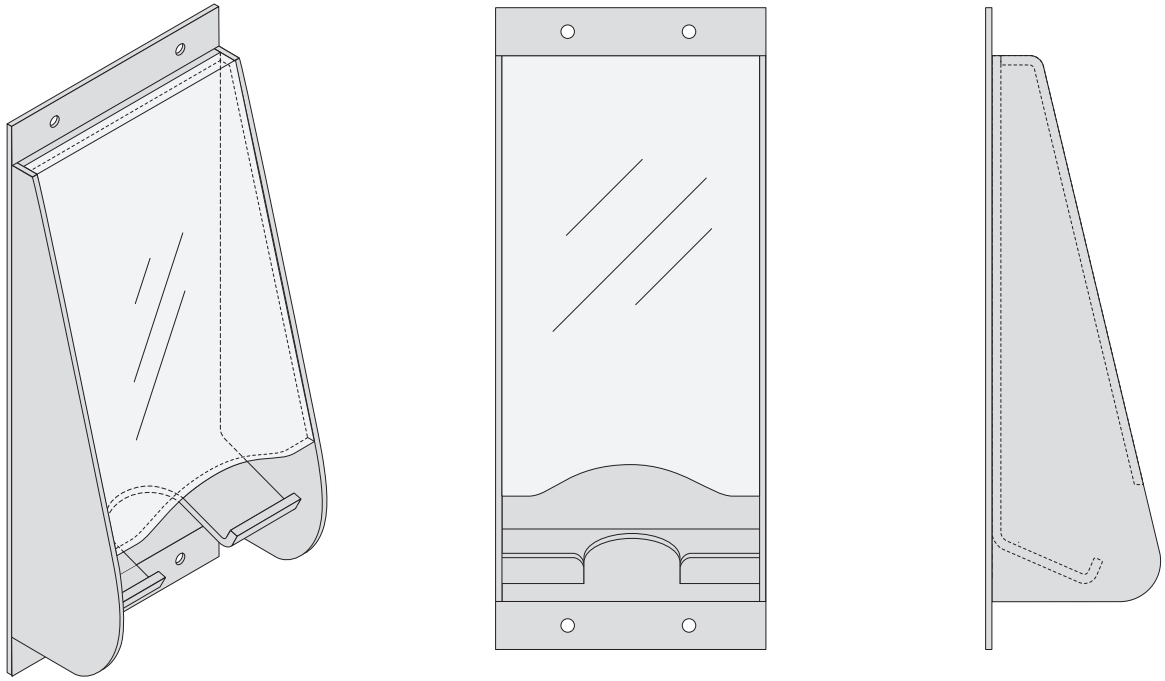

Brochure Holder (BH)

Fabrication Using Accessory Add-On Panel Mounting

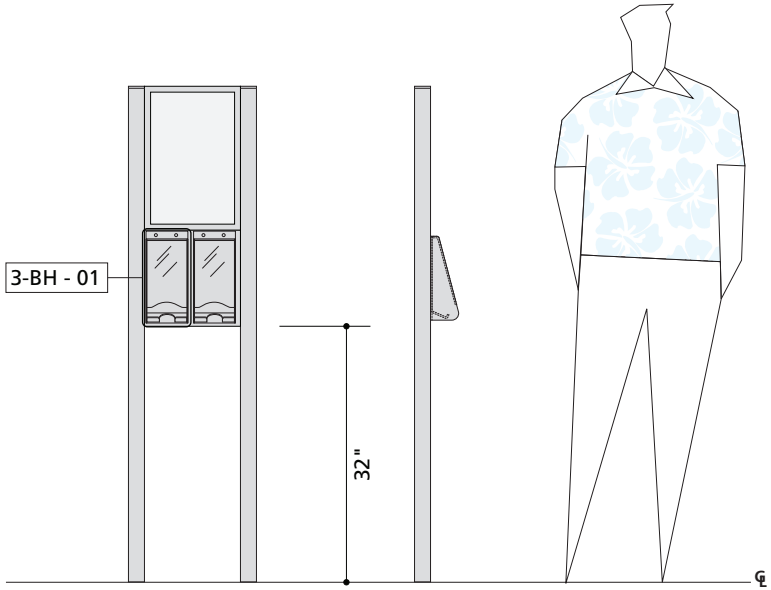

1-BH - 01 UP with Brochure Holder Elevation

Scale: 1/2" = 1'-0"

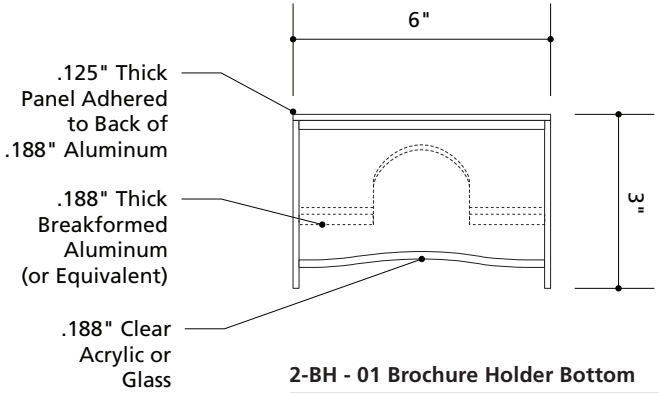

2-BH - 01 Brochure Holder Bottom

Scale: 3" = 1'-0"

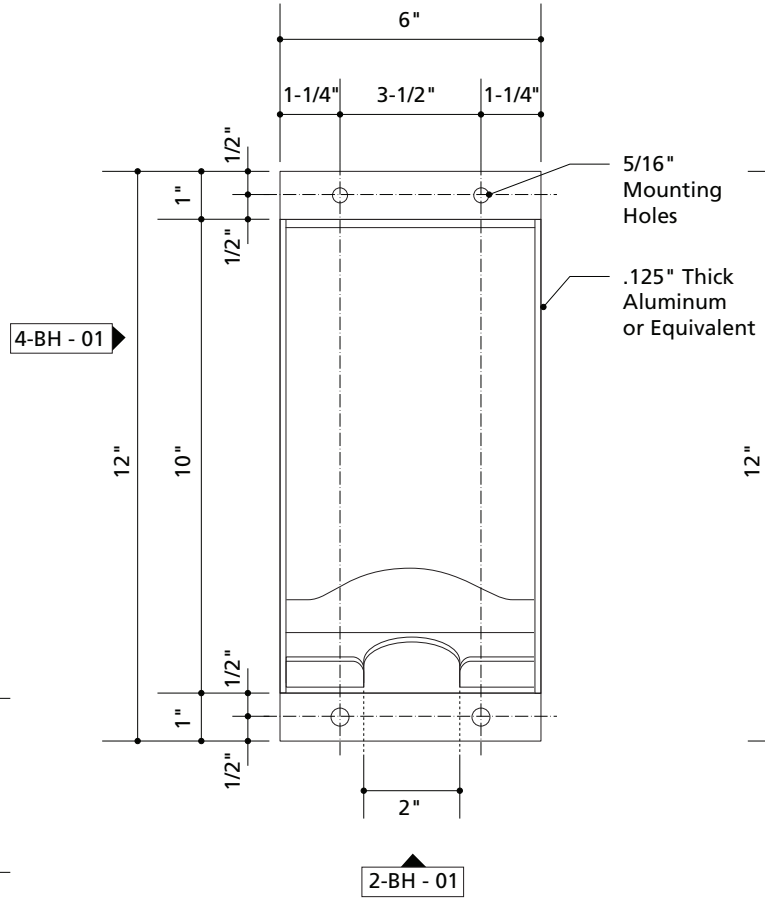

3-BH - 01 Front Elevation

Scale: 3" = 1'-0"

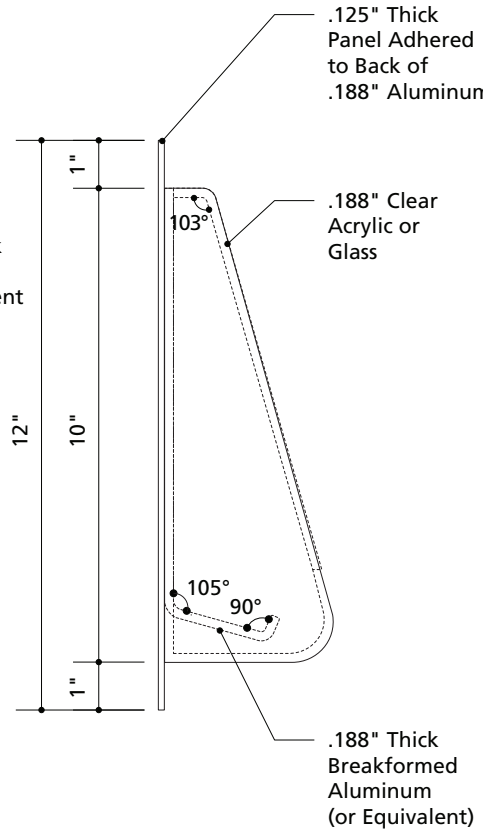

4-BH - 01 Side Elevation

Scale: 3" = 1'-0"

BH - 01

Miscellaneous Posting (MP)

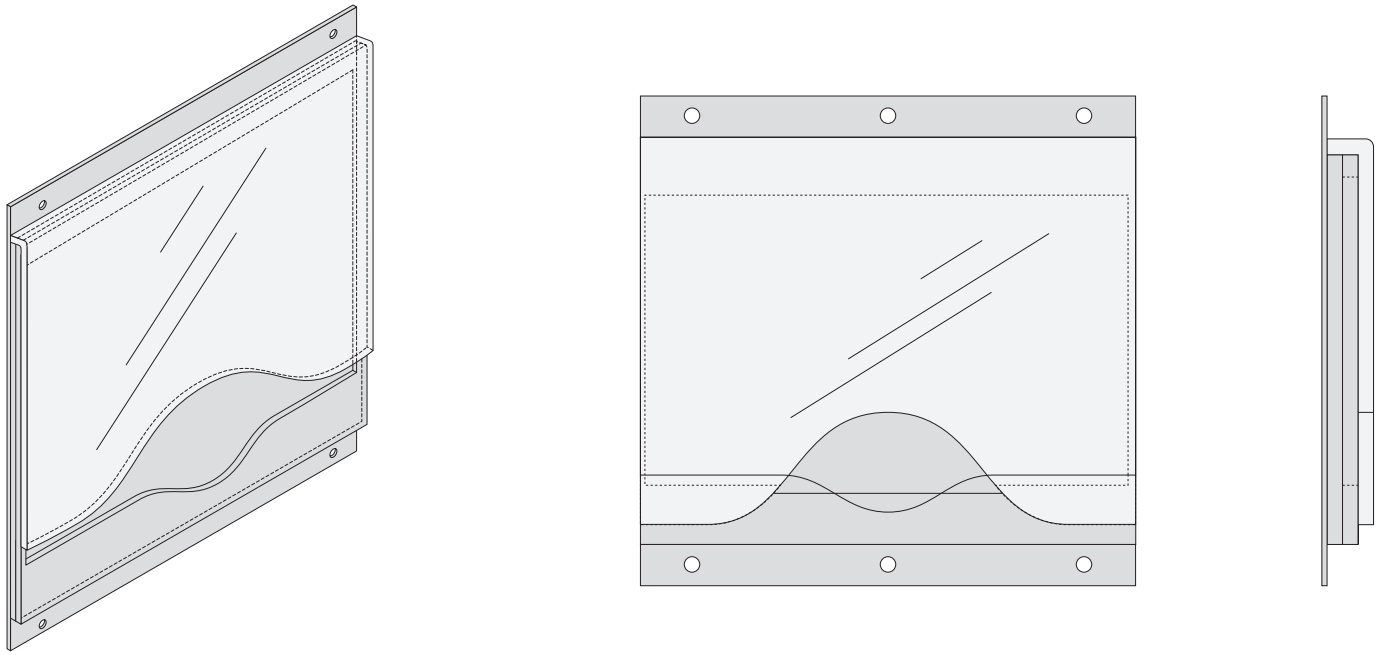

Miscellaneous Posting (MP)

Fabrication Using Accessory Add-On Panel Mounting

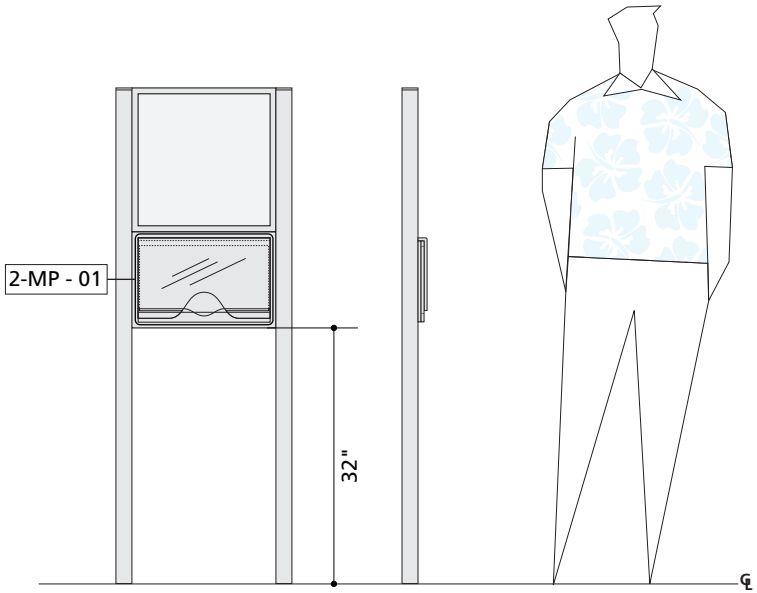

1-MP - 01 Upright with Miscellaneous Post Display

Scale: 1/2" = 1'-0"

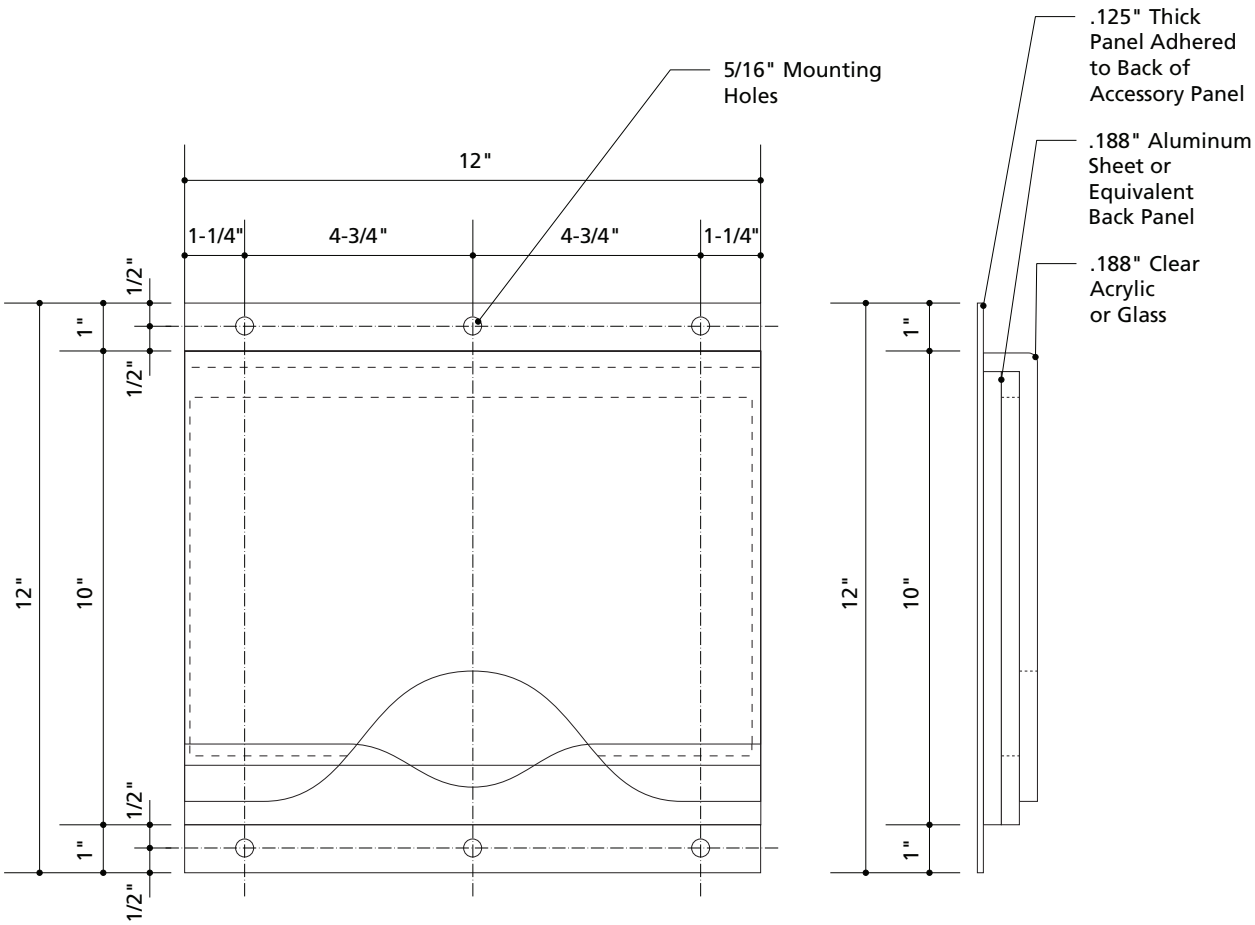

2-MP - 01 Front Elevation

Scale: 3" = 1'-0"

3-MP - 01 Side Elevation

Scale: 3" = 1'-0"

MP - 01

Accessory Add-On Panel

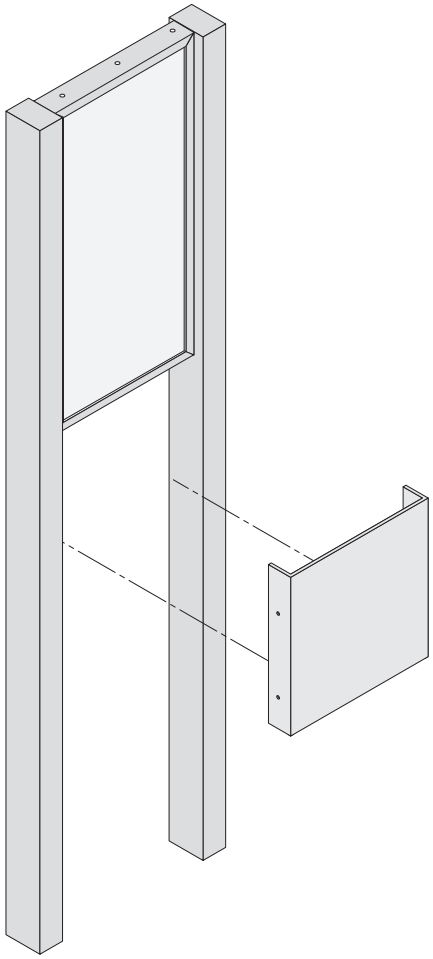

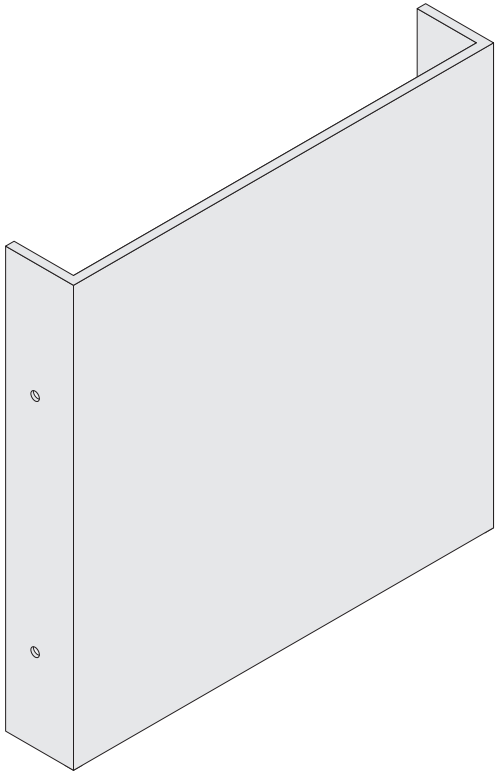

Accessory Add-On Panel

Aluminum and Steel Fabrication

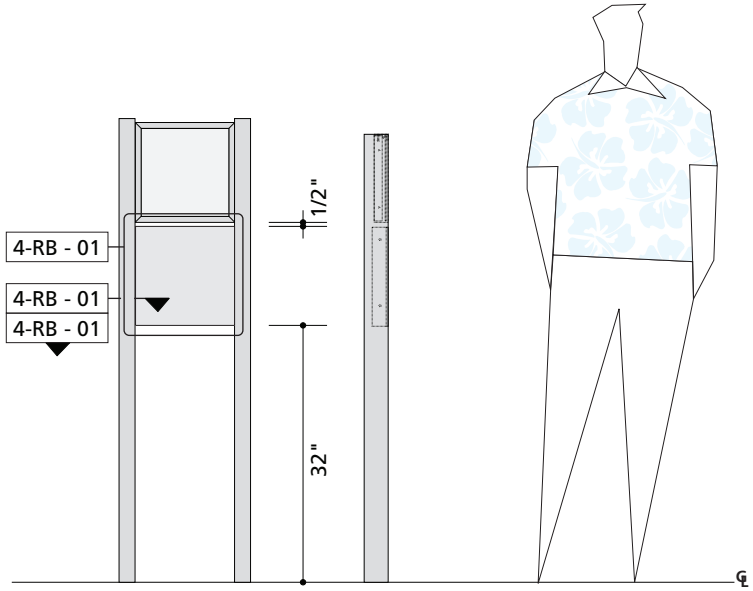

1-MP - 01 Upright with Accessory Add On Panel Elevation

Scale: 1/2" = 1'-0"

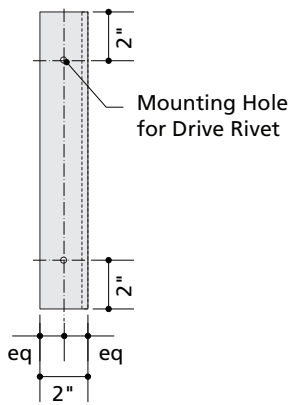

3-MP - 01 Side Elevation (2" x 2" Post)

Scale: 1-1/2" = 1'-0"

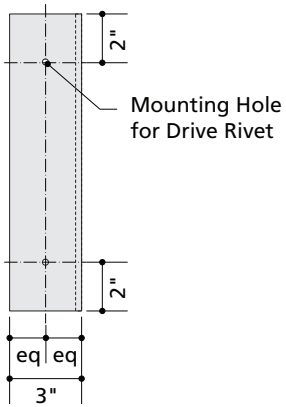

4-MP - 01 Side Elevation (2" x 3" Post)

Scale: 1-1/2" = 1'-0"

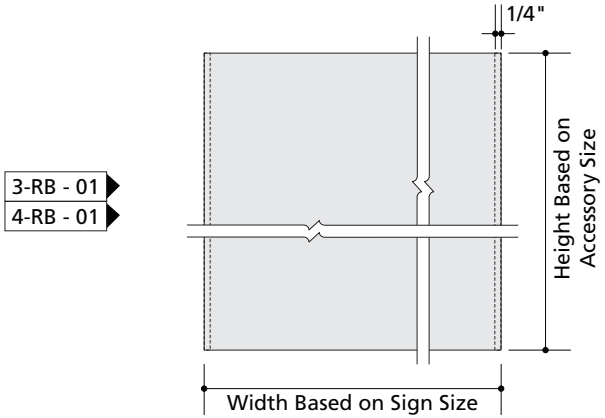

2-MP - 01 Front Elevation

Scale: 1-1/2" = 1'-0"

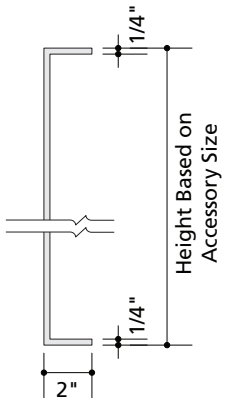

5-MP - 01 Plan View (2" x 2" Post)

Scale: 1-1/2" = 1'-0"

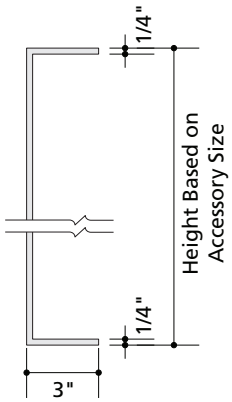

6-MP - 01 Plan View (2" x 3" Post)

Scale: 1-1/2" = 1'-0"

MP - 01

Accessory Add-On Panel

Aluminum and Steel Fabrication (Continued)

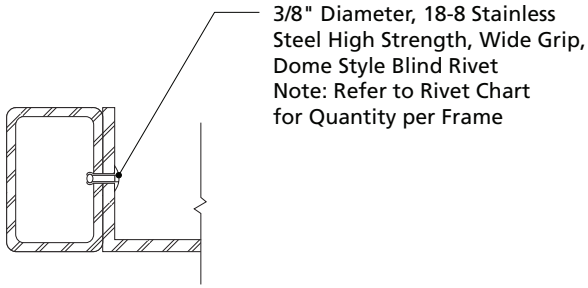

1-MP - 01 2" x 2" Steel Post Connection

Scale: 3" = 1'-0"

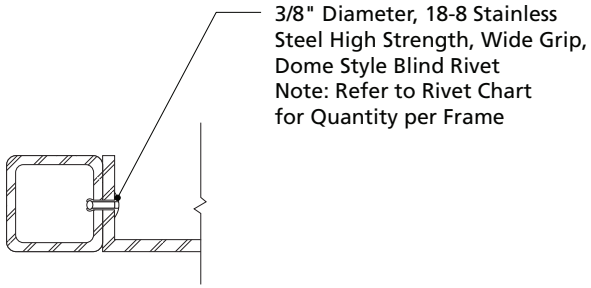

2-MP - 01 2" x 3" Steel Post Connection

Scale: 3" = 1'-0"

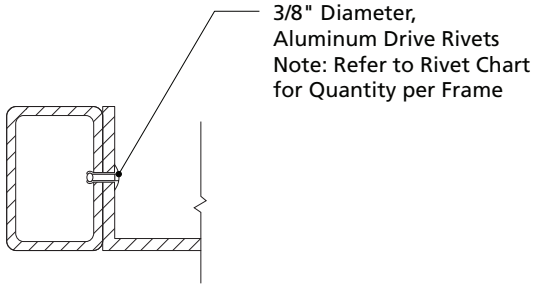

3-MP - 01 2" x 2" Aluminum Post Connection

Scale: 3" = 1'-0"

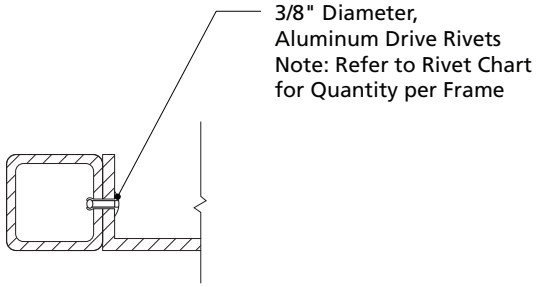

4-MP - 01 2" x 3" Aluminum Post Connection

Scale: 3" = 1'-0"

Installation Options

Direct Embedment (DE)

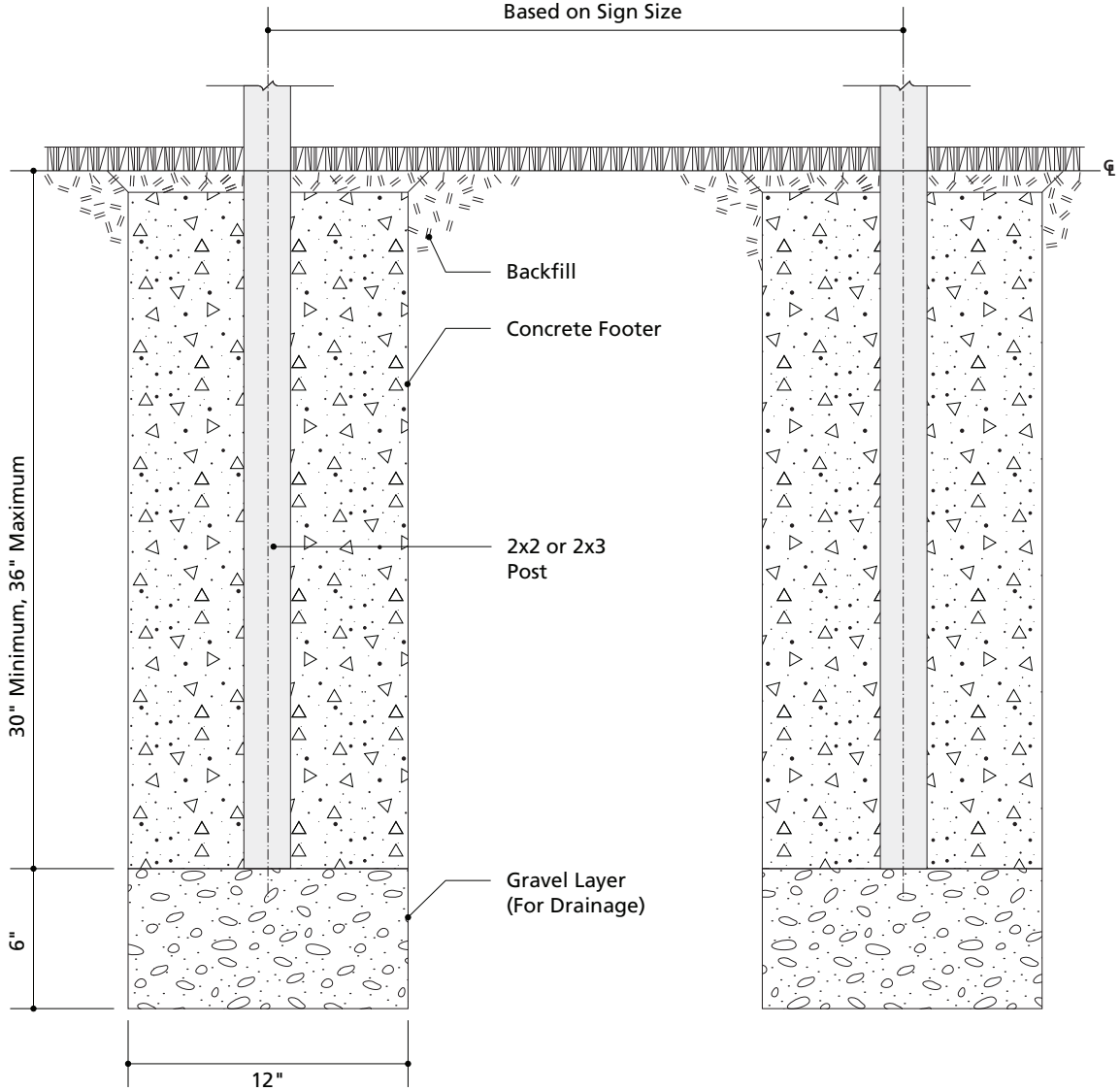

1-IO - 01 Direct Embedment

Scale: 1-1/2" = 1'-0"

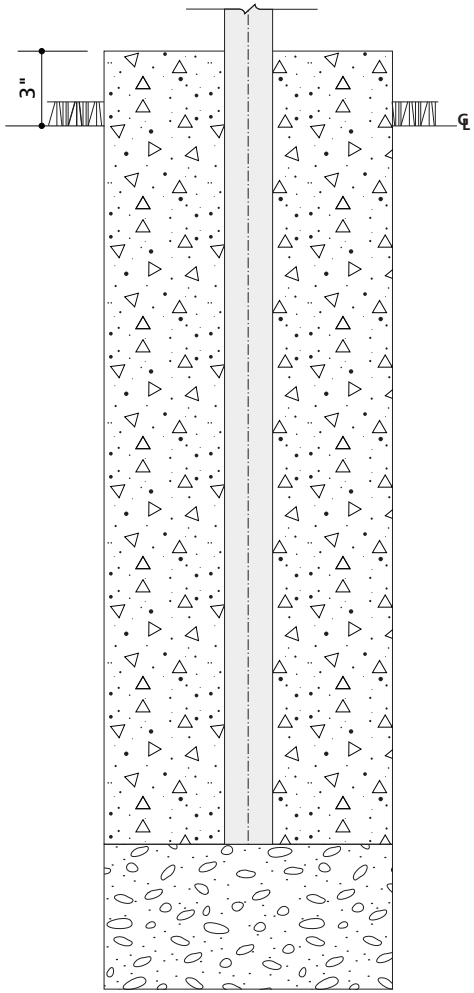

2-IO - 01 Direct Embedment with Mow Ring

Scale: 1-1/2" = 1'-0"

IO - 01

Direct Embedment with Socket Mount (SM)

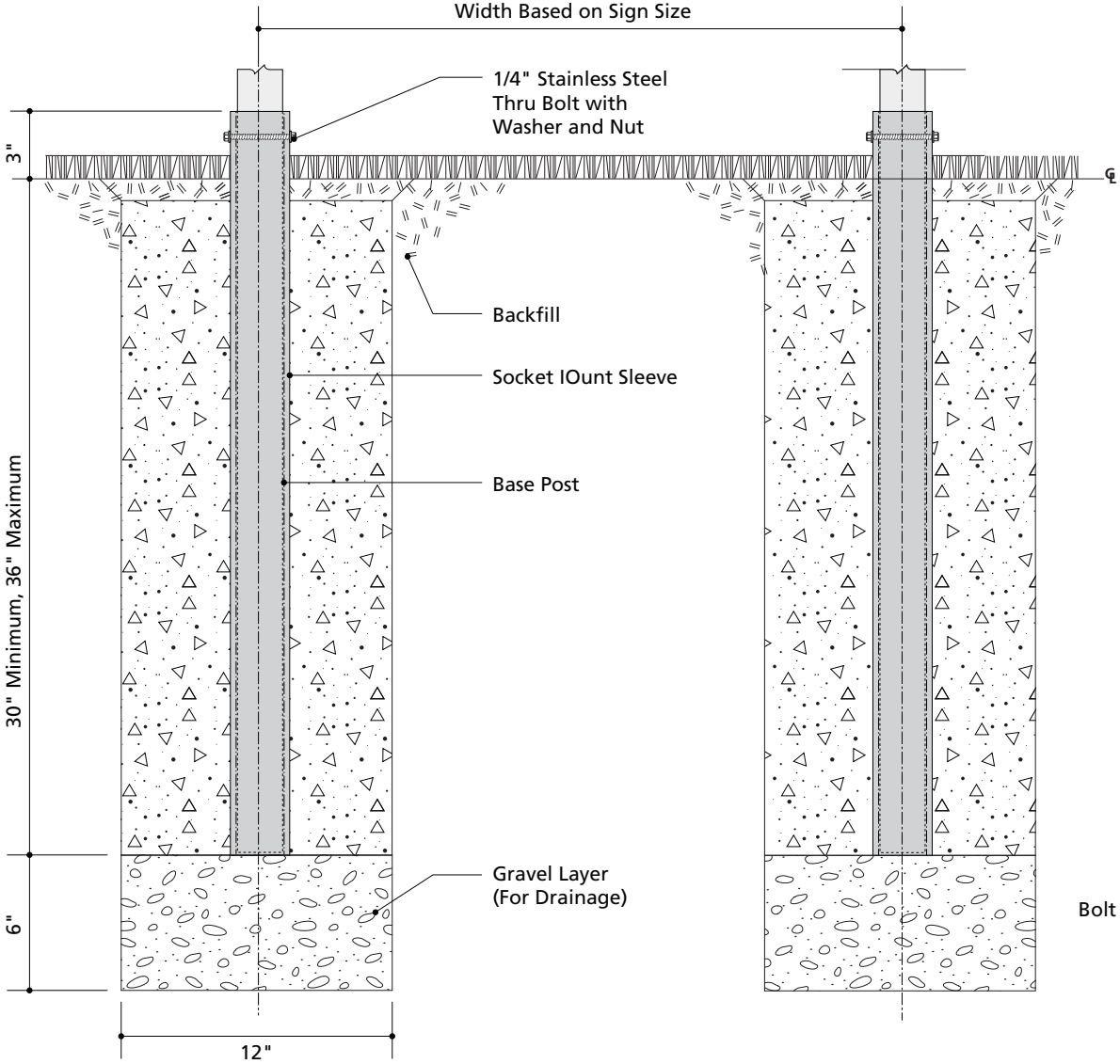

1-IO - 02 Direct Embedment with Socket Mount

Scale: 1-1/2" = 1'-0"

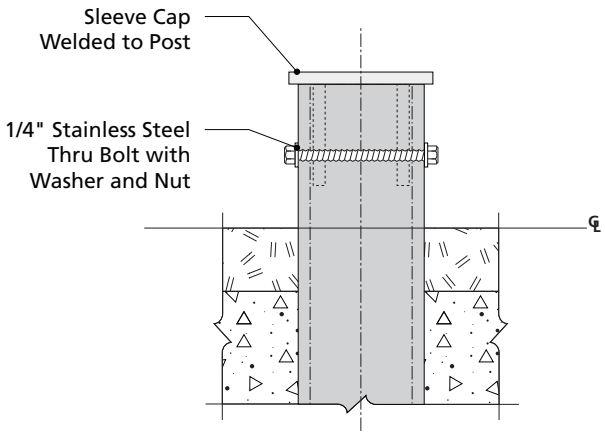

2-IO - 01 Socket Cap Detail

Scale: 3" = 1'-0"

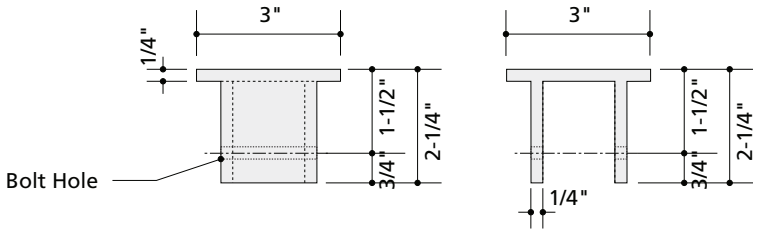

2-IO - 01 Socket Cap Front and Side Elevations

Scale: 3" = 1'-0"

IO - 02

Upright Series Baseplate Mount (BP): Landscape

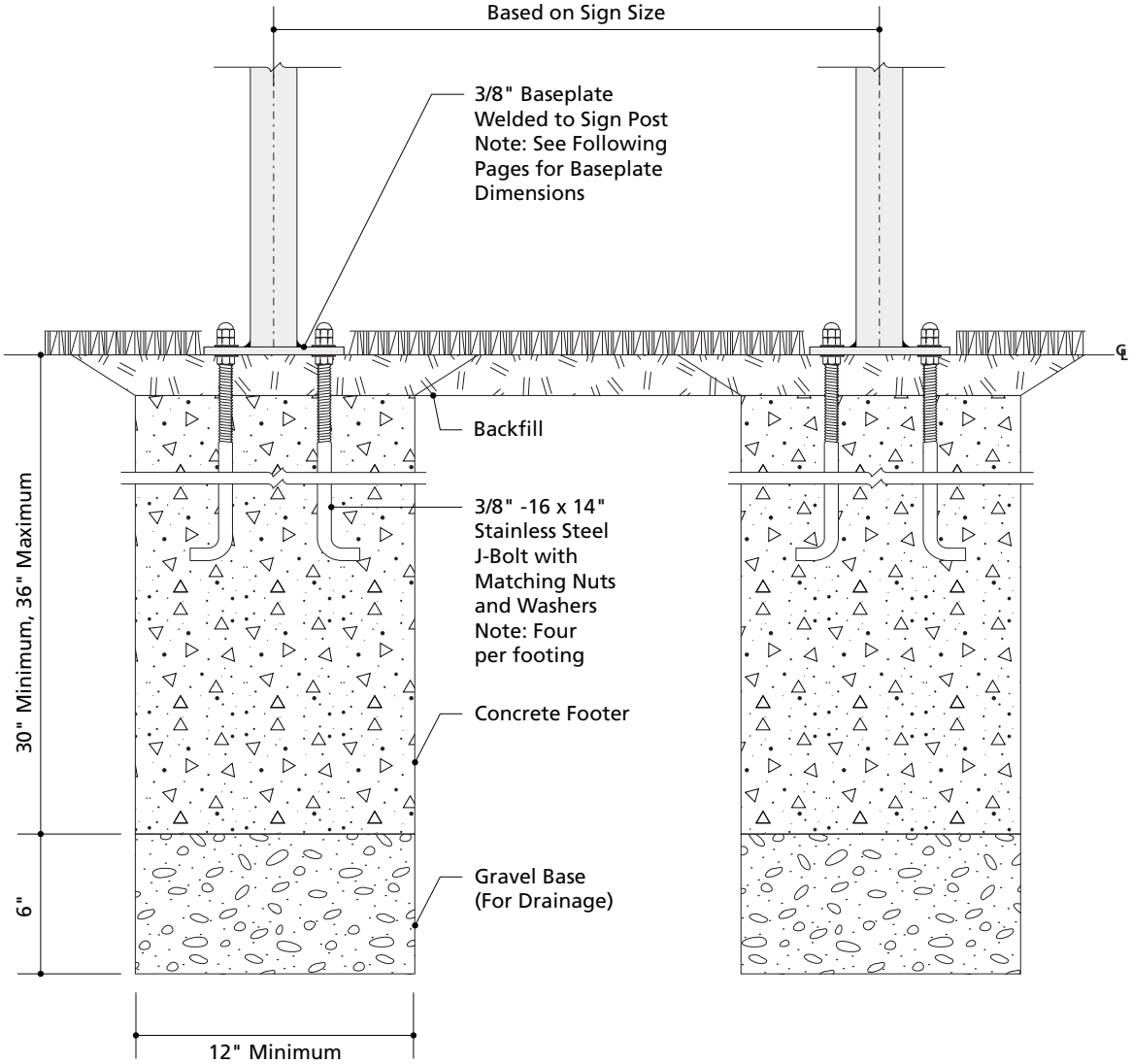

1-IO - 03 Baseplate Mount: Landscape, Elevation

Scale: 1-1/2" = 1'-0"

IO - 03

Upright Series Baseplate Mount (BP): Hard Surface

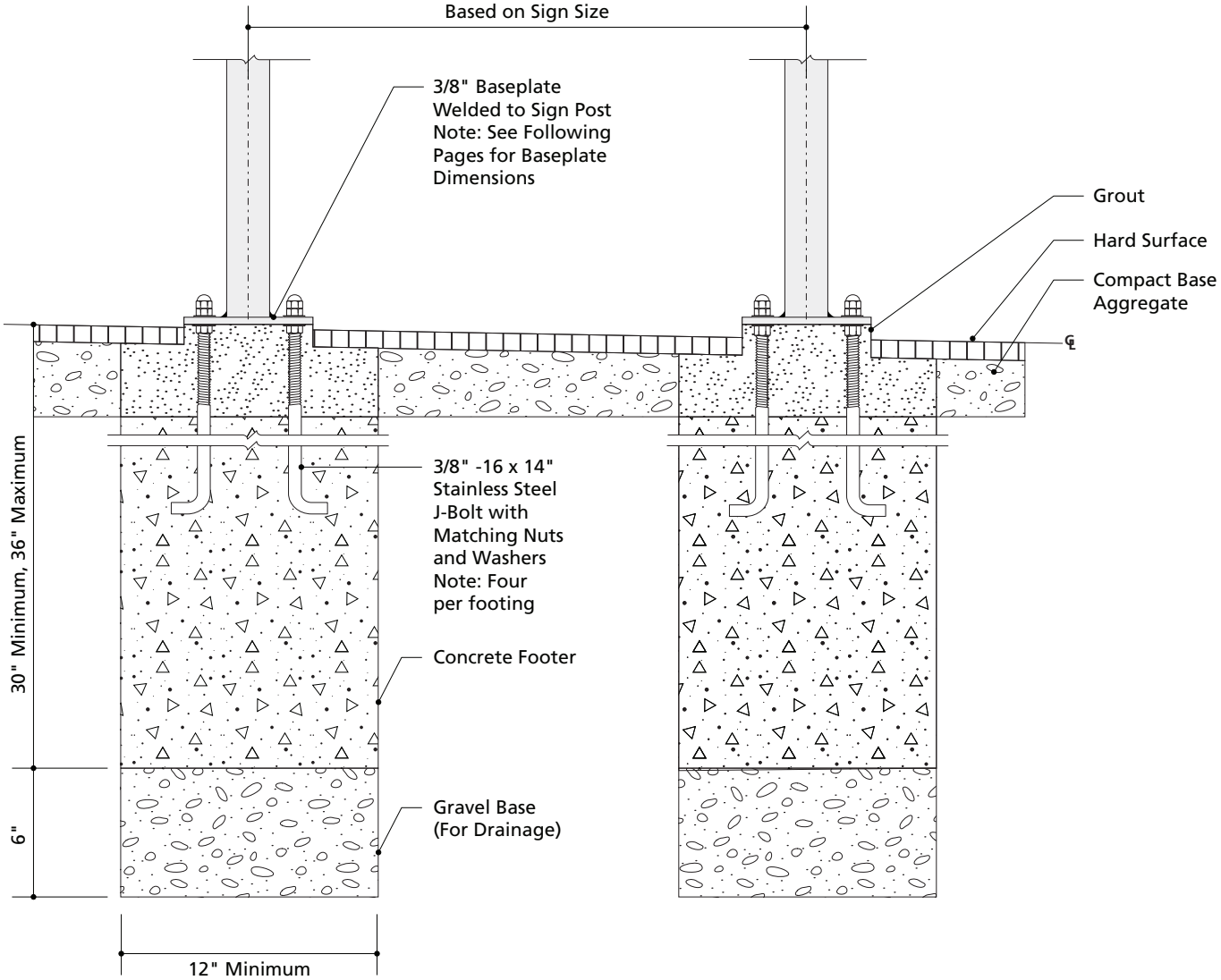

1-IO - 04 Baseplate Mount: Hard Surface, Elevation

Scale: 1-1/2" = 1'-0"

IO - 04

Baseplates

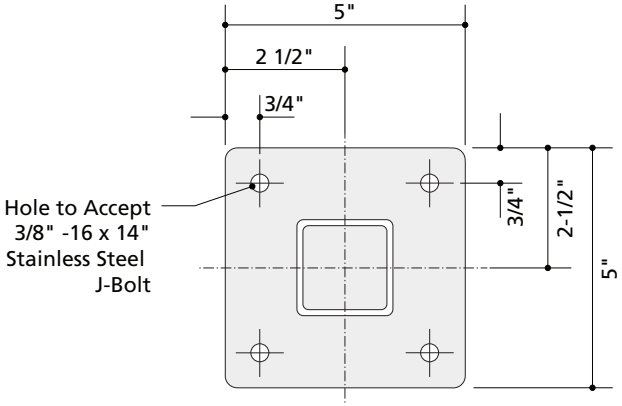

1-IO - 05 Baseplate Plan View, 2" x 2" Post
Scale: 3" = 1'-0"

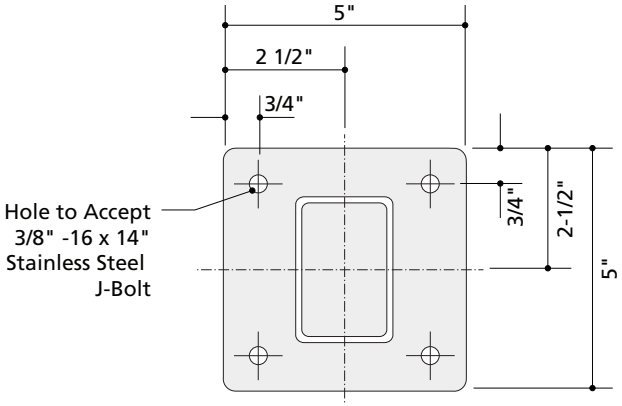

2-IO - 05 Baseplate Plan View, 2" x 3" Post
Scale: 3" = 1'-0"

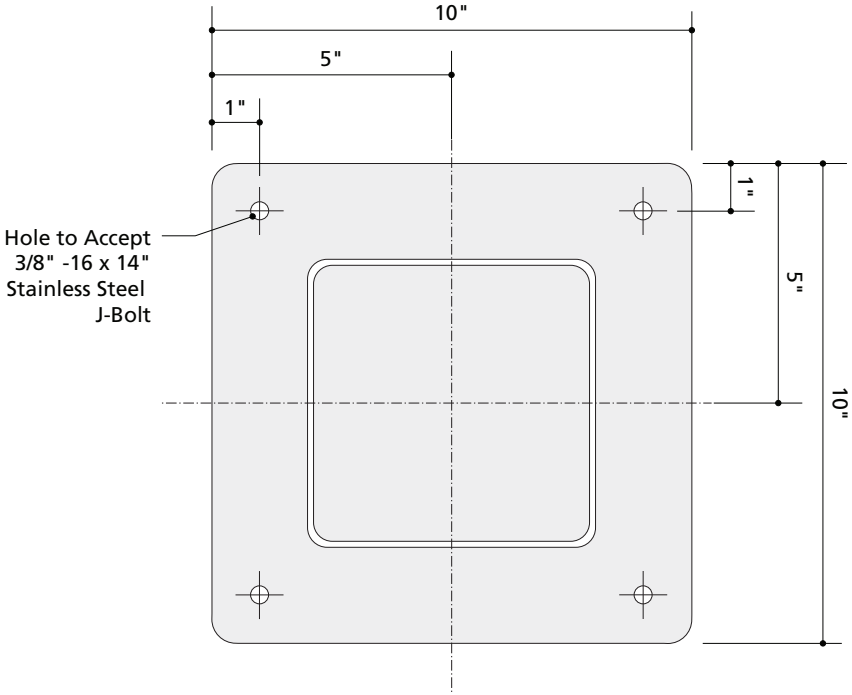

3-IO - 05 Baseplate Plan View, 6" x 6" Post
Scale: 3" = 1'-0"

IO - 05

Baseplates

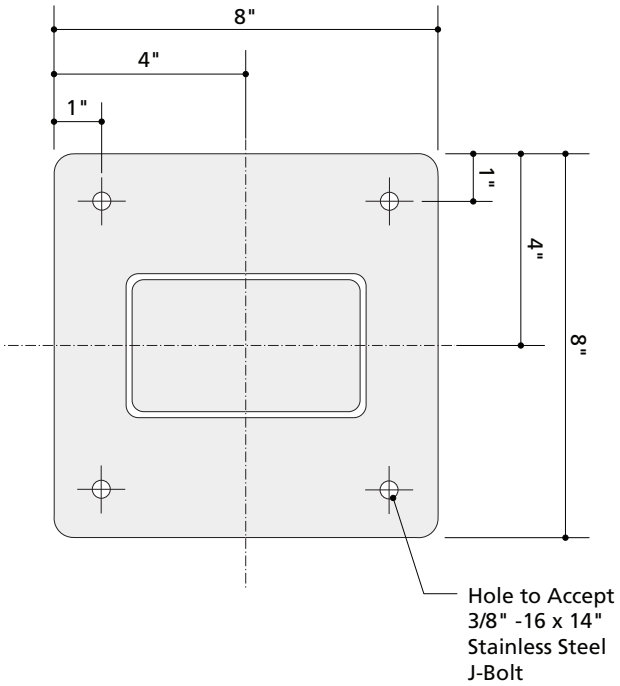

1-IO - 06 Baseplate Plan View, 3" x 5" Post
Scale: 3" = 1'-0"

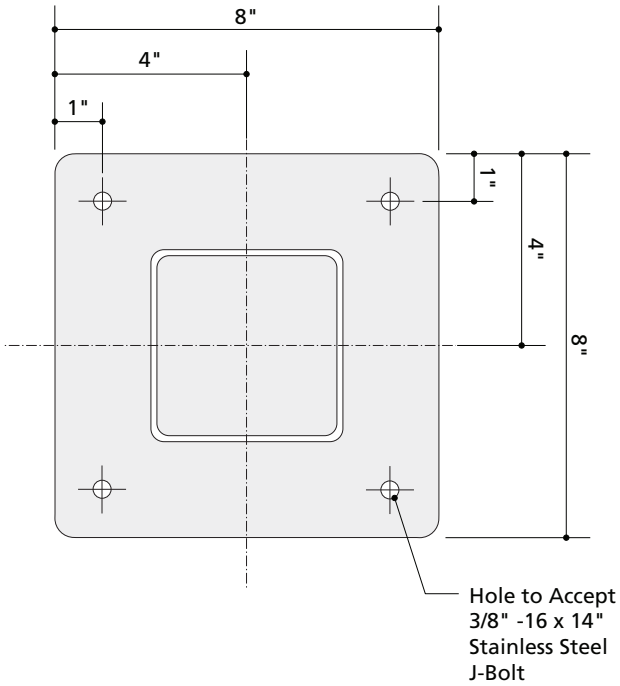

2-IO - 06 Baseplate Plan View, 4" x 4"
Scale: 3" = 1'-0"

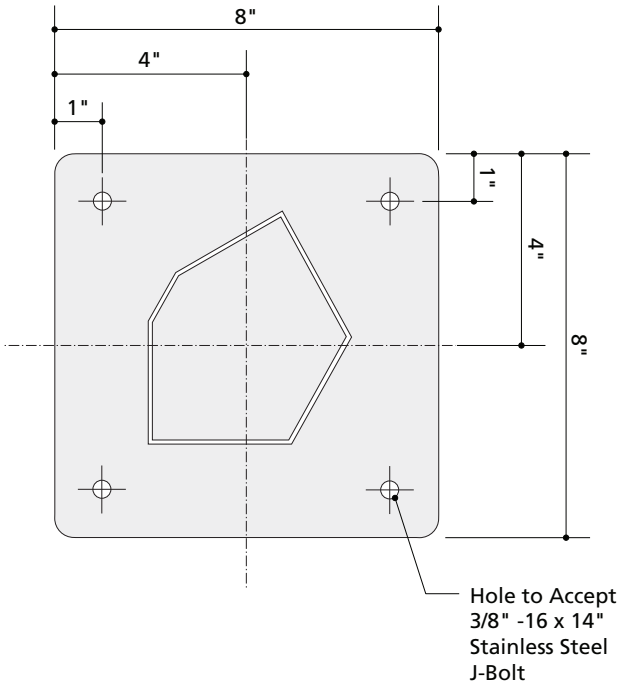

3-IO - 06 Baseplate Plan View, UP Tri Post
Scale: 3" = 1'-0"

Deck Mount (DM)

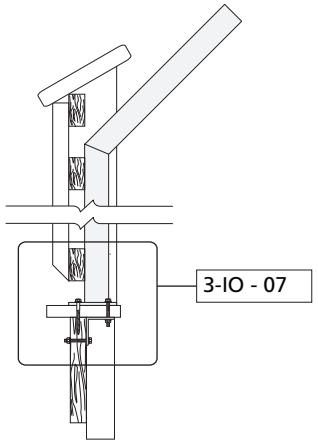

1-IO - 07 Deck Mount Inside of Post, Side Elevation

Scale: 1/2" = 1'-0"

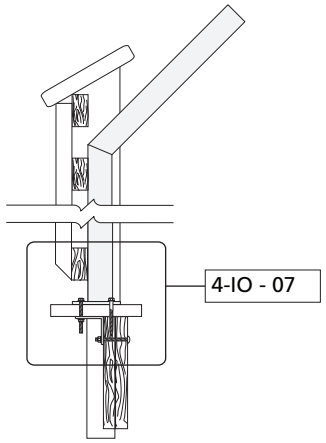

2-IO - 07 Deck Mount Outside of Post, Side Elevation

Scale: 1/2" = 1'-0"

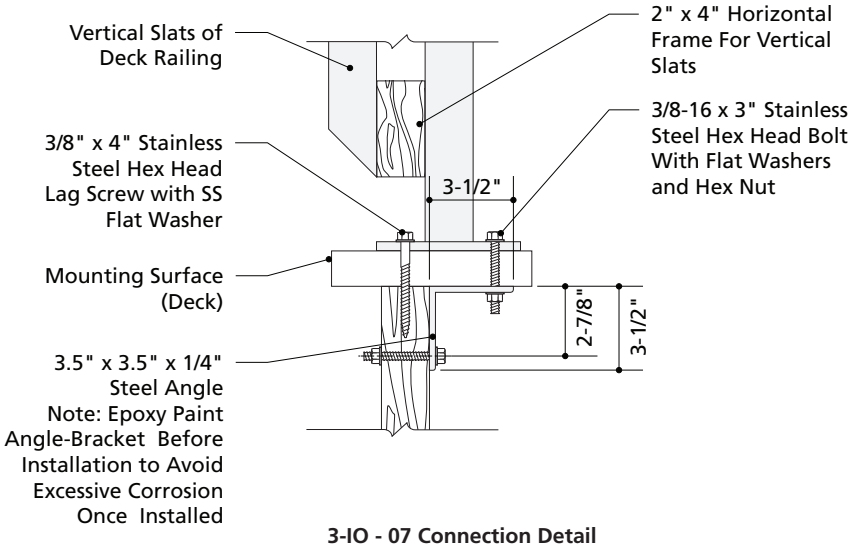

3-IO - 07 Connection Detail

Scale: 1-1/2" = 1'-0"

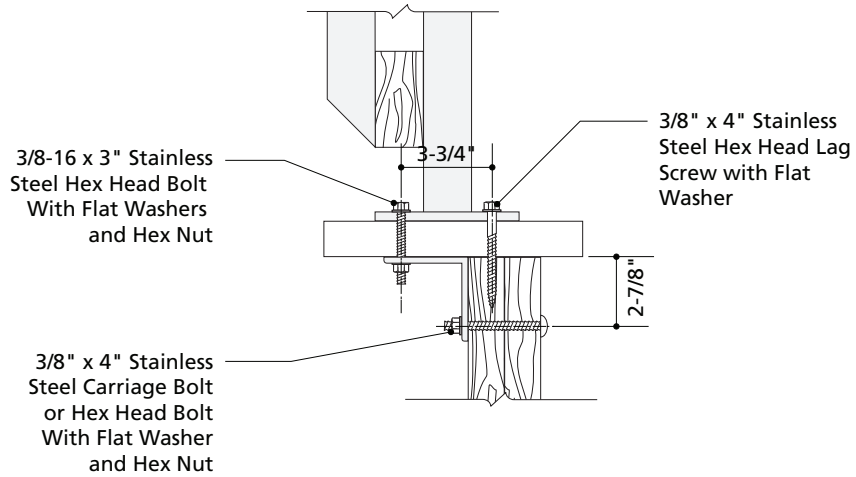

4-IO - 07 Connection Detail

Scale: 1-1/2" = 1'-0"

Direct Embed with Stabilizer Bars (SB)

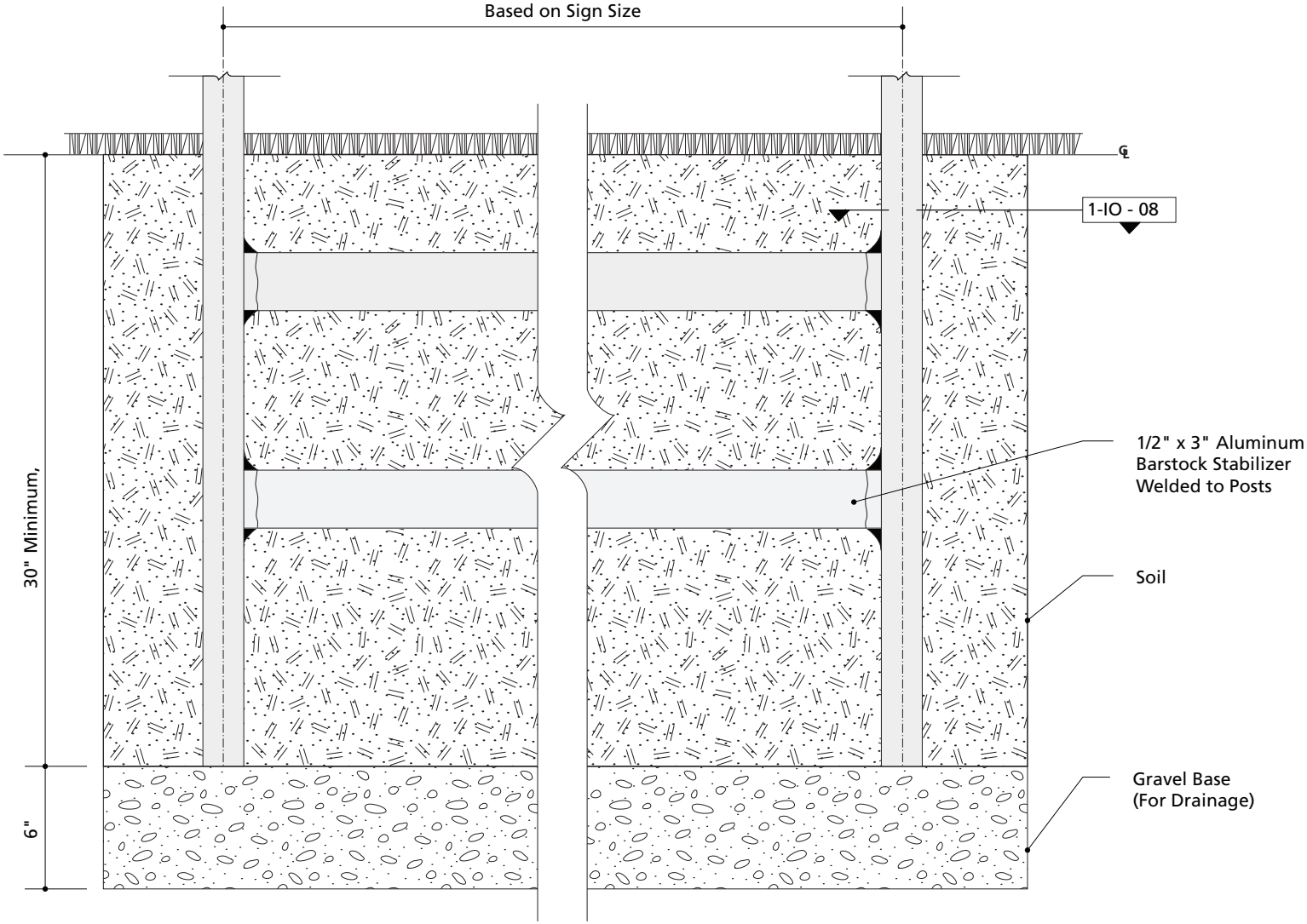

1-IO - 08 Direct Embed with Stabilizer Bars

Scale: 1-1/2" = 1'-0"

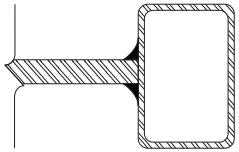

1-IO - 08 Post Section Cut

Scale: 3" = 1'-0"

IO - 08

Direct Embed with Stabilizer Fins (SF)

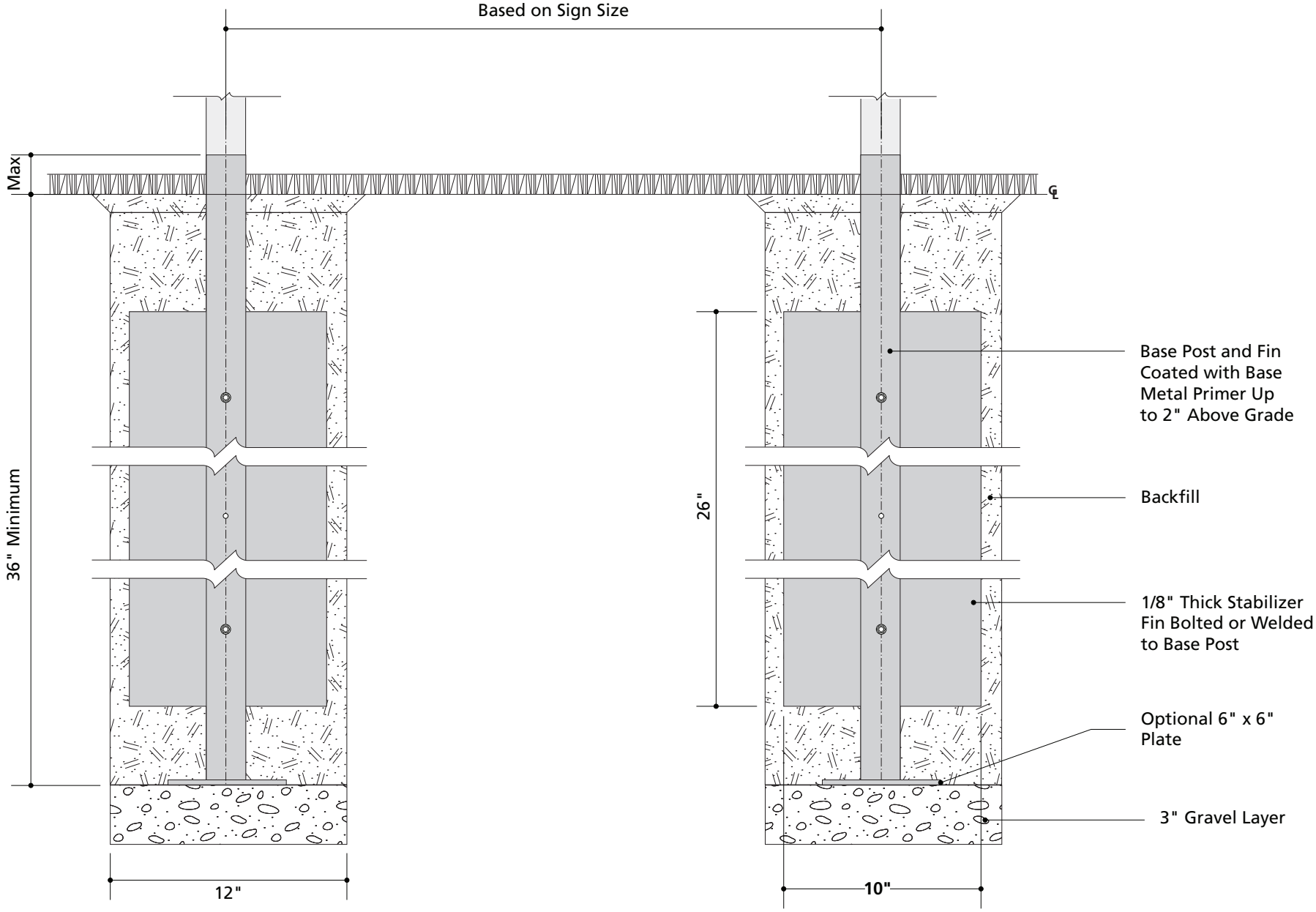

IO - 09

Low Profile Series Wall Cap Mount (CM)

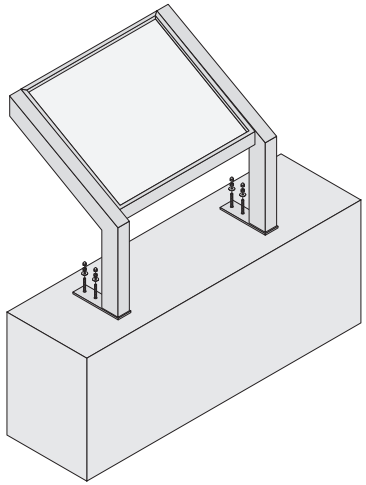

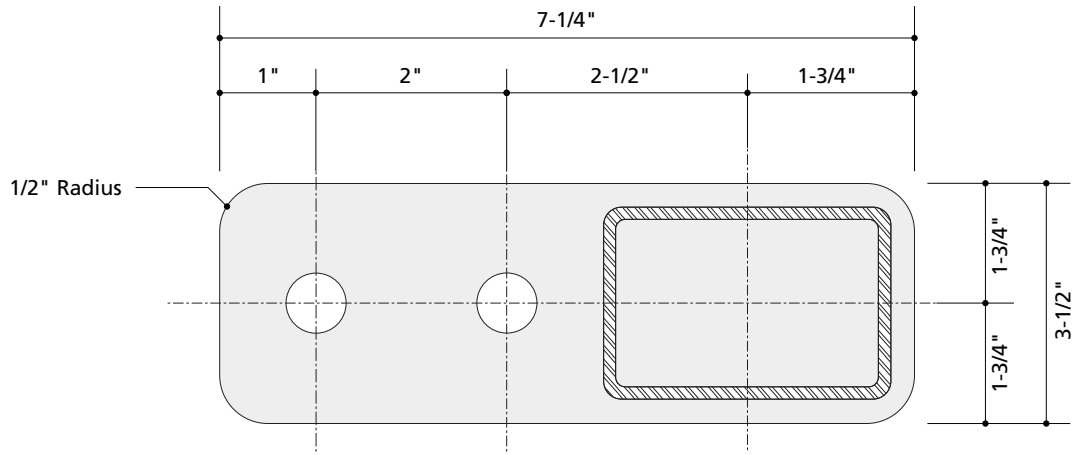

2-IO - 10 Baseplate Plan View

Scale: 1/2 Actual Size

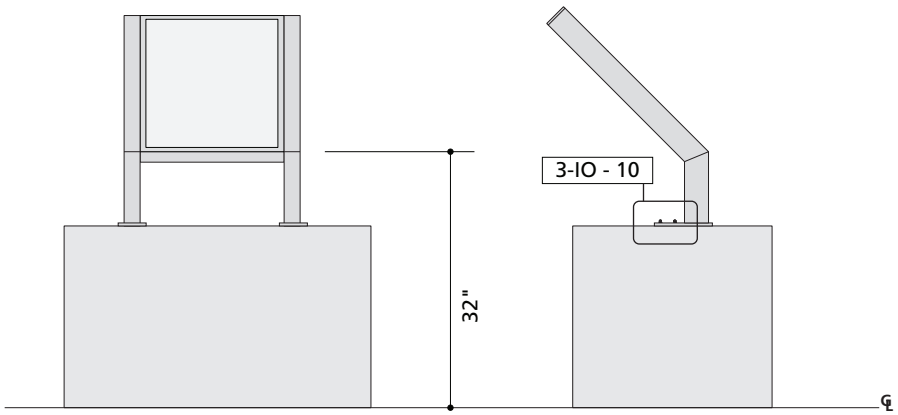

1-IO - 10 Low Profile Wall Cap Mount Elevationz

Scale: 1/2" = 1'-0"

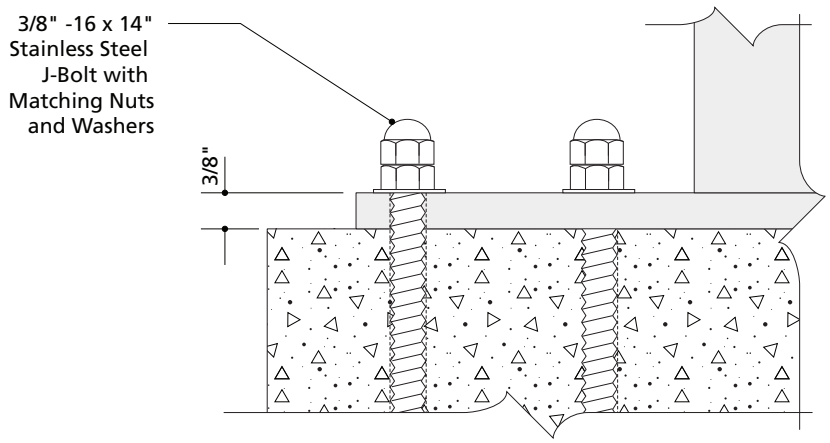

3-IO - 10 Mounting Detail

Scale: 1/2 Actual Size

IO - 10

Low Profile Series Sled Base (SB)

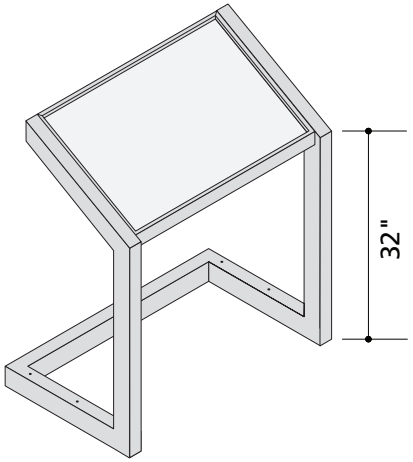

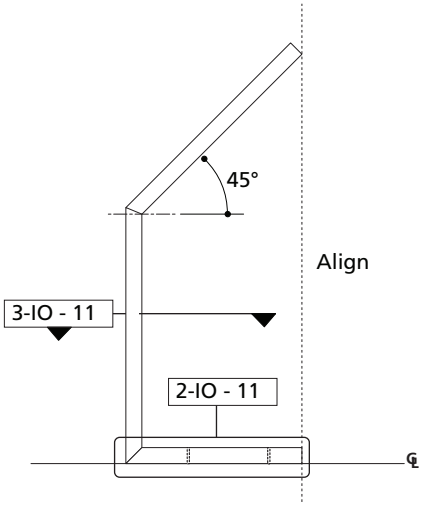

1-IO - 11 Low Profile Sled Base Side Elevation

Scale: 1/2" = 1' 0"

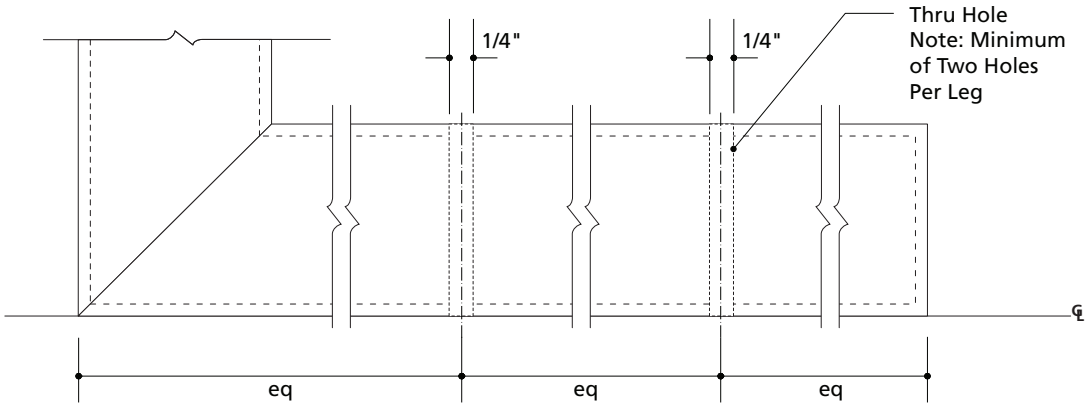

2-IO -10 Mounting Hole Detail

Scale: 1/2 Actual Size

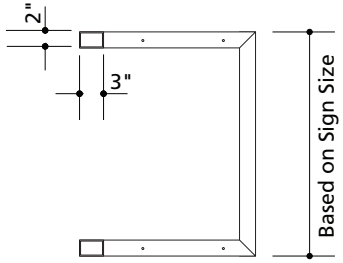

3-IO - 11 Top Section

Scale: 1/2" = 1' 0"

IO - 11

Strap Kit (SK)

Aluminum and Steel Fabrication

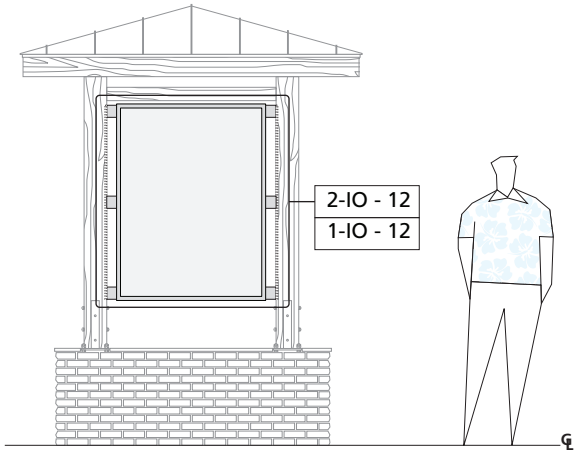

1-IO - 12 Wood Kiosk with Strap Kit Elevation

Scale: 1/2"=1'-0"

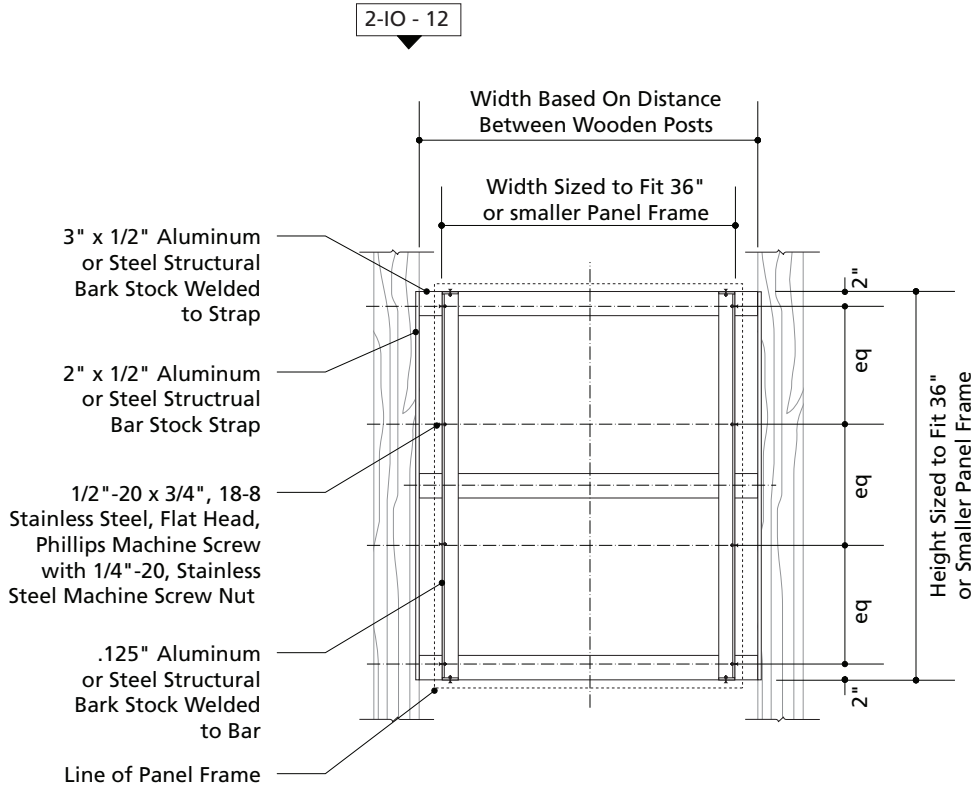

2-IO - 12 Strap Elevation (36" or Smaller Panels)

Scale: 1/2"=1'-0"

Strap Kit

Aluminum and Steel Fabrication Continued

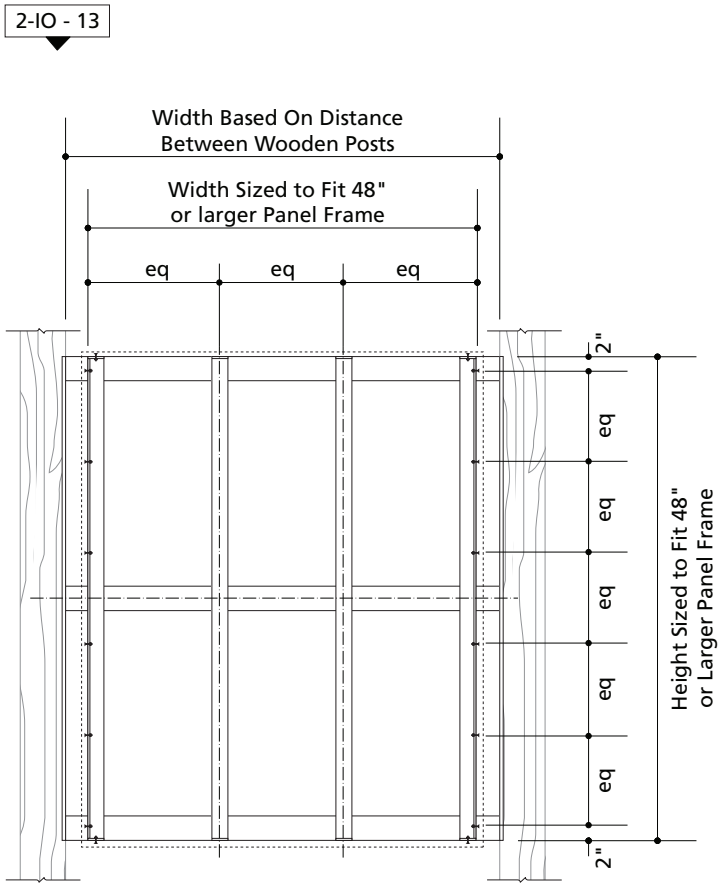

1-IO - 13 Strap Elevation (48" or Larger Panels)

Scale: 1/2"=1'-0"

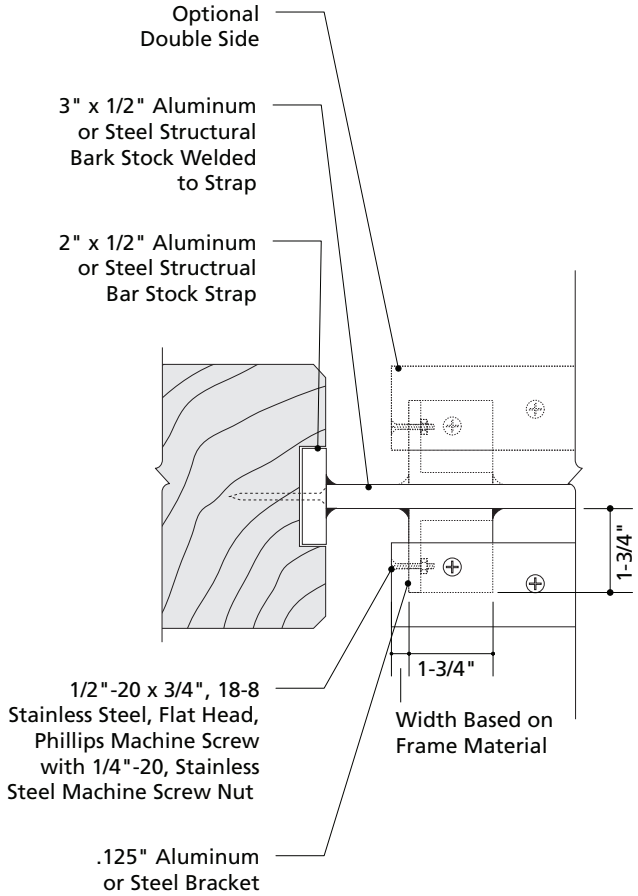

2-IO - 13 Strap Connection Detail, Plan View

Scale: 3"=1'-0"

Reference Charts

VIS Post Size Charts

Low Profile Hardware Post Chart

Panel Width

Panel Height	6	12	18	24	36	48
6	NA BS	2 x 2 BS	2 x 2 BS	2 x 3	2 x 3	2 x 3
12	NA BS	2 x 2 BS	2 x 2	2 x 3	2 x 3	2 x 3
18	NA BS	2 x 2	2 x 2	2 x 3	2 x 3	2 x 3
24	NA	2 x 3	2 x 3	2 x 3	2 x 3	2 x 3

Upright Hardware Post Chart

Panel Width

Panel Height	6	12	18	24	36	48
6	NA BS	2 x 2 BS	2 x 2 BS	2 x 3	2 x 3	NA
12	2 x 2 BS	2 x 2 BS	2 x 2	2 x 3	2 x 3	2 x 3
18	2 x 2 BS	2 x 2	2 x 2	2 x 3	2 x 3	2 x 3
24	NA	2 x 3	2 x 3	2 x 3	2 x 3	2 x 3
36	NA	2 x 3	2 x 3	2 x 3	2 x 3	NA
48	NA	2 x 3	2 x 3	2 x 3	2 x 3	NA

Inline and Quad Hardware Post Chart

Panel Size

Kiosk Type	24 x 36	36 x 48
n2	2 x 3	3 x 5
n3	2 x 3	3 x 5
Quad	4 x 4	6 x 6

VIS Weld and Rivets Charts

Weld Joints Per Frame Chart

Panel Width

Panel Height	6	12	18	24	36	48
12	0 / 2 / 2 / 0	2 / 2 / 2 / 2	2 / 2 / 2 / 2	2 / 2 / 2 / 2	4 / 2 / 2 / 4	4 / 2 / 2 / 4
18	0 / 2 / 2 / 0	2 / 2 / 2 / 2	2 / 2 / 2 / 2	2 / 2 / 2 / 2	4 / 2 / 2 / 4	4 / 2 / 2 / 4
24	N/A	2 / 2 / 2 / 2	2 / 2 / 2 / 2	2 / 2 / 2 / 2	4 / 2 / 2 / 4	4 / 2 / 2 / 4
36	N/A	2 / 3 / 3 / 2	2 / 3 / 3 / 2	2 / 3 / 3 / 2	3 / 3 / 3 / 3	N/A
48	N/A	2 / 3 / 3 / 2	2 / 3 / 3 / 2	2 / 3 / 3 / 2	3 / 3 / 3 / 3	N/A

Rivets Per Frame Chart

Panel Width

Panel Height	6	12	18	24	36	48
12	2 / 2	2 / 2	3 / 3	2 / 2	2 / 2	2 / 2
18	3 / 3	3 / 3	3 / 3	3 / 3	3 / 3	3 / 3
24	N/A	3 / 3	3 / 3	3 / 3	3 / 3	3 / 3
36	N/A	3 / 3	3 / 3	3 / 3	3 / 3	N/A
48	N/A	3 / 3	3 / 3	3 / 3	3 / 3	N/A

Top Rail Screw Location for Top Rails Chart

Rail Length

6	12	18	24	36	48
2 / 2	3 / 3	3 / 3	3 / 3	3 / eq / eq / 3	3 / eq / eq / 3
• •	• •	• •	• •	• • •	• • •

Numbers are in inches.

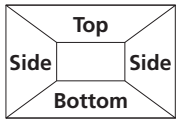

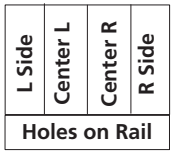

Weep Hole Location Chart

Panel Width

6	12	18	24	36	48
2 / 2	3 / 3	3 / 3	3 / 3	3 / eq / eq / 3	3 / eq / eq / 3
• •	• •	• •	• •	• • •	• • •

Section VII

Specifications

General Requirements 179

Materials Overview 182

General Requirements

The Visitor Information System (VIS) consists of a standard group of post–and–frame components and accessories that are fabricated from aluminum or steel and mechanically assembled. Refer to the VIS Sign Fabrication Drawings for specific details and fabrication guidelines.

Frames

The VIS System includes a fabricated panel capture frame with a removable top rail cap and a structural core panel. The frame is designed to contain and capture the graphic panel on four sides. Frames can be configured for one or two-sided display.

Frames fabricated in aluminum utilize an NPS standard "F" extrusion welded to a solid sheet aluminum core panel for structural rigidity. The frame features a removable top extrusion secured with tamper proof hardware to allow installation and removal of graphic panels.

Two-sided frames utilize a break-formed channel system with floating internal core panels for structural rigidity. The top channel is removable and secured with tamper proof hardware.

Frames fabricated from steel (including one and two–sided structures) utilize a break–formed channel system with floating internal core panels for structural rigidity.

Posts

The VIS system features aluminum and steel tubular posts. Posts material for upright and low profile bases includes tubular aluminum and carbon steel in 2" x 2", 2" x 3" sizes, and 1/2" x 2" bar stock. Carbon steel can be galvanized for marine environments.

Panels

Sign panels are inserted into the frame in front of the core panel. The sign frames accommodate a variety of graphic panel types including porcelain enamel, fiberglass embedment, polycarbonate embedment, high pressure laminate, digitally printed adhesive vinyl on aluminum with protective overlaminates, or computer cut retro–reflective sheeting on aluminum. The frame system can accommodate panel thicknesses from .090 up to .125.

Unless otherwise approved by the NPS, signs and sign assemblies shall be manufactured using materials and fabrication processes as described in these specifications and in the companion technical drawings.

Dimensions

Inch dimensions are used for legend size and all related dimensions including layout grids, panel sizes, post lengths, mounting height, and post drilling for connection of panel to post. All hardware, machine parts (cast caps, mechanical fasteners, connection details), and materials (tube, dimensional lumber) are specified in inches. Dimension for assemblia and panels are listed by length x width.

Note: Panel dimensions described in this manual are nominal. Nominal sizes are used for ease of specification. Fabricated panels shall be undercut by 1/16" on each side. For example a specified, nominal 24" x 36" panel, shall be fabricated to a finished size of 23–7/8" x 35–7/8".

The outer dimensions of the frame and core panel assembles shall be 1/2" larger than the specified nominal size. For example a nominal 36" x 24" assembly shall be fabricated to an outer dimension of 36 1/2" x 24 1/2".

Hardware

The contractor shall provide all hardware, including screws, rivets, wej-it studs, threaded roads and j-bolts as required to fully assemble and install each base or assembly structure.

Material Options and Substitutions

All materials shall be new and of first quality. Materials shall meet or exceed the standards and specifications herein or by reference. All materials and fabrication methodology shall comply with this specification or be an “approved equal”.

A limited number of materials have been specified by manufacturer’s trade name. These products are specified as examples and not to limit use of alternative products and suppliers that are of equal or superior quality.

Function

These specifications are provided as a guideline for the fabrication, assembly, and installation of VIS signs and wayside exhibits. Additional instructions and requirements including modifications to structures and details may be provided within individual contracts. Fabricators may propose and the NPS may approve deviations to the construction of VIS bases as long as external features and dimensions remain unchanged.

Sign Identification Codes

Signs within the VIS system are identified by a series of reference code numbers that indicate the type of sign, sign panel/frame size, material mounting type, mounting accessory, and accessory. Refer to the Overview section of this manual for a description ofthe VIS Code System.

Reference Standards

American Society for Testing and Materials standard specification for Aluminum and Aluminum Alloy Sheet and Plate (ASTM- 6061-T5 extruded shapes with Type 2: Black anodized finish, and 3003-H16, 3003-H14, 2024-T3, 6061-T6, and 5052-H34 aluminum plate).

American Society for Testing and Materials standard specification for Stainless Steel tube and structural shapes (ASTM- 316L and 18-8).

American Society for Testing and Materials standards for Weathering Steel ASTM-588 (A-847 as a tube product).

American Society for Testing and Materials, and American Institute for Hollow Structural Sections standards (HSS) for ASTM-500; Standard Specification for Cold-Formed Welded and Seamless Carbon Steel Structural Tubing in Rounds and Shapes.

American Society for Testing and Materials standard specification D-523 for paint gloss and D-4587 for accelerated weathering cycles for paint.

American Society for Testing and Materials: Standards for threaded steel rod and “J” bolts

Structural Engineering

All structures have been engineered to meet typical conditions for all national parks. Special conditions that are outside these parameters shall be engineered on a site specific basis.

Quality of Materials

All materials shall be new and of first quality. Materials shall meet or exceed the standards and specifications herein or by reference. Factory seconds shall not be accepted. All materials shall comply with this specification or approved equal.

Engineering

The following criteria have been used as the standards governing material specifications, assemblies and footings for all NPS VIS signs unless otherwise specified or engineered.

Wind Pressure : 20 PSF ***
Soil: 1-TSF (2 KSF)-Minimum * **
Frost Depth : 36" Maximum unless otherwise noted
Concrete: 3000 PSI. / 28 days

* For all direct embedment footings, backfill in 6" lifts tamped to 95% compaction.

** Subgrade materials are assumed to be organic free sand/gravel/silt, or mixture of same, with bearing capacity of 1-TSF (2 KSF) min, subject to inspection.

*** Exceptions include sign placements along the Gulf of Mexico and in the region of Cape Hattaras, with installa tions engineered site specific to the location.

If these criteria are not adequate for a specific sign location, modifications shall be made to conform to the specified site conditions in order to maintain structural integrity. Modifications may include, but are not limited to, thicker panels, larger dimension sign posts, additional structural bracing or components, or larger footing configuration and additional steel rebar.

The design of the structural requirements of special one–of–a–kind signs shall conform to the basic assembly specifications for similar sign types. The modified assembly shall fulfill the requirements of local criteria for wind pressure, soil, and frost depth.

Materials Overview

This section covers material specifications for all components used in the UniGuide Visitor Information System.

Aluminum

Aluminum Frame Extrusions

Extruded aluminum (6061-T6 or 6063-T6/T651), NPS standard “F” channel extrusion. Refer to Chapter VI for drawings and additional information.

Extruded aluminum (6061-T6 or 6063-T6/T651), NPS standard angle top frame extrusion. Refer to Chapter VI for drawings and additional information.

Extruded aluminum (6061-T6 or 6063-T6/T651), NPS standard angle bracket extrusion. Refer to Chapter VI for drawings and additional information.

Aluminum Posts

2" x 2" x 1/8" wall tubular aluminum (6063-T6) posts with 1/8”- 3/16” corner radius for upright and lowprofile assemblies.

3" x 2" x 1/8" wall tubular aluminum (6063-T6) posts with 1/8”- 3/16” corner radius for upright and lowprofile bases, and 24" x 36" double and triple inline assemblies.

1/2" x 2" aluminum barstock (6063-T) for upright and low profile assemblies.

4" x 4" x 1/8" wall tubular aluminum (6063-T6) posts for 24" x 36" and 36" x 48" upright quad post assemblies.

3" x 5" x 1/8" wall tubular aluminum (6063-T6) posts with 1/8”- 3/16” corner radius for 36" x 48" double and triple inline assemblies.

6" x 6" x 1/8" wall tubular aluminum (6063-T6) posts with 1/8”- 3/16” corner radius for 36" x 48" upright quad assemblies with roof structure.

1/4" flat sheet aluminum (5052-H32 or 6061-T6/T651) for trailside assemblies.

Aluminum Core Panels

3/16" flat sheet aluminum (5052-H32 or 6061-T6/T651) core panel for upright and low profile bases.

Aluminum Break-formed C-Channel

.125" sheet aluminum (5052-H32 or 6061-T6/T651) for breakforming C–channels and angles for two-sided frame applications and channels for wall mounts.

Aluminum Baseplates

3/8" plate aluminum (5052-H32 or 6061-T6/T651) for machined drilling of baseplates for base mounting with j–bolts. See drawings in Section VI for base plate details.

Aluminum Hardware

3/8" drive rivets to attach aluminum frame to post legs.

Stabilizer Plates and Fins

6" x 6" x 1/4" sheet aluminum (5052-H32 or 6061-T6/T651) stabilizer plates welded to bottom of posts to mitigate settling of tubular aluminum upright and low profile posts (as specified).

1/8" x 10" x 26" 1/4" sheet aluminum (5052-H32 or 6061-T6/T651) stabilizer fins welded or bolted to posts to stabilize embedment of tubular aluminum uprights and low profile posts (as specified).

Weathering Steel

Weathering Steel Posts

2" x 2" x 1/8" wall tubular weathering steel (A-847) for upright and low profile bases.

2" x 3" x 1/8" wall tubular weathering steel (A-847) for upright and low profile bases, and 24” x 36” double and triple inline assemblies.

1/2" x 2" barstock (A-847) for upright and low profile bases.

4" x 4" x 1/8" wall tubular weathering steel (A-847) for 24" x 36" and 36" x 48" upright quad post assemblies.

3" x 5" x 1/8" wall tubular weathering steel (A-847) for 36" x 48" double and triple inline assemblies.

6" x 6" x 1/8" wall tubular weathering steel (A-847) for 36" x 48" upright quad assemblies with roof structure.

1/8" weathering steel plate (A-847) for fabricated posts for upright tri–side assemblies.

1/4" weathering steel plate (A-847) for trailside assemblies.

Steel Core Panels (Painted)

1/8" steel plate (A-36) for painted core panel.

Weathering Steel Break-formed C-Channel

1/8" weathering steel plate (A-847) for breakforming C–channels and angles for two–sided frame applications for upright assemblies and frames for low profile assemblies.

Weathering Steel Baseplates

3/8" weathering steel plate (A-847) for welded baseplates for assemblies with tubular uprights and bar stock uprights.

Steel Hardware

3/8" pop rivets to attach steel frame to post legs.

Stabilizer Plates and Fins

6" x 6" x 11-gauge steel plate (A-847) stabilizer plated welded to bottom of posts to mitigate settling of tubular steel uprights (as specified).

1/8" x 10" x 26" steel plate (A-847) stabilizer fins welded or bolted to posts to stabilize embedment of tubular steel uprights (as specified).

Stabilizer Bars

1/2" steel plate (A-847) for stabilizer bars to prevent post rack and torque (as specified).

Galvanized Steel

Galvanized Steel Posts

Note: at the election of the contractor, A-847 material can be galvanized in–lieu of A-500-B material.

2" x 2" x 1/8" wall tubular steel (A500B) for upright and low profile bases.

2" x 3" x 1/8" wall tubular steel (A500B) for upright and low profile bases, and 24" x 36" double and triple inline assemblies.

1/2" x 2" barstock (A500B) for upright and low profile bases. 4" x 4" x 1/8" wall tubular steel (A500B) for 24" x 36" and 36" x 48" upright quad post assemblies.

3" x 5" x 1/8" wall tubular steel (A500B) for 36" x 48" double and triple inline assemblies.

6" x 6" x 1/8" wall tubular steel (A500B) for 36" x 48" upright quad assemblies.

1/8" steel plate (A36) for galvanized fabricated posts for upright tri–side assemblies.

1/4" steel plate (A36) for galvanized trailside assemblies.

Steel Core Panels (Painted)

1/8" steel plate (A-36) for galvanized core panel.

Galvanized Steel Baseplates

3/8" steel plate (A36) for welded baseplates for machined drilling of baseplates for base mounting with j–bolts. See drawings in Section VI for base plate details. 1/4" x 2" steel plate (A-36) welded baseplate straps for wood upright assemblies.

Steel Hardware

3/8" pop rivets to attach steel frame to post legs.

Stabilizer Plates and Fins

6" x 6" x 11–gauge steel plate (A-36) stabilizer plates welded to bottom of posts to mitigate settling of tubular steel uprights (as specified).

1/8" x 10" x 26" steel plate (A-36) stabilizer fins welded or bolted to posts to stabilize embedment of tubular steel uprights.

Stabilizer Bars

1/2" steel plate (A-36) for stabilizer bars to prevent post rack and torque (as specified).

Hardware

Wall Mounted Assemblies

1/4"-20 x 1" stainless steel round head screw (McMaster Carr 91783A533) with stainless steel flat washer (McMaster Carr 92141A029) and wall anchor for attaching assembly.

Anchor bolts and baseplate attachment

3/8"-16 x 14" stainless steel (18-8) "J" bolts (McMaster Carr-91615A140), with stainless steel hex nut (McMaster Carr-91849A031) for leveling and heavy duty stainless steel 1" dia. washer (McMaster Carr-98019A200) for mounting with concrete footing.

3/8" flat washers (McMaster Carr 92141A031) and hex nuts (McMaster Carr 91845A031), thin nuts (McMaster Carr 91847A031), and stainless steel (304) finishing acorn nut (McMaster Carr-92994A031) for baseplate attachment.

3/8"-16 stainless steel (18-8) heavy hex nut welded to bottom of stem footing baseplate for mounting bolt attachment (McMaster Carr-91849A031) Bolts for mounting to deck.

3/8" x 4" zinc plated hex head lag screw (McMaster Carr-91478A640) to attach baseplates to wood decks.

3/8" x 3" zinc plated hex head machine bolt (McMaster Carr 91236A636), washers and hex nuts to through bolt baseplates to wood decks.

3/8" x 4" zinc plated carriage bolt (McMaster Carr-93548A636), washers and hex nuts to through bolt supporting “L” brackets to wood decks.

3/8" x 8" zinc plated carriage bolt (McMaster Carr-93545A652), washers and hex nuts to through bolt C.1 upright to face of deck joist.

Paint

All aluminum VIS bases, posts, and frame components shall be primed and painted with a 2-part epoxy paint system (top coat and hardener) with satin finish suitable for use on metal in high traffic outdoor environments.

Cleaning and Preparing the Metal
The surface of all aluminum post and frame components shall be properly prepared to ensure strong adhesion of the primer and topcoat. All oil, dirt, rust, metal burrs and any foreign materials shall be removed. All components shall be free of defects. All welded joints shall be ground smooth and clean. All dust or residue from abrasive cleaners or solvent cleaners shall be removed. A light scuffing/sanding shall provide “tooth” for the primer to adhere to the metal surfaces.

All surfaces are to be prepared and primed according to manufacturer specifications.

Color Finish Topcoat
Unless otherwise specified on approved drawings a semi gloss spattercoat textured finish shall be the standard for all NPS VIS aluminum bases. Paint application shall be applied in two parts: the first top coat color application followed by a second spattercoat textured color finish. The spattercoat finish shall be medium coarse and applied per approved samples. The color topcoat finish shall be Matthews VOC

Paint shall be applied in accordance with manufacturer specifications.

Paint Color Finish

All paint colors used on NPS VIS bases are custom mixed colors with specific formulas. All colors have been matched utilizing Matthews Paint. All bases shall be painted using Matthews Paint or an approved equal 2-part epoxy paint system (top coat and hardener) with satin finish suitable for use on metal in high traffic outdoor environments. Where approved equals are supplied the final colors shall be matched and approved prior to application.

NPS Brown

Matthews Paint, MP63848 w/Spattercoat.

NPS Medium Grey

Matthews Paint, MP63850 w/Spattercoat

NPS Dark Brown

Matthews Paint, MP63856 w/Spattercoat

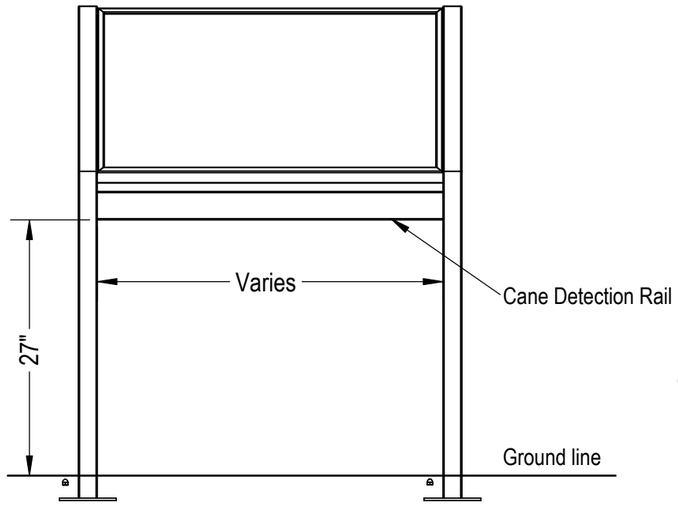

1 Sheet1 Front View
Scale: 3/4"=1'-0"

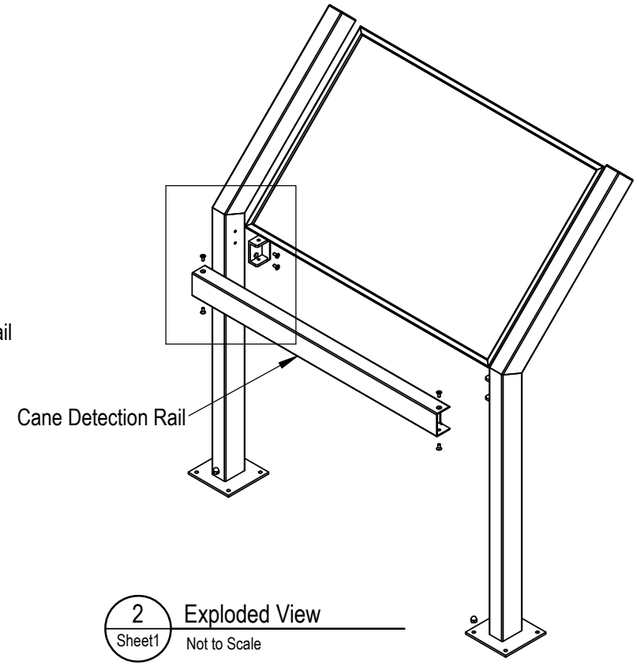

2 Sheet1 Exploded View
Not to Scale

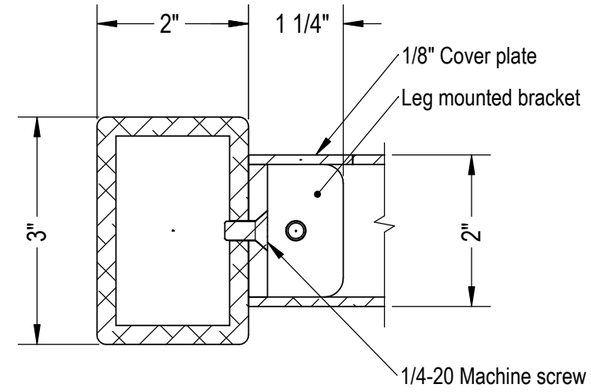

4 Sheet1 Section Detail
Scale: Half Actual Size

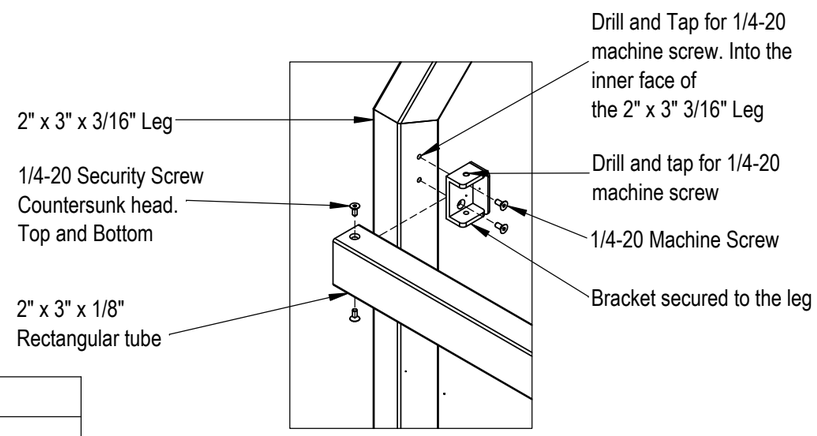

3 Sheet1 Exploded Detail View
Not to Scale

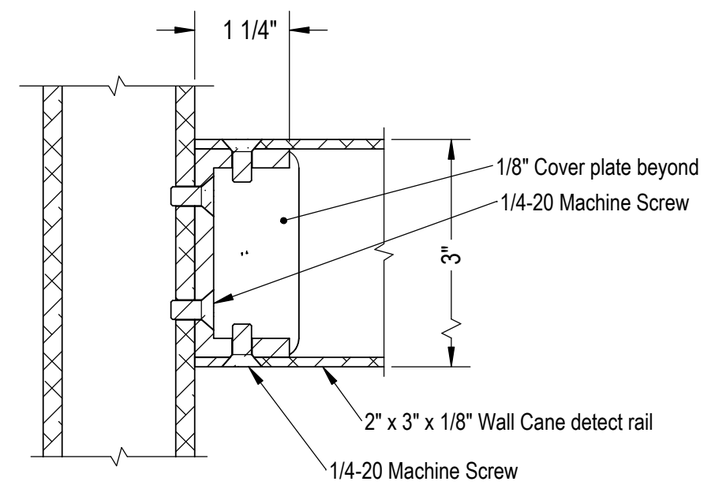

5 Sheet1 Section Detail
Scale: Half Actual Size

Table of Parts		
QTY	Part	Dimensions
1	Cane Detection Rail	3" x 2" x 1/8" Length as required
2	Leg Mounted Bracket	2 3/4" x 1 3/4"
4	1/4-20 CSK Machine Screws	5/8" Thread length Min.
4	1/4-20 CSK Security Machine screws/ Pin Torx	5/8" Thread length Min.

Drawings here depict the NPS's proposed method of adding a cane detection bar to an existing exhibit base.

Fabricators may propose methods for adding a cane detection bar to newly constructed bases for NPS review and approval. Detection bars must satisfy ABA requirements and not alter the overall look or function of the sign base.

Waysides must conform to standards to ensure they are safe for visitors who are blind or have low vision. This requires that bases greater than 12" between legs or greater than 12" on either side of a center leg shall be cane detectable along accessible routes, and within circulation areas and paths. For elements that protrude 4" or more on an accessible route or in a circulation space or path, minimum cane detectability is 27" from the ground to the bottom of the panel. This requirement includes all areas regardless if they are accessible by persons who use wheelchairs or other mobility devices. This cane detectable wayside base option meets requirements for protruding objects in the Architectural Barriers Act Accessibility Standards.

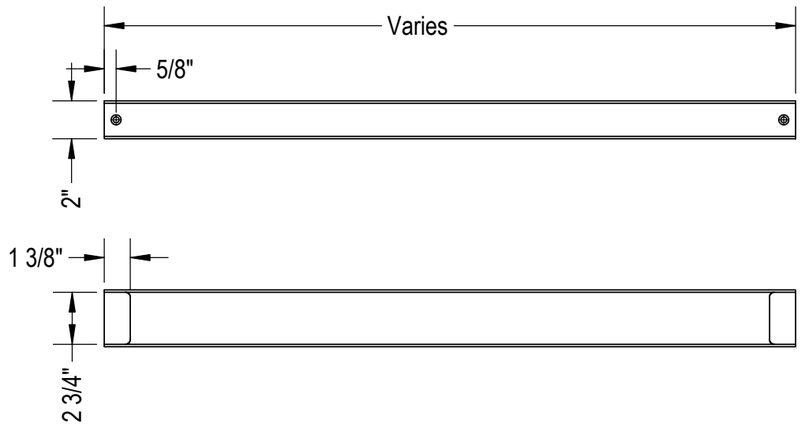

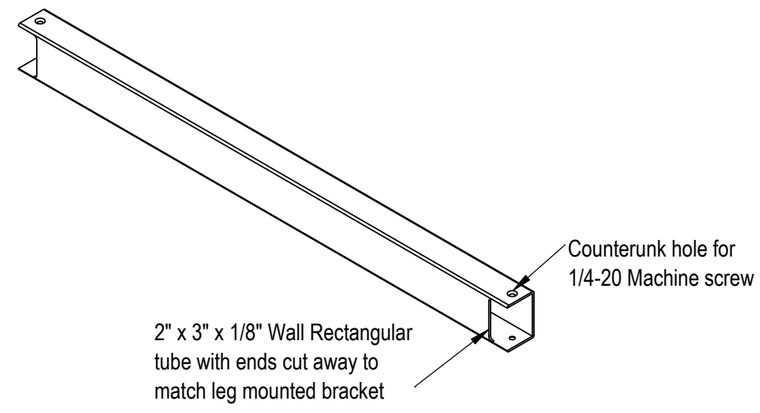

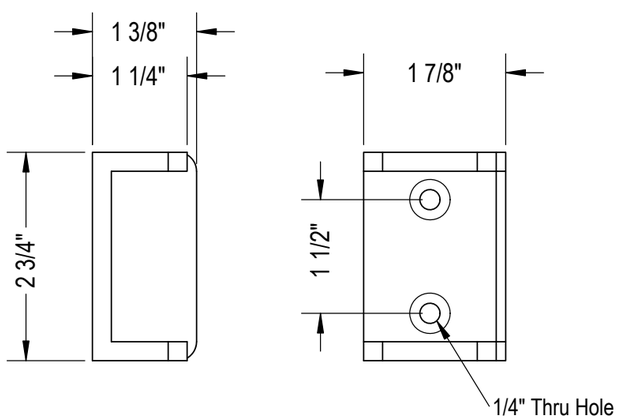

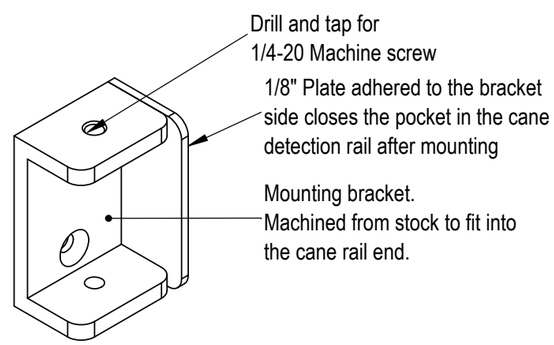

Drawings here depict the NPS's proposed method of adding a cane detection bar to an existing exhibit base.

Fabricators may propose methods for adding a cane detection bar to newly constructed bases for NPS review and approval. Detection bars must satisfy ABA requirements and not alter the overall look or function of the sign base.

Waysides must conform to standards to ensure they are safe for visitors who are blind or have low vision. This requires that bases greater than 12" between legs or greater than 12" on either side of a center leg shall be cane detectable along accessible routes, and within circulation areas and paths. For elements that protrude 4" or more on an accessible route or in a circulation space or path, minimum cane detectability is 27" from the ground to the bottom of the panel. This requirement includes all areas regardless if they are accessible by persons who use wheelchairs or other mobility devices. This cane detectable wayside base option meets requirements for protruding objects in the Architectural Barriers Act Accessibility Standards.