Liebert Rating System (LRS) 3.6.0.10w 4.4.3.18e

Project Name:	**TOGUS MAINE VA**	Office Name:	**Vertiv, Seattle Office**
Customer Name:		Phone Number:	**+1 206 763 5000**
Sales Rep. Name:	**MATTHEW CAMPBELL**		

DSE Model DA125DP~2xMCL165E1 w/Econophase; Air Cooled

Manufacturer:	**Liebert North America**	Altitude:	**0 ft**
Unit Power Supply:	**460/3/60**	ESP:	**0.20 InH2O**
Refrigerant:	**R410A**	Width:	**144 in**
Internal Filter Class:	**Merv 8 Std. - 4 inch (102 mm)**	Depth:	**47 in**
Spec.sheet output date:	**19-Jul-23**	Height:	**76 in**
Return Airflow (std. motor):	**18000 ACFM**	Weight:	**4100 lb**

Condenser(s)

Manufacturer:	**Liebert North America**
Model:	**2xMCL165E1**
Condenser Type:	**MCH Condenser**
Design Ambient:	**105 °F**
Power Option:	**460/3/60**

Compressor/Pump(s)

Manufacturer:	**Copeland**
Model:	**ZPDT18MCE-60**
Compressor Type:	**TandemDigital**
Power Supply:	**460/3/60**
Manufacturer:	**Copeland**
Model:	**ZPDT18MCE-60**
Compressor Type:	**TandemDigital**
Power Supply:	**460/3/60**
Model:	**HPI41D**
Pump Type:	**TurbineRegen**
Model:	**HPI41D**
Pump Type:	**TurbineRegen**

Evaporator(s)

Manufacturer:	**Liebert North America**
Model:	**RTDA125Evapx2**
Fin Type:	**Lanced**
Number of Rows:	**6**
Fin Density:	**12 fpi**
Face Area:	**56.25 ft²**
Surface Area:	**7920 ft²**

Miscellaneous

Humidifier Type:	**Infrared**
Model:	**IR_22lb_9.6kW**
Bypass airflow:	**1 %**

Cooling Fan(s)

Model:	**EC-630-2.8kW-UP**
Description:	**DSE - DX w/PRE, w/EC Fans in the unit**
Air Supply:	**Bottom**
Power Supply:	**460/3/60**
Quantity of Motors:	**3**

System: [Compressorized Mode: Scroll: On, Digital Loading: 100%, SC: 0 °F, SH: 13 °F] [ESP:0.2]
System: [Compressorized Mode: Scroll: On, Digital Loading: 100%, SC: 0 °F, SH: 13 °F] [ESP:0.2]

Ent DB (°F)	Ent WB (°F)	Ent RH (%)	Ent DP (°F)	Return Air Vol (ACFM)	Supply Air Vol (ACFM)	Air Face Vel (ft/min)	Unit Air Vol (SCFM)	Amb DB (°F)	NTCC (kBtu/hr)	NSCC (kBtu/hr)	THR (kBtu/hr)	Cond. Airflow (ACFM)	Lvg DB (°F)	Lvg WB (°F)	Tot Comp Pwr (kW)	Sys Power Input (kW)	Sys SCOP (W/W)	Sys NSenCOP (W/W)	Fan kW (kW)	Airflow Calibration (V)	Total Pump Power (kW)
75	61.1	45	52.3	18000	17359	317	17575	105	376	365	488.4	63232	56.1	53.6	28.7	45.7	2.34	2.34	7.44	9.4	0

System 1

Compressor Power (kW)	Sat. Discharge Temp. (°F)	Sat. Suction Temp. (°F)
14.5	114.6	57.9

System 2

Compressor Power (kW)	Sat. Discharge Temp. (°F)	Sat. Suction Temp. (°F)
14.21	113.2	48.4

Notes

1. Capacities shown have been reduced by fan motor(s) heat (net).
2. System Power Input includes Compressor(s), Blower Motor(s), Condenser(s), and Control Power.
3. Coil airflow is reduced by a bypass of 1% of total unit airflow.
4. Capacity Tolerance is 5%.
5. ACFM/ACMH is the unit actual air flow rate when measured at the specific return or supply temperature and barometric conditions that define a unique air density.
6. SCFM/SCMH is the unit air flow rate when converted to standard air density of 0.075 lb/ft3 at sea level.
7. NTCC, Net Total Cooling Capacity
8. NSCC, Net Sensible Cooling Capacity

AHRI CERTIFIED®
www.ahridirectory.org
Datacom Cooling
AHRI Standard 1360

Certified in accordance with the AHRI Datacom Cooling Certification Program at AHRI Standard 1360 (I-P) and ASHRAE Standard 127-2007 Standard Rating Conditions. Certified units may be found in the AHRI Directory at www.ahridirectory.org.

© 2023 Liebert Corporation. All Rights Reserved

ELECTRICAL REQUIREMENTS FOR DA125DP WITH HUMIDIFICATION AND REHEAT:

460VAC, 3PH, 60HZ
FLA: 79.9
WSA: 92.2
OPD: 100

LIEBERT DSE

CABINET DIMENSIONAL DATA

DOWNFLOW AIR COOLED DA125, DA150 & DA165 MODELS

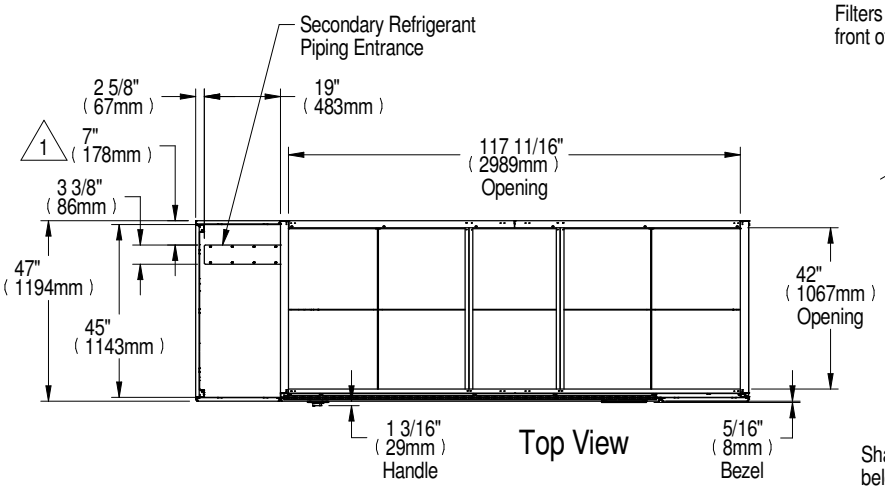

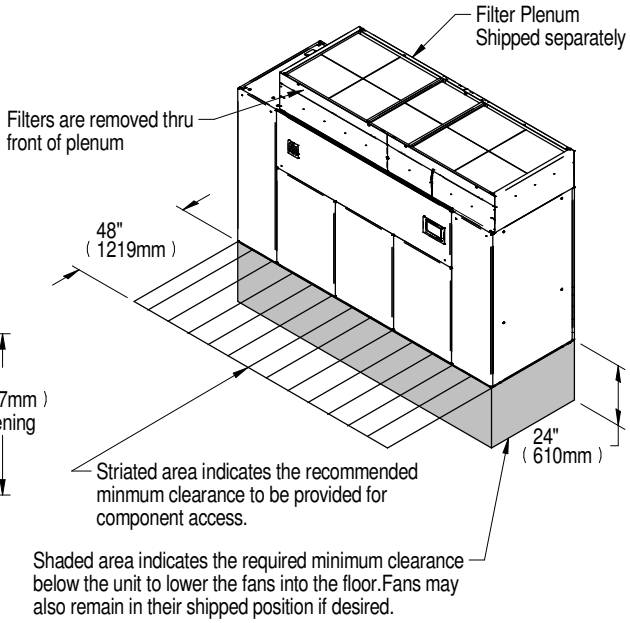

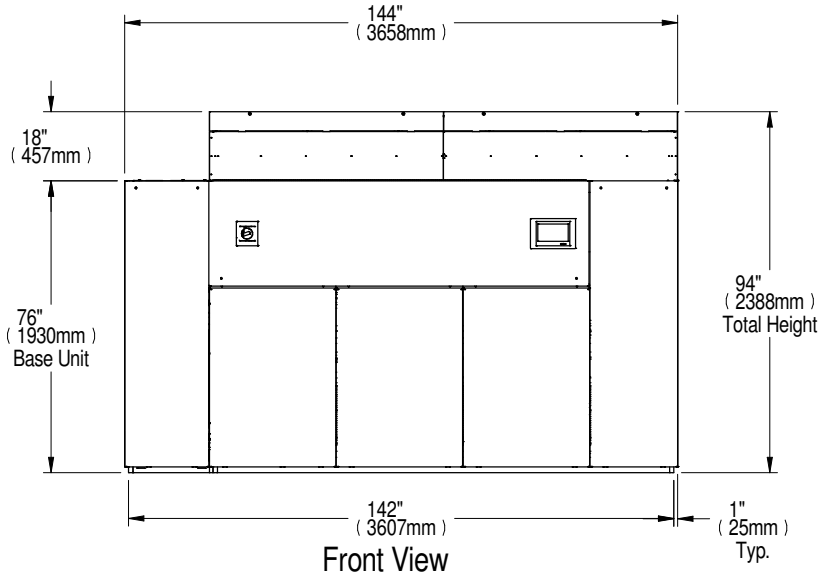

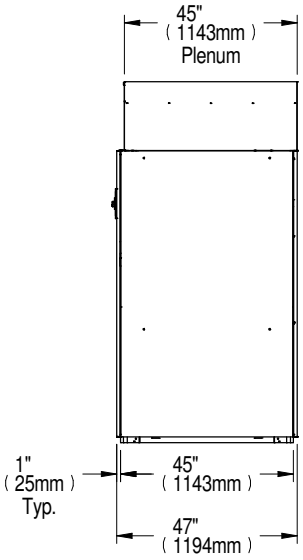

Model No.	Approximate Dry Weight lb(kg)
DA125	3465 (1572)
DA150/DA165	3574 (1621)

Notes:

1. 7" for DA125, 4" for DA150 & DA165.

PUMPED ECONOMIZER PUMP SET
USED WITH MCL165 CONDENSERS, 1 PUMP SET
PER INDOOR UNIT.

PR125AA ELECTRICAL:
460VAC, 3PH, 60HZ
FLA: 7.0
WSA: 7.9
OPD: 15

VERTIV

LIEBERT ECONOPHASE

CABINET DIMENSIONAL DATA

PR050 - PR250

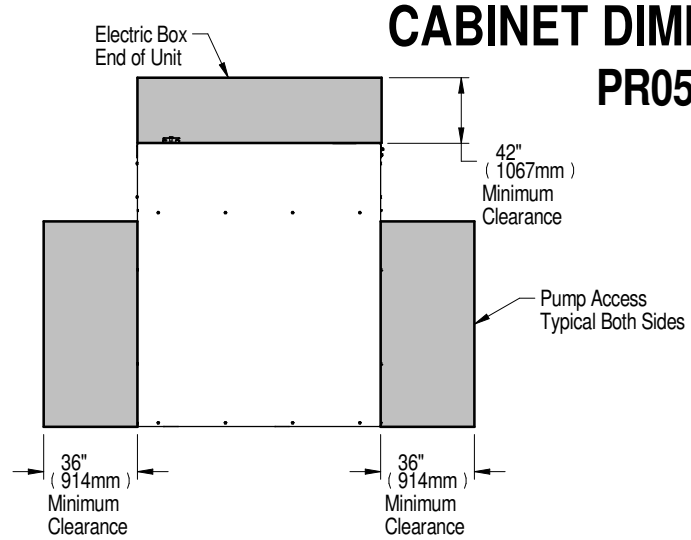

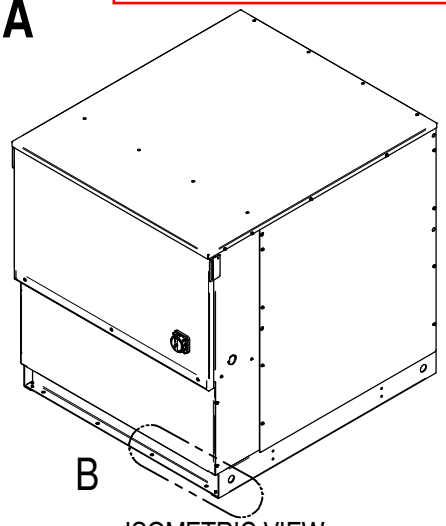

ISOMETRIC VIEW

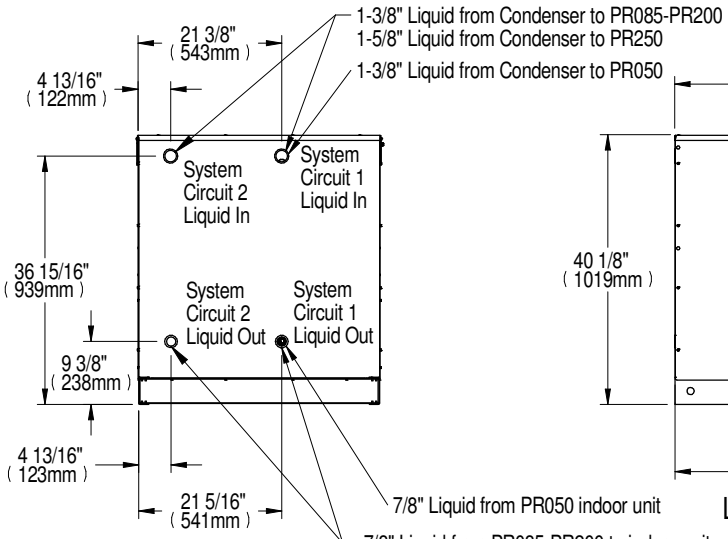

REAR VIEW
(PIPING END)

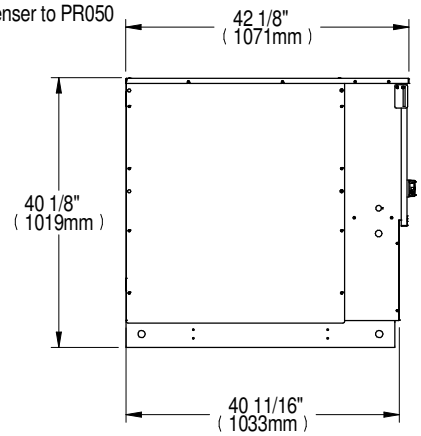

LEFT SIDE VIEW

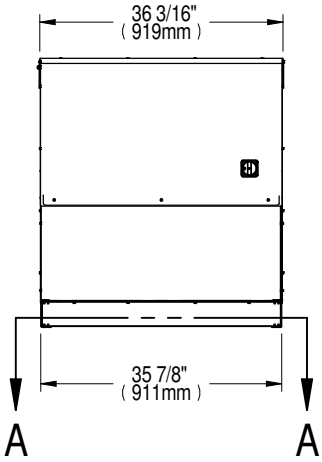

FRONT VIEW

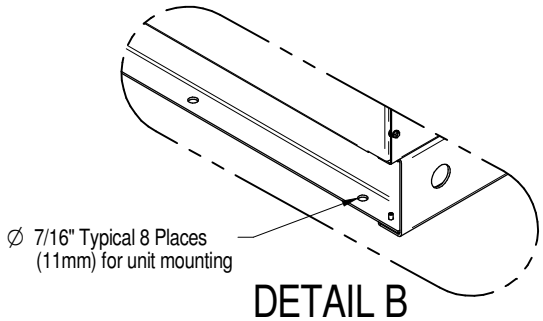

DETAIL B

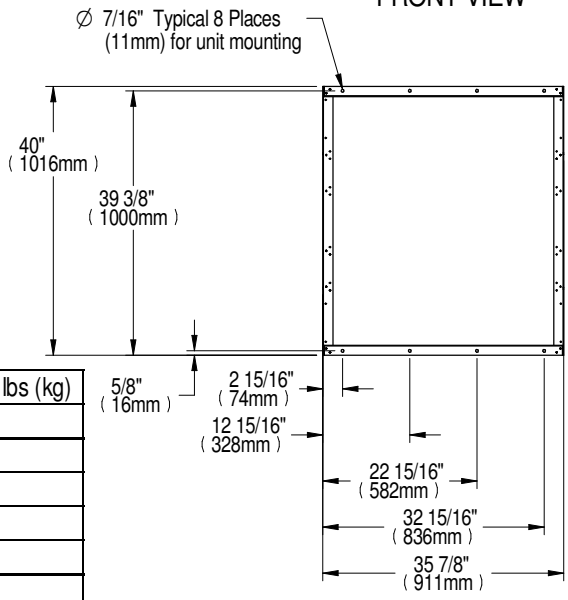

SECTION A-A

Model	Circuits	Unit Voltage, Hz	Approximate Dry Weight lbs (kg)
PR050	1	208/230V, 460V 60Hz	217 (98)
		380V, 575V 60Hz	242 (110)
		415V 50Hz	217 (98)
PR085-125 and PR250	2	208/230V, 460V 60Hz	340 (154)
		380V, 575V 60Hz	390 (177)
		415V 50Hz	347 (157)
PR200	2	460V 60Hz	350 (159)

2 CONDENSERS REQUIRED PER INDOOR UNIT

MCL165 ELECTRICAL:
460VAC, 3 PH, 60HZ
FLA: 8.4
WSA: 9.1
OPD: 15.0

VERTIV

LIEBERT MC CONDENSER

CABINET & ANCHOR DIMENSIONAL DATA

3 FAN (MCL165)

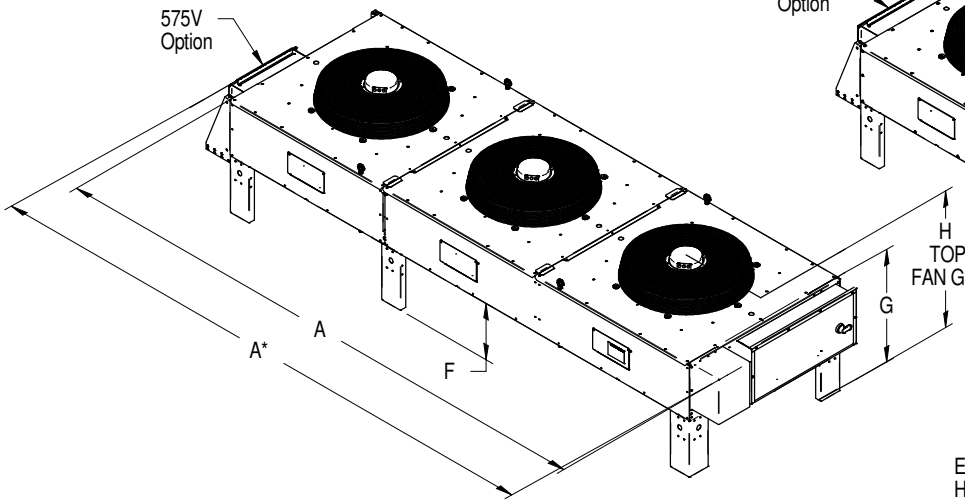

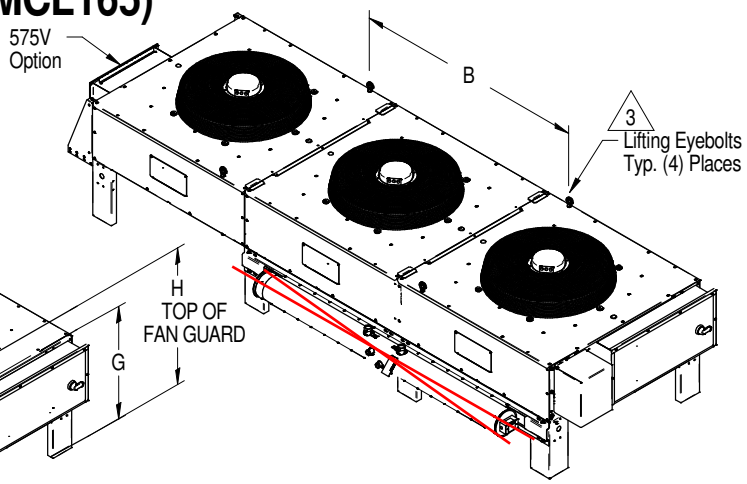

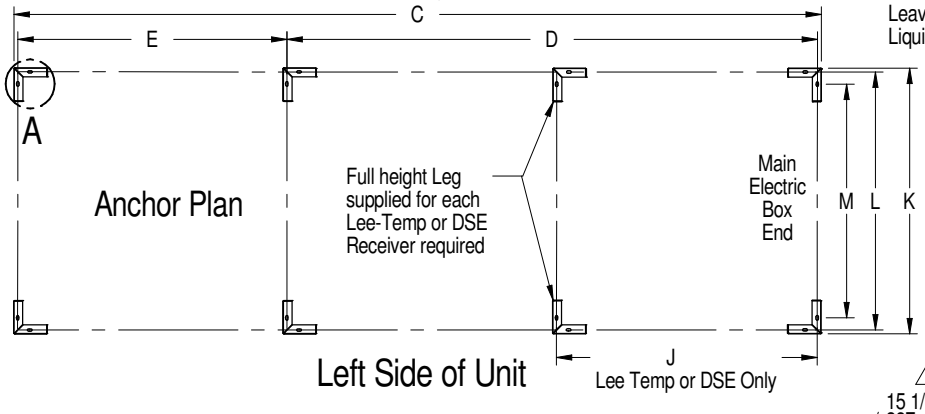

Left Side of Unit

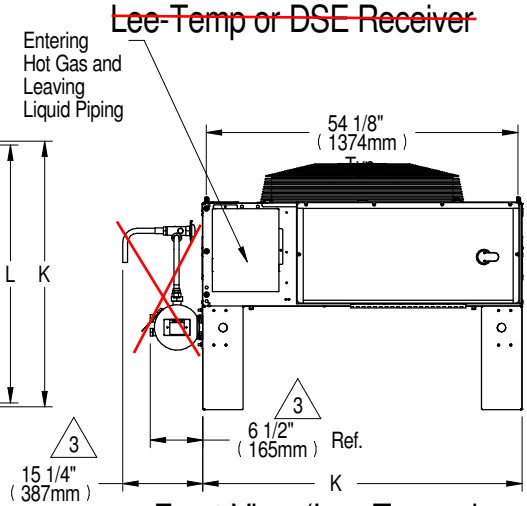

Front View (Lee-Temp shown)

Note:
1. Liebert recommends a clearance of 36" (915mm) on each side for proper operation and component access.

2 Cross Bracing required for legs longer than 18" (457.2mm). quantity varies per model & options selected.

3 For DSE models only, 6-1/2" (165mm) dimension is 9-1/4" (235mm) and 15-1/4 (387mm) dimension is not applicable.

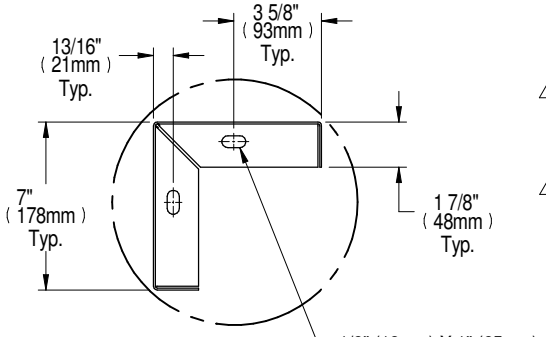

DETAIL A
Typical All Legs

LIEBERT MODEL NUMBER	F 2 LEG HEIGHT DIMENSIONS in. (mm)			
MCL165	18 (457)	36 (914)	48 (1219)	60 (1524)
DIM "G"	35-7/8 (911)	53-7/8 (1368)	65-7/8 (1673)	77-7/8 (1978)
DIM "H"	43-5/8 (1108)	61-5/8 (1565)	73-5/8 (1870)	85-5/8 (2175)

Dimensions in. (mm)										
LIEBERT MODEL NUMBER	A	A* (575V ONLY)	B	C	D	E	J Lee-Temp or DSE Reciever	K	L	M
MCL165	180-1/4 (4578)	189-1/4 (4807)	73-7/16 (1866)	168-1/4 (4274)	110-1/2 (2806)	56-1/8 (1425)	54-3/8 (1381)	55-1/2 (1410)	53-7/8 (1368)	48-3/4 (1238)

ALTERNATE CONDENSER SELECTION, 1 CONDENSER REQUIRED PER INDOOR UNIT. THIS CONDENSER INCLUDES THE ECONOMIZER PUMP SET FACTORY INSTALLED AS PART OF THIS CONDENSER ASSEMBLY.

VERTIV

LIEBERT® HEAT REJECTION SKID

CABINET & ANCHOR DIMENSIONAL DATA

MCV330 + ECONOPHASE + BASE ASSEMBLY

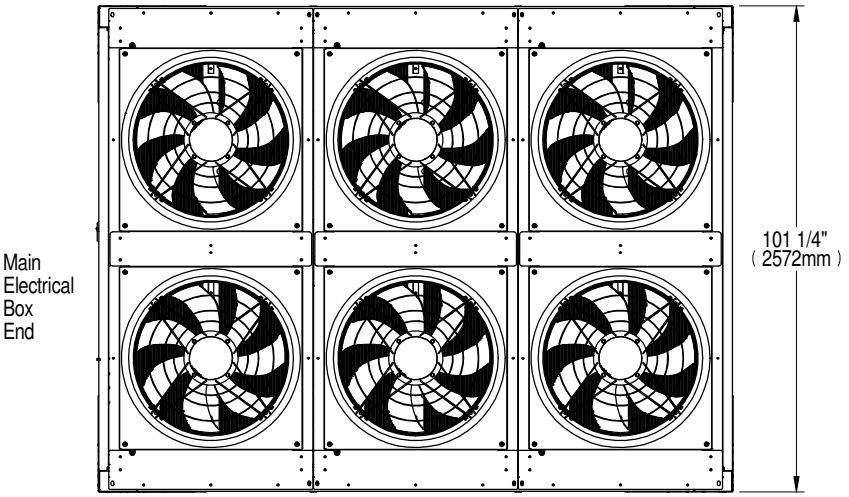

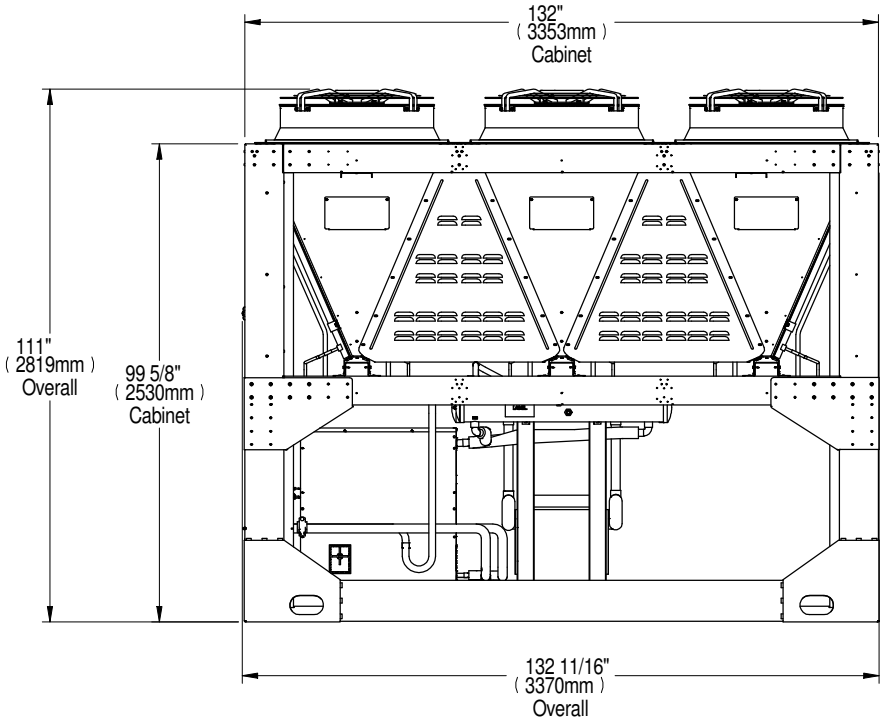

MCV330 ELECTRICAL, INCLUDES PR125:

460 VAC, 3 PH, 60HZ

FLA: 23.8
WSA: 24.7
OPD: 25.0

Model	Shipping weight lb (kg)	Dry weight with a receiver and without crating lb (kg)
MCV330 Single Skid	5000 (2268)	4980 (2258)

NOTES:
1) Minimum clearance on the Main Unit Disconnect Enclosure shall be 48" (1219mm) or per local code.
2) Recommended minimum 48" (1219mm) clearance when multiple skids are mounted side by side to ensure proper airflow. Contact the factory for other spacing requirements.