TLGHF0470RVX02A
ENERGY RECOVERY VENTILATION

Job Name:

System Reference: Date:

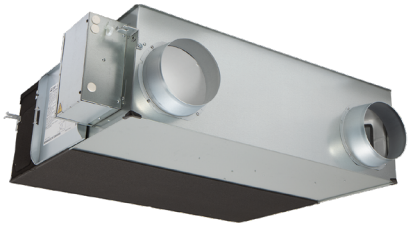

GENERAL FEATURES

- Lossnay® cross-flow energy recovery core
- Minimal cross contamination between entering and leaving air streams
- Stand-alone remote controller (TZ-62DR-EA)
- M-NET Connectivity
- External input bypass damper control
- Stand alone or interlocks connects with all Mitsubishi Electric products
- Four fan speeds
- High efficiency DC Motor
- Standard MERV 7 non-woven fabric filter, washable fiber
- Optional high-efficiency MERV 14 and MERV 16 filters

Specifications			System
Unit Type			TLGHF0470RVX02A
Capacity		CFM [m³/h]	470 [799]
Power source			208/230, 1, 60
Power Consumption		kW	0.22 - 0.425
Current		A	0.047/0.11
Starting Current		A	6.1
MCA		A	5.1
Maximum Overcurrent Protection (MOCP)		A	15
Fan	Air Volume	CFM [m³/h]	118- 235-353-470 [200-399-599-799]
	Type x quantity		9-5/8 In. diameter centrifugal fan
	External Static pressure	in.WG	0.06–0.25–0.56–1.0
	Motor type		EC Motor
Exchange Efficiency	Temperature	%	69-73-77.5-84.5
	Enthalpy Cooling	%	51.0-57.0- 64.0- 72.0
	Enthalpy Heating	%	64.0-69.0-75.0-83.0
External finish			Galvanized steel sheet
External Dimensions		In. [mm]	41-3/8 x 51-5/16 x 15-29/32 [1,051 x 1,302 x 404]
Net weight		Lbs [kg]	110 [50]
Energy Transfer Mechanism			Lossnay® Core
Heat Exchange Material			Partition, spacing plate-cellulose fiber membrane
Heat Exchange System			Air-to-air total heat (sensible heat + latent heat) exchange, no moving parts
Blower Type			9-5/8 In. diameter centrifugal fan
Entering Air Temperature Operation Range		°F [°C]	14 to 104 [-10 to 40]
Sound pressure level		dB(A)	40.0–34.0–26.0–20.0

Specifications are subject to change without notice.

© 2022 Mitsubishi Electric Trane HVAC US LLC. All rights reserved.

ACCESSORIES: TLGHF0470RVX02A

Wired Remote Controller	Lossnay® ERV Remote Controller	☐ TZ-62DR-EA
Control Interface	Signal Output Terminal	☐ PZ-4GS-E
Duct Accessories	Duct Silencer	☐ PZ-250SS-E
Filter	MERV 14 Filter	☐ PZ-80RFP-E
	MERV 16 Filter	☐ PZ-80RFP2-E
	MERV 7 Filter (Included)	☐ PZ-80RF9-E
Remote Sensor	CO2 Sensor, Built-In	☐ PZ-70CSB-E
	CO2 Sensor, Wall Mount	☐ PZ-70CSW-E1

© 2022 Mitsubishi Electric Trane HVAC US LLC. All rights reserved.

DIMENSIONS: TLGHF0470RVX02A

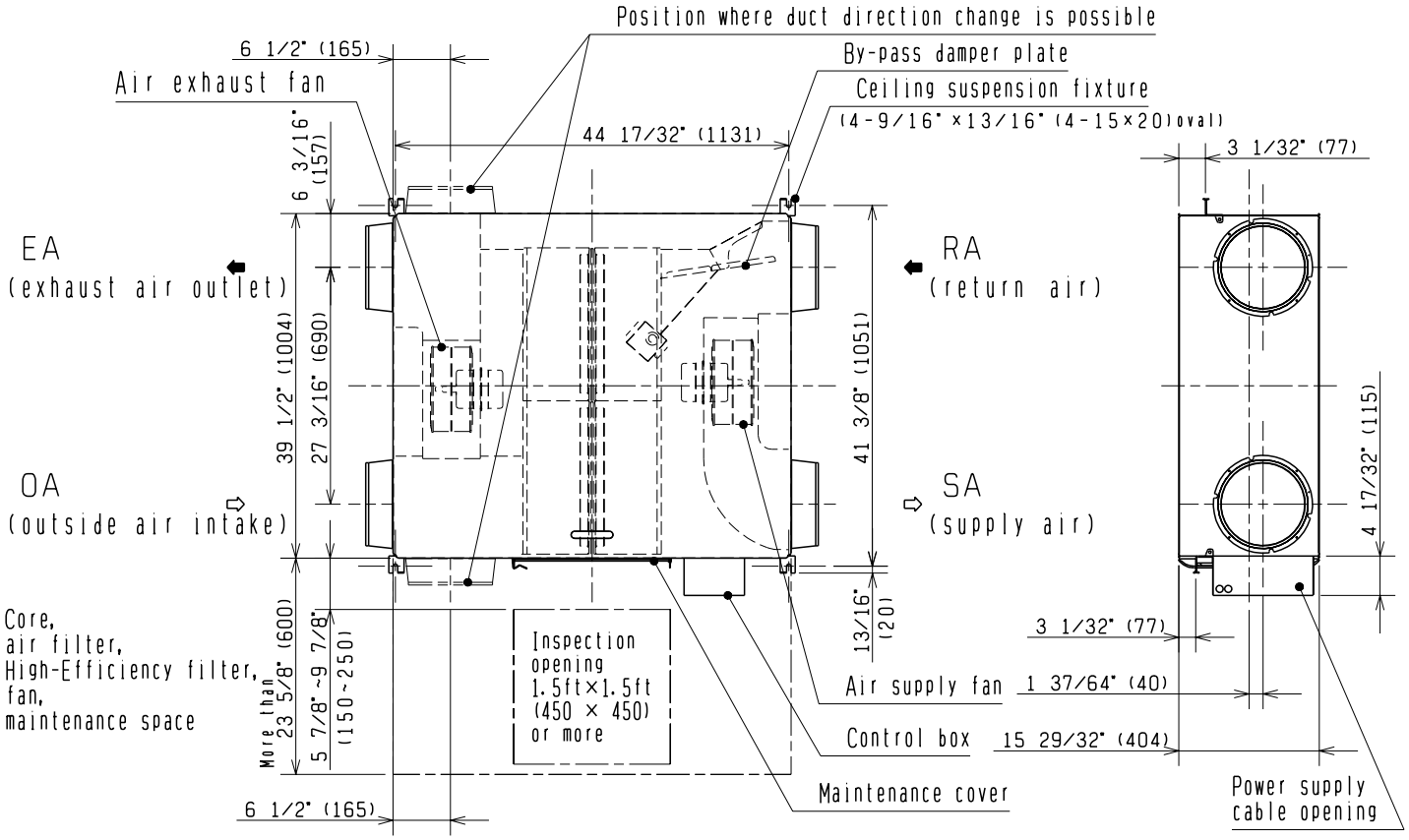

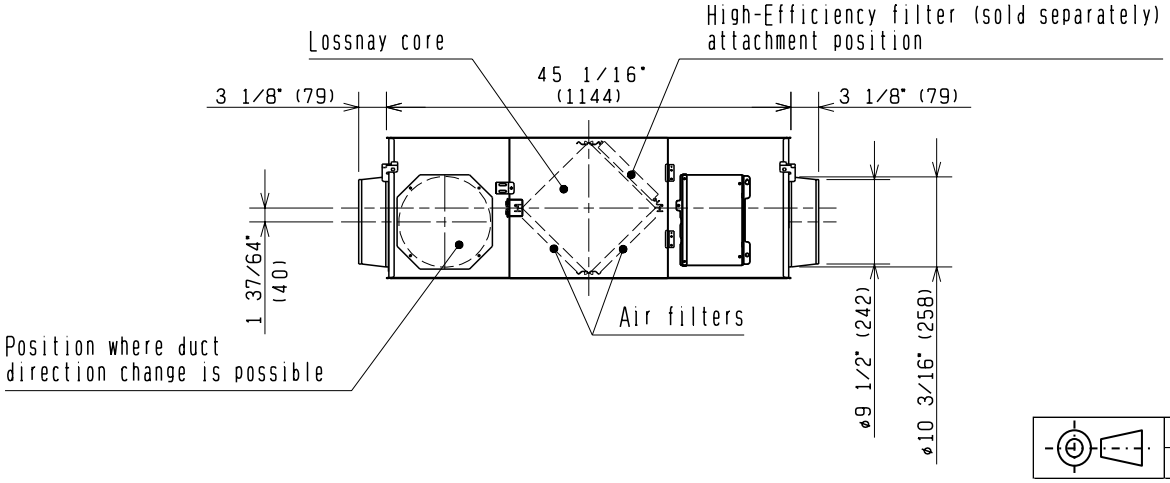

	UNIT	SCALE
	inch(mm)	N.T.S

FORM# TLGHF0470RVX02A - 202206Ver2

Specifications are subject to change without notice.

© 2022 Mitsubishi Electric Trane HVAC US LLC. All rights reserved.