UNIT HEATER 2 | unit heat 3

EGW ECONOMICAL UNIT HEATER

FEATURES

COLOR

- Standard: almond

FINISH

- Standard: epoxy/polyester powder paint

VOLTAGE

- 240/208V, 1-phase

CONSTRUCTION

- 20-gauge steel
- Adjustable louvres to control warm airflow
- High-limit temperature control with automatic reset (first level)

FAN

- 300 cfm fan (51 dBA)
- Totally enclosed factory-lubricated motor

HEATING ELEMENT

- Helical coil nickel-chromium alloy wire provides instant heat

CONTROL

- Built-in thermostat included

INSTALLATION

- Wall or ceiling mounting using the supplied brackets which allow 360° rotation of the heater and prevent it from tipping over

APPLICATION

- Garage, workshop

Built-in thermostat and mounting brackets included.

MODELS

		Size	2	3	5
Heating Capacity	@208/1	Watts	1500	2250	3750
		BTUH	5118	7677	12795
	@240/1	Watts	2000	3000	5000
		BTUH	6824	10236	17060
Ship Weight		Lbs	20	20	20
		Kg	9.1	9.1	9.1

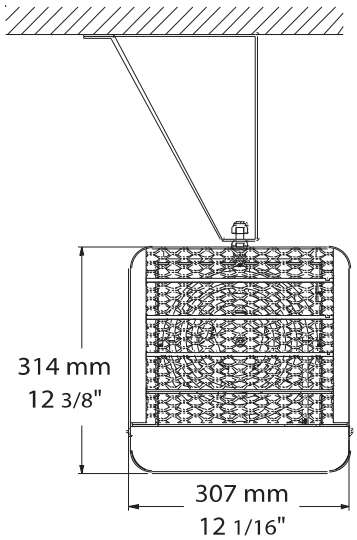

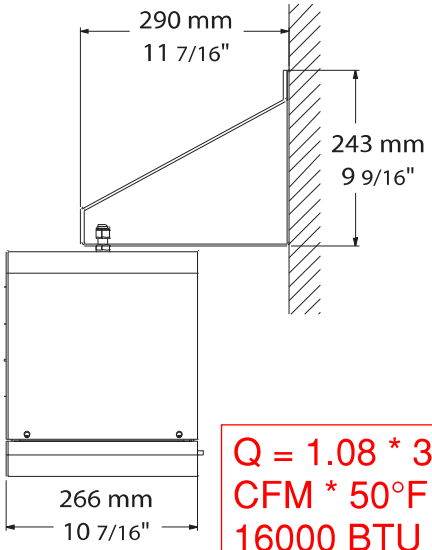

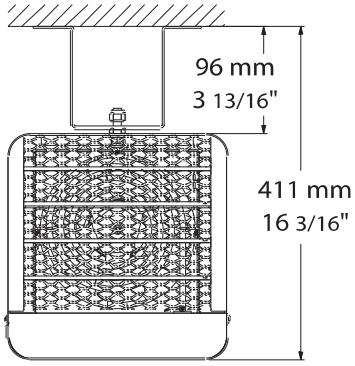

Q = 1.08 * 300 CFM * 50°F ≈ 16000 BTU

UNIT HEAT 1

ECR/ECS CEILING FORCED-AIR DIFFUSER continued

MODELS

			Size	2	3	4	5	7	10
ECS	Ceiling Fan Heater - Forced Air Diffuser, Ceiling Surface Mounted	**Heating Capacity**	**W**	2000	3000	4000	5000	7500	10000
			BTUH	6800	10250	13650	17075	25600	34150
			cfm	310	310	310	310	600	600
		Ship Weight	**Lbs**	25/31	25/31	25/31	25/31	34	34
			Kg	11/14	11/14	11/14	11/14	15	15

			Size	2	3	4	5
ECR	Ceiling Fan Heater - Forced Air Diffuser, Ceiling Recessed Mounted	**Heating Capacity**	**W**	2000	3000	4000	5000
			BTUH	6800	10250	13650	17075
			cfm	310	310	310	310
		Ship Weight	**Lbs**	31	31	31	31
			Kg	14	14	14	14

			2	3	4	5	7	10
Factory Installed Options								
Supply Voltage/Phase	208/1 [6]	**AK2**	✓	✓	✓	✓	✓	✓
	208/3 [6]	**AK5**	✓	✓	✓	✓	✓	✓
	240/1	**AK3E**	✓	✓	✓	✓	✓	✓
	240/3	**AK6E**	✓	✓	✓	✓	✓	✓
	277/1	**AK4**	✓	✓	✓	✓	✓	✓
	347/1	**AK34**	✓	✓	✓	✓	✓	✓
	480/1	**AK9E**	✓	✓	✓	✓	✓	✓
	480/3	**AK7E**	✓	✓	✓	✓	✓	✓
	600/1	**AK10**	✓	✓	✓	✓	✓	✓
	600/3	**AK8E**	✓	✓	✓	✓	✓	✓
Cabinet Color (Lead times may be increased for color other than white)	White	**HK1**	✓	✓	✓	✓	✓	✓
	Almond	**HK2**	✓	✓	✓	✓	✓	✓
Control Voltage	208V. 240V, 277V [1]	**STD**	✓	✓	✓	✓	✓	✓
	24V Relay with Transformer	**BT1**	✓	✓	✓	✓	✓	✓
	120V Control Circuit	**BT2**	✓	✓	✓	✓	✓	✓
Internal Tamper-proof Thermostat		**ICI5**	✓	✓	✓	✓	✓	✓
Disconnect Switch [2]	Up to 277V, 2-Pole, 20A	**BA21**	✓	✓	✓	✓	■	■
	600V, 3-Pole, 40A	**BA14**	✓	✓	✓	✓	✓	✓
	600V, 3-Pole, 80A	**BA15**	✓	✓	✓	✓	✓	✓
Terminals for Remote Fan	Includes Pilot Light	**BB12**	✓	✓	✓	✓	✓	✓
Field Installed Options (shipped separately)								
		Size	**2**	**3**	**4**	**5**	**7**	**10**
Wall Mounted Thermostat	Single-pole, low-voltage [3]	**CL1A**	✓	✓	✓	✓	✓	✓
	Single-pole, single-stage	**CL5**	✓	✓	✓	✓	✓	✓
24V Control Relay Kit [4]	Without transformer	**IR24**	✓	✓	✓	✓	✓	✓
Mounting Accessory [5]	Adapter for T-Bar ceiling (Model ECS only)	**CK20**	✓	✓	✓	✓	■	■

1 208V/240V is standard on all units except 277V/1. Contactors are standard on 3-phase units and single phase units 5 kW and larger or over 300V.
2 For the U.S. only: The nominal current of the unit must not exceed 80% of the capacity of the disconnect.
3 CL1A thermostat requires option BT1
4 IR24: 24V signal by others (multiple units per thermostat).
5 For surface mount Model ECS only. Model ECR lays into T-Bar grid. No adapter is required.
6 ECS10 is rated at 9.9kW at 208V.

REZNOR®