SPECIAL PACKAGING INSTRUCTION

CODE ID	SPI NO. (TPO)
98747	F00-138-3770
	SHEET 1 OF 6

PART OR DRAWING NO.	NATIONAL STOCK NO.	CURRENT REV	ILL. K. KNIGHTON
MULTIPLE PART NUMBERS	1377-00-299-1512 ES	T	P.S. B. GORDER
ITEM NOMENCLATURE		ORIGINAL DATE	CHK. D. HALE
INITIATOR, PROPELLANT ACTUATED		96093	AUTH. J. BURLEIGH

MILITARY PRESERVATION IAW MIL-STD-2073-1

SERVICEABLE METHOD: 41
UNSERVICEABLE METHOD: 41

QUP 001 ▷1
ICQ 000

CLEANING & DRYING: IAW MIL-STD-2073-1
PRESERVATIVE: N/A

MARKING IAW MIL-STD-129

SPECIAL MARKINGS:

A) SPI NO. F00-138-3770
MARK THE SPI NUMBER ON THE IDENTIFICATION SIDE OF CONTAINER.

B) PROPER SHIPPING NAME: CARTRIDGES, POWER DEVICE UN0276

C) UN POP MARKING: (UN) 4G/Y25/S/**
USA/DOD/AF70

**THE LAST TWO DIGITS OF THE YEAR DURING WHICH THE PACKAGING WAS MANUFACTURED.

D) REUSABLE CONTAINER & DUNNAGE DO NOT DESTROY.

NOTE: THE ABOVE POP MARKINGS ARE FOR DOD USE ONLY.

CLOSURE:

LEVEL A: IAW: ASTM D6251
LEVEL B: IAW: THIS INSTRUCTION

PACKING AS SPECIFIED BELOW AND BILL OF MATERIALS

LEVEL	SPEC	STYLE	TYPE	CL	VRTY	GR	TR
A	ASTM D6251	A	III	2			B
B	ASTM D5118	RSC				V3c	

	LEVEL A	LEVEL B
GROSS CU FT	SEE NOTICE 1	1.043
GROSS WT LBS	SEE NOTICE 1	45
DESIGN FRAGILITY G	60	60

	LENGTH	WIDTH	DEPTH
CNTR I.D.			
LEVEL A:	SEE NOTICE 1		
LEVEL B:	10	10	16
CNTR O.D.			
LEVEL A:	SEE NOTICE 1		
LEVEL B:	10 3/8	10 3/8	16 3/4
ITEM DIM	VARIES		
ITEM WT.	VARIES		

REVISIONS		
LTR	DESCRIPTION	DATE
R	ADDED DISTRIBUTION STATEMENT AND REMOVED SHIPPING CONTAINER FROM BOM	18017
T	UPDATED NSN, CUI, CLOSURE AND NOTICES. ADDED CLOSURE DRAWING.	23331

CONTROLLED BY: 406 SCMS
CONTROLLED BY: GULAA-HILL AFB
CONTROLLED BY: CUI/SP-CTI
DISTRIBUTION/DISSEMINATION CONTROL: FEDCON
POC: 406SCMS.GULAA.CONTRACTSHILL@US.AF.MIL

DODPOPHM/USA/DOD/AF70/TR99004

SPI NO. F00-138-3770

SPECIAL PACKAGING INSTRUCTION	CODE ID 98747	SPI NO. (TPO) F00-138-3770
ITEM NOMENCLATURE INITIATOR, PROPELLANT ACTUATED		SHEET 2 OF 6

P/N	QTY REQD	NOMENCLATURE OR DESCRIPTION	SIZE: (INCHES UNLESS SPECIFIED) TOLERANCES ON FRAC. ± 1/8, DECIMAL ± .10, ANGLES ± 1°	MATERIAL SPECIFICATION	
-4	A/R	TAPE	3 X AS REQUIRED	ASTM D5486 TYPE I OR V	
-3	1	WRAP	AS REQUIRED	MIL-PRF-81705 TYPE I, CLASS 1 OR 2	2
-2	1	BARRIER BAG	AS REQUIRED	MIL-DTL-117 TYPE I, CLASS F, STYLE 1	2
-1	A/R	CUSHIONING	AS REQUIRED	A-A-1898 GRADE II	3

SPECIAL PACKAGING INSTRUCTION	CODE ID 98747	SPI NO. (TPO) F00-138-3770
ITEM NOMENCLATURE INITIATOR, PROPELLANT ACTUATED		SHEET 3 OF 6

MUNITION NOTICES

NOTICE 1: FOR LEVEL A PACKING REQUIREMENTS: THE LEVEL B PACKS SHALL BE OVERBOXED IN A LEVEL A SPECIFIED CONTAINER SHOWN ON PAGE 1 UNDER PACKAGING LEVEL A. MARK THE OUTSIDE OF THE OVERBOX "OVERPACK." THE SIZE AND WEIGHT OF THE OVERBOX WILL VARY DEPENDING ON THE NUMBER OF ITEMS BEING SHIPPED. USE FILLER PAD OF ASTM D4727, CF, DOM, GR 275 (OR EQUAL) TO ENSURE A TIGHT FIT IN THE OVERBOX.

NOTICE 2: LEVEL A PROTECTION REQUIRED TO MEET THE MOST SEVERE WORLDWIDE SHIPMENT, HANDLING, AND STORAGE CONDITIONS. EXAMPLES OF SITUATIONS ARE: WAR RESERVE MATERIAL, MOBILIZATION, STRATEGIC AND THEATER DEPLOYMENT, OPEN STORAGE AND DECK LOADING. SECURITY ASSISTANCE ITEMS, INCLUDING FMS, ARE ESPECIALLY SUSCEPTIBLE TO DAMAGE DUE TO UNKNOWN AND UNFAVORABLE TRANSPORTATION, CLIMATIC, AND STORAGE CONDITIONS. PROVIDE LEVEL B PACKING UNLESS OTHERWISE DIRECTED BY THE PROCURING COUNTRY.

NOTICE 3: ASSETS PACKAGED IN ACCORDANCE WITH PREVIOUS EDITIONS OF THIS SPI DO NOT REQUIRE REPACKAGING IF THE INTEGRITY OF THE SPI IS MAINTAINED.

NOTICE 4: SEE SPIRES FOR A COMPLETE LISTING OF NSN's ASSIGNED TO THIS SPI.

NOTICE 6: THIS SPI IS NOT AUTHORIZED FOR USE WITHOUT PROPER HAZARD CLASSIFICATION. UNLESS A FINAL HAZARD CLASSIFICATION HAS BEEN ISSUED, A COPY OF THE VALID INTERIM HAZARD CLASSIFICATION LETTER ALONG WITH DOT SP 15448 MUST ACCOMPANY EACH SHIPMENT.

INTERNATIONAL STANDARDS FOR PHYTOSANITARY MEASURES
REVISION OF ISPM NO. 15
REVISION OF WOOD PACKAGING MATERIAL FOR INTERNATIONAL TRADE

THE FOLLOWING STATEMENT IS IN COMPLIANCE WITH THE UNITED NATIONS-IMPLEMENTED RESTRICTIONS ON WOOD PACKAGING MATERIAL (WPM). THIS REQUIREMENT IS SPECIFICALLY CONCERNED WITH INVASIVE SPECIES SUCH AS THE PINEWOOD NEMATODE. WPM IS DEFINED AS WOOD PALLETS, SKIDS, LOAD BOARDS, PALLET COLLARS, WOODEN BOXES, REELS, DUNNAGE, CRATES, FRAMES, AND CLEATS. THE STATEMENT BELOW CITES THE REQUIREMENTS IN DETAIL AND COVERS LUMBER FOR BUILDING CONTAINERS AND PALLETS USED FOR DELIVERIES, RESULTING IN SHIPMENTS WORLDWIDE (DIRECT, OR THROUGH AIR LOGISTICS CENTERS (ALC), CONTAINER CONSOLIDATION POINTS (CCP), OR OTHER BASES).

WOODEN LUMBER, WOODEN PALLET AND PACKAGING/CONTAINER STATEMENT:

ALL WOODEN LUMBER, WOODEN PALLETS, AND WOODEN CONTAINERS PRODUCED ENTIRELY OR IN PART OF WOOD PACKAGING MATERIAL (WPM) SHALL BE CONSTRUCTED FROM DEBARKED WOOD IN ADDITION TO THE APPLICATION OF HEAT-TREATED (HT) MATERIAL (HT TO 56 DEGREES CENTIGRADE OR 133 DEGREES FAHRENHEIT FOR 30 MINUTES). CERTIFICATION/MARKING IS REQUIRED BY AN ACCREDITED AGENCY RECOGNIZED BY THE AMERICAN LUMBER STANDARDS COMMITTEE (ALSC). FOR REFERENCE DOCUMENTATION, SEE LATEST REVISION OF "INTERNATIONAL STANDARDS FOR PHYTOSANITARY MEASURES (ISPM NO. 15), "REGULATION OF WOOD PACKAGING MATERIAL IN INTERNATIONAL TRADE."

NOTES

1. MAY PLACE UP TO 20 ITEMS IN SHIPPING CONTAINER.

2. WRAP ITEM IN REF.-3, PLACE WRAPPED ITEM IN BARRIER BAG, REF.-2, REMOVE AIR AND SEAL.

3. CUSHION BAG WITH REF.-1, PLACE IN SHIPPING CONTAINER, USING ADDITIONAL CUSHIONING TO PREVENT MOVEMENT AND ENSURE NONE OF THE BAGS CONTACT CONTAINER WALL.

SPECIAL PACKAGING INSTRUCTION	CODE ID 98747	SPI NO. (TPO) F00-138-3770
ITEM NOMENCLATURE INITIATOR, PROPELLANT ACTUATED		SHEET 4 OF 6

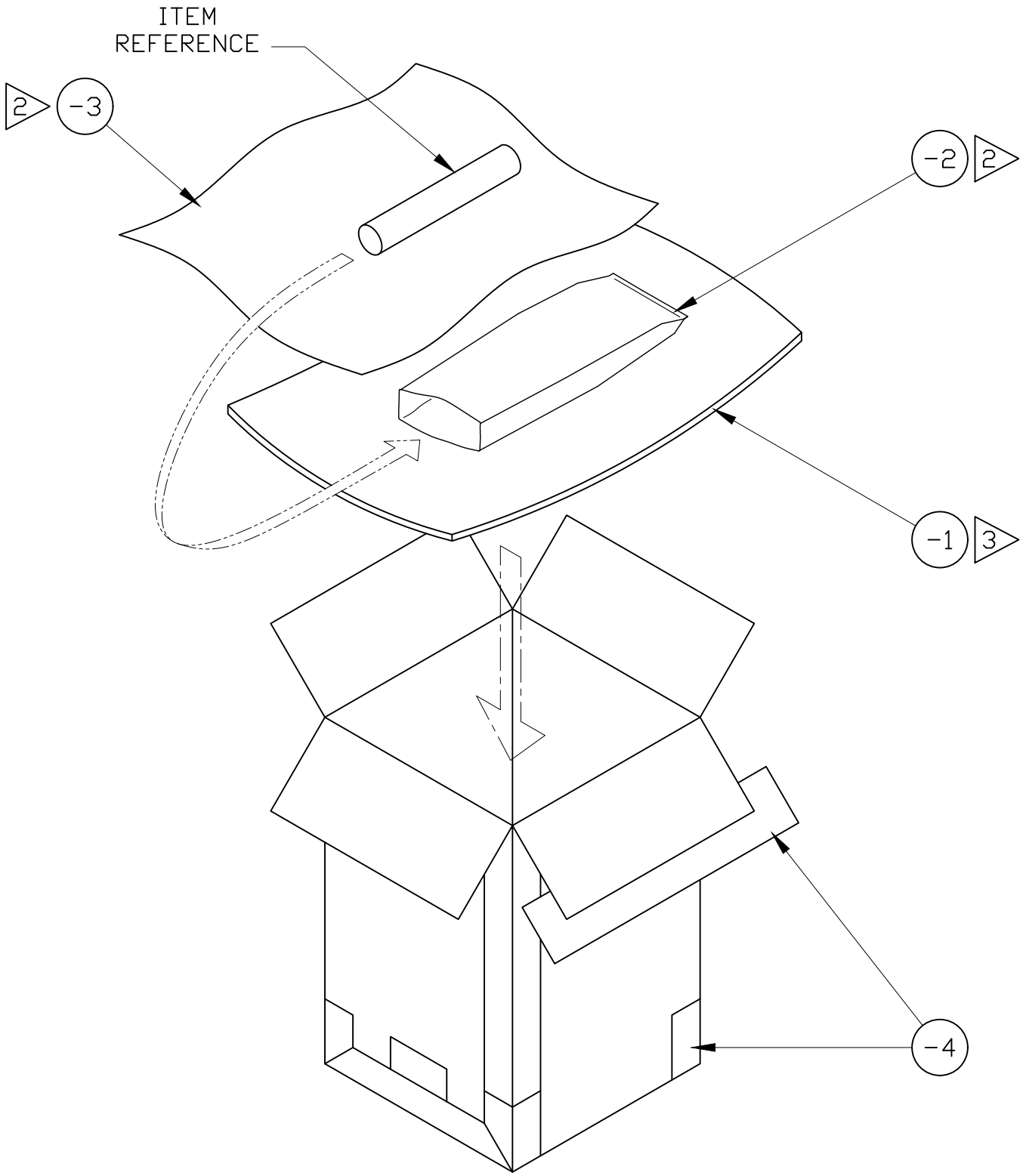

SPECIAL PACKAGING INSTRUCTION	CODE ID 98747	SPI NO. (TPO) F00-138-3770
ITEM NOMENCLATURE INITIATOR, PROPELLANT ACTUATED		SHEET 5 OF 6

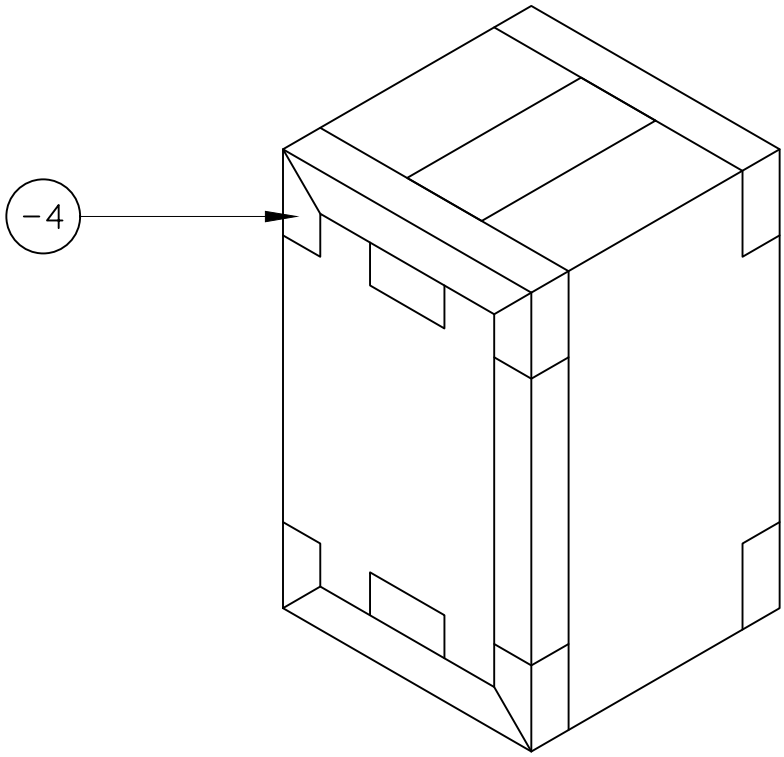

CLOSURE

SPECIAL PACKAGING INSTRUCTION	CODE ID 98747	SPI NO. (TPO) F00-138-3770
ITEM NOMENCLATURE INITIATOR, PROPELLANT ACTUATED		SHEET 6 OF 6

PALLETIZATION PROCEDURE FOR LEVEL B PACK

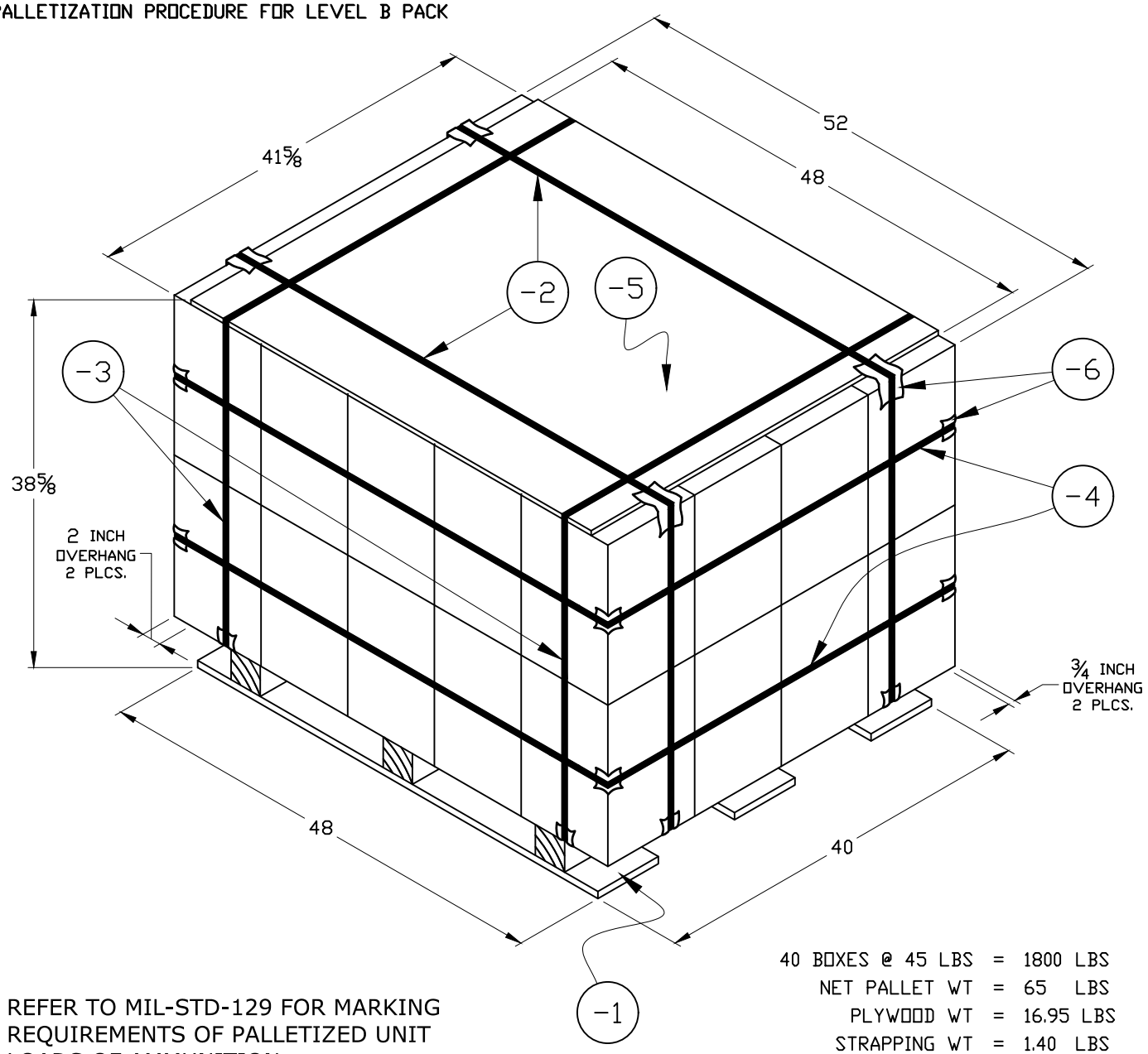

REFER TO MIL-STD-129 FOR MARKING REQUIREMENTS OF PALLETIZED UNIT LOADS OF AMMUNITION.

40 BOXES @ 45 LBS	=	1800 LBS
NET PALLET WT	=	65 LBS
PLYWOOD WT	=	16.95 LBS
STRAPPING WT	=	1.40 LBS
		1883.35 LBS

CUBE OF PALETIZED LOAD = 48.4

P/N	QTY REQD	NOMENCLATURE OR DESCRIPTION	SIZE: (INCHES UNLESS SPECIFIED) TOLERANCES ON FRAC. ± 1/8, DECIMAL ± .10, ANGLES ± 1°	MATERIAL SPECIFICATION
-6	20	EDGE PROTECTORS	AS MANUFACTURED	NSN 8135-00-145-0070 (OR EQUAL)
-5	1	PLYWOOD	48 X 41 5/8 X 3/8	A-A-55057 TYPE A
-4	2	STRAPPING, STEEL & SEALS	3/4 X .015 (MIN) X AS REQUIRED	ASTM D3953 TYPE 1, REG DUTY, FIN B, GRADE 2
-3	2	STRAPPING, STEEL & SEALS	3/4 X .015 (MIN) X AS REQUIRED	ASTM D3953 TYPE 1, REG DUTY, FIN B, GRADE 2
-2	2	STRAPPING, STEEL & SEALS	3/4 X .015 (MIN) X AS REQUIRED	ASTM D3953 TYPE 1, REG DUTY, FIN B, GRADE 2
-1	1	PALLET, 4-WAY ENTRY	40 X 48	MIL-DTL-15011 TYPE I, CLASS 1, STYLE 1

SPECIAL PACKAGING INSTRUCTION

CODE ID	SPI NO. (TPO)	
98747	F01-052-8207	SHEET 1 OF 5

PART OR DRAWING NO.	NATIONAL STOCK NO.	CURRENT REV	ILL. K. KNIGHTON
MULTIPLE PART NUMBERS	1377-01-052-8207 ES	T	P.S. S. OYLER
ITEM NOMENCLATURE		ORIGINAL DATE	CHK. D. HALE
CARTRIDGE, IMPULSE		94082	AUTH. B. TALBOT

DODPOPHM/USA/DOD/AF70/TR90010

MILITARY PRESERVATION IAW MIL-STD-2073-1

SERVICEABLE METHOD: 41
UNSERVICEABLE METHOD: 41

QUP 001 ▷3
ICQ 000

CLEANING & DRYING: IAW MIL-STD-2073-1
PRESERVATIVE: N/A

MARKING IAW MIL-STD-129

SPECIAL MARKINGS:

A) SPI NO. F01-052-8207
MARK THE SPI NUMBER ON THE IDENTIFICATION SIDE OF CONTAINER.

B) PROPER SHIPPING NAME: CARTRIDGES, POWER DEVICE UN0276

C) UN POP MARKING: (UN) 4G/Y15/S/**
USA/DOD/AF70

**THE LAST TWO DIGITS OF THE YEAR DURING WHICH THE PACKAGING WAS MANUFACTURED.

D) REUSABLE CONTAINER & DUNNAGE DO NOT DESTROY.

NOTE: THE ABOVE POP MARKINGS ARE FOR DOD USE ONLY.

CLOSURE:

LEVEL A: IAW: ASTM D6251
LEVEL B: IAW: ASTM D1974 SEALING METHOD C

PACKING AS SPECIFIED BELOW AND BILL OF MATERIALS

LEVEL	SPEC	STYLE	TYPE	CL	VRTY	GR	TR
A	ASTM D6251	A	III	2			B
B	ASTM D5118	RSC				V3c	

	LEVEL A	LEVEL B
GROSS CU FT	SEE NOTICE 1	1.043
GROSS WT LBS	SEE NOTICE 1	28
DESIGN FRAGILITY G	60	60

	LENGTH	WIDTH	DEPTH
CNTR I.D.			
LEVEL A:	SEE NOTICE 1		
LEVEL B:	10	10	16
CNTR O.D.			
LEVEL A:	SEE NOTICE 1		
LEVEL B:	10 3/8	10 3/8	16 3/4
ITEM DIM	VARIES		
ITEM WT.	VARIES		

REVISIONS		
LTR	DESCRIPTION	DATE
R	ADDED DISTRIBUTION STATEMENT AND DESTRUCTION NOTICE AND UPDATED BOM AND ADDED MMAC CODE	18193
T	UPDATED POP MARKING	22244

DISTRIBUTION STATEMENT D: DISTRIBUTION AUTHORIZED TO DEPARTMENT OF DEFENSE AND U.S. DOD CONTRACTORS ONLY, ADMINISTRATIVE OR OPERATIONAL USE, 03 JULY 2018. OTHER REQUESTS FOR THIS DOCUMENT SHALL BE REFERRED TO 406 SCMS/GULAA, (PACKAGING DIVISION), HILL AFB, UTAH 84056.

DESTRUCTION NOTICE: FOLLOW THE PROCEDURES IN DOD 5220.22-M, NATIONAL INDUSTRIAL SECURITY PROGRAM OPERATING MANUAL (NISPOM), SECTION 5-705, OR DOD 5200.1-R, INFORMATION SECURITY PROGRAM, CHAPTER VI. FOR UNCLASSIFIED, LIMITED DOCUMENTS, DESTROY BY ANY METHOD THAT WILL PREVENT DISCLOSURE OF CONTENTS OR RECONSTRUCTION OF THE DOCUMENT.

SPI NO. F01-052-8207

SPECIAL PACKAGING INSTRUCTION	CODE ID 98747	SPI NO. (TPO) F01-052-8207
ITEM NOMENCLATURE CARTRIDGE, IMPULSE		SHEET 2 OF 5

P/N	QTY REQD	NOMENCLATURE OR DESCRIPTION	SIZE: (INCHES UNLESS SPECIFIED) TOLERANCES ON FRAC. ± 1/8, DECIMAL ± .10, ANGLES ± 1°	MATERIAL SPECIFICATION
-4	A/R	TAPE, PACKAGING	3 X AS REQUIRED	ASTM D5486 TYPE I OR V
-3	1	WRAP, CUSHIONING	AS REQUIRED	A-A-59135 CLASS 1, GRADE B 1
-2	1	BAG, BARRIER	AS REQUIRED	MIL-DTL-177 TYPE I, CLASS F, STYLE 1 1
-1	A/R	CUSHIONING	AS REQUIRED	A-A-1898 GRADE II, CLASS B 2

MUNITION NOTICES

NOTICE 1: FOR LEVEL A PACKING REQUIREMENTS: THE LEVEL B PACKS SHALL BE OVERBOXED IN A LEVEL A SPECIFIED CONTAINER SHOWN ON PAGE 1 UNDER PACKAGING LEVEL A. MARK THE OUTSIDE OF THE OVERBOX "OVERPACK." THE SIZE AND WEIGHT OF THE OVERBOX WILL VARY DEPENDING ON THE NUMBER OF ITEMS BEING SHIPPED. USE FILLER PAD OF ASTM-D4727, CF, DOM, GR 275 (OR EQUAL) TO ENSURE A TIGHT FIT IN THE OVERBOX.

NOTICE 2: ASSETS PACKAGED IN ACCORDANCE WITH PREVIOUS EDITIONS OF THIS SPI DO NOT REQUIRE REPACKAGING IF THE INTEGRITY OF THE SPI IS MAINTAINED.

NOTICE 3: SEE SPIRES FOR A COMPLETE LISTING OF NSN's ASSIGNED TO THIS SPI.

NOTICE 4: THIS SPI IS NOT AUTHORIZED FOR USE WITHOUT PROPER HAZARD CLASSIFICATION. UNLESS A FINAL HAZARD CLASSIFICATION HAS BEEN ISSUED, A COPY OF THE VALID INTERIM HAZARD CLASSIFICATION LETTER ALONG WITH DOT SP 15448 MUST ACCOMPANY EACH SHIPMENT.

INTERNATIONAL STANDARDS FOR PHYTOSANITARY MEASURES
REVISION OF ISPM NO. 15
REVISION OF WOOD PACKAGING MATERIAL FOR INTERNATIONAL TRADE

THE FOLLOWING STATEMENT IS IN COMPLIANCE WITH THE UNITED NATIONS-IMPLEMENTED RESTRICTIONS ON WOOD PACKAGING MATERIAL (WPM). THIS REQUIREMENT IS SPECIFICALLY CONCERNED WITH INVASIVE SPECIES SUCH AS THE PINEWOOD NEMATODE. WPM IS DEFINED AS WOOD PALLETS, SKIDS, LOAD BOARDS, PALLET COLLARS, WOODEN BOXES, REELS, DUNNAGE, CRATES, FRAMES, AND CLEATS. THE STATEMENT BELOW CITES THE REQUIREMENTS IN DETAIL AND COVERS LUMBER FOR BUILDING CONTAINERS AND PALLETS USED FOR DELIVERIES, RESULTING IN SHIPMENTS WORLDWIDE (DIRECT, OR THROUGH AIR LOGISTICS CENTERS (ALC), CONTAINER CONSOLIDATION POINTS (CCP), OR OTHER BASES).

WOODEN LUMBER, WOODEN PALLET AND PACKAGING/CONTAINER STATEMENT:

ALL WOODEN LUMBER, WOODEN PALLETS, AND WOODEN CONTAINERS PRODUCED ENTIRELY OR IN PART OF WOOD PACKAGING MATERIAL (WPM) SHALL BE CONSTRUCTED FROM DEBARKED WOOD IN ADDITION TO THE APPLICATION OF HEAT-TREATED (HT) MATERIAL (HT TO 56 DEGREES CENTIGRADE OR 133 DEGREES FAHRENHEIT FOR 30 MINUTES). CERTIFICATION/MARKING IS REQUIRED BY AN ACCREDITED AGENCY RECOGNIZED BY THE AMERICAN LUMBER STANDARDS COMMITTEE (ALSC). FOR REFERENCE DOCUMENTATION, SEE LATEST REVISION OF "INTERNATIONAL STANDARDS FOR PHYTOSANITARY MEASURES (ISPM NO. 15), "REGULATION OF WOOD PACKAGING MATERIAL IN INTERNATIONAL TRADE."

NOTES

1. WRAP ITEM IN REF.-3, PLACE WRAPPED ITEM IN BARRIER BAG, REF.-2, REMOVE AIR AND SEAL.

2. PLACE BAGGED ITEM IN SHIPPING CONTAINER, USE REF.-1 TO KEEP ITEM FROM TOUCHING SIDES OF CONTAINER AND PREVENT MOVEMENT.

3. MAY PLACE UP TO 30 ITEMS IN SHIPPING CONTAINER.

SPECIAL PACKAGING INSTRUCTION	CODE ID 98747	SPI NO. (TPO) F01-052-8207
ITEM NOMENCLATURE CARTRIDGE, IMPULSE		SHEET 4 OF 5

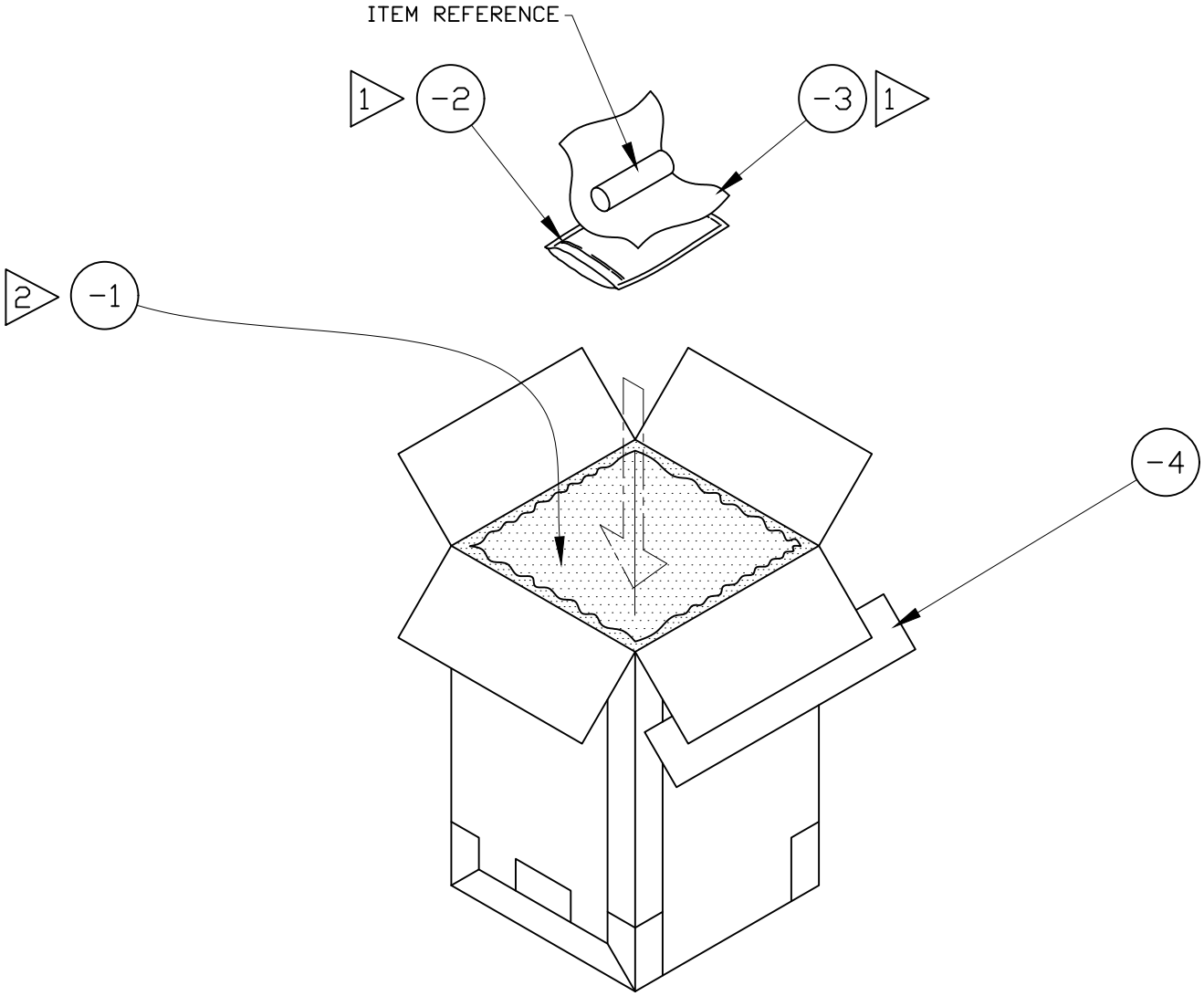

SPECIAL PACKAGING INSTRUCTION	CODE ID 98747	SPI NO. (TPO) F01-052-8207
ITEM NOMENCLATURE CARTRIDGE, IMPULSE		SHEET 5 OF 5

PALLETIZATION PROCEDURE FOR LEVEL B PACK

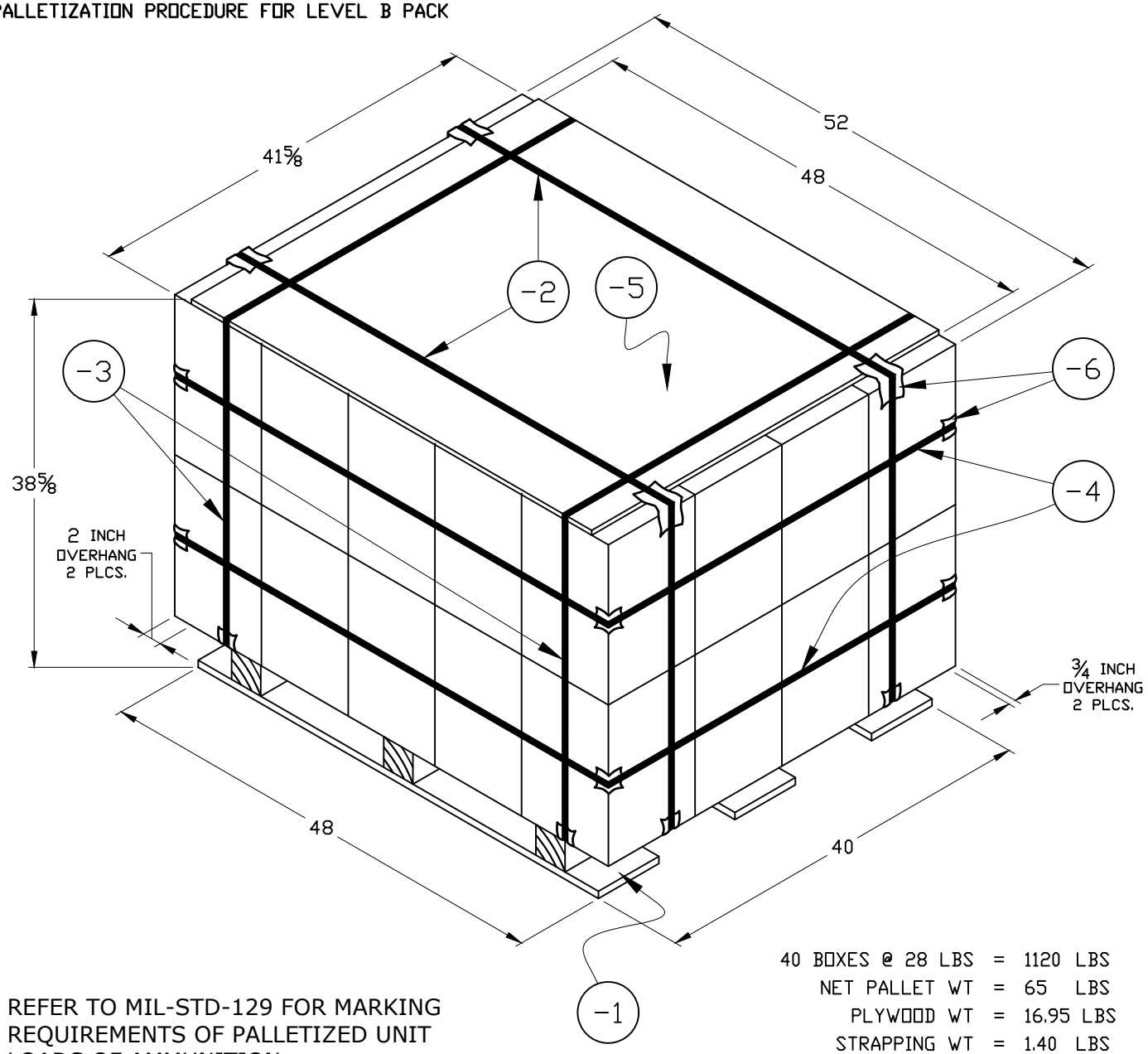

REFER TO MIL-STD-129 FOR MARKING REQUIREMENTS OF PALLETIZED UNIT LOADS OF AMMUNITION.

40 BOXES @ 28 LBS	=	1120 LBS
NET PALLET WT	=	65 LBS
PLYWOOD WT	=	16.95 LBS
STRAPPING WT	=	1.40 LBS
		1203.35 LBS

CUBE OF PALETIZED LOAD = 48.4

P/N	QTY REQD	NOMENCLATURE OR DESCRIPTION	SIZE: (INCHES UNLESS SPECIFIED) TOLERANCES ON FRAC. ± 1/8, DECIMAL ± .10, ANGLES ± 1°	MATERIAL SPECIFICATION
-6	20	EDGE PROTECTORS	AS MANUFACTURED	NSN 8135-00-145-0070 (OR EQUAL)
-5	1	PLYWOOD	48 X 41 5/8 X 3/8	A-A-55057 TYPE A
-4	2	STRAPPING, STEEL	3/4 X .015 X AS REQUIRED	ASTM D3953 TYPE 1, REG DUTY, FIN B, GRADE 2
-3	2	STRAPPING, STEEL	3/4 X .015 X AS REQUIRED	ASTM D3953 TYPE 1, REG DUTY, FIN B, GRADE 2
-2	2	STRAPPING, STEEL	3/4 X .015 X AS REQUIRED	ASTM D3953 TYPE 1, REG DUTY, FIN B, GRADE 2
-1	1	PALLET, 4-WAY ENTRY	40 X 48	MIL-DTL-15011 TYPE I, CLASS 1, STYLE 1

SPECIAL PACKAGING INSTRUCTION

CODE ID	SPI NO. (TPO)
98747	F01-167-6621
	SHEET 1 OF 6

PART OR DRAWING NO.	NATIONAL STOCK NO.	CURRENT REV	
MULTIPLE PART NUMBERS	1377-01-167-6621 ES	C	ILL. K. KNIGHTON P.S. S. OYLER
ITEM NOMENCLATURE		ORIGINAL DATE	CHK. D. HALE
INITIATOR, PROPELLANT ACTUATED		14233	AUTH. J. BURLEIGH

DODPOPHM/USA/DOD/AF70/TR14001

MILITARY PRESERVATION IAW MIL-STD-2073-1

SERVICEABLE METHOD: 41
UNSERVICEABLE METHOD: 41
QUP 001 ▷1
ICQ 000
CLEANING & DRYING: IAW MIL-STD-2073-1
PRESERVATIVE: N/A

MARKING IAW MIL-STD-129

SPECIAL MARKINGS:

A) SPI NO. F01-167-6621
MARK THE SPI NUMBER ON THE IDENTIFICATION SIDE OF CONTAINER.

B) PROPER SHIPPING NAME: CARTRIDGES, POWER DEVICE UN0276

C) UN POP MARKING: (UN) 4G/Y15/S/**
USA/DOD/AF70

**THE LAST TWO DIGITS OF THE YEAR DURING WHICH THE PACKAGING WAS MANUFACTURED.

D) REUSABLE CONTAINER & DUNNAGE DO NOT DESTROY.

NOTE: THE ABOVE POP MARKINGS ARE FOR DOD USE ONLY.

CLOSURE:

LEVEL A: IAW: ASTM D6251
LEVEL B: IAW: THIS INSTRUCTION

PACKING AS SPECIFIED BELOW AND BILL OF MATERIALS

LEVEL	SPEC	STYLE	TYPE	CL	VRTY	GR	TR
A	ASTM D6251	A	III	2			B
B	ASTM D5118	RSC				V3c	

	LEVEL A	LEVEL B
GROSS CU FT	SEE NOTICE 1	1.043
GROSS WT LBS	SEE NOTICE 1	25
DESIGN FRAGILITY G	60	60

	LENGTH	WIDTH	DEPTH
CNTR I.D.			
LEVEL A:	SEE NOTICE 1		
LEVEL B:	10	10	16
CNTR O.D.			
LEVEL A:	SEE NOTICE 1		
LEVEL B:	10 3/8	10 3/8	16 3/4
ITEM DIM	VARIES		
ITEM WT.	VARIES		

REVISIONS		
LTR	DESCRIPTION	DATE
A	ADD DISTRIBUTION STATEMENT, DESTRUCTION NOTICE AND CHANGED BOM	18094
B	UPDATED POP MARKING	22118
C	UPDATED LEVEL B CLOSURE AND NOTICES, ADDED CLOSURE DRAWING	23317

CONTROLLED BY: 406 SCMS
CONTROLLED BY: GULAA-HILL AFB
CONTROLLED BY: CUI/SP-CTI
DISTRIBUTION/DISSEMINATION CONTROL: FEDCON
POC: 406SCMS.GULAA.CONTRACTSHILL@US.AF.MIL

SPI NO. F01-167-6621

SPECIAL PACKAGING INSTRUCTION	CODE ID 98747	SPI NO. (TPO) F01-167-6621
ITEM NOMENCLATURE INITIATOR, PROPELLANT ACTUATED		SHEET 2 OF 6

P/N	QTY REQD	NOMENCLATURE OR DESCRIPTION	SIZE: (INCHES UNLESS SPECIFIED) TOLERANCES ON FRAC. ± ⅛, DECIMAL ± .10, ANGLES ± 1°	MATERIAL SPECIFICATION	
-4	A/R	TAPE, PACKAGING	3 X AS REQUIRED	ASTM D5486 TYPE I OR V	
-3	A/R	WRAP	AS REQUIRED	MIL-PRF-81705 TYPE I, CLASS 1	2
-2	1	BARRIER BAG	AS REQUIRED	MIL-DTL-117 TYPE I, CLASS F, STYLE 1	2
-1	A/R	CUSHIONING	AS REQUIRED	A-A-1898 GRADE II, CLASS B	1

SPECIAL PACKAGING INSTRUCTION	CODE ID 98747	SPI NO. (TPO) F01-167-6621
ITEM NOMENCLATURE INITIATOR, PROPELLANT ACTUATED		SHEET 3 OF 6

MUNITION NOTICES

NOTICE 1: FOR LEVEL A PACKING REQUIREMENTS: THE LEVEL B PACKS SHALL BE OVERBOXED IN A LEVEL A SPECIFIED CONTAINER SHOWN ON PAGE 1 UNDER PACKAGING LEVEL A. MARK THE OUTSIDE OF THE OVERBOX "OVERPACK." THE SIZE AND WEIGHT OF THE OVERBOX WILL VARY DEPENDING ON THE NUMBER OF ITEMS BEING SHIPPED. USE FILLER PAD OF ASTM D4727, CF, DOM, GR 275 (OR EQUAL) TO ENSURE A TIGHT FIT IN THE OVERBOX.

NOTICE 2: LEVEL A PROTECTION REQUIRED TO MEET THE MOST SEVERE WORLDWIDE SHIPMENT, HANDLING, AND STORAGE CONDITIONS. EXAMPLES OF SITUATIONS ARE: WAR RESERVE MATERIAL, MOBILIZATION, STRATEGIC AND THEATER DEPLOYMENT, OPEN STORAGE AND DECK LOADING. SECURITY ASSISTANCE ITEMS, INCLUDING FMS, ARE ESPECIALLY SUSCEPTIBLE TO DAMAGE DUE TO UNKNOWN AND UNFAVORABLE TRANSPORTATION, CLIMATIC, AND STORAGE CONDITIONS. PROVIDE LEVEL B PACKING UNLESS OTHERWISE DIRECTED BY THE PROCURING COUNTRY.

NOTICE 3: ASSETS PACKAGED IN ACCORDANCE WITH PREVIOUS EDITIONS OF THIS SPI DO NOT REQUIRE REPACKAGING IF THE INTEGRITY OF THE SPI IS MAINTAINED.

NOTICE 4: SEE SPIRES FOR A COMPLETE LISTING OF NSN's ASSIGNED TO THIS SPI.

NOTICE 5: THIS SPI IS NOT AUTHORIZED FOR USE WITHOUT PROPER HAZARD CLASSIFICATION. UNLESS A FINAL HAZARD CLASSIFICATION HAS BEEN ISSUED, A COPY OF THE VALID INTERIM HAZARD CLASSIFICATION LETTER ALONG WITH DOT SP 15448 MUST ACCOMPANY EACH SHIPMENT.

INTERNATIONAL STANDARDS FOR PHYTOSANITARY MEASURES
REVISION OF ISPM NO. 15
REVISION OF WOOD PACKAGING MATERIAL FOR INTERNATIONAL TRADE

THE FOLLOWING STATEMENT IS IN COMPLIANCE WITH THE UNITED NATIONS-IMPLEMENTED RESTRICTIONS ON WOOD PACKAGING MATERIAL (WPM). THIS REQUIREMENT IS SPECIFICALLY CONCERNED WITH INVASIVE SPECIES SUCH AS THE PINEWOOD NEMATODE. WPM IS DEFINED AS WOOD PALLETS, SKIDS, LOAD BOARDS, PALLET COLLARS, WOODEN BOXES, REELS, DUNNAGE, CRATES, FRAMES, AND CLEATS. THE STATEMENT BELOW CITES THE REQUIREMENTS IN DETAIL AND COVERS LUMBER FOR BUILDING CONTAINERS AND PALLETS USED FOR DELIVERIES, RESULTING IN SHIPMENTS WORLDWIDE (DIRECT, OR THROUGH AIR LOGISTICS CENTERS (ALC), CONTAINER CONSOLIDATION POINTS (CCP), OR OTHER BASES).

WOODEN LUMBER, WOODEN PALLET AND PACKAGING/CONTAINER STATEMENT:

ALL WOODEN LUMBER, WOODEN PALLETS, AND WOODEN CONTAINERS PRODUCED ENTIRELY OR IN PART OF WOOD PACKAGING MATERIAL (WPM) SHALL BE CONSTRUCTED FROM DEBARKED WOOD IN ADDITION TO THE APPLICATION OF HEAT-TREATED (HT) MATERIAL (HT TO 56 DEGREES CENTIGRADE OR 133 DEGREES FAHRENHEIT FOR 30 MINUTES). CERTIFICATION/MARKING IS REQUIRED BY AN ACCREDITED AGENCY RECOGNIZED BY THE AMERICAN LUMBER STANDARDS COMMITTEE (ALSC). FOR REFERENCE DOCUMENTATION, SEE LATEST REVISION OF "INTERNATIONAL STANDARDS FOR PHYTOSANITARY MEASURES (ISPM NO. 15), "REGULATION OF WOOD PACKAGING MATERIAL IN INTERNATIONAL TRADE."

NOTES

1. MAY PLACE UP TO 10 BAGGED ITEMS IN SHIPPING CONTAINER USING REF.-1 TO ENSURE THAT ITEMS DO NOT TOUCH EACH OTHER OR SIDES OF OUTER CONTAINER.

2. WRAP ITEM USING REF.-3, PLACE IN BAG REF.-2 REMOVE AIR AND SEAL.

SPECIAL PACKAGING INSTRUCTION	CODE ID 98747	SPI NO. (TPO) F01-167-6621
ITEM NOMENCLATURE INITIATOR, PROPELLANT ACTUATED		SHEET 4 OF 6

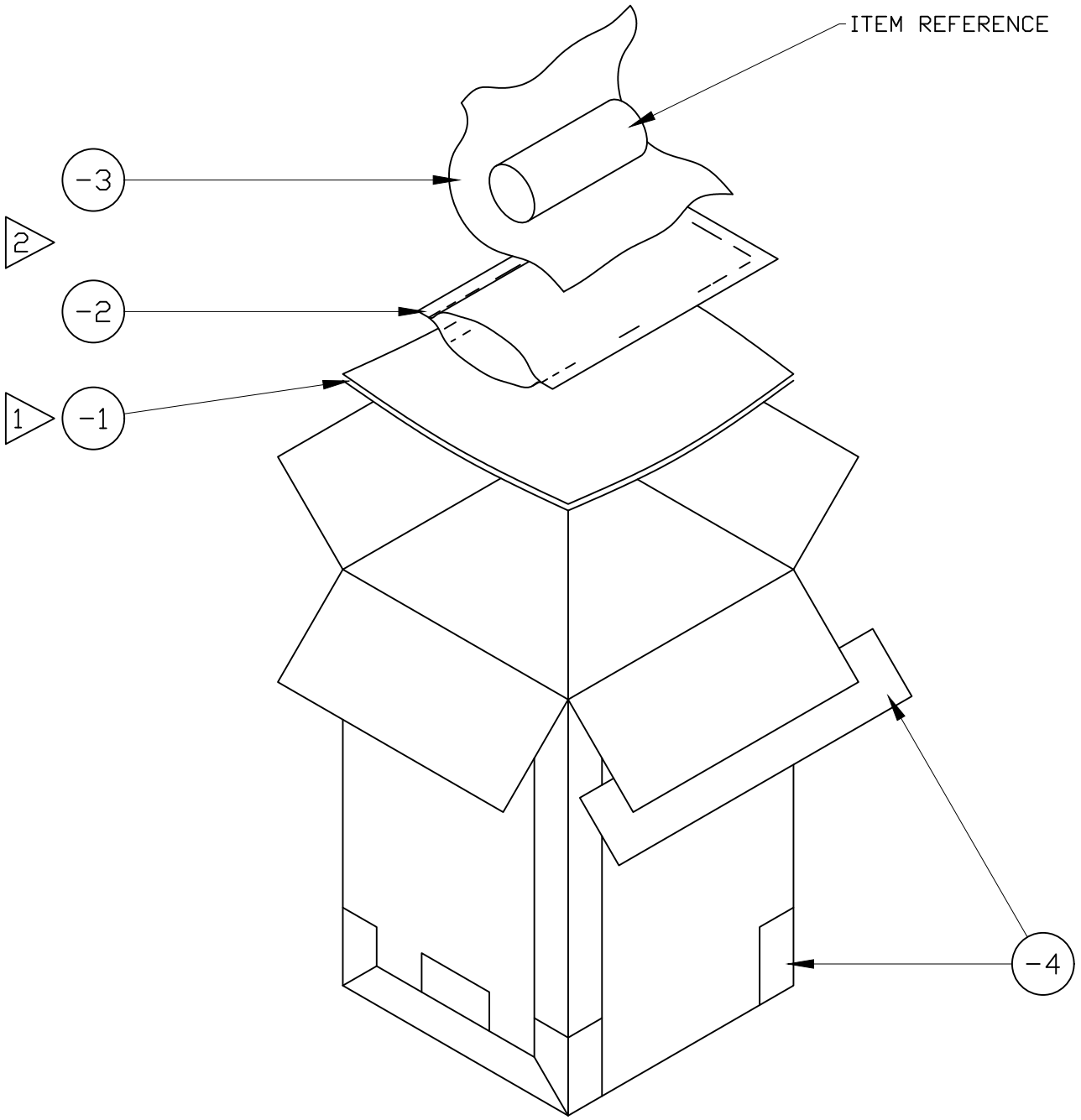

SPECIAL PACKAGING INSTRUCTION	CODE ID 98747	SPI NO. (TPO) F01-167-6621
ITEM NOMENCLATURE INITIATOR, PROPELLANT ACTUATED		SHEET 5 OF 6

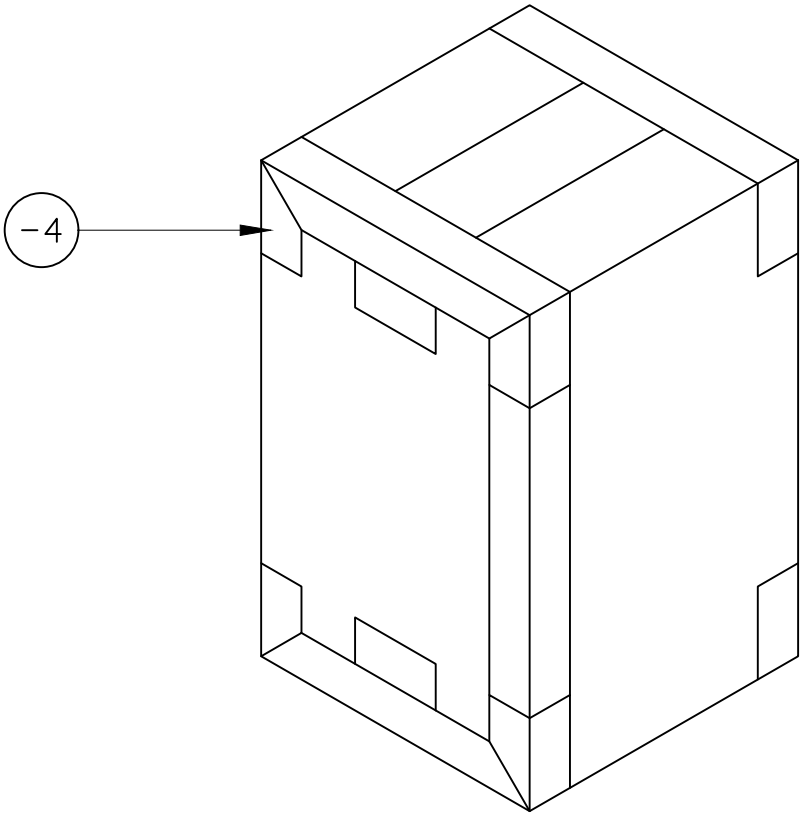

CLOSURE

SPECIAL PACKAGING INSTRUCTION	CODE ID 98747	SPI NO. (TPO) F01-167-6621
ITEM NOMENCLATURE INITIATOR, PROPELLANT ACTUATED		SHEET 6 OF 6

PALLETIZATION PROCEDURE FOR LEVEL B PACK

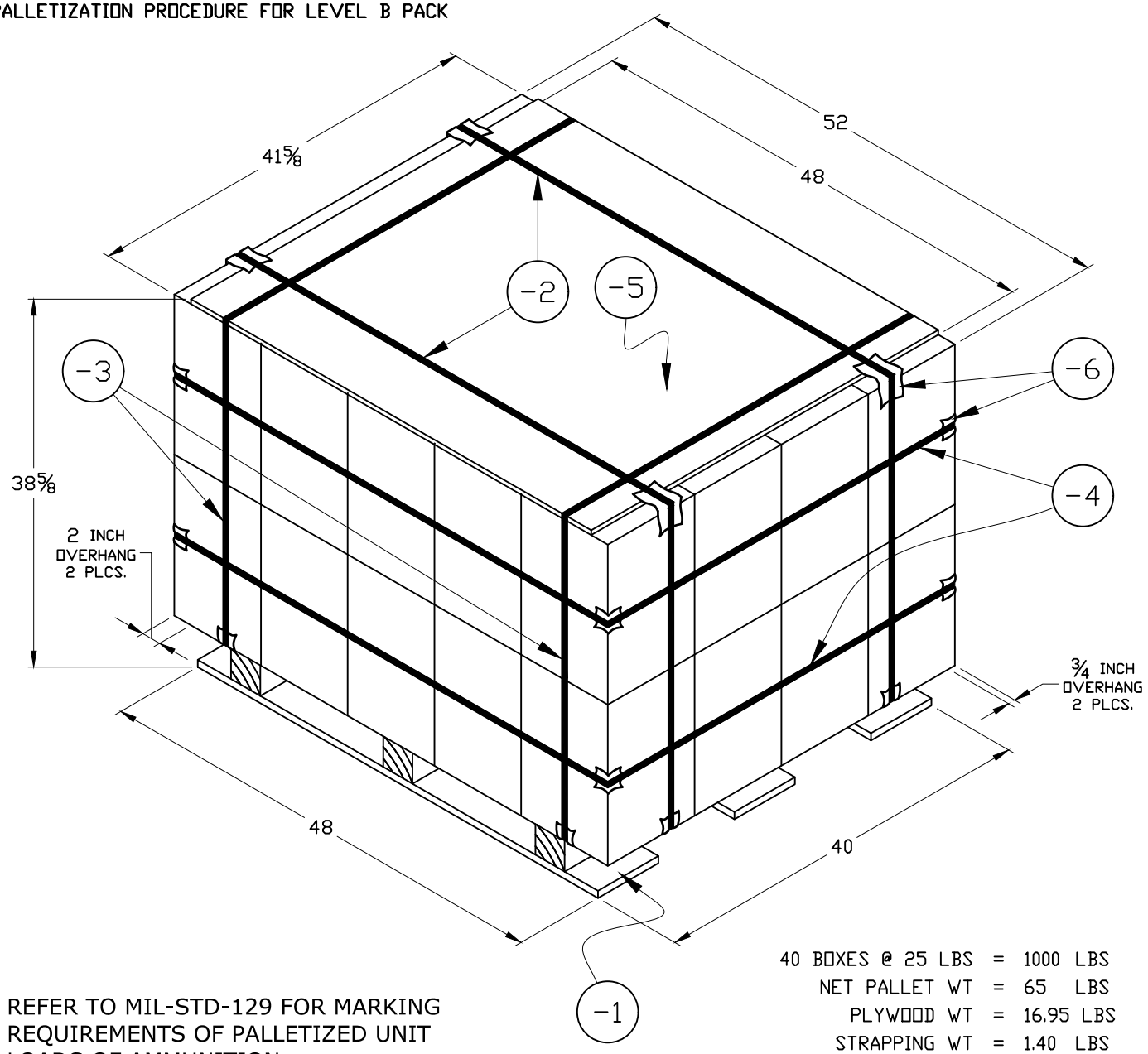

REFER TO MIL-STD-129 FOR MARKING REQUIREMENTS OF PALLETIZED UNIT LOADS OF AMMUNITION.

40 BOXES @ 25 LBS	=	1000 LBS
NET PALLET WT	=	65 LBS
PLYWOOD WT	=	16.95 LBS
STRAPPING WT	=	1.40 LBS
		1083.35 LBS

CUBE OF PALETIZED LOAD = 48.4

P/N	QTY REQD	NOMENCLATURE OR DESCRIPTION	SIZE: (INCHES UNLESS SPECIFIED) TOLERANCES ON FRAC. ± 1/8, DECIMAL ± .10, ANGLES ± 1°	MATERIAL SPECIFICATION
-6	20	EDGE PROTECTORS	AS MANUFACTURED	NSN 8135-00-145-0070 (OR EQUAL)
-5	1	PLYWOOD	48 X 41 5/8 X 3/8	A-A-55057 TYPE A
-4	2	STRAPPING, STEEL	3/4 X .015 (MIN) X AS REQUIRED	ASTM D3953 TYPE 1, RD, FINISH B, GRADE 2
-3	2	STRAPPING, STEEL	3/4 X .015 (MIN) X AS REQUIRED	ASTM D3953 TYPE 1, RD, FINISH B, GRADE 2
-2	2	STRAPPING, STEEL	3/4 X .015 (MIN) X AS REQUIRED	ASTM D3953 TYPE 1, RD, FINISH B, GRADE 2
-1	1	PALLET, 4-WAY ENTRY	40 X 48	MIL-DTL-15011 TYPE I, CLASS 1, STYLE 1

SPECIAL PACKAGING INSTRUCTION

CODE ID	SPI NO. (TPO)
98747	F01-237-4417
	SHEET 1 OF 6

PART OR DRAWING NO.	NATIONAL STOCK NO.	CURRENT REV	
MULTIPLE PART NUMBERS	1377-01-237-4417 ES	J	ILL. K. KNIGHTON P.S. S. PEELER
ITEM NOMENCLATURE		ORIGINAL DATE	CHK. D. HALE
SELECTOR, MODE		96327	AUTH. J. BURLEIGH

DODPOPHM/USA/DOD/AF70/TR14019

MILITARY PRESERVATION IAW MIL-STD-2073-1

SERVICEABLE METHOD: 41
UNSERVICEABLE METHOD: 41

QUP 001 ▷2
ICQ 000

CLEANING & DRYING: IAW MIL-STD-2073-1
PRESERVATIVE: N/A

MARKING IAW MIL-STD-129

SPECIAL MARKINGS:

A) SPI NO. F01-237-4417
MARK THE SPI NUMBER ON THE IDENTIFICATION SIDE OF CONTAINER.

B) PROPER SHIPPING NAME: RELEASE DEVICES, EXPLOSIVE UN0173

C) UN POP MARKING: UN 4G/Y20/S/**
USA/DOD/AF70

**THE LAST TWO DIGITS OF THE YEAR DURING WHICH THE PACKAGING WAS MANUFACTURED.

D) REUSABLE CONTAINER & DUNNAGE DO NOT DESTROY.

NOTE: THE ABOVE POP MARKINGS ARE FOR DOD USE ONLY.

CLOSURE:

LEVEL A: IAW: ASTM D6251
LEVEL B: IAW: THIS INSTRUCTION

PACKING AS SPECIFIED BELOW AND BILL OF MATERIALS

LEVEL	SPEC	STYLE	TYPE	CL	VRTY	GR	TR
A	ASTM D6251	A	III	2			B
B	ASTM D5118	RSC				V3c	

	LEVEL A	LEVEL B
GROSS CU FT	SEE NOTICE 1	1.043
GROSS WT LBS	SEE NOTICE 1	35
DESIGN FRAGILITY G	80	80

	LENGTH	WIDTH	DEPTH
CNTR I.D.			
LEVEL A:	SEE NOTICE 1		
LEVEL B:	10	10	16
CNTR O.D.			
LEVEL A:	SEE NOTICE 1		
LEVEL B:	10 3/8	10 3/8	16 3/4
ITEM DIM	VARIES		
ITEM WT.	VARIES		

REVISIONS		
LTR	DESCRIPTION	DATE
J	LOWERED POP MARKING, UPDATED PALLETIZATION BOM, AND FORMAT	23346

SPI NO. F01-237-4417

CONTROLLED BY: 406 SCMS
CONTROLLED BY: GULAA-HILL AFB
CONTROLLED BY: CUI/SP-CTI
DISTRIBUTION/DISSEMINATION CONTROL: FEDCON
POC: 406SCMS.GULAA.CONTRACTSHILL@US.AF.MIL

SPECIAL PACKAGING INSTRUCTION	CODE ID 98747	SPI NO. (TPO) F01-237-4417
ITEM NOMENCLATURE SELECTOR, MODE		SHEET 2 OF 6

P/N	QTY REQD	NOMENCLATURE OR DESCRIPTION	SIZE: (INCHES UNLESS SPECIFIED) TOLERANCES ON FRAC. ± ⅛, DECIMAL ± .10, ANGLES ± 1°	MATERIAL SPECIFICATION	
-4	A/R	TAPE	3 X AS REQUIRED	ASTM D5486 TYPE I OR V	3
-3	A/R	WRAP	AS REQUIRED	A-A-59135 CLASS 1, GRADE B	1
-2	1	BARRIER BAG	AS REQUIRED	MIL-DTL-117 TYPE I, CLASS F, STYLE 1	2
-1	A/R	CUSHIONING	AS REQUIRED	A-A-1898 GRADE II, CLASS B OR EQUAL	2

SPECIAL PACKAGING INSTRUCTION	CODE ID 98747	SPI NO. (TPO) F01-237-4417
ITEM NOMENCLATURE SELECTOR, MODE		SHEET 3 OF 6

MUNITION NOTICES

NOTICE 1: FOR LEVEL A PACKING REQUIREMENTS: THE LEVEL B PACKS SHALL BE OVERBOXED IN A LEVEL A SPECIFIED CONTAINER SHOWN ON PAGE 1 UNDER PACKAGING LEVEL A. MARK THE OUTSIDE OF THE OVERBOX "OVERPACK." THE SIZE AND WEIGHT OF THE OVERBOX WILL VARY DEPENDING ON THE NUMBER OF ITEMS BEING SHIPPED. USE FILLER PAD OF ASTM D4727, CF, DOM, GR 275 (OR EQUAL) TO ENSURE A TIGHT FIT IN THE OVERBOX.

NOTICE 2: ASSETS PACKAGED IN ACCORDANCE WITH PREVIOUS EDITIONS OF THIS SPI DO NOT REQUIRE REPACKAGING IF THE INTEGRITY OF THE SPI IS MAINTAINED.

NOTICE 3: SEE SPIRES FOR A COMPLETE LISTING OF NSN's ASSIGNED TO THIS SPI.

NOTICE 4: THIS SPI IS NOT AUTHORIZED FOR USE WITHOUT PROPER HAZARD CLASSIFICATION. UNLESS A FINAL HAZARD CLASSIFICATION HAS BEEN ISSUED, A COPY OF THE VALID INTERIM HAZARD CLASSIFICATION LETTER ALONG WITH DOT SP 15448 MUST ACCOMPANY EACH SHIPMENT.

NOTICE 5: LEVEL A PROTECTION REQUIRED TO MEET THE MOST SEVERE WORLDWIDE SHIPMENT, HANDLING, AND STORAGE CONDITIONS. EXAMPLES OF SITUATIONS ARE: WAR RESERVE MATERIAL, MOBILIZATION, STRATEGIC AND THEATER DEPLOYMENT, OPEN STORAGE AND DECK LOADING. SECURITY ASSISTANCE ITEMS, INCLUDING FMS, ARE ESPECIALLY SUSCEPTIBLE TO DAMAGE DUE TO UNKNOWN AND UNFAVORABLE TRANSPORTATION, CLIMATIC, AND STORAGE CONDITIONS. PROVIDE LEVEL B PACKING UNLESS OTHERWISE DIRECTED BY THE PROCURING COUNTRY.

INTERNATIONAL STANDARDS FOR PHYTOSANITARY MEASURES
REVISION OF ISPM NO. 15
REVISION OF WOOD PACKAGING MATERIAL FOR INTERNATIONAL TRADE

THE FOLLOWING STATEMENT IS IN COMPLIANCE WITH THE UNITED NATIONS-IMPLEMENTED RESTRICTIONS ON WOOD PACKAGING MATERIAL (WPM). THIS REQUIREMENT IS SPECIFICALLY CONCERNED WITH INVASIVE SPECIES SUCH AS THE PINEWOOD NEMATODE. WPM IS DEFINED AS WOOD PALLETS, SKIDS, LOAD BOARDS, PALLET COLLARS, WOODEN BOXES, REELS, DUNNAGE, CRATES, FRAMES, AND CLEATS. THE STATEMENT BELOW CITES THE REQUIREMENTS IN DETAIL AND COVERS LUMBER FOR BUILDING CONTAINERS AND PALLETS USED FOR DELIVERIES, RESULTING IN SHIPMENTS WORLDWIDE (DIRECT, OR THROUGH AIR LOGISTICS CENTERS (ALC), CONTAINER CONSOLIDATION POINTS (CCP), OR OTHER BASES).

WOODEN LUMBER, WOODEN PALLET AND PACKAGING/CONTAINER STATEMENT:

ALL WOODEN LUMBER, WOODEN PALLETS, AND WOODEN CONTAINERS PRODUCED ENTIRELY OR IN PART OF WOOD PACKAGING MATERIAL (WPM) SHALL BE CONSTRUCTED FROM DEBARKED WOOD IN ADDITION TO THE APPLICATION OF HEAT-TREATED (HT) MATERIAL (HT TO 56 DEGREES CENTIGRADE OR 133 DEGREES FAHRENHEIT FOR 30 MINUTES). CERTIFICATION/MARKING IS REQUIRED BY AN ACCREDITED AGENCY RECOGNIZED BY THE AMERICAN LUMBER STANDARDS COMMITTEE (ALSC). FOR REFERENCE DOCUMENTATION, SEE LATEST REVISION OF "INTERNATIONAL STANDARDS FOR PHYTOSANITARY MEASURES (ISPM NO. 15), "REGULATION OF WOOD PACKAGING MATERIAL IN INTERNATIONAL TRADE."

NOTES

1. WRAP EACH ITEM IN CUSHIONING, REF.-3, PLACE IN BAG, REF.-2, REMOVE AIR AND SEAL.
2. PLACE UP TO 12 ITEMS IN SHIPPING CONTAINER, ADD CUSHIONING REF.-1 AS REQUIRED TO ENSURE SNUG FIT AND TO PREVENT ITEMS FROM CONTACTING SIDES.
3. CLOSE AND TAPE CONTAINER WITH REF.-4.

SPECIAL PACKAGING INSTRUCTION	CODE ID 98747	SPI NO. (TPO) F01-237-4417
ITEM NOMENCLATURE SELECTOR, MODE		SHEET 4 OF 6

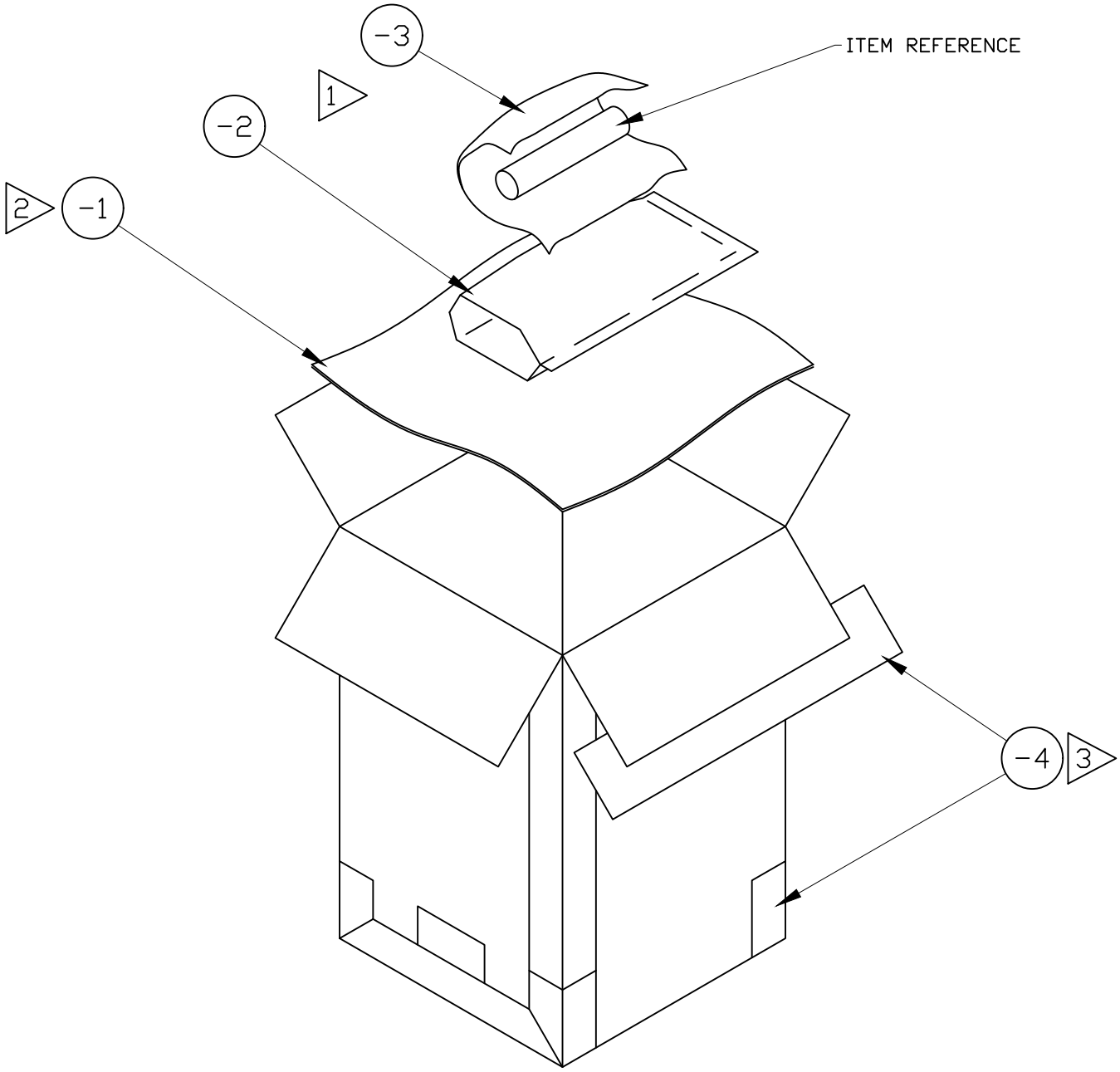

SPECIAL PACKAGING INSTRUCTION	CODE ID 98747	SPI NO. (TPO) F01-237-4417
ITEM NOMENCLATURE SELECTOR, MODE		SHEET 5 OF 6

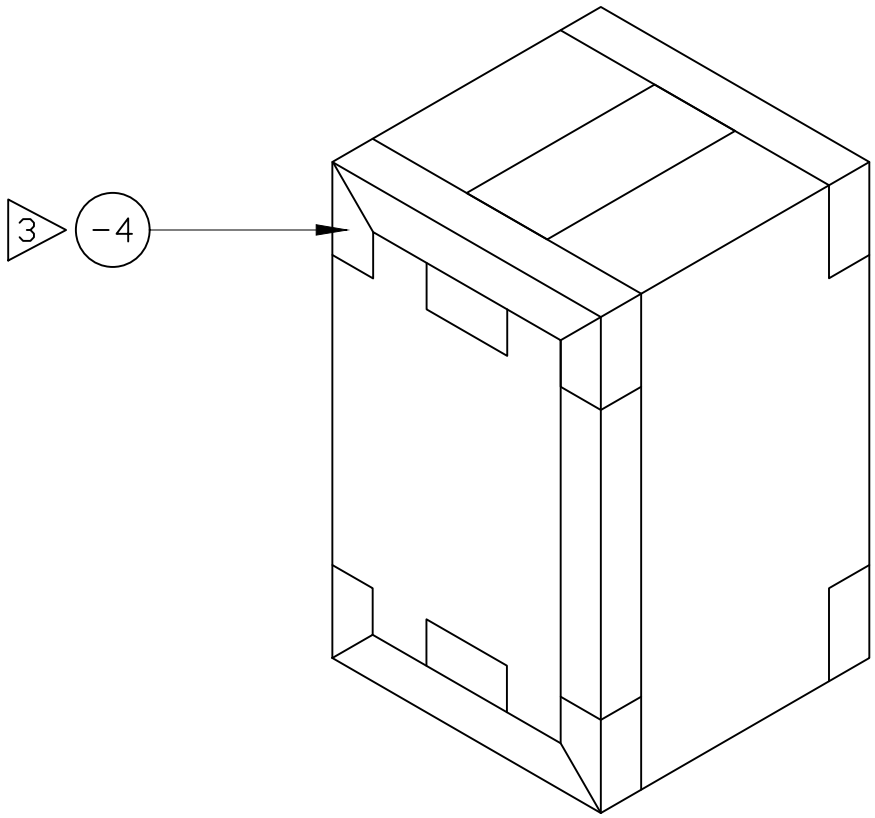

CLOSURE

SPECIAL PACKAGING INSTRUCTION	CODE ID 98747	SPI NO. (TPO) F01-237-4417
ITEM NOMENCLATURE SELECTOR, MODE		SHEET 6 OF 6

PALLETIZATION PROCEDURE FOR LEVEL B PACK

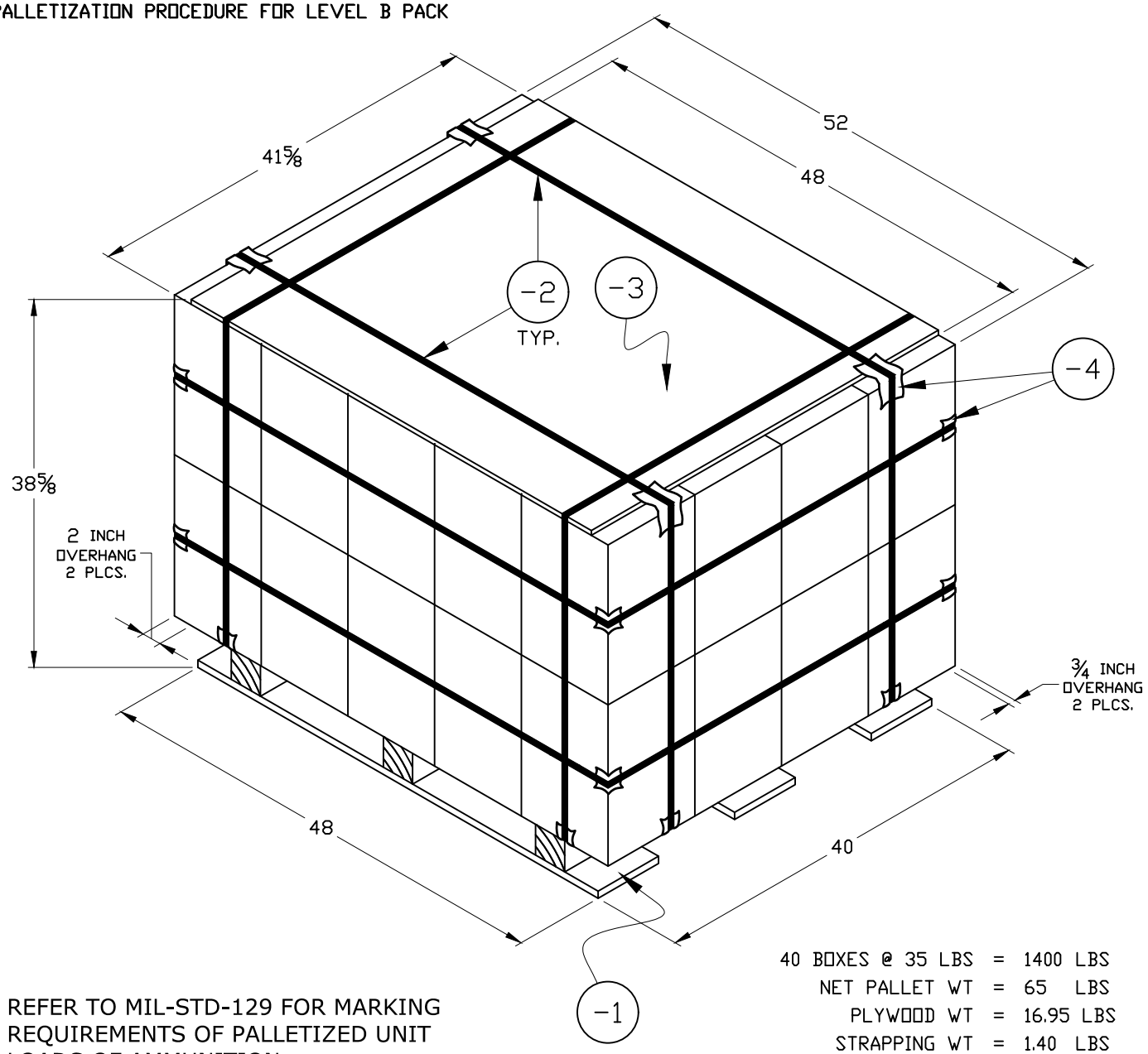

REFER TO MIL-STD-129 FOR MARKING REQUIREMENTS OF PALLETIZED UNIT LOADS OF AMMUNITION.

40 BOXES @ 35 LBS	=	1400 LBS
NET PALLET WT	=	65 LBS
PLYWOOD WT	=	16.95 LBS
STRAPPING WT	=	1.40 LBS
		1483.35 LBS

CUBE OF PALLETIZED LOAD = 48.4

P/N	QTY REQD	NOMENCLATURE OR DESCRIPTION	SIZE: (INCHES UNLESS SPECIFIED) TOLERANCES ON FRAC. ± ⅛, DECIMAL ± .10, ANGLES ± 1°	MATERIAL SPECIFICATION
-4	20	EDGE PROTECTOR	AS MANUFACTURED	NSN 8135-00-145-0070 (OR EQUAL)
-3	1	PLYWOOD	48 X 41 5/8 X 3/8	A-A-55057 TYPE A
-2	6	STRAPPING, STEEL	3/4 X .015 (MIN) X AS REQUIRED	ASTM D3953 TYPE 1, REG DUTY, FIN B, GRADE 2
-1	1	PALLET, 4-WAY ENTRY	40 X 48	MIL-DTL-15011 TYPE I, CLASS 1, STYLE 1

SPECIAL PACKAGING INSTRUCTION

CODE ID	SPI NO. (TPO)
98747	F01-270-0860
	SHEET 1 OF 6

PART OR DRAWING NO.	NATIONAL STOCK NO.	CURRENT REV
MULTIPLE PART NUMBERS	1377-01-270-0860 ES	N
ITEM NOMENCLATURE		ORIGINAL DATE
CARTRIDGE, IMPULSE		79219

ILL. K. KNIGHTON
P.S. B. GORDER
CHK. D. HALE
AUTH. J. BURLEIGH

DODPOPHM/USA/DOD/AF70/TR14013

MILITARY PRESERVATION IAW MIL-STD-2073-1

SERVICEABLE METHOD: 41
UNSERVICEABLE METHOD: 41
QUP 001 ▷1
ICQ 000
CLEANING & DRYING: IAW MIL-STD-2073-1
PRESERVATIVE: N/A

MARKING IAW MIL-STD-129

SPECIAL MARKINGS:

A) SPI NO. F01-270-0860
MARK THE SPI NUMBER ON THE IDENTIFICATION SIDE OF CONTAINER.

B) PROPER SHIPPING NAME: CARTRIDGES, POWER DEVICE UN0276

C) UN POP MARKING: UN 4G/Y20/S/** USA/DOD/AF70

**THE LAST TWO DIGITS OF THE YEAR DURING WHICH THE PACKAGING WAS MANUFACTURED.

D) REUSABLE CONTAINER & DUNNAGE DO NOT DESTROY.

NOTE: THE ABOVE POP MARKINGS ARE FOR DOD USE ONLY.

CLOSURE:

LEVEL A: IAW: ASTM D6251
LEVEL B: IAW: THIS INSTRUCTION

PACKING AS SPECIFIED BELOW AND BILL OF MATERIALS

LEVEL	SPEC	STYLE	TYPE	CL	VRTY	GR	TR
A	ASTM D6251	A	III	2			B
B	ASTM D5118	RSC				V3c	

	LEVEL A	LEVEL B
GROSS CU FT	SEE NOTICE 2	1.043
GROSS WT LBS	SEE NOTICE 2	5
DESIGN FRAGILITY G	80	80

	LENGTH	WIDTH	DEPTH
CNTR I.D.			
LEVEL A:	SEE NOTICE 2		
LEVEL B:	10	10	16
CNTR O.D.			
LEVEL A:	SEE NOTICE 2		
LEVEL B:	10 3/8	10 3/8	16 3/4
ITEM DIM	VARIES		
ITEM WT.	VARIES		

CONSTRUCTION NOTICES:

DO NOT USE STAPLES FOR ASSEMBLY OF WOODEN CONTAINERS.

REVISIONS

LTR	DESCRIPTION	DATE
L	CHANGED TEST REPORT FROM 99004 TO 14013. CHANGED HAZ CLASS FROM UN0323 TO UN 0276, IAW JHCS. REMOVED SHIPPING CONTAINER FROM BOM	15029
M	ADDED DISTRIBUTION STATEMENT AND DESTRUCTION NOTICE CORRECTED BOM	18183
N	UPDATED POP MARKING, CUI MARKINGS AND NOTICES, ADDED STAPLE NOTE AND CLOSURE DRAWING	23167

SPI NO. F01-270-0860

CONTROLLED BY: 406 SCMS
CONTROLLED BY: GULAA-HILL AFB
CONTROLLED BY: CUI/SP-CTI
DISTRIBUTION/DISSEMINATION CONTROL: FEDCON
POC: 406SCMS.GULAA.CONTRACTSHILL@US.AF.MIL

SPECIAL PACKAGING INSTRUCTION	CODE ID 98747	SPI NO. (TPO) F01-270-0860
ITEM NOMENCLATURE CARTRIDGE, IMPULSE		SHEET 2 OF 6

P/N	QTY REQD	NOMENCLATURE OR DESCRIPTION	SIZE: (INCHES UNLESS SPECIFIED) TOLERANCES ON FRAC. ± 1/8, DECIMAL ± .10, ANGLES ± 1°	MATERIAL SPECIFICATION
-4	A/R	TAPE, PACKAGING	3 X AS REQUIRED	ASTM D5486 TYPE I OR V
-3	A/R	WRAP	AS REQUIRED	A-A-59135 CLASS 1, GRADE B
-2	1	BARRIER BAG	AS REQUIRED	MIL-DTL-117 TYPE I, CLASS F, STYLE 1
-1	A/R	CUSHIONING	AS REQUIRED	A-A-1898 GRADE II

SPECIAL PACKAGING INSTRUCTION	CODE ID 98747	SPI NO. (TPO) F01-270-0860
ITEM NOMENCLATURE CARTRIDGE, IMPULSE		SHEET 3 OF 6

MUNITION NOTICES

NOTICE 1: CLASS 1 (EXPLOSIVE) MATERIAL OWNED BY THE DEPARTMENT OF DEFENSE (DOD) PACKAGED PRIOR TO JANUARY 1, 1990 IN ACCORDANCE WITH THE PACKAGING REQUIREMENTS IN EFFECT AT THAT TIME ARE EXCEPTED FROM THE REQUIREMENTS OF PERFORMANCE ORIENTED PACKAGING (POP) PROVIDED THE PACKAGING HAVE MAINTAINED THEIR INTEGRITY AND THE GOODS ARE DECLARED AS GOVERNMENT OWNED GOODS PACKAGED PRIOR TO JANUARY 1, 1990. THIS CLAUSE DOES NOT APPLY TO COMMERCIAL AIR SHIPMENTS. (REF DLAD 4145.41/AFJI 24-210.)

NOTICE 2: FOR LEVEL A PACKING REQUIREMENTS: THE LEVEL B PACKS SHALL BE OVERBOXED IN A LEVEL A SPECIFIED CONTAINER SHOWN ON PAGE 1 UNDER PACKAGING LEVEL A. MARK THE OUTSIDE OF THE OVERBOX "OVERPACK." THE SIZE AND WEIGHT OF THE OVERBOX WILL VARY DEPENDING ON THE NUMBER OF ITEMS BEING SHIPPED. USE FILLER PAD OF ASTM D4727, CF, DOM, GR 275 (OR EQUAL) TO ENSURE A TIGHT FIT IN THE OVERBOX.

NOTICE 3: LEVEL A PROTECTION REQUIRED TO MEET THE MOST SEVERE WORLDWIDE SHIPMENT, HANDLING, AND STORAGE CONDITIONS. EXAMPLES OF SITUATIONS ARE: WAR RESERVE MATERIAL, MOBILIZATION, STRATEGIC AND THEATER DEPLOYMENT, OPEN STORAGE AND DECK LOADING. SECURITY ASSISTANCE ITEMS, INCLUDING FMS, ARE ESPECIALLY SUSCEPTIBLE TO DAMAGE DUE TO UNKNOWN AND UNFAVORABLE TRANSPORTATION, CLIMATIC, AND STORAGE CONDITIONS. PROVIDE LEVEL B PACKING UNLESS OTHERWISE DIRECTED BY THE PROCURING COUNTRY.

NOTICE 4: ASSETS PACKAGED IN ACCORDANCE WITH PREVIOUS EDITIONS OF THIS SPI DO NOT REQUIRE REPACKAGING IF THE INTEGRITY OF THE SPI IS MAINTAINED.

NOTICE 5: SEE SPIRES FOR A COMPLETE LISTING OF NSN's ASSIGNED TO THIS SPI.

NOTICE 6: THIS SPI IS NOT AUTHORIZED FOR USE WITHOUT PROPER HAZARD CLASSIFICATION. UNLESS A FINAL HAZARD CLASSIFICATION HAS BEEN ISSUED, A COPY OF THE VALID INTERIM HAZARD CLASSIFICATION LETTER ALONG WITH DOT SP 15448 MUST ACCOMPANY EACH SHIPMENT.

INTERNATIONAL STANDARDS FOR PHYTOSANITARY MEASURES
REVISION OF ISPM NO. 15
REVISION OF WOOD PACKAGING MATERIAL FOR INTERNATIONAL TRADE

THE FOLLOWING STATEMENT IS IN COMPLIANCE WITH THE UNITED NATIONS-IMPLEMENTED RESTRICTIONS ON WOOD PACKAGING MATERIAL (WPM). THIS REQUIREMENT IS SPECIFICALLY CONCERNED WITH INVASIVE SPECIES SUCH AS THE PINEWOOD NEMATODE. WPM IS DEFINED AS WOOD PALLETS, SKIDS, LOAD BOARDS, PALLET COLLARS, WOODEN BOXES, REELS, DUNNAGE, CRATES, FRAMES, AND CLEATS. THE STATEMENT BELOW CITES THE REQUIREMENTS IN DETAIL AND COVERS LUMBER FOR BUILDING CONTAINERS AND PALLETS USED FOR DELIVERIES, RESULTING IN SHIPMENTS WORLDWIDE (DIRECT, OR THROUGH AIR LOGISTICS CENTERS (ALC), CONTAINER CONSOLIDATION POINTS (CCP), OR OTHER BASES).

WOODEN LUMBER, WOODEN PALLET AND PACKAGING/CONTAINER STATEMENT:

ALL WOODEN LUMBER, WOODEN PALLETS, AND WOODEN CONTAINERS PRODUCED ENTIRELY OR IN PART OF WOOD PACKAGING MATERIAL (WPM) SHALL BE CONSTRUCTED FROM DEBARKED WOOD IN ADDITION TO THE APPLICATION OF HEAT-TREATED (HT) MATERIAL (HT TO 56 DEGREES CENTIGRADE OR 133 DEGREES FAHRENHEIT FOR 30 MINUTES). CERTIFICATION/MARKING IS REQUIRED BY AN ACCREDITED AGENCY RECOGNIZED BY THE AMERICAN LUMBER STANDARDS COMMITTEE (ALSC). FOR REFERENCE DOCUMENTATION, SEE LATEST REVISION OF "INTERNATIONAL STANDARDS FOR PHYTOSANITARY MEASURES (ISPM NO. 15), "REGULATION OF WOOD PACKAGING MATERIAL IN INTERNATIONAL TRADE."

NOTES

1. PLACE UP TO 10 BAGGED ITEMS IN CONTAINER. NOT TO EXCEED THE POP TESTED WEIGHT.

2. WRAP ITEM WITH REF.-3 AND PLACE INTO REF.-2 BARRIER BAG. EXPEL AIR AND SEAL.

SPECIAL PACKAGING INSTRUCTION	CODE ID 98747	SPI NO. (TPO) F01-270-0860
ITEM NOMENCLATURE CARTRIDGE, IMPULSE		SHEET 4 OF 6

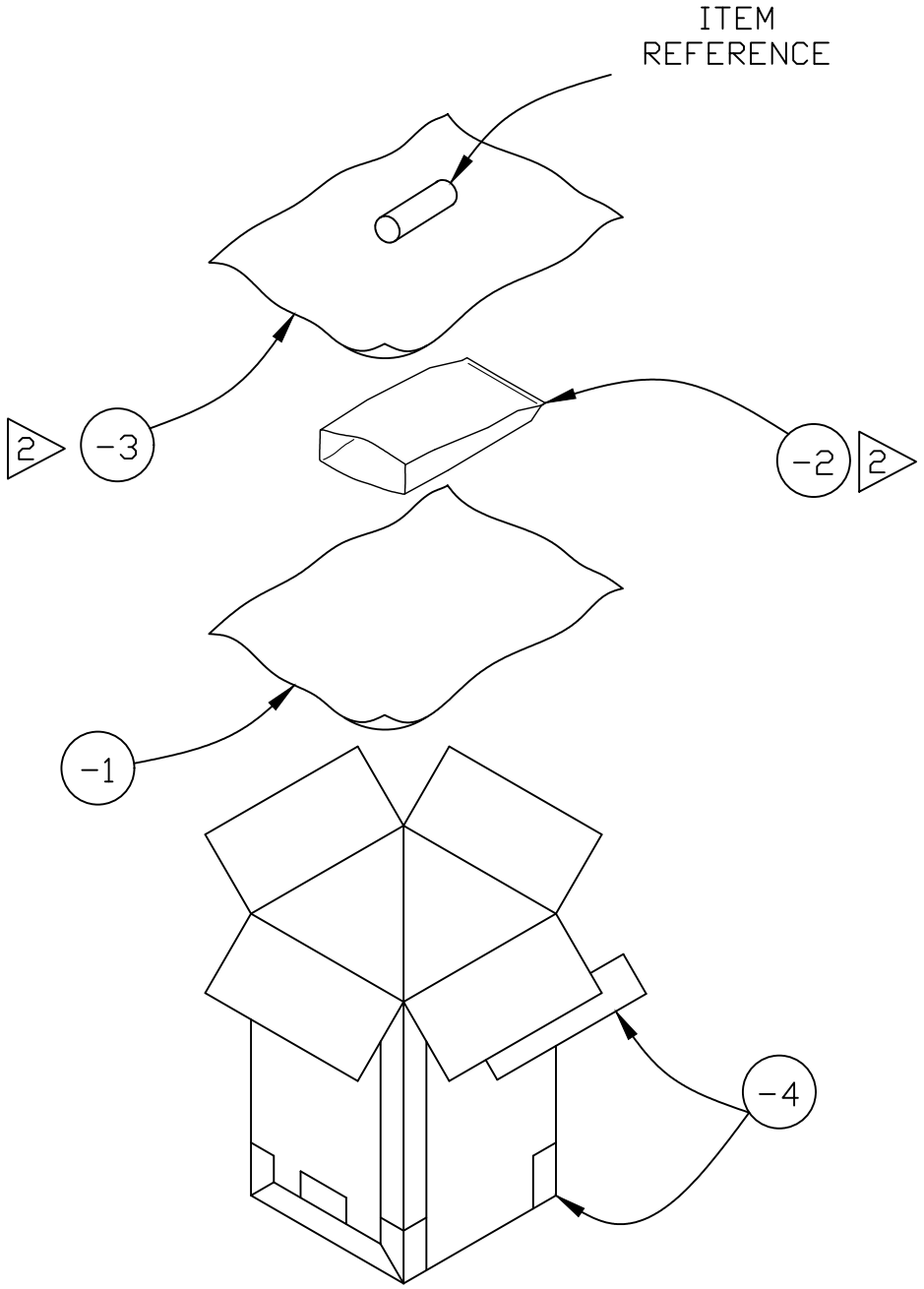

SPECIAL PACKAGING INSTRUCTION	CODE ID 98747	SPI NO. (TPO) F01-270-0860
ITEM NOMENCLATURE CARTRIDGE, IMPULSE		SHEET 5 OF 6

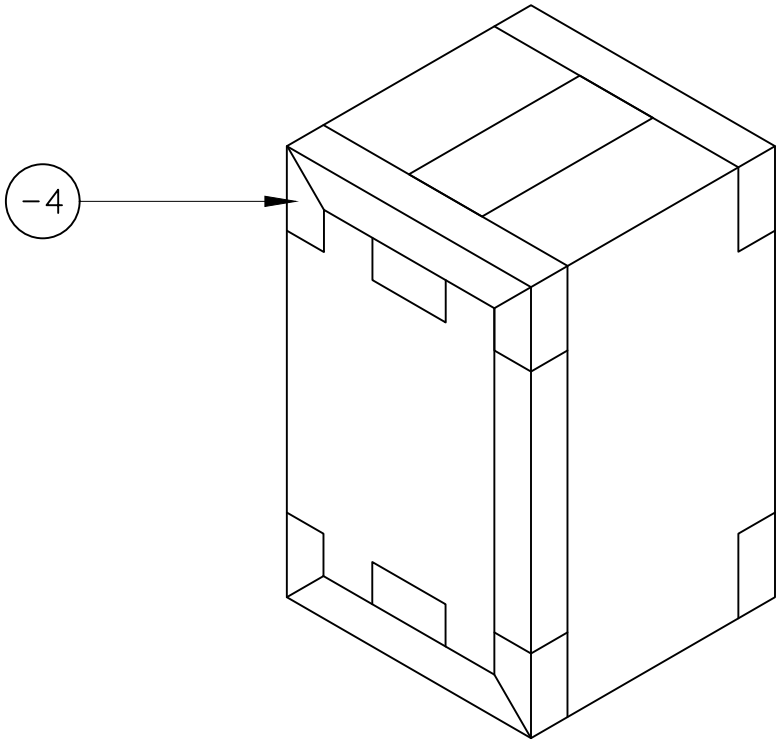

CLOSURE

SPECIAL PACKAGING INSTRUCTION	CODE ID 98747	SPI NO. (TPO) F01-270-0860
ITEM NOMENCLATURE CARTRIDGE, IMPULSE		SHEET 6 OF 6

PALLETIZATION PROCEDURE FOR LEVEL B PACK

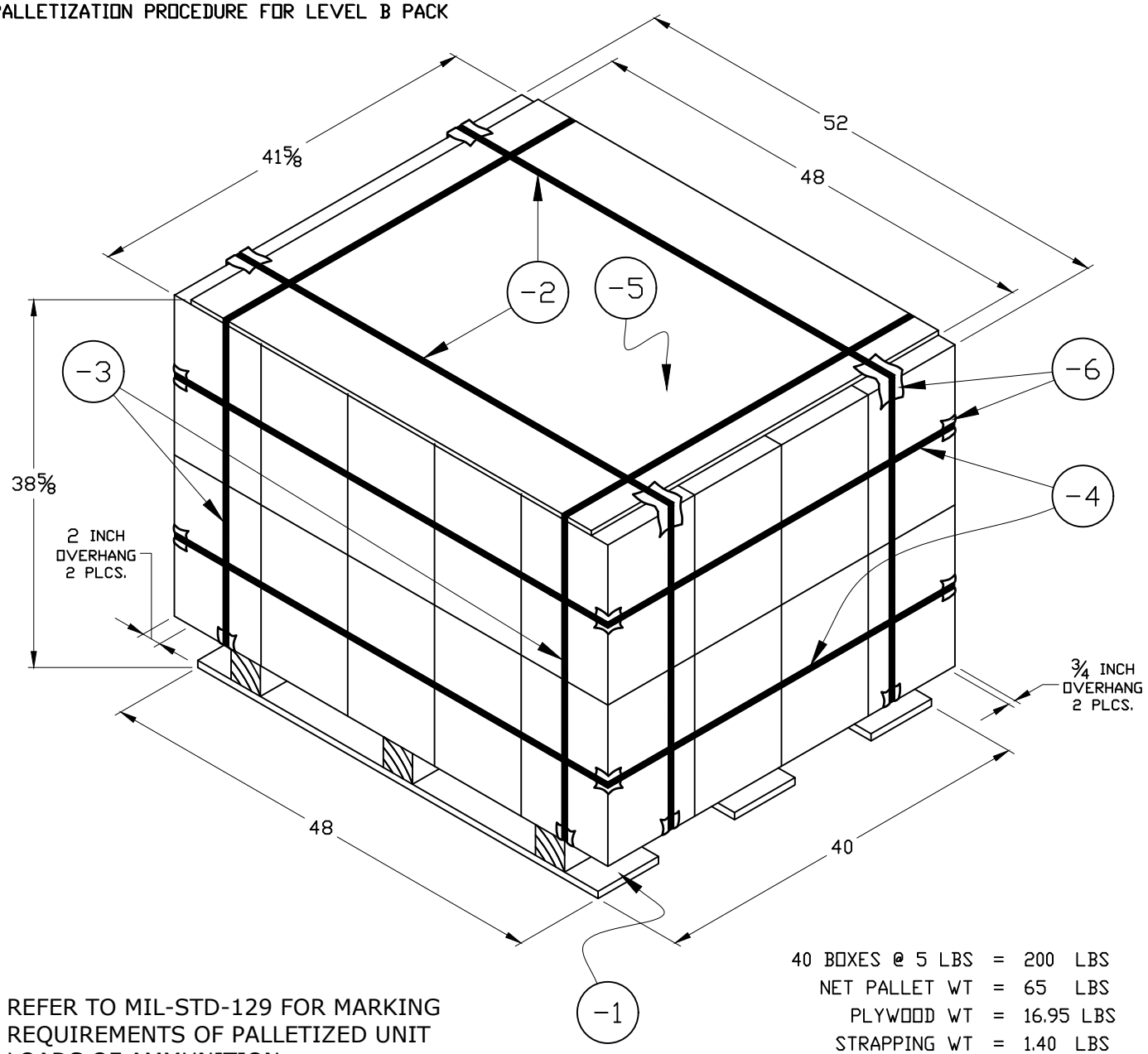

REFER TO MIL-STD-129 FOR MARKING REQUIREMENTS OF PALLETIZED UNIT LOADS OF AMMUNITION.

40 BOXES @ 5 LBS	=	200	LBS
NET PALLET WT	=	65	LBS
PLYWOOD WT	=	16.95	LBS
STRAPPING WT	=	1.40	LBS
		283.35	LBS

CUBE OF PALETIZED LOAD = 48.4

P/N	QTY REQD	NOMENCLATURE OR DESCRIPTION	SIZE: (INCHES UNLESS SPECIFIED) TOLERANCES ON FRAC. ± 1/8, DECIMAL ± .10, ANGLES ± 1°	MATERIAL SPECIFICATION
-6	20	EDGE PROTECTORS	AS MANUFACTURED	NSN 8135-00-145-0070 (OR EQUAL)
-5	1	PLYWOOD	48 X 41 5/8 X 3/8	A-A-55057 TYPE A
-4	2	STRAPPING, STEEL	3/4 X .015 X AS REQUIRED	ASTM D3953 TYPE 1, REG DUTY, FIN B, GRADE 2
-3	2	STRAPPING, STEEL	3/4 X .015 X AS REQUIRED	ASTM D3953 TYPE 1, REG DUTY, FIN B, GRADE 2
-2	2	STRAPPING, STEEL	3/4 X .015 X AS REQUIRED	ASTM D3953 TYPE 1, REG DUTY, FIN B, GRADE 2
-1	1	PALLET, 4-WAY ENTRY	40 X 48	MIL-DTL-15011 TYPE I, CLASS 1, STYLE 1

SPECIAL PACKAGING INSTRUCTION

CODE ID	SPI NO. (TPO)
98747	F01-271-5483
	SHEET 1 OF 6

PART OR DRAWING NO.	NATIONAL STOCK NO.	CURRENT REV	
MULTIPLE PART NUMBERS	1377-01-271-5483 ES	N	ILL. K. KNIGHTON P.S. S. PEELER
ITEM NOMENCLATURE		ORIGINAL DATE	CHK. D. HALE
ACTUATOR, EXPLOSIVE, LINEAR		96347	AUTH. J. BURLEIGH

MILITARY PRESERVATION IAW MIL-STD-2073-1

SERVICEABLE METHOD: 41
UNSERVICEABLE METHOD: 41

QUP 001 ▷2
ICQ 000

CLEANING & DRYING: IAW MIL-STD-2073-1
PRESERVATIVE: N/A

MARKING IAW MIL-STD-129

SPECIAL MARKINGS:

A) SPI NO. F01-271-5483
MARK THE SPI NUMBER ON THE IDENTIFICATION SIDE OF CONTAINER.

B) PROPER SHIPPING NAME: RELEASE DEVICES, EXPLOSIVE UN0173

C) UN POP MARKING: UN 4G/Y20/S/**
USA/DOD/AF70

**THE LAST TWO DIGITS OF THE YEAR DURING WHICH THE PACKAGING WAS MANUFACTURED.

D) REUSABLE CONTAINER & DUNNAGE DO NOT DESTROY.

NOTE: THE ABOVE POP MARKINGS ARE FOR DOD USE ONLY.

CLOSURE:

LEVEL A: IAW: ASTM D6251
LEVEL B: IAW: THIS INSTRUCTION

PACKING AS SPECIFIED BELOW AND BILL OF MATERIALS

LEVEL	SPEC	STYLE	TYPE	CL	VRTY	GR	TR
A	ASTM D6251	A	III	2			B
B	ASTM D5118	RSC				V3c	

	LEVEL A	LEVEL B
GROSS CU FT	SEE NOTICE 1	1.043
GROSS WT LBS	SEE NOTICE 1	11
DESIGN FRAGILITY G	80	80

	LENGTH	WIDTH	DEPTH
CNTR I.D.			
LEVEL A:	SEE NOTICE 1		
LEVEL B:	10	10	16
CNTR O.D.			
LEVEL A:	SEE NOTICE 1		
LEVEL B:	10 3/8	10 3/8	16 3/4
ITEM DIM	VARIES		
ITEM WT.	VARIES		

REVISIONS		
LTR	DESCRIPTION	DATE
N	LOWERED POP MARKING, UPDATED PALLETIZATION BOM, AND FORMAT	23360

CONTROLLED BY: 406 SCMS
CONTROLLED BY: GULAA-HILL AFB
CONTROLLED BY: CUI/SP-CTI
DISTRIBUTION/DISSEMINATION CONTROL: FEDCON
POC: 406SCMS.GULAA.CONTRACTSHILL@US.AF.MIL

DODPOPHM/USA/DOD/AF70/TR14019

SPI NO. F01-271-5483

SPECIAL PACKAGING INSTRUCTION	CODE ID 98747	SPI NO. (TPO) F01-271-5483
ITEM NOMENCLATURE ACTUATOR, EXPLOSIVE, LINEAR		SHEET 2 OF 6

P/N	QTY REQD	NOMENCLATURE OR DESCRIPTION	SIZE: (INCHES UNLESS SPECIFIED) TOLERANCES ON FRAC. ± 1/8, DECIMAL ± .10, ANGLES ± 1°	MATERIAL SPECIFICATION	
-4	A/R	TAPE	3 X AS REQUIRED	ASTM D5486 TYPE I OR V	3
-3	A/R	WRAP	AS REQUIRED	A-A-59135 CL. 1, GR. B OR EQUAL	1
-2	1	BARRIER BAG	AS REQUIRED	MIL-DTL-117 TYPE I, CL. F, STYLE 1	1
-1	A/R	CUSHIONING	AS REQUIRED	A-A-1898 GR. II, CL. B OR EQUAL	2

SPECIAL PACKAGING INSTRUCTION	CODE ID 98747	SPI NO. (TPO) F01-271-5483
ITEM NOMENCLATURE ACTUATOR, EXPLOSIVE, LINEAR		SHEET 3 OF 6

MUNITION NOTICES

NOTICE 1: FOR LEVEL A PACKING REQUIREMENTS: THE LEVEL B PACKS SHALL BE OVERBOXED IN A LEVEL A SPECIFIED CONTAINER SHOWN ON PAGE 1 UNDER PACKAGING LEVEL A. MARK THE OUTSIDE OF THE OVERBOX "OVERPACK." THE SIZE AND WEIGHT OF THE OVERBOX WILL VARY DEPENDING ON THE NUMBER OF ITEMS BEING SHIPPED. USE FILLER PAD OF ASTM D4727, CF, DOM, GR 275 (OR EQUAL) TO ENSURE A TIGHT FIT IN THE OVERBOX.

NOTICE 2: ASSETS PACKAGED IN ACCORDANCE WITH PREVIOUS EDITIONS OF THIS SPI DO NOT REQUIRE REPACKAGING IF THE INTEGRITY OF THE SPI IS MAINTAINED.

NOTICE 3: SEE SPIRES FOR A COMPLETE LISTING OF NSN's ASSIGNED TO THIS SPI.

NOTICE 4: THIS SPI IS NOT AUTHORIZED FOR USE WITHOUT PROPER HAZARD CLASSIFICATION. UNLESS A FINAL HAZARD CLASSIFICATION HAS BEEN ISSUED, A COPY OF THE VALID INTERIM HAZARD CLASSIFICATION LETTER ALONG WITH DOT SP 15448 MUST ACCOMPANY EACH SHIPMENT.

NOTICE 5: LEVEL A PROTECTION REQUIRED TO MEET THE MOST SEVERE WORLDWIDE SHIPMENT, HANDLING, AND STORAGE CONDITIONS. EXAMPLES OF SITUATIONS ARE: WAR RESERVE MATERIAL, MOBILIZATION, STRATEGIC AND THEATER DEPLOYMENT, OPEN STORAGE AND DECK LOADING. SECURITY ASSISTANCE ITEMS, INCLUDING FMS, ARE ESPECIALLY SUSCEPTIBLE TO DAMAGE DUE TO UNKNOWN AND UNFAVORABLE TRANSPORTATION, CLIMATIC, AND STORAGE CONDITIONS. PROVIDE LEVEL B PACKING UNLESS OTHERWISE DIRECTED BY THE PROCURING COUNTRY.

INTERNATIONAL STANDARDS FOR PHYTOSANITARY MEASURES
REVISION OF ISPM NO. 15
REVISION OF WOOD PACKAGING MATERIAL FOR INTERNATIONAL TRADE

THE FOLLOWING STATEMENT IS IN COMPLIANCE WITH THE UNITED NATIONS-IMPLEMENTED RESTRICTIONS ON WOOD PACKAGING MATERIAL (WPM). THIS REQUIREMENT IS SPECIFICALLY CONCERNED WITH INVASIVE SPECIES SUCH AS THE PINEWOOD NEMATODE. WPM IS DEFINED AS WOOD PALLETS, SKIDS, LOAD BOARDS, PALLET COLLARS, WOODEN BOXES, REELS, DUNNAGE, CRATES, FRAMES, AND CLEATS. THE STATEMENT BELOW CITES THE REQUIREMENTS IN DETAIL AND COVERS LUMBER FOR BUILDING CONTAINERS AND PALLETS USED FOR DELIVERIES, RESULTING IN SHIPMENTS WORLDWIDE (DIRECT, OR THROUGH AIR LOGISTICS CENTERS (ALC), CONTAINER CONSOLIDATION POINTS (CCP), OR OTHER BASES).

WOODEN LUMBER, WOODEN PALLET AND PACKAGING/CONTAINER STATEMENT:

ALL WOODEN LUMBER, WOODEN PALLETS, AND WOODEN CONTAINERS PRODUCED ENTIRELY OR IN PART OF WOOD PACKAGING MATERIAL (WPM) SHALL BE CONSTRUCTED FROM DEBARKED WOOD IN ADDITION TO THE APPLICATION OF HEAT-TREATED (HT) MATERIAL (HT TO 56 DEGREES CENTIGRADE OR 133 DEGREES FAHRENHEIT FOR 30 MINUTES). CERTIFICATION/MARKING IS REQUIRED BY AN ACCREDITED AGENCY RECOGNIZED BY THE AMERICAN LUMBER STANDARDS COMMITTEE (ALSC). FOR REFERENCE DOCUMENTATION, SEE LATEST REVISION OF "INTERNATIONAL STANDARDS FOR PHYTOSANITARY MEASURES (ISPM NO. 15), "REGULATION OF WOOD PACKAGING MATERIAL IN INTERNATIONAL TRADE."

NOTES

1. WRAP EACH ITEM USING REF.-3, PLACE IN BAG, REF.-2, REMOVE AIR AND SEAL.

2. PLACE UP TO 5 ITEMS IN SHIPPING CONTAINER, ADD CUSHIONING, REF.-1, AS REQUIRED TO ENSURE A SNUG FIT AND TO PREVENT ITEMS FROM CONTACTING SIDES.

3. CLOSE AND TAPE CONTAINER WITH REF.-4.

SPECIAL PACKAGING INSTRUCTION	CODE ID 98747	SPI NO. (TPO) F01-271-5483
ITEM NOMENCLATURE ACTUATOR, EXPLOSIVE, LINEAR		SHEET 4 OF 6

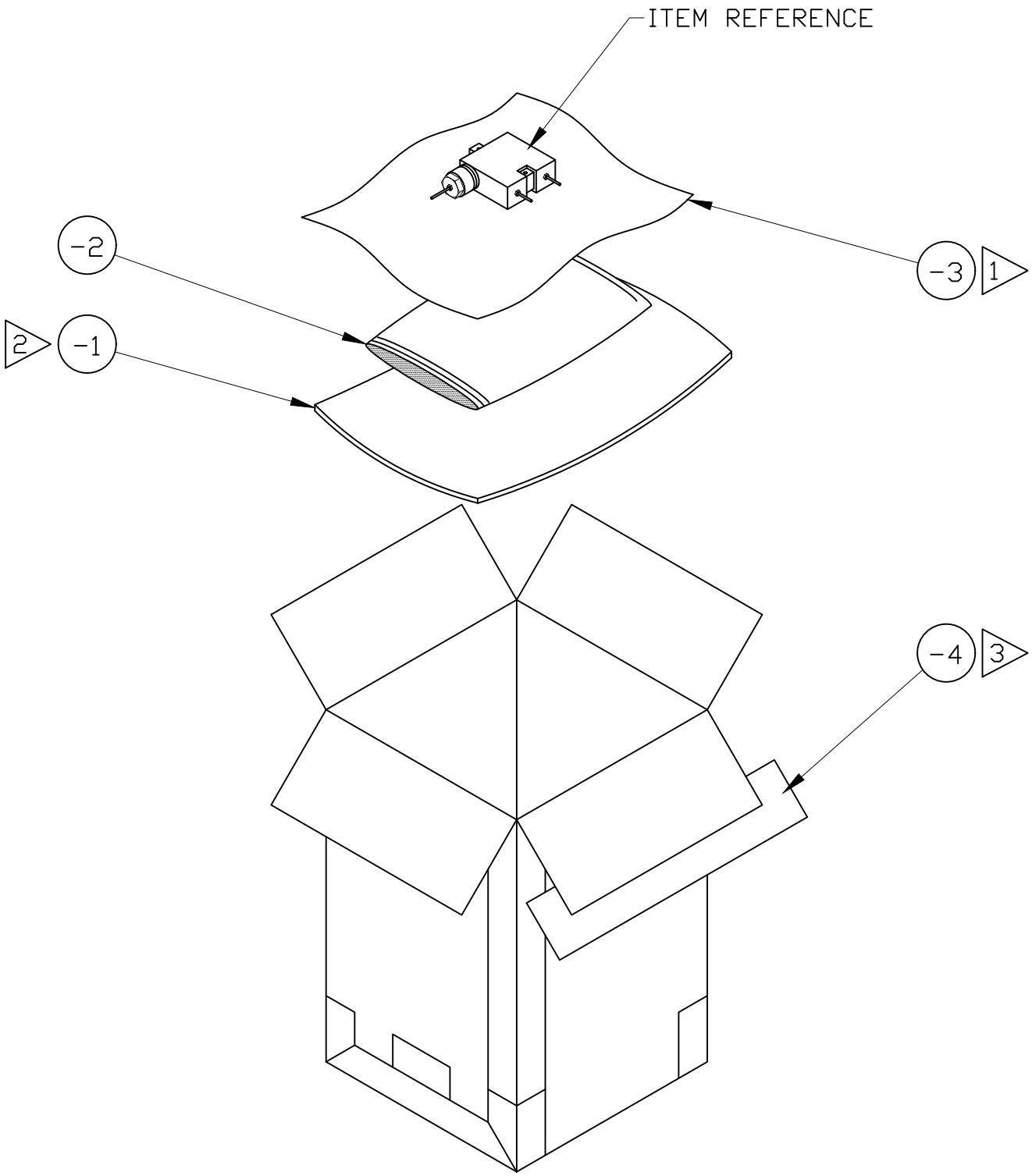

SPECIAL PACKAGING INSTRUCTION	CODE ID 98747	SPI NO. (TPO) F01-271-5483
ITEM NOMENCLATURE ACTUATOR, EXPLOSIVE, LINEAR		SHEET 5 OF 6

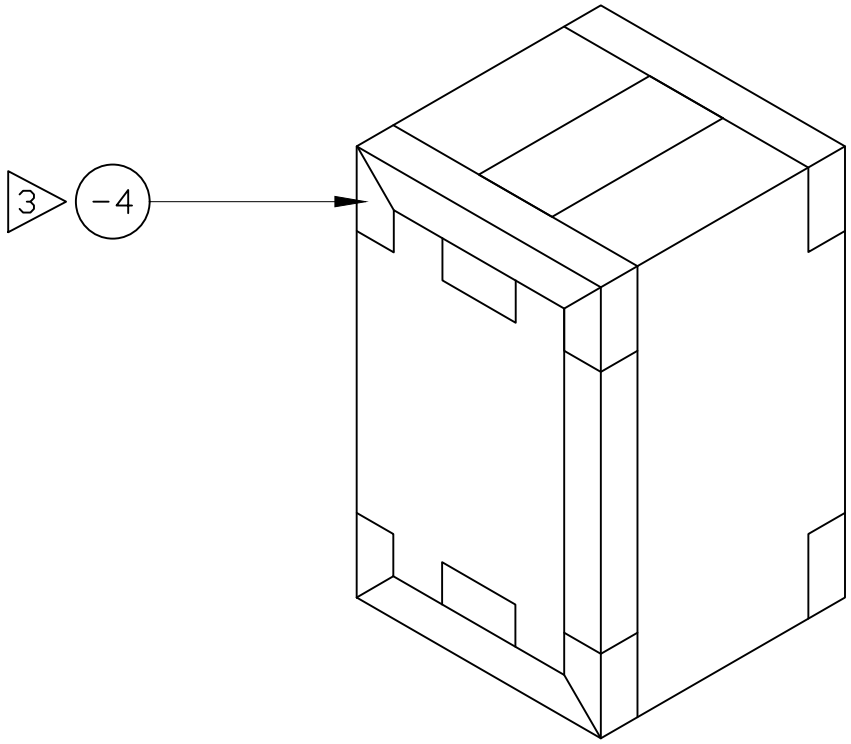

CLOSURE

SPECIAL PACKAGING INSTRUCTION	CODE ID 98747	SPI NO. (TPO) F01-271-5483
ITEM NOMENCLATURE ACTUATOR, EXPLOSIVE, LINEAR		SHEET 6 OF 6

PALLETIZATION PROCEDURE FOR LEVEL B PACK

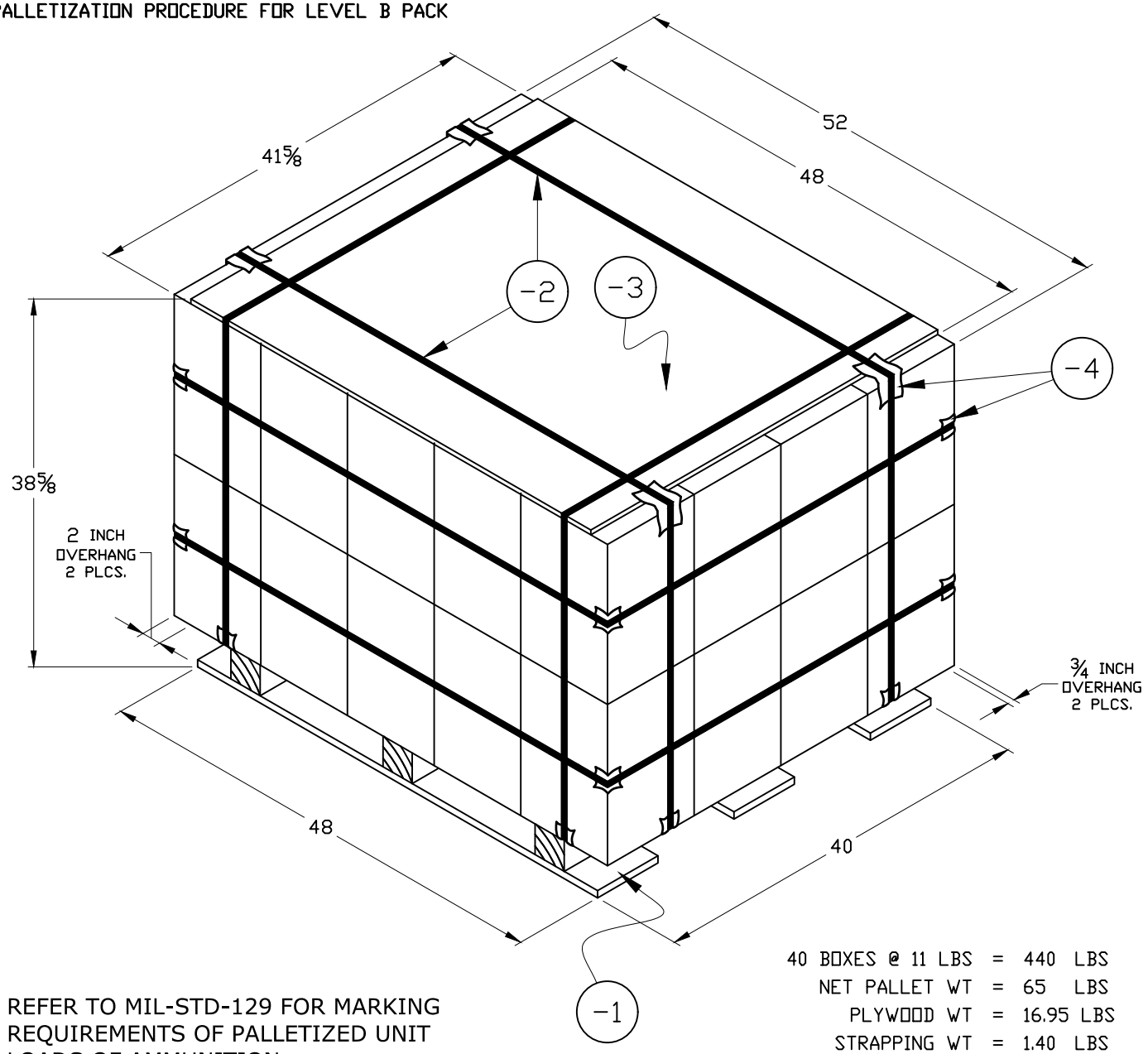

REFER TO MIL-STD-129 FOR MARKING REQUIREMENTS OF PALLETIZED UNIT LOADS OF AMMUNITION.

40 BOXES @ 11 LBS	=	440 LBS
NET PALLET WT	=	65 LBS
PLYWOOD WT	=	16.95 LBS
STRAPPING WT	=	1.40 LBS
		523.35 LBS

CUBE OF PALLETIZED LOAD = 48.4

P/N	QTY REQD	NOMENCLATURE OR DESCRIPTION	SIZE: (INCHES UNLESS SPECIFIED) TOLERANCES ON FRAC. ± ⅛, DECIMAL ± .10, ANGLES ± 1°	MATERIAL SPECIFICATION
-4	20	EDGE PROTECTOR	AS MANUFACTURED	NSN 8135-00-145-0070 (OR EQUAL)
-3	1	PLYWOOD	48 X 41 5/8 X 3/8	A-A-55057 TYPE A
-2	6	STRAPPING, STEEL	3/4 X .015 (MIN) X AS REQUIRED	ASTM D3953 TYPE 1, REG DUTY, FIN B, GRADE 2
-1	1	PALLET, 4-WAY ENTRY	40 X 48	MIL-DTL-15011 TYPE I, CLASS 1, STYLE 1

SPECIAL PACKAGING INSTRUCTION

CODE ID	SPI NO. (TPO)
98747	F01-271-7161
	SHEET 1 OF 6

PART OR DRAWING NO.	NATIONAL STOCK NO.	CURRENT REV
MULTIPLE PART NUMBERS	1377-01-271-7161 ES	B

ITEM NOMENCLATURE
INITIATOR, PROPELLANT ACTUATED

ORIGINAL DATE
14233

ILL. K. KNIGHTON
P.S. S. OYLER
CHK. D. HALE
AUTH. J. BURLEIGH

MILITARY PRESERVATION IAW MIL-STD-2073-1

SERVICEABLE METHOD: 41
UNSERVICEABLE METHOD: 41

QUP 001 ▷3
ICQ 000

CLEANING & DRYING: IAW MIL-STD-2073-1
PRESERVATIVE: N/A

MARKING IAW MIL-STD-129

SPECIAL MARKINGS:

A) SPI NO. F01-271-7161
MARK THE SPI NUMBER ON THE IDENTIFICATION SIDE OF CONTAINER.

B) PROPER SHIPPING NAME: CARTRIDGES, POWER DEVICE UN0276

C) UN POP MARKING: (UN) 4G/Y15/S/**
USA/DOD/AF70

**THE LAST TWO DIGITS OF THE YEAR DURING WHICH THE PACKAGING WAS MANUFACTURED.

D) REUSABLE CONTAINER & DUNNAGE DO NOT DESTROY.

NOTE: THE ABOVE POP MARKINGS ARE FOR DOD USE ONLY.

CLOSURE:

LEVEL A: IAW: ASTM D6251
LEVEL B: IAW: THIS INSTRUCTION

PACKING AS SPECIFIED BELOW AND BILL OF MATERIALS

LEVEL	SPEC	STYLE	TYPE	CL	VRTY	GR	TR
A	ASTM D6251	A	III	2			B
B	ASTM D5118	RSC				V3c	

	LEVEL A	LEVEL B
GROSS CU FT	SEE NOTICE 1	1.043
GROSS WT LBS	SEE NOTICE 1	25
DESIGN FRAGILITY G	60	60

	LENGTH	WIDTH	DEPTH
CNTR I.D.			
LEVEL A:	SEE NOTICE 1		
LEVEL B:	10	10	16
CNTR O.D.			
LEVEL A:	SEE NOTICE 1		
LEVEL B:	10 3/8	10 3/8	16 3/4
ITEM DIM	VARIES		
ITEM WT.	VARIES		

REVISIONS

LTR	DESCRIPTION	DATE
A	REMOVED SHIPPING CONTAINER FROM BOM, ADDED DISTRIBUTION STATEMENT	17354
B	DECREASED POP TESTED WEIGHT, ADDED CUI AND FINAL CONTAINER DRAWING, UPDATED LEVEL B CLOSURE, NOTICES AND PALLETIZATION	24337

CONTROLLED BY: 406 SCMS
CONTROLLED BY: GULAA-HILL AFB
CONTROLLED BY: CUI/SP-CTI
DISTRIBUTION/DISSEMINATION CONTROL: FEDCON
POC: 406SCMS.GULAA.CONTRACTSHILL@US.AF.MIL

DODPOPHM/USA/DOD/AF70/TR14002

SPI NO. F01-271-7161

SPECIAL PACKAGING INSTRUCTION	CODE ID 98747	SPI NO. (TPO) F01-271-7161
ITEM NOMENCLATURE INITIATOR, PROPELLANT ACTUATED		SHEET 2 OF 6

P/N	QTY REQD	NOMENCLATURE OR DESCRIPTION	SIZE: (INCHES UNLESS SPECIFIED) TOLERANCES ON FRAC. ± 1/8, DECIMAL ± .10, ANGLES ± 1°	MATERIAL SPECIFICATION	
-4	A/R	TAPE, PACKAGING	3 X AS REQUIRED	ASTM D5486 TYPE I OR V	
-3	1	WRAP	AS REQUIRED	MIL-PRF-81705 TYPE I, CL. 1	1
-2	1	BARRIER BAG	AS REQUIRED	MIL-DTL-117 TYPE I, CL. F, STYLE 1	1
-1	A/R	CUSHIONING	AS REQUIRED	A-A-1898 GRADE II	2

SPECIAL PACKAGING INSTRUCTION	CODE ID 98747	SPI NO. (TPO) F01-271-7161
ITEM NOMENCLATURE INITIATOR, PROPELLANT ACTUATED		SHEET 3 OF 6

MUNITION NOTICES

NOTICE 1: FOR LEVEL A PACKING REQUIREMENTS: THE LEVEL B PACKS SHALL BE OVERBOXED IN A LEVEL A SPECIFIED CONTAINER SHOWN ON PAGE 1 UNDER PACKAGING LEVEL A. MARK THE OUTSIDE OF THE OVERBOX "OVERPACK." THE SIZE AND WEIGHT OF THE OVERBOX WILL VARY DEPENDING ON THE NUMBER OF ITEMS BEING SHIPPED. USE FILLER PAD OF ASTM D4727, CF, DOM, GR 275 (OR EQUAL) TO ENSURE A TIGHT FIT IN THE OVERBOX.

NOTICE 2: LEVEL A PROTECTION REQUIRED TO MEET THE MOST SEVERE WORLDWIDE SHIPMENT, HANDLING, AND STORAGE CONDITIONS. EXAMPLES OF SITUATIONS ARE: WAR RESERVE MATERIAL, MOBILIZATION, STRATEGIC AND THEATER DEPLOYMENT, OPEN STORAGE AND DECK LOADING. SECURITY ASSISTANCE ITEMS, INCLUDING FMS, ARE ESPECIALLY SUSCEPTIBLE TO DAMAGE DUE TO UNKNOWN AND UNFAVORABLE TRANSPORTATION, CLIMATIC, AND STORAGE CONDITIONS. PROVIDE LEVEL B PACKING UNLESS OTHERWISE DIRECTED BY THE PROCURING COUNTRY.

NOTICE 3: ASSETS PACKAGED IN ACCORDANCE WITH THE PREVIOUS EDITION OF THIS SPI DO NOT REQUIRE REPACKAGING IF THE INTEGRITY OF THE SPI IS MAINTAINED.

NOTICE 4: SEE SPIRES FOR A COMPLETE LISTING OF NSN's ASSIGNED TO THIS SPI.

NOTICE 5: THIS SPI IS NOT AUTHORIZED FOR USE WITHOUT PROPER HAZARD CLASSIFICATION. UNLESS A FINAL HAZARD CLASSIFICATION HAS BEEN ISSUED, A COPY OF THE VALID INTERIM HAZARD CLASSIFICATION LETTER ALONG WITH DOT SP 15448 MUST ACCOMPANY EACH SHIPMENT.

INTERNATIONAL STANDARDS FOR PHYTOSANITARY MEASURES
REVISION OF ISPM NO. 15
REVISION OF WOOD PACKAGING MATERIAL FOR INTERNATIONAL TRADE

THE FOLLOWING STATEMENT IS IN COMPLIANCE WITH THE UNITED NATIONS-IMPLEMENTED RESTRICTIONS ON WOOD PACKAGING MATERIAL (WPM). THIS REQUIREMENT IS SPECIFICALLY CONCERNED WITH INVASIVE SPECIES SUCH AS THE PINEWOOD NEMATODE. WPM IS DEFINED AS WOOD PALLETS, SKIDS, LOAD BOARDS, PALLET COLLARS, WOODEN BOXES, REELS, DUNNAGE, CRATES, FRAMES, AND CLEATS. THE STATEMENT BELOW CITES THE REQUIREMENTS IN DETAIL AND COVERS LUMBER FOR BUILDING CONTAINERS AND PALLETS USED FOR DELIVERIES, RESULTING IN SHIPMENTS WORLDWIDE (DIRECT, OR THROUGH AIR LOGISTICS CENTERS (ALC), CONTAINER CONSOLIDATION POINTS (CCP), OR OTHER BASES).

WOODEN LUMBER, WOODEN PALLET AND PACKAGING/CONTAINER STATEMENT:

ALL WOODEN LUMBER, WOODEN PALLETS, AND WOODEN CONTAINERS PRODUCED ENTIRELY OR IN PART OF WOOD PACKAGING MATERIAL (WPM) SHALL BE CONSTRUCTED FROM DEBARKED WOOD IN ADDITION TO THE APPLICATION OF HEAT-TREATED (HT) MATERIAL (HT TO 56 DEGREES CENTIGRADE OR 133 DEGREES FAHRENHEIT FOR 30 MINUTES). CERTIFICATION/MARKING IS REQUIRED BY AN ACCREDITED AGENCY RECOGNIZED BY THE AMERICAN LUMBER STANDARDS COMMITTEE (ALSC). FOR REFERENCE DOCUMENTATION, SEE LATEST REVISION OF "INTERNATIONAL STANDARDS FOR PHYTOSANITARY MEASURES (ISPM NO. 15), "REGULATION OF WOOD PACKAGING MATERIAL IN INTERNATIONAL TRADE."

NOTES

1. WRAP ITEM IN REF.-3 AND PLACE IN BARRIER BAG, REF.-2. REMOVE AIR AND SEAL.

2. CUSHION BAG WITH REF.-1 TO PREVENT BAGGED ITEM FROM CONTACTING BOX AND PREVENT MOVEMENT.

3. MAY PLACE UP TO 20 BAGGED ITEMS IN SHIPPING CONTAINER.

SPECIAL PACKAGING INSTRUCTION	CODE ID 98747	SPI NO. (TPO) F01-271-7161
ITEM NOMENCLATURE INITIATOR, PROPELLANT ACTUATED		SHEET 4 OF 6

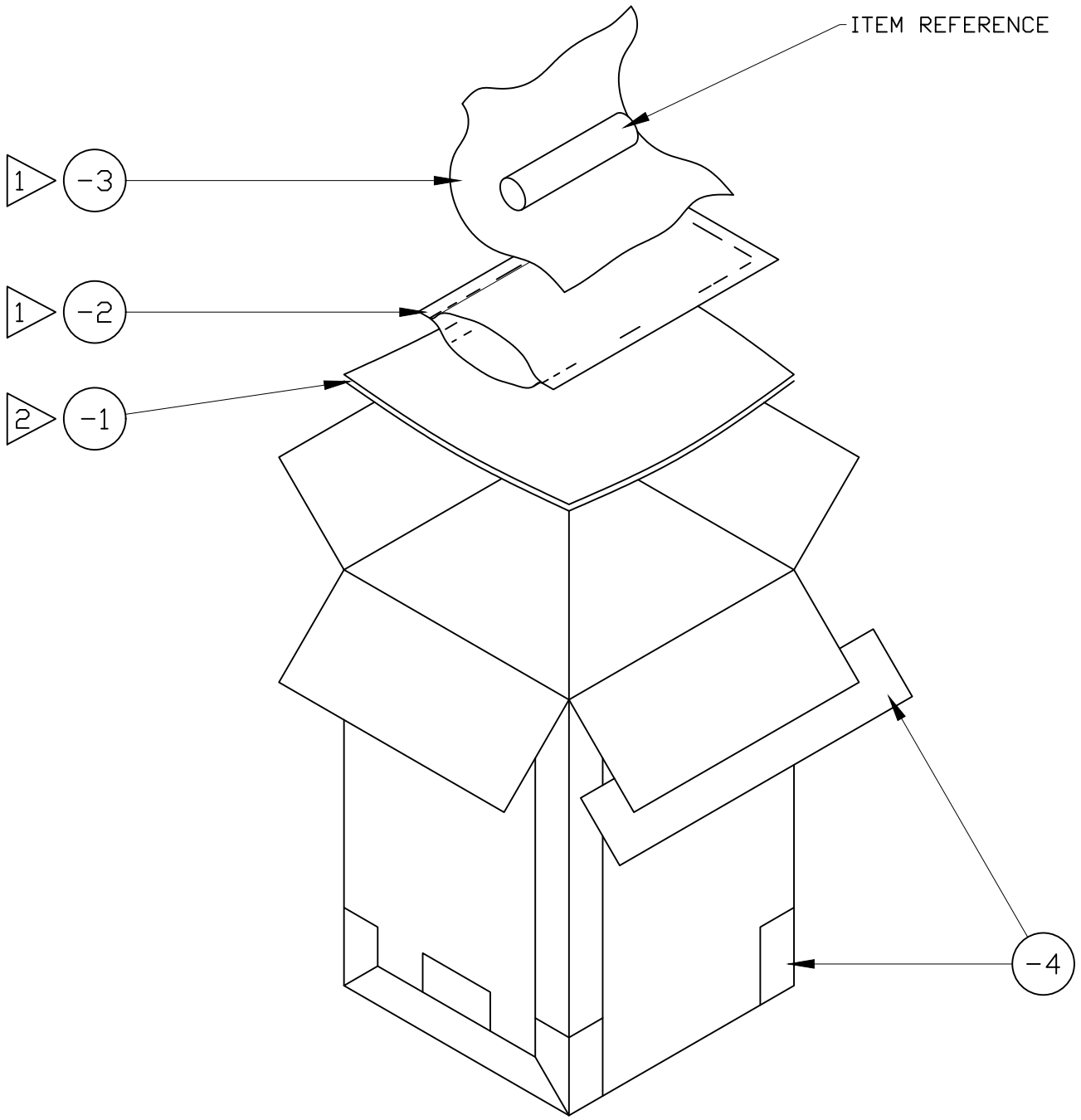

SPECIAL PACKAGING INSTRUCTION	CODE ID 98747	SPI NO. (TPO) F01-271-7161
ITEM NOMENCLATURE INITIATOR, PROPELLANT ACTUATED		SHEET 5 OF 6

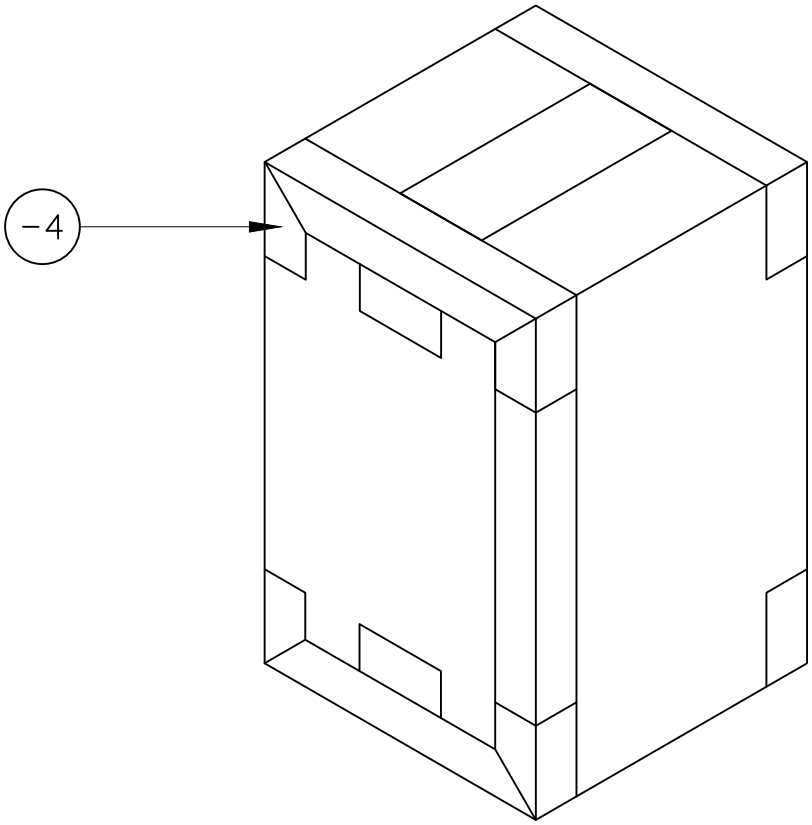

CLOSURE

SPECIAL PACKAGING INSTRUCTION	CODE ID 98747	SPI NO. (TPO) F01-271-7161
ITEM NOMENCLATURE INITIATOR, PROPELLANT ACTUATED		SHEET 6 OF 6

PALLETIZATION PROCEDURE FOR LEVEL B PACK

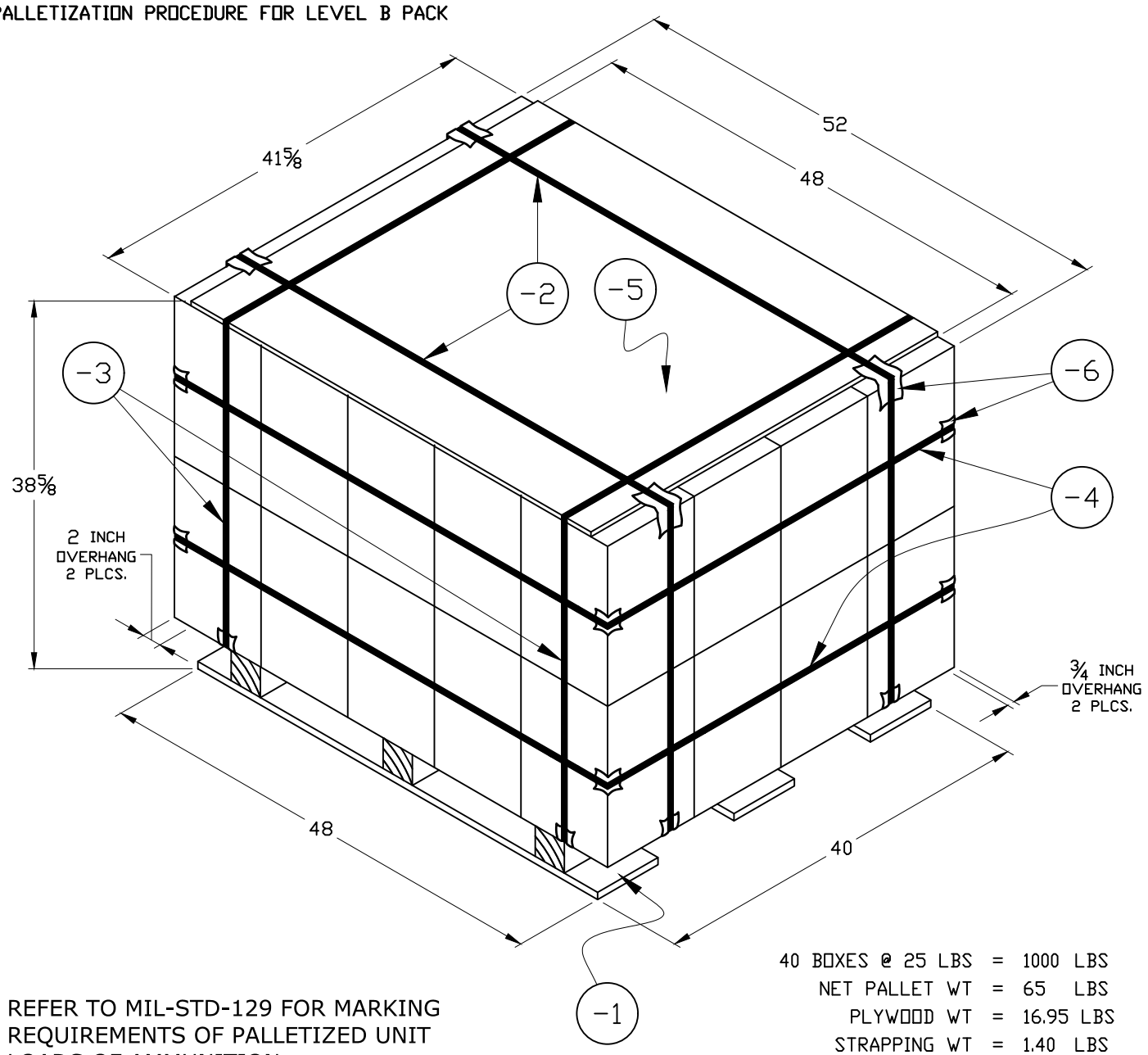

REFER TO MIL-STD-129 FOR MARKING REQUIREMENTS OF PALLETIZED UNIT LOADS OF AMMUNITION.

40 BOXES @ 25 LBS	=	1000 LBS
NET PALLET WT	=	65 LBS
PLYWOOD WT	=	16.95 LBS
STRAPPING WT	=	1.40 LBS
		1083.35 LBS

CUBE OF PALETIZED LOAD = 48.4

P/N	QTY REQD	NOMENCLATURE OR DESCRIPTION	SIZE: (INCHES UNLESS SPECIFIED) TOLERANCES ON FRAC. ± 1/8, DECIMAL ± .10, ANGLES ± 1°	MATERIAL SPECIFICATION
-6	20	EDGE PROTECTORS	AS MANUFACTURED	NSN 8135-00-145-0070 (OR EQUAL)
-5	1	PLYWOOD	48 X 41 5/8 X 3/8	A-A-55057 TYPE A
-4	2	STRAPPING, STEEL	3/4 X .015 (MIN) X AS REQD.	ASTM D3953 TYPE 1, REG DUTY, FIN B, GRADE 2
-3	2	STRAPPING, STEEL	3/4 X .015 (MIN) X AS REQD.	ASTM D3953 TYPE 1, REG DUTY, FIN B, GRADE 2
-2	2	STRAPPING, STEEL	3/4 X .015 (MIN) X AS REQD.	ASTM D3953 TYPE 1, REG DUTY, FIN B, GRADE 2
-1	1	PALLET, 4-WAY ENTRY	40 X 48	MIL-DTL-15011 TYPE I, CLASS 1, STYLE 1

SPECIAL PACKAGING INSTRUCTION

CODE ID	SPI NO. (TPO)	
98747	F01-455-1511	SHEET 1 OF 5

PART OR DRAWING NO.	NATIONAL STOCK NO.	CURRENT REV	
MULTIPLE PART NUMBERS	1377-01-455-1511 ES	C	ILL. D. NAY
ITEM NOMENCLATURE		ORIGINAL DATE	P.S. J. HARMON
SENSOR ASSEMBLY, CABIN		07038	CHK. J. BURLEIGH
			AUTH. N. CORONADO

DDDPOPHM/USA/DOD/AF70/TR14002

MILITARY PRESERVATION IAW MIL-STD-2073

SERVICEABLE METHOD: 41
UNSERVICEABLE METHOD: 41
QUP 001 ▷2
ICQ 000
CLEANING & DRYING: IAW MIL-STD-2073
PRESERVATIVE: N/A

MARKING IAW MIL-STD-129

SPECIAL MARKINGS:

A) SPI NO. F01-455-1511
MARK THE SPI NUMBER ON THE IDENTIFICATION SIDE OF CONTAINER.

B) PROPER SHIPPING NAME: CARTRIDGES, POWER DEVICE UN0276

C) UN POP MARKING: (UN) 4G/Y25/S/**
USA/DOD/AF70

**THE LAST TWO DIGITS OF THE YEAR DURING WHICH THE PACKAGING WAS MANUFACTURED.

D) REUSABLE CONTAINER & DUNNAGE DO NOT DESTROY.

NOTE: THE ABOVE POP MARKINGS ARE FOR DOD USE ONLY.

CLOSURE:

LEVEL A: IAW ASTM D6251
LEVEL B: IAW ASTM D1974 SEALING METHOD C

PACKING AS SPECIFIED BELOW AND BILL OF MATERIALS

LEVEL	SPEC	STYLE	TYPE	CL	VRTY	GR	TR
A	ASTM D6251	A	III	2			B
B	ASTM D5118	RSC				V3c	

	LEVEL A	LEVEL B
GROSS CU FT	SEE NOTICE 1	1.043
GROSS WT LBS	SEE NOTICE 1	15
DESIGN FRAGILITY G	80	80

	LENGTH	WIDTH	DEPTH
CNTR I.D.			
LEVEL A:	SEE NOTICE 1		
LEVEL B:	10	10	16
CNTR O.D.			
LEVEL A:	SEE NOTICE 1		
LEVEL B:	10 3/8	10 3/8	16 3/4
ITEM DIM	VARIES		
ITEM WT.	VARIES		

REVISIONS		
LTR	DESCRIPTION	DATE
C	ADDED DISTRIBUTION STATEMENT AND DESTRUCTION NOTICE. ALIGNED BOM WITH DRAWING	18156

DISTRIBUTION STATEMENT D: DISTRIBUTION AUTHORIZED TO DEPARTMENT OF DEFENSE AND U.S. DOD CONTRACTORS ONLY, ADMINISTRATIVE OR OPERATIONAL USE, 04 JUNE 2018. OTHER REQUESTS FOR THIS DOCUMENT SHALL BE REFERRED TO 406 SCMS/GULAA, (PACKAGING DIVISION), HILL AFB, UTAH 84056.

DESTRUCTION NOTICE: FOLLOW THE PROCEDURES IN DOD 5220.22-M, NATIONAL INDUSTRIAL SECURITY PROGRAM OPERATING MANUAL (NISPOM), SECTION 5-705, OR DOD 5200.1-R, INFORMATION SECURITY PROGRAM, CHAPTER VI. FOR UNCLASSIFIED, LIMITED DOCUMENTS, DESTROY BY ANY METHOD THAT WILL PREVENT DISCLOSURE OF CONTENTS OR RECONSTRUCTION OF THE DOCUMENT.

SPI NO. F01-455-1511

SPECIAL PACKAGING INSTRUCTION	CODE ID 98747	SPI NO. (TPO) F01-455-1511
ITEM NOMENCLATURE SENSOR ASSEMBLY, CABIN		SHEET 2 OF 5

P/N	QTY REQD	NOMENCLATURE OR DESCRIPTION	SIZE: (INCHES UNLESS SPECIFIED) TOLERANCES ON FRAC. ± 1/8, DECIMAL ± .10, ANGLES ± 1°	MATERIAL SPECIFICATION	
-4	A/R	PACKAGING TAPE	3 X AS REQUIRED	ASTM D5486 TYPE I OR V	3
-3	A/R	WRAP	AS REQUIRED	A-A-59135 CLASS 1, GRADE B	1
-2	1	BARRIER BAG	19 X 10 (ID)	MIL-DTL-117 TYPE I, CLASS F, STYLE 1	2
-1	A/R	CUSHIONING	AS REQUIRED	A-A-1898 GRADE II, CLASS B OR EQUAL	2

MUNITION NOTICES

NOTICE 1: FOR LEVEL A PACKING REQUIREMENTS: THE LEVEL B PACKS SHALL BE OVERBOXED IN A LEVEL A SPECIFIED CONTAINER SHOWN ON PAGE 1 UNDER PACKAGING LEVEL A. MARK THE OUTSIDE OF THE OVERBOX "OVERPACK." THE SIZE AND WEIGHT OF THE OVERBOX WILL VARY DEPENDING ON THE NUMBER OF ITEMS BEING SHIPPED. USE FILLER PAD OF ASTM-D4727, CF, DOM, GR 275 (OR EQUAL) TO ENSURE A TIGHT FIT IN THE OVERBOX.

NOTICE 2: ASSETS PACKAGED IN ACCORDANCE WITH PREVIOUS EDITIONS OF THIS SPI DO NOT REQUIRE REPACKAGING IF THE INTEGRITY OF THE SPI IS MAINTAINED.

NOTICE 3: SEE SPIRES FOR A COMPLETE LISTING OF NSN's ASSIGNED TO THIS SPI.

NOTICE 4: THIS SPI IS NOT AUTHORIZED FOR USE WITHOUT PROPER HAZARD CLASSIFICATION. UNLESS A FINAL HAZARD CLASSIFICATION HAS BEEN ISSUED, A COPY OF THE VALID INTERIM HAZARD CLASSIFICATION LETTER ALONG WITH DOT SP 15448 MUST ACCOMPANY EACH SHIPMENT.

INTERNATIONAL STANDARDS FOR PHYTOSANITARY MEASURES
REVISION OF ISPM NO. 15
REVISION OF WOOD PACKAGING MATERIAL FOR INTERNATIONAL TRADE

THE FOLLOWING STATEMENT IS IN COMPLIANCE WITH THE UNITED NATIONS-IMPLEMENTED RESTRICTIONS ON WOOD PACKAGING MATERIAL (WPM). THIS REQUIREMENT IS SPECIFICALLY CONCERNED WITH INVASIVE SPECIES SUCH AS THE PINEWOOD NEMATODE. WPM IS DEFINED AS WOOD PALLETS, SKIDS, LOAD BOARDS, PALLET COLLARS, WOODEN BOXES, REELS, DUNNAGE, CRATES, FRAMES, AND CLEATS. THE STATEMENT BELOW CITES THE REQUIREMENTS IN DETAIL AND COVERS LUMBER FOR BUILDING CONTAINERS AND PALLETS USED FOR DELIVERIES, RESULTING IN SHIPMENTS WORLDWIDE (DIRECT, OR THROUGH AIR LOGISTICS CENTERS (ALC), CONTAINER CONSOLIDATION POINTS (CCP), OR OTHER BASES).

WOODEN LUMBER, WOODEN PALLET AND PACKAGING/CONTAINER STATEMENT:

ALL WOODEN LUMBER, WOODEN PALLETS, AND WOODEN CONTAINERS PRODUCED ENTIRELY OR IN PART OF WOOD PACKAGING MATERIAL (WPM) SHALL BE CONSTRUCTED FROM DEBARKED WOOD IN ADDITION TO THE APPLICATION OF HEAT-TREATED (HT) MATERIAL (HT TO 56 DEGREES CENTIGRADE OR 133 DEGREES FAHRENHEIT FOR 30 MINUTES). CERTIFICATION/MARKING IS REQUIRED BY AN ACCREDITED AGENCY RECOGNIZED BY THE AMERICAN LUMBER STANDARDS COMMITTEE (ALSC). FOR REFERENCE DOCUMENTATION, SEE LATEST REVISION OF "INTERNATIONAL STANDARDS FOR PHYTOSANITARY MEASURES (ISPM NO. 15), "REGULATION OF WOOD PACKAGING MATERIAL IN INTERNATIONAL TRADE."

NOTES

1. WRAP EACH ITEM IN CUSHIONING, REF.-3, PLACE IN BAG, REF.-2, REMOVE AIR AND SEAL.

2. PLACE UP TO 6 ITEMS IN SHIPPING CONTAINER, ADD CUSHIONING, REF.-1, AS REQUIRED TO ENSURE SNUG FIT AND TO PREVENT ITEMS FROM CONTACTING SIDES.

3. CLOSE AND TAPE CONTAINER WITH REF.-4.

SPECIAL PACKAGING INSTRUCTION	CODE ID 98747	SPI NO. (TPO) F01-455-1511
ITEM NOMENCLATURE SENSOR ASSEMBLY, CABIN		SHEET 4 OF 5

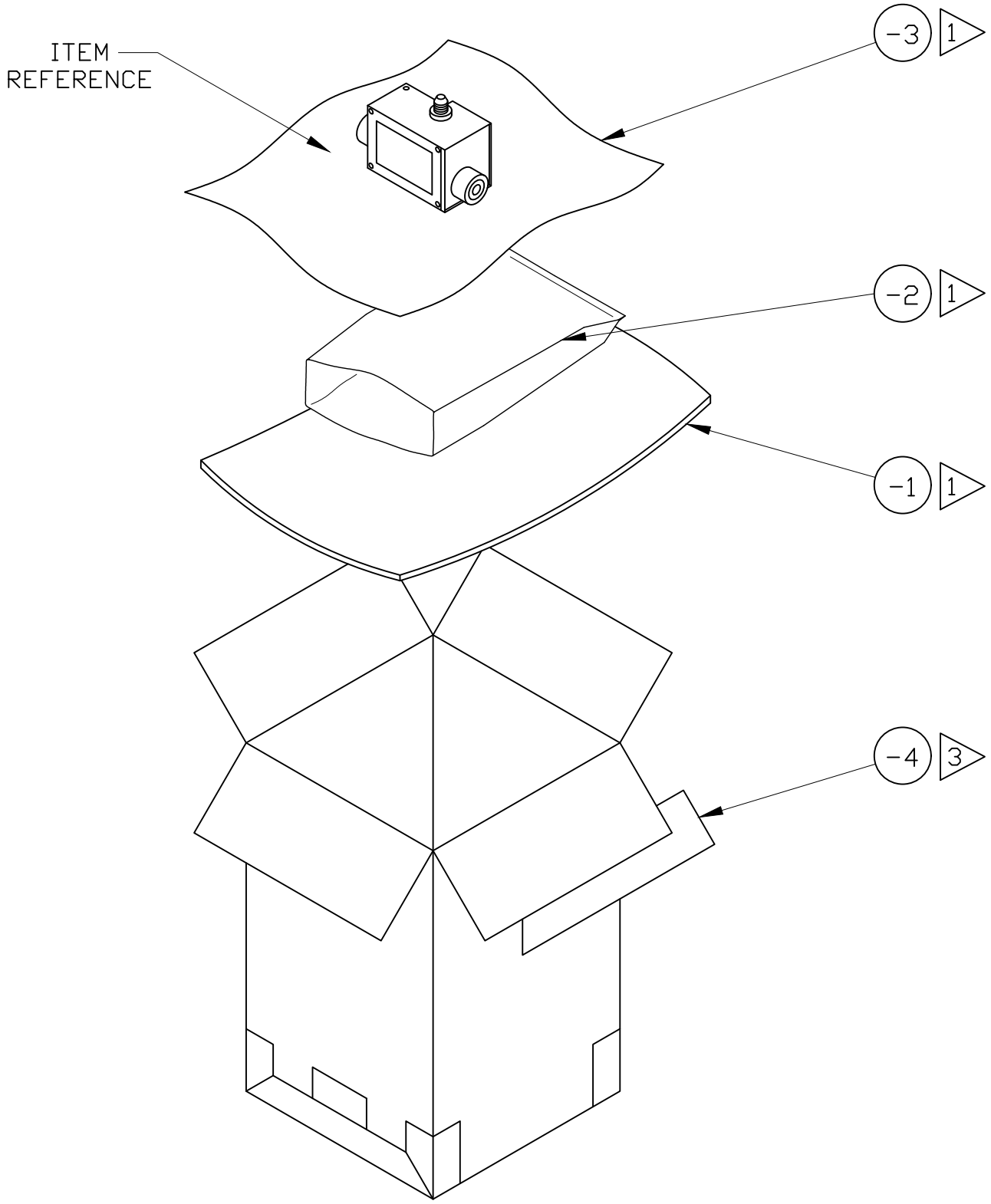

SPECIAL PACKAGING INSTRUCTION	CODE ID 98747	SPI NO. (TPO) F01-455-1511
ITEM NOMENCLATURE SENSOR ASSEMBLY, CABIN		SHEET 5 OF 5

PALLETIZATION PROCEDURE FOR LEVEL B PACK

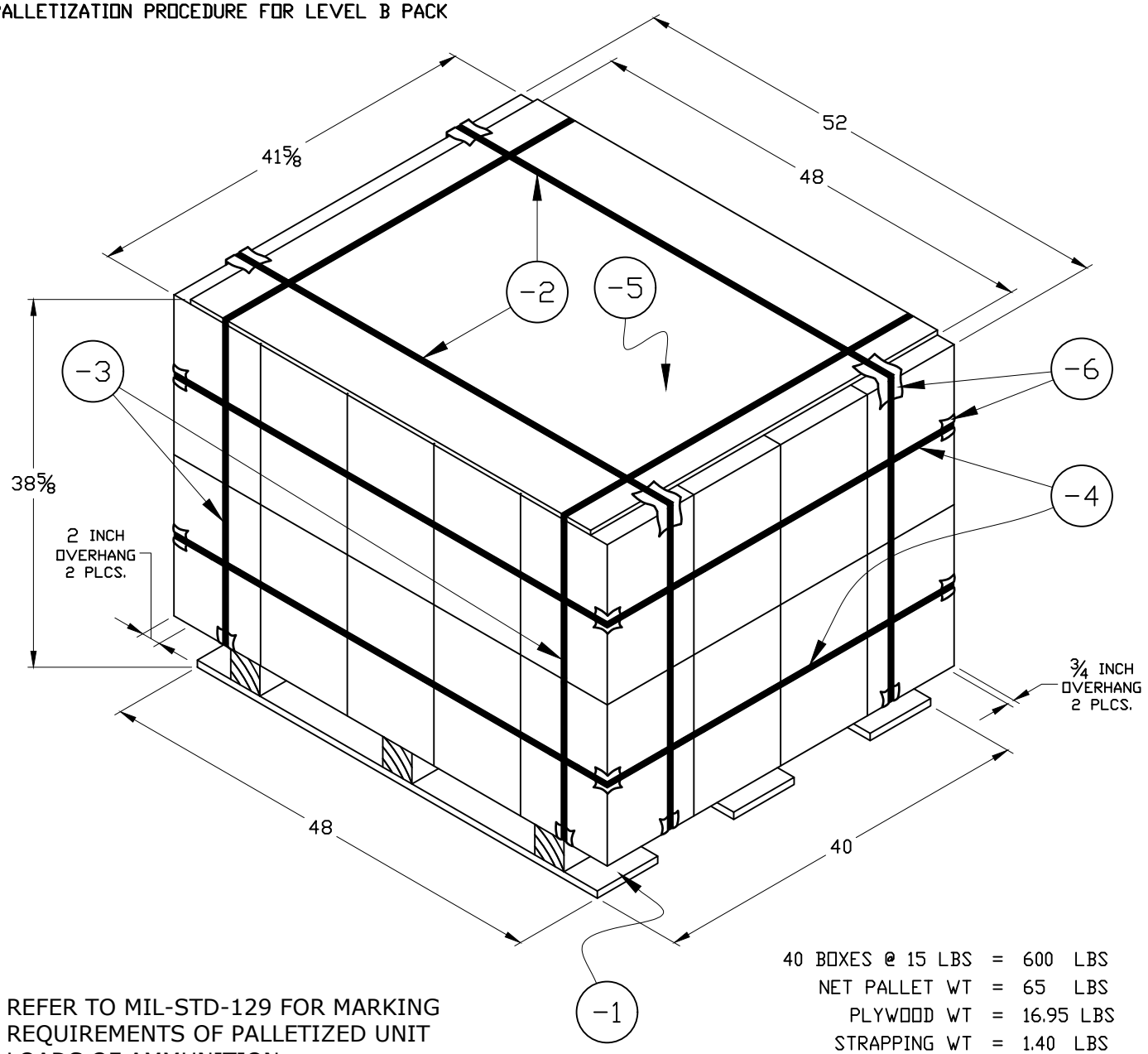

REFER TO MIL-STD-129 FOR MARKING REQUIREMENTS OF PALLETIZED UNIT LOADS OF AMMUNITION.

40 BOXES @ 15 LBS	=	600 LBS
NET PALLET WT	=	65 LBS
PLYWOOD WT	=	16.95 LBS
STRAPPING WT	=	1.40 LBS
		683.35 LBS

CUBE OF PALETIZED LOAD = 48.4

P/N	QTY REQD	NOMENCLATURE OR DESCRIPTION	SIZE: (INCHES UNLESS SPECIFIED) TOLERANCES ON FRAC. ± 1/8, DECIMAL ± .10, ANGLES ± 1°	MATERIAL SPECIFICATION
-6	20	EDGE PROTECTORS	AS MANUFACTURED	NSN 8135-00-145-0070 (OR EQUAL)
-5	1	PLYWOOD	48 X 41 5/8 X 3/8	A-A-55057 TYPE A
-4	2	STRAPPING, STEEL & SEALS	206 X 3/4 X .023	ASTM D3953 TYPE 1, REG DUTY, FIN B, GRADE 2
-3	2	STRAPPING, STEEL & SEALS	173 X 3/4 X .023	ASTM D3953 TYPE 1, REG DUTY, FIN B, GRADE 2
-2	2	STRAPPING, STEEL & SEALS	190 X 3/4 X .023	ASTM D3953 TYPE 1, REG DUTY, FIN B, GRADE 2
-1	1	PALLET, 4-WAY ENTRY	40 X 48	MIL-DTL-15011 STYLE 1, SIZE A, TYPE I, CLASS 1