ELECTRICAL ABBREVIATIONS

A	A	AMPERES
	AC	ALTERNATING CURRENT
	AF	AMPERE FRAME (BREAKER RATING)
	AFC	ABOVE FINISHED COUNTER
	AFF	ABOVE FINISHED FLOOR
	AFG	ABOVE FINISHED GRADE
	AHU	AIR HANDLING UNIT
	AIC	AMPERE INTERRUPTING CAPACITY
	ALT	ALTERNATE
	ARCH	ARCHITECT
	AT	AMPERES TRIP
	ATS	AUTOMATIC TRANSFER SWITCH
	AUTO	AUTOMATIC
	AUX	AUXILIARY
	AWG	AMERICAN WIRE GAUGE
B	BLDG	BUILDING
	BRKR, BKR	BREAKER
C	C	CONDUIT
	CATV	CABLE TELEVISION
	CB	CIRCUIT BREAKER
	CCTV	CLOSED CIRCUIT TELEVISION
	CE	CONTROLLED EMERGENCY
	CKT	CIRCUIT
	CLG	CEILING
	COM, COMM	COMMUNICATIONS
	COPY	COPIER
	CP	CONTROL PANEL
	CPT	CONTROL POWER TRANSFORMER
	CT	CURRENT TRANSFORMER
	CU	COPPER
D	DC	DIRECT CURRENT
	DISC	DISCONNECT
	DIST	DISTRIBUTION
	DIV	DIVISION
	DN	DOWN
	DP	DISTRIBUTION PANEL
	DPDT	DOUBLE POLE DOUBLE THROW
	DPST	DOUBLE POLE SINGLE THROW
	DW	DISHWASHER
	DWG	DRAWING
E	E, EX, EXIST	EXISTING
	EG	EQUIPMENT GROUND
	ELEC	ELECTRIC, ELECTRICAL
	ELEV	ELEVATOR
	EM. EMEG	EMERGENCY
	EMT	ELECTRIC METALLIC CONDUIT
	ENCL	ENCLOSURE
	EO	ELECTRICALLY OPERATED
	EQ, EQIP	EQUIPMENT
	EWC	ELECTRIC WATER COOLER
	EWH	ELECTRIC WATER HEATER
F	F	FUSE
	FA	FIRE ALARM
	FAAP	FIRE ALARM ANNUNCIATOR PANEL
	FACP	FIRE ALARM CONTROL PANEL
	FAEP	FIRE ALARM EXTENDER PANEL
	FC	FOOT CANDLE
	FDR	FEEDER
	FESS	FLYWHEEL ENERGY STORAGE SYSTEM
	FL, FLR	FLOOR
	FLA	FULL LOAD AMPS
	FLEX	FLEXIBLE
	FLUOR	FLUORESCENT
	FS	FLUSH SENSOR
	FT	FOOT / FEET (')
	FTL	FEED THROUGH LUGS
G	G, GND, GRD	GROUND
	GEN	GENERATOR
	GFCI	GROUND FAULT CIRCUIT INTERRUPTER
	GFI	GROUND FAULT INTERRUPTER
H	H	HORIZONTAL MOUNTING
	HH	HAND HOLE
	HOA	HAND-OFF-AUTOMATIC
	HP	HORSEPOWER
	HPS	HIGH PRESSURE SODIUM
	HR	HOUR
	HT	HEIGHT
	HTR	HEATER
	HVAC	HEATING VENTILATION AND AIR CONDITIONING
	HZ	HERTZ
I	IG	ISOLATED GROUND
	IN	INCH / INCHES (")
	INCAND	INCANDESCENT
J	JB, JBOX	JUNCTION BOX
K	K	KEY INTERLOCK
	Kcmil	1000 CIRCULAR mils
	KV	KILOVOLTS (THOUSAND VOLTS)
	KVA	KILOVOLTS-AMPERES (THOUSAND VOLT-AMPS)
	kW	KILOWATTS (THOUSAND WATTS)
	KWH	KILOWATT-HOURS
	L-G	LINE TO GROUND
	L-L	LINE TO LINE
	L-N	LINE TO NEUTRAL
L	LA	LIGHTNING ARRESTOR
	LAN	LOCAL AREA NETWORK
	LC, LCP	LIGHTING CONTROL PANEL
	LP	LIGHTING PANEL
	LS	LAVATORY SENSOR
	LSI	LONG-TIME, SHORT-TIME, INSTANTANEOUS
	LSIA	LONG-TIME, SHORT-TIME, INSTANTANEOUS,GROUND-FAULT ALARM ONLY
	LSIG	LONG-TIME, SHORT-TIME, INSTANTANEOUS,GROUND-FAULT
	LTG	LIGHTING
	LV	LOW VOLTAGE (BELOW 50 VOLTS)
M	MCA	MINIMUM CIRCUIT AMPACITY
	MCB	MAIN CIRCUIT BREAKER
	MCC	MOTOR CONTROL CENTER
	MECH	MECHANICAL
	MFR	MANUFACTURER
	MH	MANHOLE
	MIN	MINIMUM
	MISC	MISCELLANEOUS
	MLO	MAIN LUGS ONLY
	MOCP	MAXIMUM OVERCURRENT PROTECTION
	MTD	MOUNTED
	MTG	MOUNTING
	MTS	MANUAL TRANSFER SWITCH
	MV	MEDIUM VOLTAGE (OVER 600V LESS THAN 35KV)
N	N	NEUTRAL
	NC	NORMALLY CLOSED
	NEC	NATIONAL ELECTRICAL CODE
	NEMA	NATIONAL ELECTRICAL MANUFACTURERS ASSOCIATION
	NIC	NOT IN CONTRACT
	NL	NIGHTLIGHT
	NO	NORMALLY OPEN
	NO., NUM. #	NUMBER
	NTS	NOT TO SCALE
O	OC	ON CENTER
	OCPD	OVERCURRENT PROTECTION DEVICE
	OFCI	OWNER FURNISHED, CONTRACTOR INSTALLED
	OFOI	OWNER FURNISHED, OWNER INSTALLED
	OH	OVERHEAD
	OHD	OVERHEAD DOOR
	OHE/T	OVERHEAD ELECTRIC/TELEPHONE
	OPP	OPPOSITE
P	P	POLE
	PA	PUBLIC ADDRESS
	PB	PULL BOX
	PDP	POWER DISTRIBUTION PANEL
	PE	PHOTO ELECTRIC
	PF	POWER FACTOR
	PH, Ø	PHASE
	PNL	PANEL
	PRI	PRIMARY
	PT	POTENTIAL TRANSFORMER
	PV	PHOTOVOLTAIC
	PVC	POLYVINYL CHLORIDE
	PWR	POWER
Q	QTY	QUANTITY
R	R, RE	RELOCATE AS SHOWN
	RCLP	REMOTE CONTROL LIGHTING PANEL
	RCPT	RECEPTACLE
	REF	REFRIGERATOR
	RF	RADIO FREQUENCY
	RGB	RED, GREEN, BLUE (COLOR CHANGING)
	RLA	RATED (RUNNING) LOAD AMPS
	RM	ROOM
	RP	RECEPTACLE PANELBOARD
	RSC	RIGID STEEL CONDUIT
S	SCH, SCHED	SCHEDULE
	SEC	SECONDARY
	SES	SERVICE ENTRANCE SECTION
	SF	SQUARE FOOT
	SPD	SURGE PROTECTIVE DEVICE
	SPDT	SINGLE POLE DOUBLE THROW
	SPEC(S)	SPECIFICATION(S)
	SPKR	SPEAKER
	SPST	SINGLE POLE SINGLE THROW
	STD	STANDARD
	SW	SWITCH
	SWBD	SWITCHBOARD
	SWGR	SWITCHGEAR
	SYM	SYMMETRICAL
T	T	TAMPER RESISTANT
	TB	TERMINAL BLOCK
	TBB	TELEPHONE BACKBOARD
	TC	TIME CLOCK
	TEL, TELE	TELEPHONE
	TELECOM	TELECOMMUNICATIONS
	TP	TAMPERPROOF
	TV	TELEVISION
	TYP	TYPICAL
U	UG	UNDERGROUND
	UGP	UNDERGROUND PRIMARY
	UGS	UNDERGROUND SECONDARY
	UGT	UNDERGROUND TELEPHONE
	UL	UNDERWRITER'S LABORATORY
	UON	UNLESS OTHERWISE NOTED
	UPS	UNINTERRUPTIBLE POWER SUPPLY
V	V	VOLTS
	VA	VOLT-AMPERES
	VFD	VARIABLE FREQUENCY DRIVE/ VARIABLE FREQUENCY MOTOR CONTROLLER
W	W	WIRE
	W/	WITH
	W/O	WITHOUT
	WHM	WATT HOUR METER
	WP	WEATHERPROOF
	WR	WEATHER RESISTANT RATED RECEPTACLE & WEATHER PROOF METAL IN-USE COVER
X	X	REMOVE DEVICE
	XFMR	TRANSFORMER
Z	%Z	PERCENT IMPEDANCE

ALL ABBREVIATIONS, SYMBOLS AND LEGENDS SHOWN ON THIS DRAWING ARE NOT NECESSARILY USED.

ELECTRICAL LIGHTING SYMBOLS

- WALL MOUNTED LIGHTING FIXTURE- TYPE AS INDICATED
- a — LIGHTING FIXTURE - TYPE AS INDICATED (SUBSCRIPT INDICATES SWITCH CONTROL)
- LIGHTING FIXTURE - TYPE AS INDICATED
- WALLWASH LIGHT FIXTURE
- EM / EM — HALF SHADING INDICATES FIXTURE CONNECTED TO CRITICAL BRANCH SUBSCRIPT EM INDICATES INTEGRAL BATTERY UNIT
- NL / NL — SHADING INDICATES FIXTURE CONNECTED TO LIFE SAFETY BRANCH SUBSCRIPT EM INDICATES INTEGRAL BATTERY UNIT SUBSCRIPT NL INDICATES FIXTURE TO OPERATE AS UNSWITCHED NIGHT LIGHT
- LIGHTING TRACK - "X" DENOTES TYPE
- EXIT LIGHT - WALL/CEILING MOUNTED - DIRECTIONAL ARROWS AS INDICATED SHADING INDICATES ILLUMINATED FACE
- SITE LIGHTING FIXTURE TYPE AS INDICATED
- XX — LIGHTING FIXTURE TYPE DESIGNATION - "XX" INDICATES SPECIFIC TYPE REFER TO LIGHT FIXTURE SCHEDULE
- SINGLE OR DOUBLE, REMOTE EMERGENCY LIGHTING FIXTURE
- $3 — THREE-WAY SWITCH (S3P-THREE-WAY SWITCH WITH PILOT LIGHT)
- $4 — FOUR - WAY SWITCH
- $EM — REMOTE TEST SWITCH FOR LIGHT FIXTURES EQUIPPED WITH INTEGRAL BATTERIES
- $MED — SENSORSWITCH NIGHTINGALE 4 BUTTON DIMMER FOR PATIENT ROOMS
- $$ $3$3 — DUAL LEVEL SWITCHING. PROVIDE BALLASTS/DRIVERS REQUIRED TO PROVIDE DUAL LEVEL SWITCHING.
- $L — LOW VOLTAGE SWITCH
- $L1 — SINGLE ZONE LOW VOLTAGE ON/OFF SWITCH
- $L1D — SINGLE ZONE LOW VOLTAGE DIMMER SWITCH
- $L2 — 2 ZONE LOW VOLTAGE ON/OFF SWITCH
- $L2D — 2 ZONE LOW VOLTAGE DIMMER SWITCH
- $L4 — 4 ZONE LOW VOLTAGE ON/OFF SWITCH
- $L4D — 4 ZONE LOW VOLTAGE DIMMER SWITCH
- $TS — NICOLAUDIE ARCHITECTURAL STICK-DE3 TOUCH SCREEN CONTROL KEYPAD FOR USE WITH DMX FIXTURES
- $DT — PASSIVE INFRARED/ULTRASONIC OCCUPANCY SENSOR
- $DTD — PASSIVE INFRARED/ULTRASONIC OCCUPANCY SENSOR DIMMER
- PI PI — PASSIVE INFRARED OCCUPANCY SENSOR (WALL/CEILING)
- D2 D2 — PASSIVE INFRARED/ULTRASONIC OCCUPANCY SENSOR, 2 POLE (WALL/CEILING)
- DT DT — PASSIVE INFRARED/ULTRASONIC OCCUPANCY SENSOR (WALL/CEILING)
- PH — PHOTO CELL
- CS — COMBINATION PHOTOCELL/OCCUPANCY SENSOR
- ELTD — EMERGENCY LIGHTING TRANSFER DEVICE

DISTRIBUTION AND DIAGRAM SYMBOLS

- SWITCH - SINGLE THROW
- FUSED SWITCH
- T — TRANSFORMER - TYPE AND RATING AS INDICATED
- POTENTIAL TRANSFORMER
- CPT — CONTROL POWER TRANSFORMER
- CURRENT TRANSFORMER
- DELTA CONNECTION
- WYE CONNECTION - SOLID GROUND
- E — ELECTRIC INTERLOCK SYSTEM
- K — KEY INTERLOCKING SYSTEM
- DRAWOUT TYPE, CIRCUIT BREAKER
- STATIONARY CIRCUIT BREAKER (G)
- PLUG-IN CIRCUIT BREAKER, IP20 RATED, TOUCH SAFE BARRIER
- FUSE
- ATS — AUTOMATIC TRANSFER SWITCH
- BUS DUCT PLUG-IN UNIT
- LIGHTNING ARRESTOR
- GROUND
- M / EMU — ELECTRONIC METERING UNIT
- sM / sEMU — ELECTRONIC SUB METERING UNIT
- SPD — SURGE PROTECTIVE DEVICE
- DISTRIBUTION PANELBOARD
- PANELBOARD - (FLUSH/SURFACE)
- LCP — LIGHTING CONTROL PANEL, SURFACE MTD. UON.
- RPX — LOW VOLTAGE LIGHTING RELAY PANEL, SURFACE MTD. UON (X IS A VARIABLE LETTER BASED ON LEVEL AND AREA)
- UPS — UNINTERRUPTIBLE POWER SUPPLY
- RP-XXXX — SYMBOL INDICATES TO WHICH PANELBOARD INDICATED CIRCUITS IN THE ROOM ARE TO BE CONNECTED.
- GAP — GENERATOR ANNUNCIATOR (DERANGEMENT) PANEL
- G — GENERATOR

ELECTRICAL POWER SYMBOLS

- SINGLE RECEPTACLE, NEMA 5-20R (SLASH INDICATES MOUNTING ABOVE FINISH COUNTER)
- DUPLEX RECEPTACLE, NEMA 5-20R (SLASH INDICATES MOUNTING ABOVE FINISH COUNTER)
- GFCI, DUPLEX RECEPTACLE, NEMA 5-20R (SLASH INDICATES MOUNTING ABOVE FINISH COUNTER). THE GFCI MUST BE INSTALLED IN A READILY ACCESSIBLE LOCATION PER NEC 210.8.
- QUADRUPLEX RECEPTACLE, (2) NEMA 5-20R, DUPLEX RECEPTACLES WITH A COMMON FACEPLATE. (SLASH INDICATES MOUNTING ABOVE FINISH COUNTER)
- SINGLE RECEPTACLE, NEMA 5-20R, MOUNTED AT 24" AFF IN CLINICAL AREAS
- DUPLEX RECEPTACLE, NEMA 5-20R, MOUNTED AT 24" AFF IN CLINICAL AREAS
- QUADRUPLEX, (2)NEMA 5-20R, DUPLEX RECEPTACLES WITH A COMMON FACEPLATE, MOUNTED AT 24" AFF IN CLINICAL AREAS
- FULLY CONTROLLED DUPLEX/QUADRUPLEX RECEPTACLE, NEMA 5-20R. PROVIDE ALL WIRING, EQUIPMENT, POWER PACKS, AND OCCUPANCY SENSOR INTEGRATION REQUIRED TO TURN OFF RECEPTACLE(S) WHEN SPACE IS UNOCCUPIED.
- HALF CONTROLLED DUPLEX/QUADRUPLEX RECEPTACLE, NEMA 5-20R. PROVIDE ALL WIRING, EQUIPMENT, POWER PACKS, AND OCCUPANCY SENSOR INTEGRATION REQUIRED TO TURN OFF HALF OF RECEPTACLE(S) WHEN SPACE IS UNOCCUPIED.
- HALF SWITCHED DUPLEX RECEPTACLE, NEMA 5-20R
- EMERGENCY DUPLEX RECEPTACLE, NEMA 5-20R (SHADING INDICATING EMERGENCY RECEPTACLE TYPICAL FOR ALL OTHER RECEPTACLE TYPES)
- COMBINATION USB DUPLEX RECEPTACLE, NEMA 5-20R, WITH (2) 5VDC, 2.1A USB CHARGING PORTS
- 6-30R — SPECIAL PURPOSE RECEPTACLE. TYPE AS INDICATED ON DRAWINGS. COORDINATE RECEPTACLE TYPE WITH ACTUAL EQUIPMENT PRIOR TO INSTALLATION.
- CEILING MOUNTED SINGLE RECEPTACLE, NEMA 5-20R
- CEILING MOUNTED SINGLE ISOLATED GROUND RECEPTACLE, NEMA 5-20R
- CEILING MOUNTED DUPLEX RECEPTACLE, NEMA 5-20R ("CR" SUBSCRIPT INDICATES CORD REEL)
- CEILING MOUNTED DUPLEX ISOLATED GROUND RECEPTACLE, NEMA 5-20R
- CEILING MOUNTED QUADRUPLEX RECEPTACLE, (2) NEMA 5-20R, DUPLEX RECEPTACLES WITH A COMMON FACEPLATE.
- CEILING MOUNTED QUADRUPLEX ISOLATED GROUND RECEPTACLE, (2)NEMA 5-20R, DUPLEX ISOLATED GROUND RECEPTACLES WITH A COMMON FACEPLATE.
- RECEPTACLES MOUNTED ABOVE THE CEILING.
- SINGLE RECEPTACLE, NEMA 5-20R, FLOOR MTD SERVICE FITTING, FLUSH TYPE UON ("S" DENOTES SURFACE TYPE)
- SINGLE IG RECEPTACLE, NEMA 5-20R, FLOOR MTD SERVICE FITTING, FLUSH TYPE UON ("S" DENOTES SURFACE TYPE)
- DUPLEX RECEPTACLE, NEMA 5-20R, FLOOR MTD SERVICE FITTING, FLUSH TYPE UON ("S" DENOTES SURFACE TYPE)
- DUPLEX IG RECEPTACLE, NEMA 5-20R, FLOOR MTD SERVICE FITTING, FLUSH TYPE UON ("S" DENOTES SURFACE TYPE)
- QUADRUPLEX RECEPTACLE, (2) NEMA 5-20R, FLOOR MTD SERVICE FITTING, FLUSH TYPE UON ("S" DENOTES SURFACE TYPE)
- QUADRUPLEX IG RECEPTACLE, (2) NEMA 5-20R, FLOOR MTD SERVICE FITTING, FLUSH TYPE UON ("S" DENOTES SURFACE TYPE)
- WHERE INDICATED IN AN EXISTING FLOOR, PROVIDE CORE DRILL PACKAGE TO MAINTAIN FIRE RATING OF FLOOR. EXTEND CONDUIT AND WIRING IN CEILING SPACE OF FLOOR BELOW TO ELECTRICAL CLOSET OR PANELBOARD.
- FBX — FLOOR BOX ("X" DENOTES TYPE AS SPECIFIED)
- PTX — POKE-THROUGH ASSEMBLY ("X" DENOTES TYPE AS SPECIFIED)
- AFX — ACCESS FLOOR BOX ("X" DENOTES TYPE AS SPECIFIED)
- REFER TO FLOOR BOX / POKE-THROUGH SCHEDULE FOR TYPES.
- J J J — JUNCTION BOX (CEILING, FLOOR OR WALL MOUNTED) INDICATED IN POWER, LIGHTING & FIRE ALARM SYSTEMS PLANS.
- DIRECT CONNECTION TO EQUIPMENT
- P P P — POWER SERVICE FITTING (CEILING, FLOOR OR WALL MOUNTED) FOR CONNECTION TO FURNITURE SYSTEM AS SPECIFIED.
- SURFACE RACEWAY (FILLED SPACES DENOTE RECEPTACLE LOCATIONS)
- HC — ADA DOOR ACTUATOR
- PD PD PD — COMBINATION POWER AND TELECOMMUNICATIONS BOX (CEILING, FLOOR OR WALL MOUNTED) FOR POWER AND DATA CONNECTION INDICATED IN POWER & SPECIAL SYSTEMS PLANS.
- FG — BLANK FACE GFCI MODULE WITH VISUAL AND AUDIBLE ALARM, EATON #SGFDA20W, OR EQUIVALENT. MOUNTED AT 44" AFF. INSTALL IN A READILY ACCESSIBLE LOCATION AND CONNECT TO A RECEPTACLE REQUIRING GFCI PROTECTION THAT IS NOT IN A READILY ACCESSIBLE LOCATION.
- H-## — REFER TO CORRESPONDING ARCHITECTURAL HEADWALL ELEVATION FOR REQUIRED ELECTRICAL DEVICE PLACEMENT, A8 SERIES PLANS.

ELECTRICAL EQUIPMENT SYMBOLS

- MOTOR AND CONNECTION
- DISCONNECT SWITCH, NON-FUSED PROVIDE SWITCH AMPACITY EQUAL TO OR GREATER THAN FEEDER AMPACITY, UON
- DISCONNECT SWITCH, FUSED. PROVIDE SWITCH AND FUSE AMPACITY EQUAL TO OR GREATER THAN FEEDER AMPACITY, UON
- CB — CIRCUIT BREAKER IN NEMA 1 ENCLOSURE (FLUSH/SURFACE)
- COMBINATION MOTOR STARTER WITH DISCONNECT SWITCH. PROVIDE SWITCH AND FUSE AMPACITY EQUAL TO OR GREATER THAN FEEDER AMPACITY, UON
- HAND-OFF-AUTO SELECTOR SWITCH WITH PILOT LIGHT
- SM — MANUAL MOTOR STARTER WITH PILOT LIGHT AS INDICATED.
- PC — PACKAGE CONTROL UNIT (PROVIDED BY EQUIPMENT SUPPLIER)
- VFD — VARIABLE FREQUENCY DRIVE/VARIABLE FREQUENCY MOTOR CONTROLLER
- PUSHBUTTON STATION
- EMERGENCY POWER OFF
- C — CONTACTOR
- GROUNDING BUS BAR

ALL ABBREVIATIONS, SYMBOLS AND LEGENDS SHOWN ON THIS DRAWING ARE NOT NECESSARILY USED.

GENERAL NOTES

A. PROVIDE 1#12 + 1#12N + 1#12G FOR 20A BRANCH CIRCUITING, UON; MAXIMUM OF THREE CIRCUITS PER CONDUIT; MINIMUM CONDUIT SIZE OF 3/4" C, UON.

B. PROVIDE A DEDICATED NEUTRAL WIRE FOR EACH BRANCH CIRCUIT.

C. COORDINATE DEVICE LOCATIONS AND MOUNTING HEIGHTS WITH ARCHITECTURAL DRAWINGS PRIOR TO ROUGH-IN.

D. PROVIDE FIRE STOPPING FOR CONDUITS AND ELECTRICAL EQUIPMENT FOR FLOOR SLABS, WALLS AND CEILINGS TO MAINTAIN FIRE RATING.

E. INSTALL ELECTRICAL WORK IN ACCORDANCE WITH THE NATIONAL ELECTRICAL CODE AND LOCAL BUILDING AND FIRE CODES, IN A NEAT AND WORKMANLIKE MANNER.

F. LIMIT VOLTAGE DROP TO 2% FOR FEEDERS AND 3% FOR BRANCH CIRCUITS. INCLUDE DERATING FACTOR FOR ROOF-MOUNTED CONDUITS.

G. REFER TO ARCH. REFLECTED CEILING PLANS FOR EXACT LOCATION OF CEILING MOUNTED DEVICES AND LIGHT FIXTURES, UNLESS OTHERWISE INDICATED.

H. WHERE MULTIPLE SWITCHES, RECEPTACLES, AND OTHER OUTLETS (EXCEPT WALL PHONES) ARE INDICATED PROVIDE MULTI-GANG BACK BOXES WITH GANG BARRIERS AND A COMMON FACEPLATE.

I. WHERE DIFFERENT RECESSED ELECTRICAL DEVICES WITH THE SAME MOUNTING HEIGHTS ARE INDICATED SIDE-BY-SIDE, MOUNT THE DEVICES SO THAT THERE IS FOUR INCHES BETWEEN ADJACENT VERTICAL EDGES OF THE FACEPLATES, UON.

J. WHERE ELECTRICAL DEVICES WITH DIFFERENT MOUNTING HEIGHTS ARE LOCATED IN THE SAME AREA ALIGN DEVICES VERTICALLY THROUGH THEIR CENTERLINES, UON.

K. WHERE EXIT SIGNS ARE INDICATED ABOVE DOOR MOUNT AS FOLLOWS, CENTER THE EXIT SIGN BETWEEN TOP OF DOOR FRAME AND CEILING IF DISTANCE BETWEEN TOP OF DOOR FRAME AND CEILING IS 24 INCHES OR LESS; OTHERWISE MOUNT BOTTOM OF EXIT SIGN 6 INCHES FROM TOP OF DOOR FRAME, MOUNT OTHER WALL MOUNTED EXIT SIGNS IN THE SAME AREA AT THE SAME HEIGHT. COORDINATE WITH ARCHITECTURAL DETAILS.

L. EXIT SIGNS ARE TO BE TYPE "X1", UON.

M. PROVIDE SEPARATE NEUTRALS FOR DIMMING CIRCUITS.

N. PROVIDE FEEDERS AND BRANCH CIRCUITS WHICH HAVE AN AMPACITY EQUAL TO OR GREATER THAN THE CIRCUIT OVERCURRENT PROTECTIVE DEVICE RATING, U.O.N.

O. FURNITURE LAYOUTS ARE FOR REFERENCE ONLY. COORDINATE THE FINAL LOCATION OF ELECTRICAL DEVICES AND OUTLETS WITH ARCHITECT, OWNER AND FINAL FURNITURE PLANS PRIOR TO INSTALLATION.

P. MOUNT DEVICES FLUSH WITH CONCEALED CONDUIT, EXCEPT AS NOTED ON THE DRAWINGS AND IN MECHANICAL AND ELECTRICAL EQUIPMENT ROOMS.

Q. THE DRAWINGS REPRESENT ELECTRICAL DESIGN INTENT. THEY ARE DIAGRAMMATIC. PROVIDE ALL COMPONENTS NECESSARY FOR COMPLETE OPERATING ELECTRICAL SYSTEMS.

R. WHEN MORE THAN ONE 20A., 1P., 120 VOLT CIRCUIT FEEDS A SURFACE RACEWAY CONNECT RECEPTACLES TO ALTERNATE CIRCUITS AS FOLLOWS - U.O.N.

A B C A B C

MOUNTING HEIGHTS

ACCESS CONTROL DEVICES	3'-6" AFF
CLOCK OUTLETS	7'-0" AFF
DIMMERS	4'-0" AFF
DISCONNECT SWITCHES	5'-6" AFF
INDIVIDUAL CIRCUIT BREAKERS	5'-6" AFF
INTERCOM	3'-6" AFF
MOTOR STARTERS	5'-6" AFF
PANELBOARDS & CABINETS	6'-0" AFF TO TOP
PUSHBUTTONS	3'-6" AFF
RECEPTACLES	1'-6" AFF
RECEPTACLES ABOVE FINISHED COUNTER	8" AFC
VANITY LIGHT IN TOILET	6" ABOVE THE MIRROR, UON
VOLUME CONTROLS	3'-6" AFF
WALL SWITCHES	4'-0" AFF
TELECOMMUNICATIONS OUTLETS	1'-6" AFF
TELECOMMUNICATIONS OUTLETS - WALL PHONE	3'-6" AFF
TV OUTLETS	5'-0" AFF
NURSE CALL DOME LIGHTS	7'-6" AFF
NURSE CALL STATIONS	3'-6" AFF
FIRE ALARM - PULL STATIONS	3'-6" AFF
FIREMAN'S PHONE	3'-6" AFF
FIRE ALARM DEVICES HORN / SPEAKERS / STROBES (MOUNTING HEIGHT AT THE TOP OF THE FIRE ALARM DEVICE OR 6" BELOW CEILING WHICH IS LOWER)	7'-2" AFF TO TOP

MOUNTING HEIGHT NOTES:
1. ALL ELEVATIONS ARE TO CENTER LINE OF DEVICE, UNLESS OTHERWISE NOTED.
2. REFER TO EQUIPMENT ELEVATION DRAWINGS FOR COORDINATION WITH CASEWORK.
3. MOUNT MANUAL MOTOR STARTER ADJACENT TO OR ON UNIT.
4. REFER TO ARCHITECTURAL A0 SERIES FOR ADDITIONAL ELECTRICAL DEVICE MOUNTING HEIGHTS AND DEVICE ALIGNMENT RULES.

REFERENCE SYMBOLS

- SIM, 1, E0.1 — SECTION NUMBER; DRAWING NUMBER WHERE DRAWN
- DETAIL NUMBER; DRAWING NUMBER WHERE DRAWN
- EXXX — KEY NOTE

SINGLE SERVICE FLOOR DEVICE SYMBOLS

THE FOLLOWING SINGLE SERVICE DEVICE TYPES ARE SPECIFIED ON 'E' SERIES PLANS

TAG		SYMBOL
FB1	LEGRAND RFBA 2 GANG, OR EQUIVALENT (1) 5-20R RECEPTACLE	XX — SINGLE SERVICE FLOOR DEVICE
FB2	LEGRAND RFBA 2 GANG, OR EQUIVALENT (2) 5-20R RECEPTACLE	
FBF	LEGRAND RFBA 4 GANG, OR EQUIVALENT CONFIGURED FOR SYSTEMS FURNITURE FEED	
PT1	LEGRAND 6AT, OR EQUIVALENT (1) 5-20R RECEPTACLE	
PT2	LEGRAND 6AT, OR EQUIVALENT (2) 5-20R RECEPTACLE	
PTF	LEGRAND 6AT, OR EQUIVALENT CONFIGURED FOR SYSTEMS FURNITURE FEED	

ICT MULTISERVICE DEVICE SYMBOLS

THE FOLLOWING DEVICE TYPES ARE SPECIFIED ON ICT 'T' SERIES PLANS AND ARE ALSO REFLECTED ON 'E' SERIES ELECTRICAL PLANS TO SPECIFY LINE VOLTAGE POWER REQUIREMENTS. REFER TO 'T' SERIES PLANS FOR ELECTRICAL DEVICE REQUIREMENTS.

TAG		SYMBOL
DB4	DISPLAY BOX WITH TELECOM AND POWER	XX — FLOOR MOUNT MULTISERVICE DEVICE
DB5	DISPLAY BOX WITH TELECOM AND POWER	XX — WALL MOUNT MULTISERVICE DEVICE
DP	PATIENT ROOM DISPLAY BOX WITH TELECOM AND POWER	XX — CEILING MOUNT MULTISERVICE DEVICE
FB10	FLOOR BOX WITH AV TELECOM AND POWER	
FB34	FLOOR BOX WITH TELECOM AND POWER	
PT10	POKE-THRU WITH AV, TELECOM AND POWER	
PT11	POLE-THRU WITH TELECOM AND POWER	
PT33	FLOOR FURNITURE FEED WITH TELECOM AND POWER	
RK1	EQUIPMENT RACK PULL BOX WITH TELECOM AND POWER	
RK2	EQUIPMENT RACK PULL BOX WITH TELECOM AND POWER	

ELECTRICAL WIRING SYMBOLS

- A-1 — HOMERUN TO PANEL WITH CIRCUIT NUMBER(S) AS INDICATED
- CONDUIT RUN CONCEALED IN FINISHED AREAS, EXPOSED IN UNFINISHED AREAS OR BELOW ACCESS FLOORS
- CONDUIT CAST IN CONCRETE OR BELOW SLAB
- DEMOLITION WORK
- UG — UNDERGROUND CONDUIT/DUCTBANK
- FB — FEEDER BUSWAY
- PB — PLUG-IN BUSWAY
- G — GROUND CABLE, SIZE AS INDICATED
- GB — GROUND BUS
- CT — CABLE TRAY
- CONDUIT TURNED UP
- CONDUIT TURNED DOWN
- EMH — ELECTRIC MANHOLE
- EHH — ELECTRIC HANDHOLE
- TMH — TELEPHONE MANHOLE
- GROUND ROD

ELECTRICAL EQUIPMENT NAMING CONVENTION KEY

XXXXXXX — SES SOURCE; EQUIPMENT TYPE; LOCATION; BUILDING LEVEL; DISTRIBUTION BRANCH; VOLTAGE; LETTER ID

SOURCE

A	SES-A
B	SES-B
C	SES-C
D	SES-D
E	SES-E

EQUIPMENT TYPE

D	DISTRIBUTION BOARD / PANEL
P	BRANCH CIRCUIT PANEL BOARD
KP	KITCHEN POWER PANEL BOARD
A	AUTOMATIC TRANSFER SWITCH
T	TRANSFORMER
B	BUSWAY
S	SWITCHBOARD
G	GENERATOR

LOCATION

C	CENTRAL UTILITY PLANT
M	MAIN ELECTRICAL ROOM
E	SUB ELECTRICAL ROOM, EAST
W	SUB ELECTRICAL ROOM, WEST
T	COMMUNICATIONS ROOM
X	EMS BUILDING
F	FACILITIES
Y	CENTRAL PLANT YARD

BUILDING LEVEL

1	FIRST LEVEL
2	SECOND LEVEL
3	THIRD LEVEL
4	FOURTH LEVEL
R	ROOF LEVEL

DISTRIBUTION BRANCH

C	CRITICAL
E	EQUIPMENT
L	LIFE SAFETY
S	OPTIONAL STANDBY
U	UNINTERRUPTIBLE POWER SUPPLY

VOLTAGE

H	480/277V
L	208/120V

DEPARTMENT OF HEALTH & HUMAN SERVICES, USA — INDIAN HEALTH SERVICE · PHS · 1955

IHS Whiteriver Hospital
200 W Hospital Drive
Whiteriver, Arizona, 85941

IHS Project #: 131445
IHS Contract #: 75H70123R00008
IHS Award Date: 02/02/2024

BASED ON PROGRAM OF REQUIREMENTS DATED [**03/26/22**], POR AMENDMENT DATED [**02/03/25**], AND ON SCHEMATIC DRAWINGS APPROVED [**11/19/24**].

SMITHGROUP
455 NORTH THIRD STREET
SUITE 250
PHOENIX, AZ 85004
602.265.2200
smithgroup.com

ISSUED FOR	DATE
BID ADDENDUM-G	12JUN26
FINAL CONSTRUCTION DOCUMENTS	05MAR26

SEALS AND SIGNATURES

Registered Professional Engineer (Electrical) CERTIFICATE NO. 54673 DANIEL L. PETERSON Date Signed 06-12-26 ARIZONA, U.S.A.
EXPIRES: 6-30-28

ELECTRICAL ABBREVIATIONS AND SYMBOLS

Drawn By: Whittington Checked By: Baca

PROJECT NUMBER 14904.000

CD

SHEET NUMBER E0.1

Plot Date: 6/12/2026 1:12:16 PM Whittington

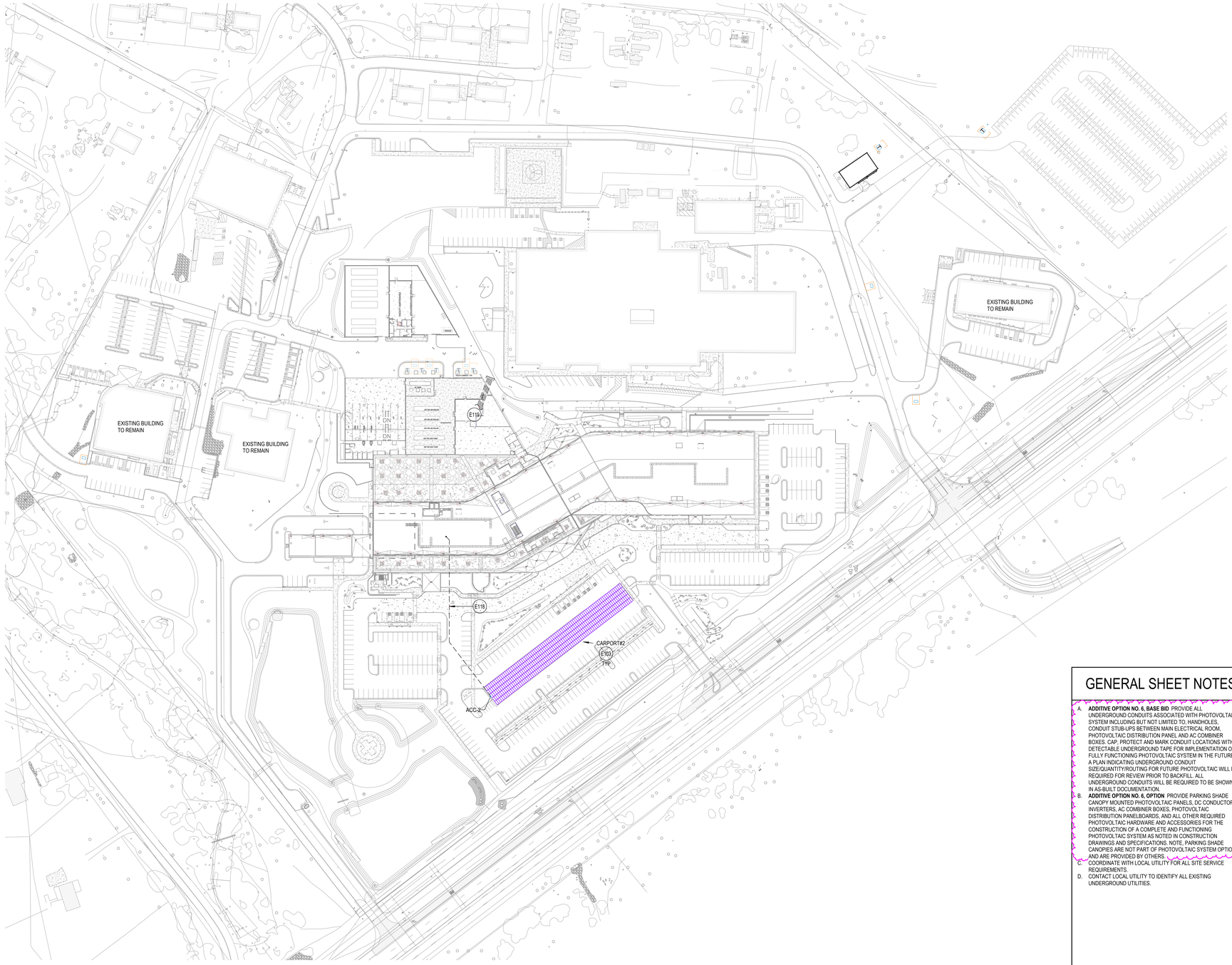

1 ELECTRICAL SITE PHOTOVOLTAIC SYSTEM PLAN PHASE 1
SCALE: 1" = 80'-0"

PROJECT NORTH

0 60' 120' 180'
GRAPHIC SCALE: 1" = 60' - 0"

GENERAL SHEET NOTES

A. **ADDITIVE OPTION NO. 6, BASE BID** PROVIDE ALL UNDERGROUND CONDUITS ASSOCIATED WITH PHOTOVOLTAIC SYSTEM INCLUDING BUT NOT LIMITED TO, HANDHOLES, CONDUIT STUB-UPS BETWEEN MAIN ELECTRICAL ROOM, PHOTOVOLTAIC DISTRIBUTION PANEL AND AC COMBINER BOXES. CAP, PROTECT AND MARK CONDUIT LOCATIONS WITH DETECTABLE UNDERGROUND TAPE FOR IMPLEMENTATION OF FULLY FUNCTIONING PHOTOVOLTAIC SYSTEM IN THE FUTURE. A PLAN INDICATING UNDERGROUND CONDUIT SIZE/QUANTITY/ROUTING FOR FUTURE PHOTOVOLTAIC WILL BE REQUIRED FOR REVIEW PRIOR TO BACKFILL. ALL UNDERGROUND CONDUITS WILL BE REQUIRED TO BE SHOWN IN AS-BUILT DOCUMENTATION.

B. **ADDITIVE OPTION NO. 6, OPTION** PROVIDE PARKING SHADE CANOPY MOUNTED PHOTOVOLTAIC PANELS, DC CONDUCTORS, INVERTERS, AC COMBINER BOXES, PHOTOVOLTAIC DISTRIBUTION PANELBOARDS, AND ALL OTHER REQUIRED PHOTOVOLTAIC HARDWARE AND ACCESSORIES FOR THE CONSTRUCTION OF A COMPLETE AND FUNCTIONING PHOTOVOLTAIC SYSTEM AS NOTED IN CONSTRUCTION DRAWINGS AND SPECIFICATIONS. NOTE, PARKING SHADE CANOPIES ARE NOT PART OF PHOTOVOLTAIC SYSTEM OPTION AND ARE PROVIDED BY OTHERS.

C. COORDINATE WITH LOCAL UTILITY FOR ALL SITE SERVICE REQUIREMENTS. 6

D. CONTACT LOCAL UTILITY TO IDENTIFY ALL EXISTING UNDERGROUND UTILITIES.

SHEET KEYNOTES

E103 590W Q CELL PANELS OR APPROVED SIMILAR ARE THE BASIS OF DESIGN FOR THE SOLAR ARRAY. ANY PROPOSED DEVIATION FROM THIS SPECIFICATION MUST BE COORDINATED WITH THE ENGINEER BEFORE IMPLEMENTATION.

E118 PROVIDE (4) 3" CONDUITS FROM ACC-2, ROUTED UNDERGROUND AND STUBBED UP INTO ELECTRICAL ELC-2056. CONDUITS SHALL THEN BE ROUTED VERTICALLY TO 2ND LEVEL CEILING SPACE AND EXTENDED OVERHEAD TO PV-DPB LOCATED IN MAIN NORMAL ELECTRICAL CUP-2374. PROVIDE PULL BOX(ES) AS REQUIRED. UNDERGROUND ELBOWS SHALL BE PVC COATED GRMC. EXPOSED EXTERIOR CONDUIT SHALL BE GRMC. PULL BOX LOCATIONS SHALL BE COORDINATED WITH EOR PRIOR TO COMMENCING WORK. REFER TO PV DIAGRAMS FOR ADDITIONAL INFORMATION.

E119 PROVIDE (2) 3" CONDUITS FROM PV-DPA, (4) 3" CONDUITS FROM PV-DPC, AND (4) 3" CONDUITS FROM PV-DPD, ROUTED UNDERGROUND AND STUBBED TO AREA SHOWN. PV DISTRIBUTION PANELS LOCATED IN MAIN NORMAL ELECTRICAL ROOM CUP-2374. REFER TO SHEET E6.2.1 FOR ADDITIONAL INFORMATION.

Plot Date: 6/12/2026 1:12:23 PM Whittington

INDIAN HEALTH SERVICE · IHS · 1955 ·
DEPARTMENT OF HEALTH & HUMAN SERVICES, USA

IHS Whiteriver Hospital

200 W Hospital Drive
Whiteriver, Arizona, 85941

IHS Project #: 131445
IHS Contract #: 75H70123R00008
IHS Award Date: 02/02/2024

BASED ON PROGRAM OF REQUIREMENTS DATED [**03/26/22**], POR AMENDMENT DATED [**02/03/25**], AND ON SCHEMATIC DRAWINGS APPROVED [**11/19/24**].

SMITHGROUP

455 NORTH THIRD STREET
SUITE 250
PHOENIX, AZ 85004
602.265.2200
smithgroup.com

ISSUED FOR	DATE
BID ADDENDUM-G	12JUN26
FINAL CONSTRUCTION DOCUMENTS	23JAN26

SEALS AND SIGNATURES

Registered Professional Engineer
CERTIFICATE NO.
54673
DANIEL L. PETERSON
Date Signed 06/12/26
ARIZONA U.S.A.
EXPIRES: 6-30-28

ELECTRICAL SITE PHOTOVOLTAIC SYSTEM PLAN PHASE 1

Drawn By: Whittington Checked By: Baca
14904.000
PROJECT NUMBER

CD **E1.2.P1**
SHEET NUMBER

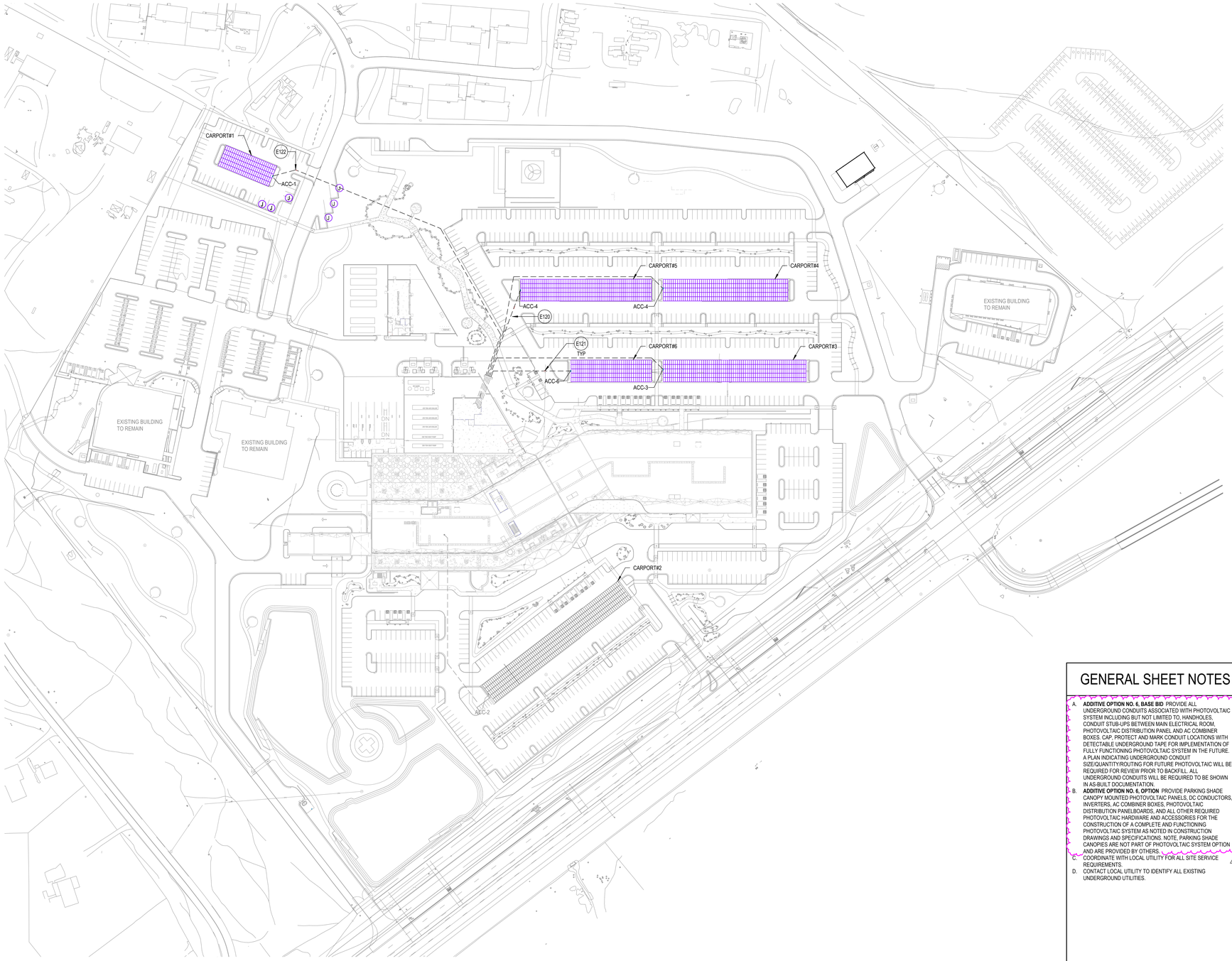

1 ELECTRICAL SITE PHOTOVOLTAIC SYSTEM PLAN PHASE 2
SCALE: 1" = 80'-0"

PROJECT NORTH

0 60' 120' 180'
GRAPHIC SCALE: 1" = 60' - 0"

GENERAL SHEET NOTES

A. **ADDITIVE OPTION NO. 6, BASE BID** PROVIDE ALL UNDERGROUND CONDUITS ASSOCIATED WITH PHOTOVOLTAIC SYSTEM INCLUDING BUT NOT LIMITED TO, HANDHOLES, CONDUIT STUB-UPS BETWEEN MAIN ELECTRICAL ROOM, PHOTOVOLTAIC DISTRIBUTION PANEL AND AC COMBINER BOXES. CAP, PROTECT AND MARK CONDUIT LOCATIONS WITH DETECTABLE UNDERGROUND TAPE FOR IMPLEMENTATION OF FULLY FUNCTIONING PHOTOVOLTAIC SYSTEM IN THE FUTURE. A PLAN INDICATING UNDERGROUND CONDUIT SIZE/QUANTITY/ROUTING FOR FUTURE PHOTOVOLTAIC WILL BE REQUIRED FOR REVIEW PRIOR TO BACKFILL. ALL UNDERGROUND CONDUITS WILL BE REQUIRED TO BE SHOWN IN AS-BUILT DOCUMENTATION.

B. **ADDITIVE OPTION NO. 6, OPTION** PROVIDE PARKING SHADE CANOPY MOUNTED PHOTOVOLTAIC PANELS, DC CONDUCTORS, INVERTERS, AC COMBINER BOXES, PHOTOVOLTAIC DISTRIBUTION PANELBOARDS, AND ALL OTHER REQUIRED PHOTOVOLTAIC HARDWARE AND ACCESSORIES FOR THE CONSTRUCTION OF A COMPLETE AND FUNCTIONING PHOTOVOLTAIC SYSTEM AS NOTED IN CONSTRUCTION DRAWINGS AND SPECIFICATIONS. NOTE, PARKING SHADE CANOPIES ARE NOT PART OF PHOTOVOLTAIC SYSTEM OPTION AND ARE PROVIDED BY OTHERS.

C. COORDINATE WITH LOCAL UTILITY FOR ALL SITE SERVICE REQUIREMENTS.

D. CONTACT LOCAL UTILITY TO IDENTIFY ALL EXISTING UNDERGROUND UTILITIES.

SHEET KEYNOTES

E120 EXTEND FROM STUBBED LOCATION, UNDERGROUND CONDUITS ORIGINATING FROM PV-DBD TO ACC. PROVIDE PULL BOX(ES) AS REQUIRED. UNDERGROUND ELBOWS SHALL BE PVC COATED GRMC. EXPOSED EXTERIOR CONDUIT SHALL BE GRMC. PULL BOX LOCATIONS SHALL BE COORDINATED WITH EOR PRIOR TO COMMENCING WORK. REFER TO PV DIAGRAMS FOR ADDITIONAL INFORMATION INCLUDING CONDUIT SIZES.

E121 EXTEND FROM STUBBED LOCATION, UNDERGROUND CONDUITS ORIGINATING FROM PV-DBC TO ACC. PROVIDE PULL BOX(ES) AS REQUIRED. UNDERGROUND ELBOWS SHALL BE PVC COATED GRMC. EXPOSED EXTERIOR CONDUIT SHALL BE GRMC. PULL BOX LOCATIONS SHALL BE COORDINATED WITH EOR PRIOR TO COMMENCING WORK. REFER TO PV DIAGRAMS FOR ADDITIONAL INFORMATION INCLUDING CONDUIT SIZES.

E122 EXTEND FROM STUBBED LOCATION, UNDERGROUND CONDUITS ORIGINATING FROM PV-DBA TO ACC. PROVIDE PULL BOX(ES) AS REQUIRED. UNDERGROUND ELBOWS SHALL BE PVC COATED GRMC. EXPOSED EXTERIOR CONDUIT SHALL BE GRMC. PULL BOX LOCATIONS SHALL BE COORDINATED WITH EOR PRIOR TO COMMENCING WORK. REFER TO PV DIAGRAMS FOR ADDITIONAL INFORMATION INCLUDING CONDUIT SIZES.

Plot Date: 6/12/2026 1:12:35 PM Whittington

IHS Whiteriver Hospital

200 W Hospital Drive
Whiteriver, Arizona, 85941

IHS Project #: 131445
IHS Contract #: 75H70123R00008
IHS Award Date: 02/02/2024

BASED ON PROGRAM OF REQUIREMENTS DATED [**03/26/22**], POR AMENDMENT DATED [**02/03/25**], AND ON SCHEMATIC DRAWINGS APPROVED [**11/19/24**].

SMITHGROUP

455 NORTH THIRD STREET
SUITE 250
PHOENIX, AZ 85004
602.265.2200
smithgroup.com

ISSUED FOR	DATE
BID ADDENDUM-G	12JUN26
FINAL CONSTRUCTION DOCUMENTS	23JAN26

SEALS AND SIGNATURES

Registered Professional Engineer (Electrical) CERTIFICATE NO. 54673 DANIEL L. PETERSON Date Signed 06-12-26 ARIZONA U.S.A.

EXPIRES: 6-30-28

ELECTRICAL SITE PHOTOVOLTAIC SYSTEM PLAN PHASE 2

Drawn By: Whittington Checked By: Baca

14904.000
PROJECT NUMBER

CD **E1.2.P2**
SHEET NUMBER

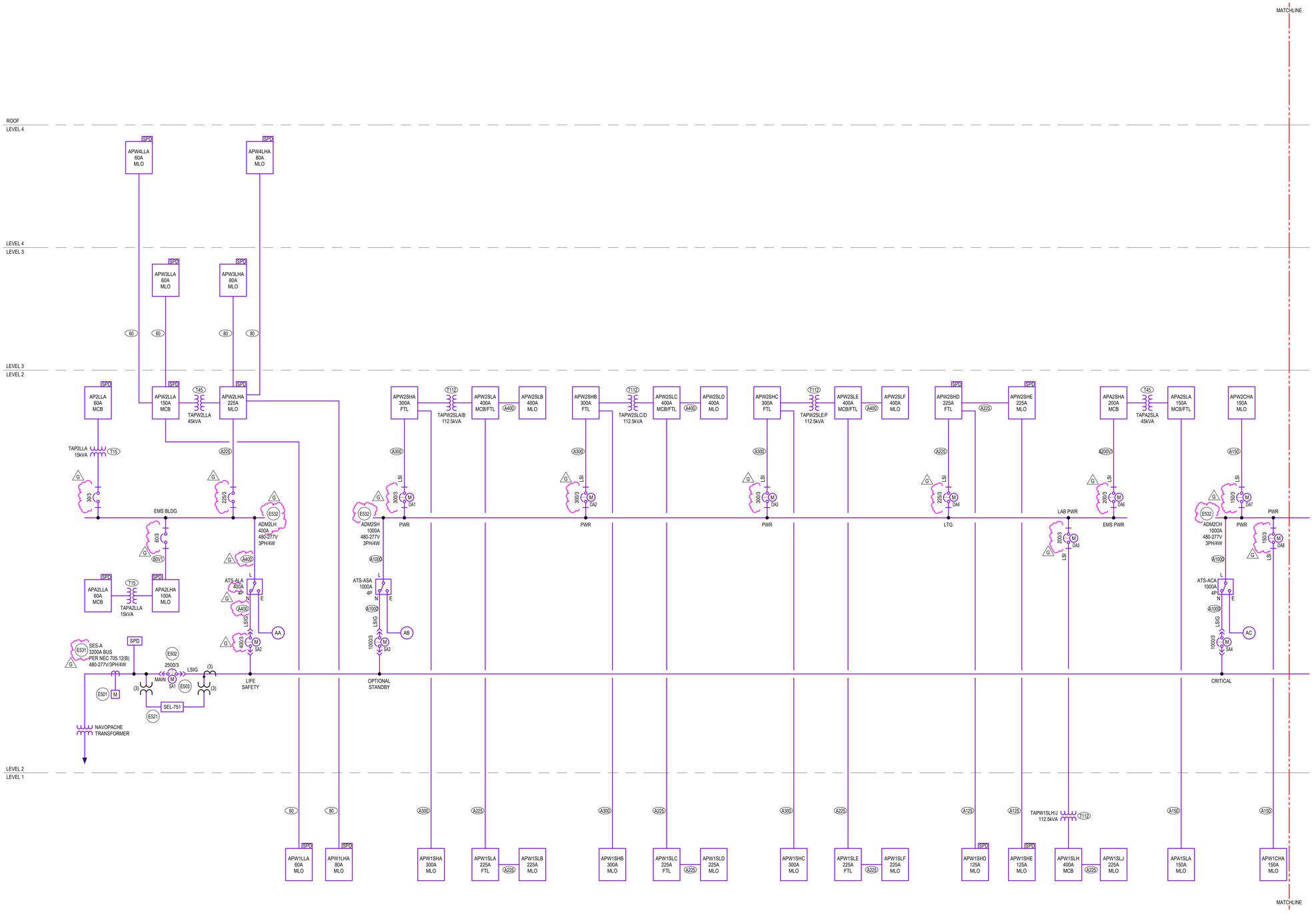

1 ONE LINE DIAGRAM - SES-A, 1 OF 2
SCALE: NOT TO SCALE

GENERAL SHEET NOTES

A. **ADDITIVE OPTION NO. 6, BASE BID**. PROVIDE ALL UNDERGROUND CONDUITS ASSOCIATED WITH PHOTOVOLTAIC SYSTEM INCLUDING BUT NOT LIMITED TO, HANDHOLES, CONDUIT STUB-UPS BETWEEN MAIN ELECTRICAL ROOM, PHOTOVOLTAIC DISTRIBUTION PANEL AND AC COMBINER BOXES. CAP, PROTECT AND MARK CONDUIT LOCATIONS WITH DETECTABLE UNDERGROUND TAPE FOR IMPLEMENTATION OF FULLY FUNCTIONING PHOTOVOLTAIC SYSTEM IN THE FUTURE. A PLAN INDICATING UNDERGROUND CONDUIT SIZE/QUANTITY/ROUTING FOR FUTURE PHOTOVOLTAIC WILL BE REQUIRED FOR REVIEW PRIOR TO BACKFILL. ALL UNDERGROUND CONDUITS WILL BE REQUIRED TO BE SHOWN IN AS-BUILT DOCUMENTATION.

B. **ADDITIVE OPTION NO. 6, OPTION**. PROVIDE PARKING SHADE CANOPY MOUNTED PHOTOVOLTAIC PANELS, DC CONDUCTORS, INVERTERS, AC COMBINER BOXES, PHOTOVOLTAIC DISTRIBUTION PANELBOARDS, AND ALL OTHER REQUIRED PHOTOVOLTAIC HARDWARE AND ACCESSORIES FOR THE CONSTRUCTION OF A COMPLETE AND FUNCTIONING PHOTOVOLTAIC SYSTEM AS NOTED IN CONSTRUCTION DRAWINGS AND SPECIFICATIONS. NOTE, PARKING SHADE CANOPIES ARE NOT PART OF PHOTOVOLTAIC SYSTEM OPTION AND ARE PROVIDED BY OTHERS.

C. SEE DRAWING E0.1 FOR ABBREVIATIONS, SYMBOLS, GENERAL NOTES. /G

D. THE CONTRACTOR SHALL COORDINATE EXACT LOCATION OF EQUIPMENT POWER CONNECTIONS WITH EQUIPMENT INSTALLER PRIOR TO ROUGH-IN.

E. COORDINATE FINAL LOCATION OF MECHANICAL EQUIPMENT AND ASSOCIATED DISCONNECT SWITCHES, STARTERS, VFDS, CONTROL POWER AND OTHER POWER REQUIREMENTS WITH DIV 23 AND MECHANICAL DRAWINGS.

F. SEE MECHANICAL EQUIPMENT SCHEDULE FOR ASSOCIATED OVERCURRENT DEVICES, DISCONNECT SWITCHES, STARTERS AND WIRES.

G. VOLTAGE DROP SHALL BE LIMITED TO LESS THAN 3% FOR ALL BRANCH CIRCUITS AND 2% FOR ALL FEEDERS.

H. CONTRACTOR SHALL COORDINATE AND FIELD VERIFY REQUIREMENT OF NEUTRAL CONDUCTOR FOR ALL EQUIPMENT AND PROVIDE NEUTRAL CONDUCTOR AS NECESSARY.

I. ALL LIFE SAFETY AND LIGHTING PANELBOARDS SHALL BE EQUIPPED WITH TYPE 2 SPD.

J. ALL AUTOMATIC TRANSFER SWITCHES SHALL BE 4 POLE AND EQUIPPED WITH BYPASS ISOLATION.

K. ALL UTILITY TRANSFORMERS DESCRIBED AS NAVOPACHE TRANSFORMER TO BE COORDINATED WITH UTILITY AND PROVIDED BY UTILITY. COORDINATE ALL FINAL REQUIREMENTS AND AVAILABLE FAULT CURRENT CONTRIBUTIONS BASED ON SUPPLIED EQUIPMENT. BASIS OF DESIGN 2500KVA, AND 5%Z.

L. BASIS OF DESIGN ELECTRICAL EQUIPMENT MANUFACTURERS ARE SIEMENS, ASCO, AND CATERPILLAR. EQUIVALENT EQUIPMENT FROM APPROVED MANUFACTURERS IS ACCEPTABLE, PER DIV 26 SPECIFICATIONS. /G

SHEET KEYNOTES

E501 NAVOPACHE UTILITY METER. METER SHALL BE EQUIPPED WITH CAPABILITY TO INTERFACE WITH BMS. ELECTRICAL CONTRACTOR SHALL PROVIDE REQUIRED CONDUIT AND COMMUNICATION WIRING FROM METER TO POINT OF INTERFACE WITH BMS.

E502 COMPLIANCE WITH "NEC 240.87 ARC ENERGY REDUCTION" REQUIRED. REDUCTION METHOD SHALL ALLOW FOR REQUIRED SELECTIVE DEVICE COORDINATION AND ARC FLASH REQUIREMENTS. REFER TO ELECTRICAL SPECIFICATIONS FOR ADDITIONAL INFORMATION.

E503 PROVIDE PERMANENT IDENTIFICATION PLAQUE INDICATING THE FOLLOWING: ELECTRICAL SERVICE #1 OF 5 GENERATORS LOCATED IN ELECTRICAL EQUIPMENT YARD, GENERATOR DISCONNECTS LOCATED IN ADJACENT ELECTRICAL ROOM IN GMDB. PV DISCONNECT LOCATED AT END OF THIS ELECTRICAL EQUIPMENT LINEUP.

E521 PROVIDE RELAY PROTECTION ELEMENTS REQUIRED BY UTILITY AND MULTIPLE GENERATOR AND PV MONITORING AND CONTROL SYSTEM MANUFACTURER. INTEGRATE SEL RELAY AND PROGRAMMING INTO MULTIPLE GENERATOR AND PV MONITORING SYSTEM AND CIRCUIT BREAKER. PROVIDE AND PROGRAM PROTECTION ELEMENT SET POINTS AND LOGIC WITHIN THE RELAY. REFER TO SEL-751 DETAIL FOR ADDITIONAL INFORMATION.

E531 ELECTRICAL EQUIPMENT CONSTRUCTION = UL891 REAR CONNECTED SWITCHBOARD DRAW-OUT LOW VOLTAGE POWER CIRCUIT BREAKERS

E532 ELECTRICAL EQUIPMENT CONSTRUCTION = UL67 PANELBOARD IP20, TOUCH-SAFE, PLUG-IN MOLDED CASE CIRCUIT BREAKERS, ELECTRONIC TRIP UNIT /G

FEEDER SCHEDULE

(X) "X" DENOTES ALUMINUM CONDUCTORS, ALL OTHER CONDUCTORS SHALL BE COPPER

60	4#4 + 1#10 G, 1 1/4" C
60V1	4#1 + 1#6 G, 1 1/2" C
80	4#3 + 1#8 G, 1 1/4" C
A125	4#2/0 + 1#6 G, 2" C
A150	4#3/0 + 1#4 G, 2" C
A200V1	4#400KCMIL + 1#1 G, 2 1/2" C
A225	4#300KCMIL + 1#2 G, 2 1/2" C
A300	4#500KCMIL + 1#2 G, 3" C
A400	2 SETS OF 4#250KCMIL + 1#1 G, (2) 2 1/2" C
A1000	3 SETS OF 4#600KCMIL + 1#4/0 G, (3) 3 1/2" C
T15	15KVA TRANSFORMER, 480-208Y/120V, 3PH PRIMARY FEEDER: 3#10 + 1#10 G, 3/4" C SECONDARY FEEDER: 4#4 + 1#8 G, 1 1/4" C BONDING JUMPERS & GROUNDING ELECTRODE CONDUCTOR: #8
T45	45KVA TRANSFORMER, 480-208Y/120V, 3PH PRIMARY FEEDER: 3#3 + 1#8 G, 1 1/4" C SECONDARY FEEDER: 4#1/0 + 1#6 G, 2" C BONDING JUMPERS & GROUNDING ELECTRODE CONDUCTOR: #6
T112	112.5KVA TRANSFORMER, 480-208Y/120V, 3PH PRIMARY FEEDER: 3#3/0 + 1#6 G, 2" C SECONDARY FEEDER: 2 SETS OF 4#3/0 + 1#2 G, (2) 2" C BONDING JUMPERS & GROUNDING ELECTRODE CONDUCTOR: #2

INDIAN HEALTH SERVICE · IHS · 1955 · DEPARTMENT OF HEALTH & HUMAN SERVICES, USA

IHS Whiteriver Hospital

200 W Hospital Drive
Whiteriver, Arizona, 85941

IHS Project #: 131445
IHS Contract #: 75H70123R00008
IHS Award Date: 02/02/2024

BASED ON PROGRAM OF REQUIREMENTS DATED [**03/26/22**], POR AMENDMENT DATED [**02/03/25**], AND ON SCHEMATIC DRAWINGS APPROVED [**11/19/24**].

SMITHGROUP

455 NORTH THIRD STREET
SUITE 250
PHOENIX, AZ 85004
602.265.2200
smithgroup.com

ISSUED FOR	DATE
BID ADDENDUM-G	12JUN26
BID ADDENDUM-E	28MAY26
BID ADDENDUM-A	16APR26
FINAL CONSTRUCTION DOCUMENTS	05MAR26

SEALS AND SIGNATURES

Registered Professional Engineer (Electrical) CERTIFICATE NO. 54673 DANIEL L. PETERSON State Board of Technical Registration 12-28-1982 ARIZONA, U.S.A.
EXPIRES: 6-30-28

ELECTRICAL ONE LINE DIAGRAM - SES-A, 1 OF 2

Drawn By: Whittington Checked By: Baca

PROJECT NUMBER 14904.000

CD **E5.1.1**
SHEET NUMBER

Plot Date: 6/12/2026 1:12:40 PM Whittington

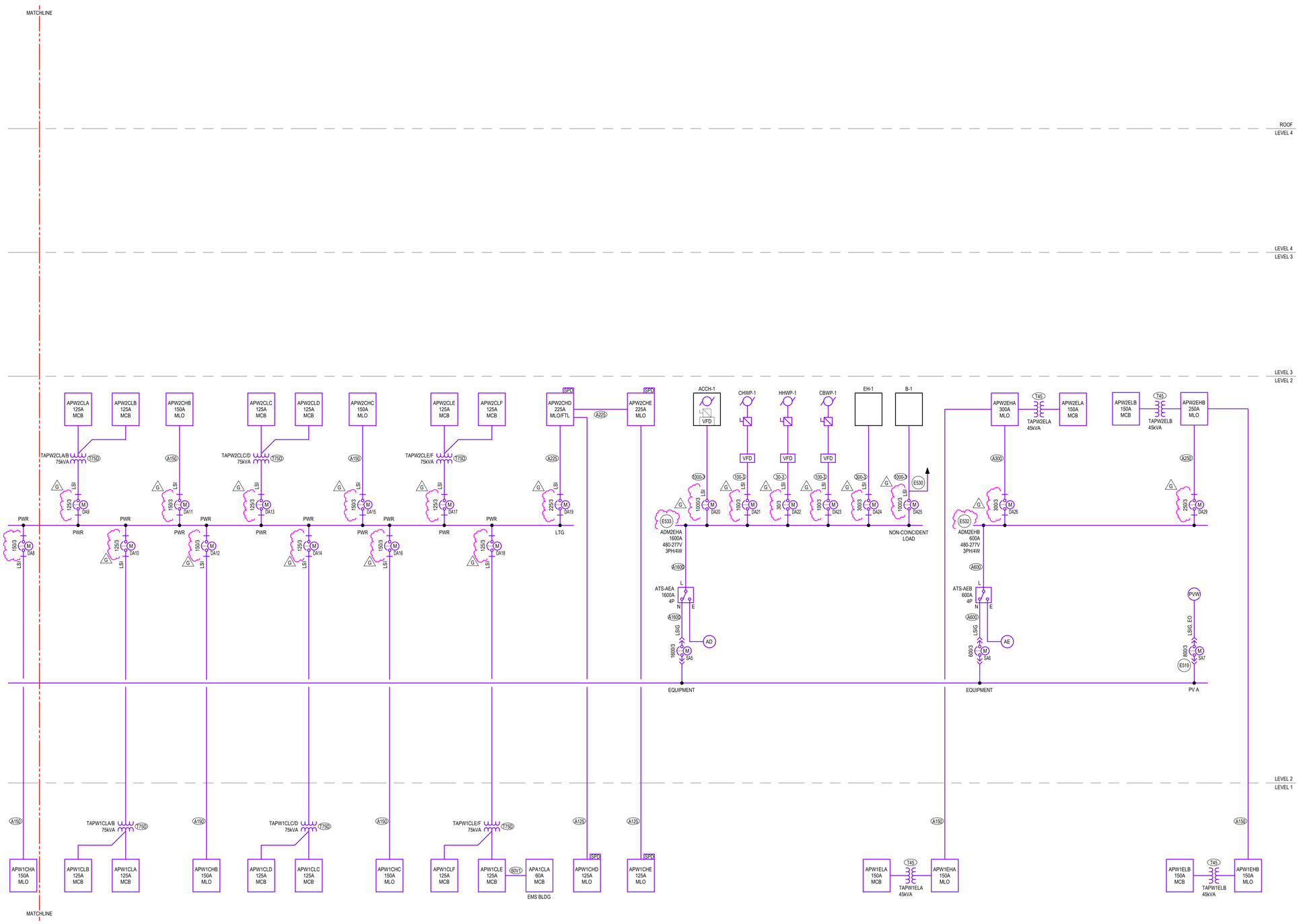

1 ONE LINE DIAGRAM - SES-A, 2 OF 2
SCALE: NOT TO SCALE

GENERAL SHEET NOTES

A. **ADDITIVE OPTION NO. 6, BASE BID** PROVIDE ALL UNDERGROUND CONDUITS ASSOCIATED WITH PHOTOVOLTAIC SYSTEM INCLUDING BUT NOT LIMITED TO, HANDHOLES, CONDUIT STUB-UPS BETWEEN MAIN ELECTRICAL ROOM, PHOTOVOLTAIC DISTRIBUTION PANEL AND AC COMBINER BOXES. CAP, PROTECT AND MARK CONDUIT LOCATIONS WITH DETECTABLE UNDERGROUND TAPE FOR IMPLEMENTATION OF FULLY FUNCTIONING PHOTOVOLTAIC SYSTEM IN THE FUTURE. A PLAN INDICATING UNDERGROUND CONDUIT SIZE/QUANTITY/ROUTING FOR FUTURE PHOTOVOLTAIC WILL BE REQUIRED FOR REVIEW PRIOR TO BACKFILL. ALL UNDERGROUND CONDUITS WILL BE REQUIRED TO BE SHOWN IN AS-BUILT DOCUMENTATION.

B. **ADDITIVE OPTION NO. 6, OPTION** PROVIDE PARKING SHADE CANOPY MOUNTED PHOTOVOLTAIC PANELS, DC CONDUCTORS, INVERTERS, AC COMBINER BOXES, PHOTOVOLTAIC DISTRIBUTION PANELBOARDS, AND ALL OTHER REQUIRED PHOTOVOLTAIC HARDWARE AND ACCESSORIES FOR THE CONSTRUCTION OF A COMPLETE AND FUNCTIONING PHOTOVOLTAIC SYSTEM AS NOTED IN CONSTRUCTION DRAWINGS AND SPECIFICATIONS. NOTE, PARKING SHADE CANOPIES ARE NOT PART OF PHOTOVOLTAIC SYSTEM OPTION AND ARE PROVIDED BY OTHERS.

C. SEE DRAWING E0.1 FOR ABBREVIATIONS, SYMBOLS, GENERAL NOTES. (G)

D. THE CONTRACTOR SHALL COORDINATE EXACT LOCATION OF EQUIPMENT POWER CONNECTIONS WITH EQUIPMENT INSTALLER PRIOR TO ROUGH-IN.

E. COORDINATE FINAL LOCATION OF MECHANICAL EQUIPMENT AND ASSOCIATED DISCONNECT SWITCHES, STARTERS, VFDS, CONTROL POWER AND OTHER POWER REQUIREMENTS WITH DIV 23 AND MECHANICAL DRAWINGS.

F. SEE MECHANICAL EQUIPMENT SCHEDULE FOR ASSOCIATED OVERCURRENT DEVICES, DISCONNECT SWITCHES, STARTERS AND WIRES.

G. VOLTAGE DROP SHALL BE LIMITED TO LESS THAN 3% FOR ALL BRANCH CIRCUITS AND 2% FOR ALL FEEDERS.

H. CONTRACTOR SHALL COORDINATE AND FIELD VERIFY REQUIREMENT OF NEUTRAL CONDUCTOR FOR ALL EQUIPMENT AND PROVIDE NEUTRAL CONDUCTOR AS NECESSARY.

I. ALL LIFE SAFETY AND LIGHTING PANELBOARDS SHALL BE EQUIPPED WITH TYPE 2 SPD.

J. ALL AUTOMATIC TRANSFER SWITCHES SHALL BE 4 POLE AND EQUIPPED WITH BYPASS ISOLATION.

K. ALL UTILITY TRANSFORMERS DESCRIBED AS NAVOPACHE TRANSFORMER TO BE COORDINATED WITH UTILITY AND PROVIDED BY UTILITY. COORDINATE ALL FINAL REQUIREMENTS AND AVAILABLE FAULT CURRENT CONTRIBUTIONS BASED ON SUPPLIED EQUIPMENT. BASIS OF DESIGN 2500KVA, AND 5%Z.

L. BASIS OF DESIGN ELECTRICAL EQUIPMENT MANUFACTURERS ARE SIEMENS, ASCO, AND CATERPILLAR. EQUIVALENT EQUIPMENT FROM APPROVED MANUFACTURERS IS ACCEPTABLE, PER DIV 26 SPECIFICATIONS. (G)

SHEET KEYNOTES

E519 PV CIRCUIT BREAKER SHALL BE LOCATED AT LAST BUSSED SPACE. PROVIDE PERMANENT IDENTIFICATION PLAQUE INDICATING THE FOLLOWING: PV POWER SOURCE - DO NOT RELOCATE THIS CIRCUIT BREAKER

E530 PROVIDE SHUNT TRIP CIRCUIT BREAKER FOR INTERFACE WITH BOILER EMERGENCY SHUTDOWN EPO SWITCHES. REFER TO EMP2.2.G FOR ADDITIONAL INFORMATION.

E532 ELECTRICAL EQUIPMENT CONSTRUCTION = UL67 PANELBOARD IP20, TOUCH-SAFE, PLUG-IN MOLDED CASE CIRCUIT BREAKERS, ELECTRONIC TRIP UNIT

E533 ELECTRICAL EQUIPMENT CONSTRUCTION = UL891 SWITCHBOARD <= 600A IP20, TOUCH-SAFE, PLUG-IN MOLDED CASE CIRCUIT BREAKERS, ELECTRONIC TRIP UNIT > 600A FIXED MOUNT MOLDED CASE CIRCUIT BREAKERS, ELECTRONIC TRIP UNIT (G)

FEEDER SCHEDULE

(X) "X" DENOTES ALUMINUM CONDUCTORS, ALL OTHER CONDUCTORS SHALL BE COPPER

30-3	3#10 + 1#10 G, 3/4" C
60V1	4#1 + 1#6 G, 1 1/2" C
100-3	3#1 + 1#8 G, 1 1/2" C
300-3	3#350KCMIL + 1#4 G, 3" C
1000-3	3 SETS OF 3#400KCMIL + 1#2/0 G, (3) 3" C
A125	4#2/0 + 1#6 G, 2" C
A150	4#3/0 + 1#4 G, 2" C
A225	4#300KCMIL + 1#2 G, 2 1/2" C
A250	4#350KCMIL + 1#2 G, 2 1/2" C
A300	4#500KCMIL + 1#2 G, 3" C
A600	2 SETS OF 4#500KCMIL + 1#2/0 G, (2) 3" C
A1600	5 SETS OF 4#600KCMIL + 1#350KCMIL G, (5) 3 1/2" C
T45	45KVA TRANSFORMER, 480-208Y/120V, 3PH PRIMARY FEEDER: 3#3 + 1#8 G, 1 1/4" C SECONDARY FEEDER: 4#1/0 + 1#6 G, 2" C BONDING JUMPERS & GROUNDING ELECTRODE CONDUCTOR: #6
T75D	75KVA TRANSFORMER, 480-208Y/120V, 3PH PRIMARY FEEDER: 3#1/0 + 1#6 G, 1 1/2" C SECONDARY FEEDERS: 4#1/0 + 1#2 G, 2" C TO EACH PANEL BONDING JUMPERS & GROUNDING ELECTRODE CONDUCTOR: #2

INDIAN HEALTH SERVICE · IHS · 1955 · DEPARTMENT OF HEALTH & HUMAN SERVICES, USA

IHS Whiteriver Hospital

200 W Hospital Drive
Whiteriver, Arizona, 85941

IHS Project #: 131445
IHS Contract #: 75H70123R00008
IHS Award Date: 02/02/2024

BASED ON PROGRAM OF REQUIREMENTS DATED [**03/26/22**], POR AMENDMENT DATED [**02/03/25**], AND ON SCHEMATIC DRAWINGS APPROVED [**11/19/24**].

SMITHGROUP

455 NORTH THIRD STREET
SUITE 250
PHOENIX, AZ 85004
602.265.2200
smithgroup.com

ISSUED FOR	DATE
BID ADDENDUM-G	12JUN26
BID ADDENDUM-E	28MAY26
BID ADDENDUM-A	16APR26
FINAL CONSTRUCTION DOCUMENTS	05MAR26

SEALS AND SIGNATURES

Registered Professional Engineer Certificate No. 54673 DANIEL L. PETERSON Date Signed 06-12-26 Arizona U.S.A.

EXPIRES: 6-30-28

ELECTRICAL ONE LINE DIAGRAM - SES-A, 2 OF 2

Drawn By: Whittington Checked By: Baca

14904.000
PROJECT NUMBER

CD **E5.1.2**
SHEET NUMBER

Plot Date: 6/12/2026 1:12:45 PM Whittington

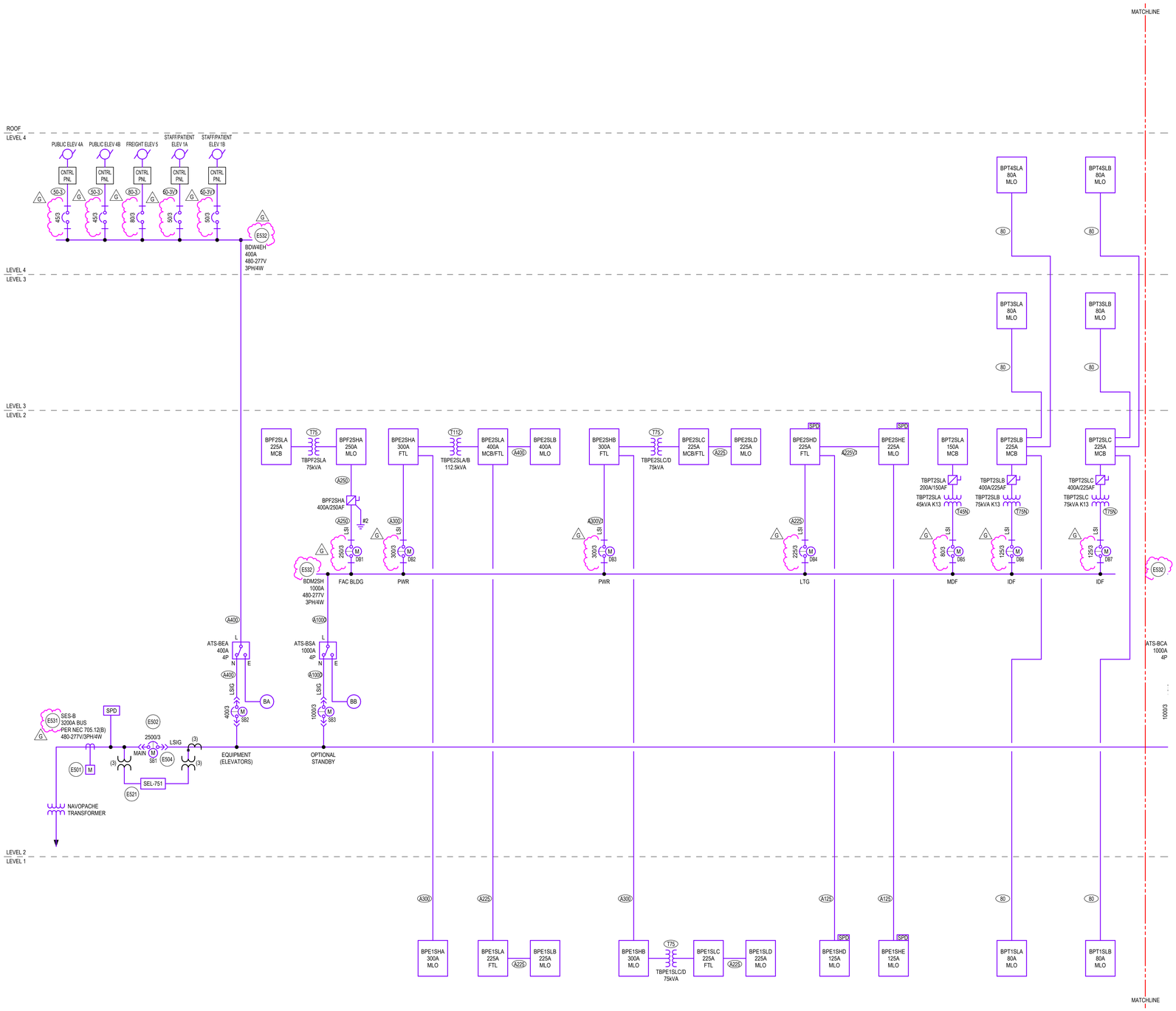

1 ONE LINE DIAGRAM - SES-B, 1 OF 2
SCALE: NOT TO SCALE

GENERAL SHEET NOTES

A. **ADDITIVE OPTION NO. 6, BASE BID** PROVIDE ALL UNDERGROUND CONDUITS ASSOCIATED WITH PHOTOVOLTAIC SYSTEM INCLUDING BUT NOT LIMITED TO, HANDHOLES, CONDUIT STUB-UPS BETWEEN MAIN ELECTRICAL ROOM, PHOTOVOLTAIC DISTRIBUTION PANEL AND AC COMBINER BOXES. CAP, PROTECT AND MARK CONDUIT LOCATIONS WITH DETECTABLE UNDERGROUND TAPE FOR IMPLEMENTATION OF FULLY FUNCTIONING PHOTOVOLTAIC SYSTEM IN THE FUTURE. A PLAN INDICATING UNDERGROUND CONDUIT SIZE/QUANTITY/ROUTING FOR FUTURE PHOTOVOLTAIC WILL BE REQUIRED FOR REVIEW PRIOR TO BACKFILL. ALL UNDERGROUND CONDUITS WILL BE REQUIRED TO BE SHOWN IN AS-BUILT DOCUMENTATION.

B. **ADDITIVE OPTION NO. 6, OPTION** PROVIDE PARKING SHADE CANOPY MOUNTED PHOTOVOLTAIC PANELS, DC CONDUCTORS, INVERTERS, AC COMBINER BOXES, PHOTOVOLTAIC DISTRIBUTION PANELBOARDS, AND ALL OTHER REQUIRED PHOTOVOLTAIC HARDWARE AND ACCESSORIES FOR THE CONSTRUCTION OF A COMPLETE AND FUNCTIONING PHOTOVOLTAIC SYSTEM AS NOTED IN CONSTRUCTION DRAWINGS AND SPECIFICATIONS. NOTE, PARKING SHADE CANOPIES ARE NOT PART OF PHOTOVOLTAIC SYSTEM OPTION AND ARE PROVIDED BY OTHERS.

C. SEE DRAWING E0.1 FOR ABBREVIATIONS, SYMBOLS, GENERAL NOTES. (G)

D. THE CONTRACTOR SHALL COORDINATE EXACT LOCATION OF EQUIPMENT POWER CONNECTIONS WITH EQUIPMENT INSTALLER PRIOR TO ROUGH-IN.

E. COORDINATE FINAL LOCATION OF MECHANICAL EQUIPMENT AND ASSOCIATED DISCONNECT SWITCHES, STARTERS, VFDS, CONTROL POWER AND OTHER POWER REQUIREMENTS WITH DIV 23 AND MECHANICAL DRAWINGS.

F. SEE MECHANICAL EQUIPMENT SCHEDULE FOR ASSOCIATED OVERCURRENT DEVICES, DISCONNECT SWITCHES, STARTERS AND WIRES.

G. VOLTAGE DROP SHALL BE LIMITED TO LESS THAN 3% FOR ALL BRANCH CIRCUITS AND 2% FOR ALL FEEDERS.

H. CONTRACTOR SHALL COORDINATE AND FIELD VERIFY REQUIREMENT OF NEUTRAL CONDUCTOR FOR ALL EQUIPMENT AND PROVIDE NEUTRAL CONDUCTOR AS NECESSARY.

I. ALL LIFE SAFETY AND LIGHTING PANELBOARDS SHALL BE EQUIPPED WITH TYPE 2 SPD.

J. ALL AUTOMATIC TRANSFER SWITCHES SHALL BE 4 POLE AND EQUIPPED WITH BYPASS ISOLATION.

K. ALL UTILITY TRANSFORMERS DESCRIBED AS NAVOPACHE TRANSFORMER TO BE COORDINATED WITH UTILITY AND PROVIDED BY UTILITY. COORDINATE ALL FINAL REQUIREMENTS AND AVAILABLE FAULT CURRENT CONTRIBUTIONS BASED ON SUPPLIED EQUIPMENT. BASIS OF DESIGN 2500KVA, AND 5%Z.

L. BASIS OF DESIGN ELECTRICAL EQUIPMENT MANUFACTURERS ARE SIEMENS, ASCO, AND CATERPILLAR. EQUIVALENT EQUIPMENT FROM APPROVED MANUFACTURERS IS ACCEPTABLE, PER DIV 26 SPECIFICATIONS. (G)

SHEET KEYNOTES

E501 NAVOPACHE UTILITY METER. METER SHALL BE EQUIPPED WITH CAPABILITY TO INTERFACE WITH BMS. ELECTRICAL CONTRACTOR SHALL PROVIDE REQUIRED CONDUIT AND COMMUNICATION WIRING FROM METER TO POINT OF INTERFACE WITH BMS.

E502 COMPLIANCE WITH "NEC 240.87 ARC ENERGY REDUCTION" REQUIRED. REDUCTION METHOD SHALL ALLOW FOR REQUIRED SELECTIVE DEVICE COORDINATION AND ARC FLASH REQUIREMENTS. REFER TO ELECTRICAL SPECIFICATIONS FOR ADDITIONAL INFORMATION.

E504 PROVIDE PERMANENT IDENTIFICATION PLAQUE INDICATING THE FOLLOWING: ELECTRICAL SERVICE #2 OF 5. GENERATORS LOCATED IN ELECTRICAL EQUIPMENT YARD, GENERATOR DISCONNECTS LOCATED IN ADJACENT ELECTRICAL ROOM IN GMDB. PV DISCONNECT LOCATED AT END OF THIS ELECTRICAL EQUIPMENT LINEUP.

E521 PROVIDE RELAY PROTECTION ELEMENTS REQUIRED BY UTILITY AND MULTIPLE GENERATOR AND PV MONITORING AND CONTROL SYSTEM MANUFACTURER. INTEGRATE SEL RELAY AND PROGRAMMING INTO MULTIPLE GENERATOR AND PV MONITORING SYSTEM AND CIRCUIT BREAKER. PROVIDE AND PROGRAM PROTECTION ELEMENT SET POINTS AND LOGIC WITHIN THE RELAY. REFER TO SEL-751 DETAIL FOR ADDITIONAL INFORMATION.

E531 ELECTRICAL EQUIPMENT CONSTRUCTION = UL891 REAR CONNECTED SWITCHBOARD DRAW-OUT LOW VOLTAGE POWER CIRCUIT BREAKERS

E532 ELECTRICAL EQUIPMENT CONSTRUCTION = UL67 PANELBOARD IP20, TOUCH-SAFE, PLUG-IN MOLDED CASE CIRCUIT BREAKERS, ELECTRONIC TRIP UNIT (G)

FEEDER SCHEDULE

(X) "A" DENOTES ALUMINUM CONDUCTORS, ALL OTHER CONDUCTORS SHALL BE COPPER

50-3	3#6 + 1#10 G, 3/4" C
50-3V1	3#2 + 1#4 G, 1 1/4" C
80	4#3 + 1#8 G, 1 1/4" C
80-3	3#3 + 1#8 G, 1 1/4" C
A125	4#2/0 + 1#6 G, 2" C
A225	4#300KCMIL + 1#2 G, 2 1/2" C
A225V1	4#400KCMIL + 1#1/0 G, 2 1/2" C
A250	4#350KCMIL + 1#2 G, 2 1/2" C
A300	4#500KCMIL + 1#2 G, 3" C
A300V1	4#600KCMIL + 1#1 G, 3" C
A400	2 SETS OF 4#250KCMIL + 1#1 G, (2) 2 1/2" C
A1000	3 SETS OF 4#600KCMIL + 1#4/0 G, (3) 3 1/2" C
T45N	45KVA TRANSFORMER, 480-208Y/120V, 3PH PRIMARY FEEDER: 3#3 + 1#8 G, 1 1/4" C SECONDARY FEEDER: 3#1/0, 1#4/0 N + 1#6 G, 2" C BONDING JUMPERS & GROUNDING ELECTRODE CONDUCTOR: #6
T75	75KVA TRANSFORMER, 480-208Y/120V, 3PH PRIMARY FEEDER: 3#1/0 + 1#6 G, 1 1/2" C SECONDARY FEEDER: 4#4/0 + 1#2 G, 2 1/2" C BONDING JUMPERS & GROUNDING ELECTRODE CONDUCTOR: #2
T75N	75KVA TRANSFORMER, 480-208Y/120V, 3PH PRIMARY FEEDER: 3#1/0 + 1#6 G, 1 1/2" C SECONDARY FEEDER: 3#4/0, 1#500KCMIL N + 1#2 G, 2 1/2" C BONDING JUMPERS & GROUNDING ELECTRODE CONDUCTOR: #2
T112	112.5KVA TRANSFORMER, 480-208Y/120V, 3PH PRIMARY FEEDER: 3#3/0 + 1#6 G, 2" C SECONDARY FEEDER: 2 SETS OF 4#3/0 + 1#2 G, (2) 2" C BONDING JUMPERS & GROUNDING ELECTRODE CONDUCTOR: #2

IHS Whiteriver Hospital

200 W Hospital Drive
Whiteriver, Arizona, 85941

IHS Project #: 131445
IHS Contract #: 75H70123R00008
IHS Award Date: 02/02/2024

BASED ON PROGRAM OF REQUIREMENTS DATED [**03/26/22**], POR AMENDMENT DATED [**02/03/25**], AND ON SCHEMATIC DRAWINGS APPROVED [**11/19/24**].

SMITHGROUP

455 NORTH THIRD STREET
SUITE 250
PHOENIX, AZ 85004
602.265.2200
smithgroup.com

ISSUED FOR	DATE
BID ADDENDUM-G	12JUN26
BID ADDENDUM-E	28MAY26
BID ADDENDUM-A	16APR26
FINAL CONSTRUCTION DOCUMENTS	05MAR26

SEALS AND SIGNATURES

Registered Professional Engineer CERTIFICATE NO. 54673 DANIEL L. PETERSON Date Signed 06/12/26 ARIZONA U.S.A.

EXPIRES: 6-30-28

ELECTRICAL ONE LINE DIAGRAM - SES-B, 1 OF 2

Drawn By: Whittington Checked By: Baca

14904.000 PROJECT NUMBER

CD **E5.2.1** SHEET NUMBER

Plot Date: 6/12/2026 1:12:49 PM Whittington

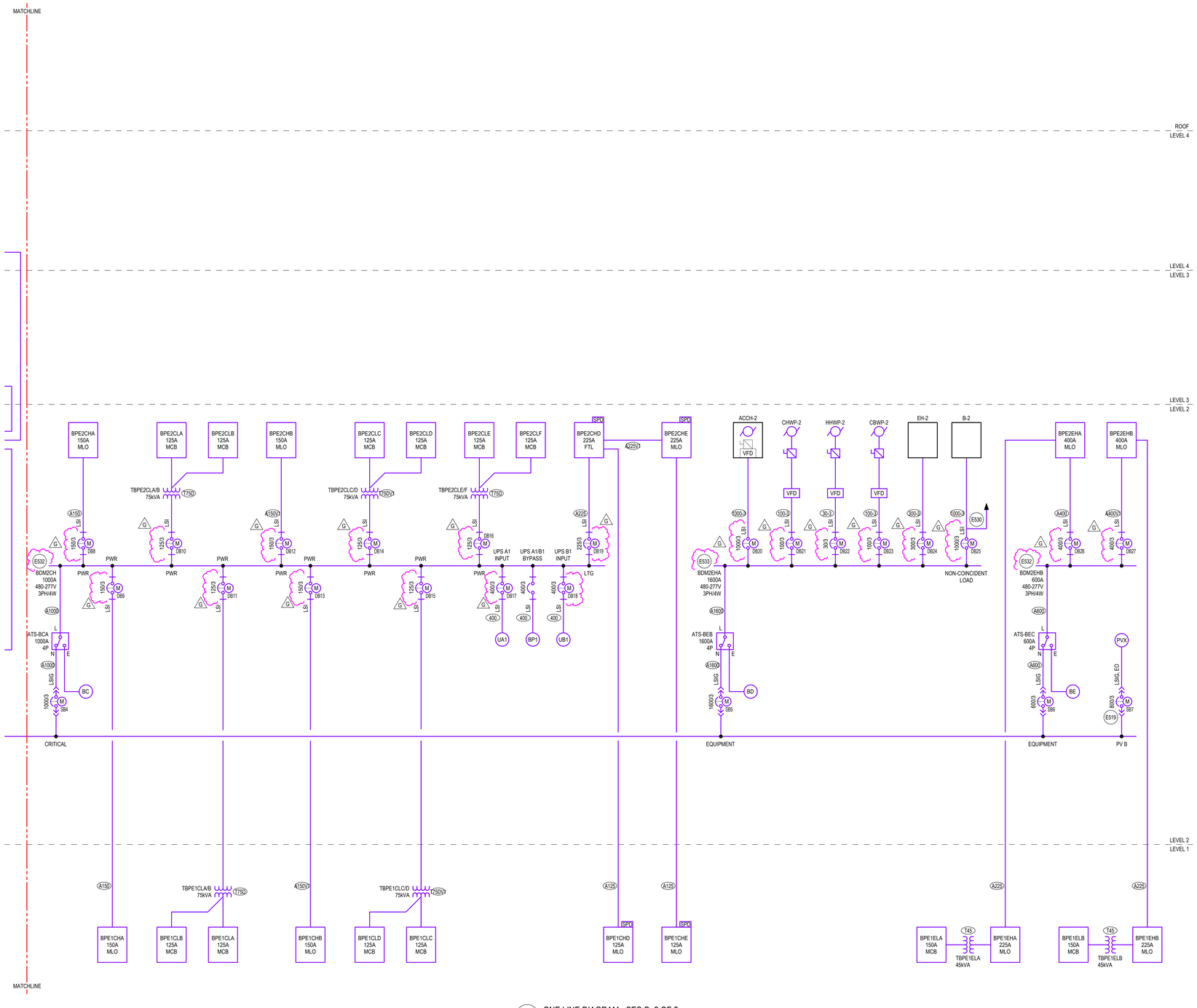

1 ONE LINE DIAGRAM - SES-B, 2 OF 2
SCALE: NOT TO SCALE

GENERAL SHEET NOTES

A. **ADDITIVE OPTION NO. 6, BASE BID** PROVIDE ALL UNDERGROUND CONDUITS ASSOCIATED WITH PHOTOVOLTAIC SYSTEM INCLUDING BUT NOT LIMITED TO, HANDHOLES, CONDUIT STUB-UPS BETWEEN MAIN ELECTRICAL ROOM, PHOTOVOLTAIC DISTRIBUTION PANEL AND AC COMBINER BOXES. CAP, PROTECT AND MARK CONDUIT LOCATIONS WITH DETECTABLE UNDERGROUND TAPE FOR IMPLEMENTATION OF FULLY FUNCTIONING PHOTOVOLTAIC SYSTEM IN THE FUTURE. A PLAN INDICATING UNDERGROUND CONDUIT SIZE/QUANTITY/ROUTING FOR FUTURE PHOTOVOLTAIC WILL BE REQUIRED FOR REVIEW PRIOR TO BACKFILL. ALL UNDERGROUND CONDUITS WILL BE REQUIRED TO BE SHOWN IN AS-BUILT DOCUMENTATION.

B. **ADDITIVE OPTION NO. 6, OPTION** PROVIDE PARKING SHADE CANOPY MOUNTED PHOTOVOLTAIC PANELS, DC CONDUCTORS, INVERTERS, AC COMBINER BOXES, PHOTOVOLTAIC DISTRIBUTION PANELBOARDS, AND ALL OTHER REQUIRED PHOTOVOLTAIC HARDWARE AND ACCESSORIES FOR THE CONSTRUCTION OF A COMPLETE AND FUNCTIONING PHOTOVOLTAIC SYSTEM AS NOTED IN CONSTRUCTION DRAWINGS AND SPECIFICATIONS. NOTE, PARKING SHADE CANOPIES ARE NOT PART OF PHOTOVOLTAIC SYSTEM OPTION AND ARE PROVIDED BY OTHERS.

C. SEE DRAWING E0.1 FOR ABBREVIATIONS, SYMBOLS, GENERAL NOTES. G

D. THE CONTRACTOR SHALL COORDINATE EXACT LOCATION OF EQUIPMENT POWER CONNECTIONS WITH EQUIPMENT INSTALLER PRIOR TO ROUGH-IN.

E. COORDINATE FINAL LOCATION OF MECHANICAL EQUIPMENT AND ASSOCIATED DISCONNECT SWITCHES, STARTERS, VFDS, CONTROL POWER AND OTHER POWER REQUIREMENTS WITH DIV 23 AND MECHANICAL DRAWINGS.

F. SEE MECHANICAL EQUIPMENT SCHEDULE FOR ASSOCIATED OVERCURRENT DEVICES, DISCONNECT SWITCHES, STARTERS AND WIRES.

G. VOLTAGE DROP SHALL BE LIMITED TO LESS THAN 3% FOR ALL BRANCH CIRCUITS AND 2% FOR ALL FEEDERS.

H. CONTRACTOR SHALL COORDINATE AND FIELD VERIFY REQUIREMENT OF NEUTRAL CONDUCTOR FOR ALL EQUIPMENT AND PROVIDE NEUTRAL CONDUCTOR AS NECESSARY.

I. ALL LIFE SAFETY AND LIGHTING PANELBOARDS SHALL BE EQUIPPED WITH TYPE 2 SPD.

J. ALL AUTOMATIC TRANSFER SWITCHES SHALL BE 4 POLE AND EQUIPPED WITH BYPASS ISOLATION.

K. ALL UTILITY TRANSFORMERS DESCRIBED AS NAVOPACHE TRANSFORMER TO BE COORDINATED WITH UTILITY AND PROVIDED BY UTILITY. COORDINATE ALL FINAL REQUIREMENTS AND AVAILABLE FAULT CURRENT CONTRIBUTIONS BASED ON SUPPLIED EQUIPMENT. BASIS OF DESIGN 2500KVA, AND 5%Z

L. BASIS OF DESIGN ELECTRICAL EQUIPMENT MANUFACTURERS ARE SIEMENS, ASCO, AND CATERPILLAR. EQUIVALENT EQUIPMENT FROM APPROVED MANUFACTURERS IS ACCEPTABLE, PER DIV 26 SPECIFICATIONS. G

SHEET KEYNOTES

E519	PV CIRCUIT BREAKER SHALL BE LOCATED AT LAST BUSSED SPACE. PROVIDE PERMANENT IDENTIFICATION PLAQUE INDICATING THE FOLLOWING: PV POWER SOURCE - DO NOT RELOCATE THIS CIRCUIT BREAKER
E530	PROVIDE SHUNT TRIP CIRCUIT BREAKER FOR INTERFACE WITH BOILER EMERGENCY SHUTDOWN EPO SWITCHES. REFER TO EMP2.2.G FOR ADDITIONAL INFORMATION.
E532	ELECTRICAL EQUIPMENT CONSTRUCTION = UL67 PANELBOARD IP20, TOUCH-SAFE, PLUG-IN MOLDED CASE CIRCUIT BREAKERS, ELECTRONIC TRIP UNIT
E533	ELECTRICAL EQUIPMENT CONSTRUCTION = UL891 SWITCHBOARD <= 600A IP20, TOUCH-SAFE, PLUG-IN MOLDED CASE CIRCUIT BREAKERS, ELECTRONIC TRIP UNIT > 600A FIXED MOUNT MOLDED CASE CIRCUIT BREAKERS, ELECTRONIC TRIP UNIT G

FEEDER SCHEDULE

"A" DENOTES ALUMINUM CONDUCTORS, ALL OTHER CONDUCTORS SHALL BE COPPER

30-3	3#10 + 1#10 G, 3/4" C
100-3	3#1 + 1#8 G, 1 1/2" C
300-3	3#350KCMIL + 1#4 G, 3" C
400	2 SETS OF 4#3/0 + 1#3 G, (2) 2" C
1000-3	3 SETS OF 3#400KCMIL + 1#2/0 G, (3) 3" C
A125	4#2/0 + 1#6 G, 2" C
A150	4#3/0 + 1#4 G, 2" C
A150V1	4#400KCMIL + 1#1/0 G, 2-1/2" C
A225	4#300KCMIL + 1#2 G, 2 1/2" C
A225V1	4#400KCMIL + 1#1/0 G, 2 1/2" C
A400	2 SETS OF 4#250KCMIL + 1#1 G, (2) 2 1/2" C
A400V1	2 SETS OF 4#500KCMIL + 1#2/0 G, (2) 3" C
A600	2 SETS OF 4#500KCMIL + 1#2/0 G, (2) 3" C
A1000	3 SETS OF 4#600KCMIL + 1#4/0 G, (3) 3 1/2" C
A1600	5 SETS OF 4#600KCMIL + 1#350KCMIL G, (5) 3 1/2" C
T45	45KVA TRANSFORMER, 480-208Y/120V, 3PH PRIMARY FEEDER: 3#3 + 1#8 G, 1 1/4" C SECONDARY FEEDER: 4#1/0 + 1#6 G, 2" C BONDING JUMPERS & GROUNDING ELECTRODE CONDUCTOR: #6
T75D	75KVA TRANSFORMER, 480-208Y/120V, 3PH PRIMARY FEEDER: 3#1/0 + 1#6 G, 1 1/2" C SECONDARY FEEDERS: 4#1/0 + 1#2 G, 2" C TO EACH PANEL BONDING JUMPERS & GROUNDING ELECTRODE CONDUCTOR: #2
T75DV1	75KVA TRANSFORMER, 480-208Y/120V, 3PH PRIMARY FEEDER: 3#3/0 + 1#4 G, 2" C SECONDARY FEEDERS: 4#1/0 + 1#2 G, 2" C TO EACH PANEL BONDING JUMPERS & GROUNDING ELECTRODE CONDUCTOR: #2

INDIAN HEALTH SERVICE · IHS · 1955 · DEPARTMENT OF HEALTH & HUMAN SERVICES, USA

IHS Whiteriver Hospital

200 W Hospital Drive
Whiteriver, Arizona, 85941

IHS Project #: 131445
IHS Contract #: 75H70123R00008
IHS Award Date: 02/02/2024

BASED ON PROGRAM OF REQUIREMENTS DATED [**03/26/22**], POR AMENDMENT DATED [**02/03/25**], AND ON SCHEMATIC DRAWINGS APPROVED [**11/19/24**].

SMITHGROUP

455 NORTH THIRD STREET
SUITE 250
PHOENIX, AZ 85004
602.265.2200
smithgroup.com

ISSUED FOR	DATE
BID ADDENDUM-G	12JUN26
BID ADDENDUM-E	28MAY26
BID ADDENDUM-A	16APR26
FINAL CONSTRUCTION DOCUMENTS	05MAR26

SEALS AND SIGNATURES

Registered Professional Engineer CERTIFICATE NO. 54673 DANIEL L. PETERSON State Expires 06-30-28 ARIZONA U.S.A.

EXPIRES: 6-30-28

ELECTRICAL ONE LINE DIAGRAM - SES-B, 2 OF 2

Drawn By: Whittington Checked By: Baca

14904.000
PROJECT NUMBER

CD **E5.2.2**
SHEET NUMBER

Plot Date: 6/12/2026 1:12:54 PM Whittington

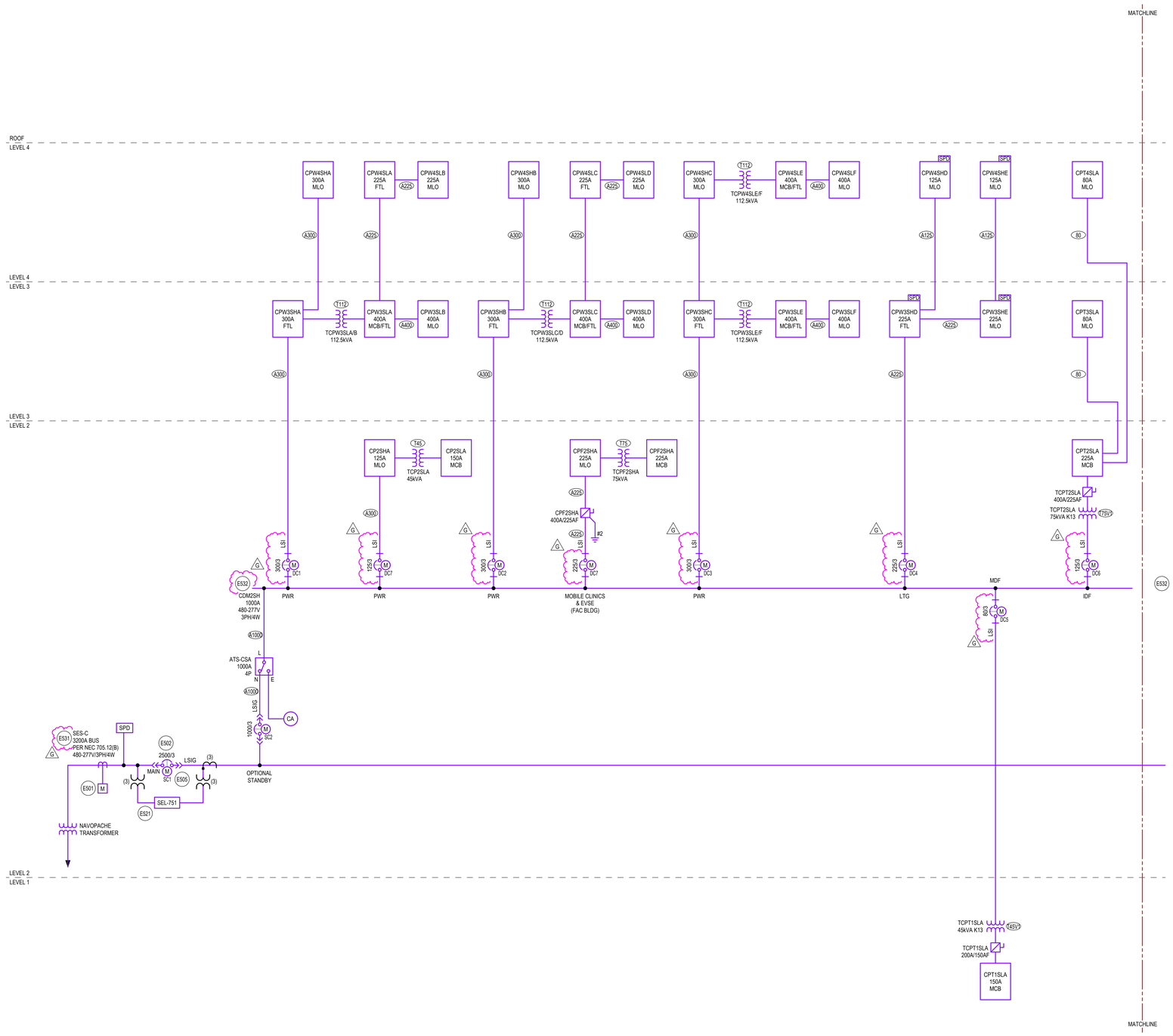

1 ONE LINE DIAGRAM - SES-C, 1 OF 2
SCALE: NOT TO SCALE

GENERAL SHEET NOTES

A. **ADDITIVE OPTION NO. 6, BASE BID** PROVIDE ALL UNDERGROUND CONDUITS ASSOCIATED WITH PHOTOVOLTAIC SYSTEM INCLUDING BUT NOT LIMITED TO, HANDHOLES, CONDUIT STUB-UPS BETWEEN MAIN ELECTRICAL ROOM, PHOTOVOLTAIC DISTRIBUTION PANEL AND AC COMBINER BOXES. CAP, PROTECT AND MARK CONDUIT LOCATIONS WITH DETECTABLE UNDERGROUND TAPE FOR IMPLEMENTATION OF FULLY FUNCTIONING PHOTOVOLTAIC SYSTEM IN THE FUTURE. A PLAN INDICATING UNDERGROUND CONDUIT SIZE/QUANTITY/ROUTING FOR FUTURE PHOTOVOLTAIC WILL BE REQUIRED FOR REVIEW PRIOR TO BACKFILL. ALL UNDERGROUND CONDUITS WILL BE REQUIRED TO BE SHOWN IN AS-BUILT DOCUMENTATION.

B. **ADDITIVE OPTION NO. 6, OPTION** PROVIDE PARKING SHADE CANOPY MOUNTED PHOTOVOLTAIC PANELS, DC CONDUCTORS, INVERTERS, AC COMBINER BOXES, PHOTOVOLTAIC DISTRIBUTION PANELBOARDS, AND ALL OTHER REQUIRED PHOTOVOLTAIC HARDWARE AND ACCESSORIES FOR THE CONSTRUCTION OF A COMPLETE AND FUNCTIONING PHOTOVOLTAIC SYSTEM AS NOTED IN CONSTRUCTION DRAWINGS AND SPECIFICATIONS. NOTE, PARKING SHADE CANOPIES ARE NOT PART OF PHOTOVOLTAIC SYSTEM OPTION AND ARE PROVIDED BY OTHERS.

C. SEE DRAWING E0.1 FOR ABBREVIATIONS, SYMBOLS, GENERAL NOTES. G

D. THE CONTRACTOR SHALL COORDINATE EXACT LOCATION OF EQUIPMENT POWER CONNECTIONS WITH EQUIPMENT INSTALLER PRIOR TO ROUGH-IN.

E. COORDINATE FINAL LOCATION OF MECHANICAL EQUIPMENT AND ASSOCIATED DISCONNECT SWITCHES, STARTERS, VFDS, CONTROL POWER AND OTHER POWER REQUIREMENTS WITH DIV 23 AND MECHANICAL DRAWINGS.

F. SEE MECHANICAL EQUIPMENT SCHEDULE FOR ASSOCIATED OVERCURRENT DEVICES, DISCONNECT SWITCHES, STARTERS AND WIRES.

G. VOLTAGE DROP SHALL BE LIMITED TO LESS THAN 3% FOR ALL BRANCH CIRCUITS AND 2% FOR ALL FEEDERS.

H. CONTRACTOR SHALL COORDINATE AND FIELD VERIFY REQUIREMENT OF NEUTRAL CONDUCTOR FOR ALL EQUIPMENT AND PROVIDE NEUTRAL CONDUCTOR AS NECESSARY.

I. ALL LIFE SAFETY AND LIGHTING PANELBOARDS SHALL BE EQUIPPED WITH TYPE 2 SPD.

J. ALL AUTOMATIC TRANSFER SWITCHES SHALL BE 4 POLE AND EQUIPPED WITH BYPASS ISOLATION.

K. ALL UTILITY TRANSFORMERS DESCRIBED AS NAVOPACHE TRANSFORMER TO BE COORDINATED WITH UTILITY AND PROVIDED BY UTILITY. COORDINATE ALL FINAL REQUIREMENTS AND AVAILABLE FAULT CURRENT CONTRIBUTIONS BASED ON SUPPLIED EQUIPMENT. BASIS OF DESIGN 2500KVA, AND 5%Z.

L. BASIS OF DESIGN ELECTRICAL EQUIPMENT MANUFACTURERS ARE SIEMENS, ASCO, AND CATERPILLAR. EQUIVALENT EQUIPMENT FROM APPROVED MANUFACTURERS IS ACCEPTABLE, PER DIV 26 SPECIFICATIONS. G

SHEET KEYNOTES

E501 NAVOPACHE UTILITY METER. METER SHALL BE EQUIPPED WITH CAPABILITY TO INTERFACE WITH BMS. ELECTRICAL CONTRACTOR SHALL PROVIDE REQUIRED CONDUIT AND COMMUNICATION WIRING FROM METER TO POINT OF INTERFACE WITH BMS.

E502 COMPLIANCE WITH "NEC 240.87 ARC ENERGY REDUCTION" REQUIRED. REDUCTION METHOD SHALL ALLOW FOR REQUIRED SELECTIVE DEVICE COORDINATION AND ARC FLASH REQUIREMENTS. REFER TO ELECTRICAL SPECIFICATIONS FOR ADDITIONAL INFORMATION.

E505 PROVIDE PERMANENT IDENTIFICATION PLAQUE INDICATING THE FOLLOWING: ELECTRICAL SERVICE #3 OF 5. GENERATORS LOCATED IN ELECTRICAL EQUIPMENT YARD, GENERATOR DISCONNECTS LOCATED IN ADJACENT ELECTRICAL ROOM IN GMDB. PV DISCONNECT LOCATED AT END OF THIS ELECTRICAL EQUIPMENT LINEUP.

E521 PROVIDE RELAY PROTECTION ELEMENTS REQUIRED BY UTILITY AND MULTIPLE GENERATOR AND PV MONITORING AND CONTROL SYSTEM MANUFACTURER. INTEGRATE SEL RELAY AND PROGRAMMING INTO MULTIPLE GENERATOR AND PV MONITORING SYSTEM AND CIRCUIT BREAKER. PROVIDE AND PROGRAM PROTECTION ELEMENT SET POINTS AND LOGIC WITHIN THE RELAY. REFER TO SEL-751 DETAIL FOR ADDITIONAL INFORMATION.

E531 ELECTRICAL EQUIPMENT CONSTRUCTION = UL891 REAR CONNECTED SWITCHBOARD DRAW-OUT LOW VOLTAGE POWER CIRCUIT BREAKERS

E532 ELECTRICAL EQUIPMENT CONSTRUCTION = UL67 PANELBOARD IP20, TOUCH-SAFE, PLUG-IN MOLDED CASE CIRCUIT BREAKERS, ELECTRONIC TRIP UNIT G

FEEDER SCHEDULE

"X" DENOTES ALUMINUM CONDUCTORS, ALL OTHER CONDUCTORS SHALL BE COPPER

80	4#3 + 1#8 G, 1 1/4" C
A125	4#2/0 + 1#6 G, 2" C
A225	4#300KCMIL + 1#2 G, 2 1/2" C
A300	4#500KCMIL + 1#2 G, 3" C
A400	2 SETS OF 4#250KCMIL + 1#1 G, (2) 2 1/2" C
A1000	3 SETS OF 4#600KCMIL + 1#4/0 G, (3) 3 1/2" C
T45	45KVA TRANSFORMER, 480-208Y/120V, 3PH PRIMARY FEEDER: 3#3 + 1#8 G, 1 1/4" C SECONDARY FEEDER: 4#1/0 + 1#6 G, 2" C BONDING JUMPERS & GROUNDING ELECTRODE CONDUCTOR: #6
T45V1	45KVA TRANSFORMER, 480-208Y/120V, 3PH PRIMARY FEEDER: 3#1 + 1#4 G, 1 1/2" C SECONDARY FEEDER: 4#1/0 + 1#6 G, 2" C BONDING JUMPERS & GROUNDING ELECTRODE CONDUCTOR: #6
T75	75KVA TRANSFORMER, 480-208Y/120V, 3PH PRIMARY FEEDER: 3#1/0 + 1#6 G, 1 1/2" C SECONDARY FEEDER: 4#4/0 + 1#2 G, 2 1/2" C BONDING JUMPERS & GROUNDING ELECTRODE CONDUCTOR: #2
T75V1	75KVA TRANSFORMER, 480-208Y/120V, 3PH PRIMARY FEEDER: 3#3/0 + 1#4 G, 2" C SECONDARY FEEDER: 4#4/0 + 1#2 G, 2 1/2" C BONDING JUMPERS & GROUNDING ELECTRODE CONDUCTOR: #2
T112	112.5KVA TRANSFORMER, 480-208Y/120V, 3PH PRIMARY FEEDER: 3#3/0 + 1#6 G, 2" C SECONDARY FEEDER: 2 SETS OF 4#3/0 + 1#2 G, (2) 2" C BONDING JUMPERS & GROUNDING ELECTRODE CONDUCTOR: #2

IHS Whiteriver Hospital

200 W Hospital Drive
Whiteriver, Arizona, 85941

IHS Project #: 131445
IHS Contract #: 75H70123R00008
IHS Award Date: 02/02/2024

BASED ON PROGRAM OF REQUIREMENTS DATED [**03/26/22**], POR AMENDMENT DATED [**02/03/25**], AND ON SCHEMATIC DRAWINGS APPROVED [**11/19/24**].

SMITHGROUP

455 NORTH THIRD STREET
SUITE 250
PHOENIX, AZ 85004
602.265.2200
smithgroup.com

ISSUED FOR	DATE
BID ADDENDUM-G	12JUN26
BID ADDENDUM-E	28MAY26
BID ADDENDUM-A	15APR26
FINAL CONSTRUCTION DOCUMENTS	05MAR26

SEALS AND SIGNATURES

Registered Professional Engineer CERTIFICATE No. 54673 DANIEL L. PETERSON Date Signed 06-12-26 ARIZONA, U.S.A.

EXPIRES: 6-30-28

ELECTRICAL ONE LINE DIAGRAM - SES-C, 1 OF 2

Drawn By: Whittington Checked By: Baca

14904.000

PROJECT NUMBER

CD **E5.3.1**

SHEET NUMBER

Plot Date: 6/12/2026 1:12:58 PM Whittington

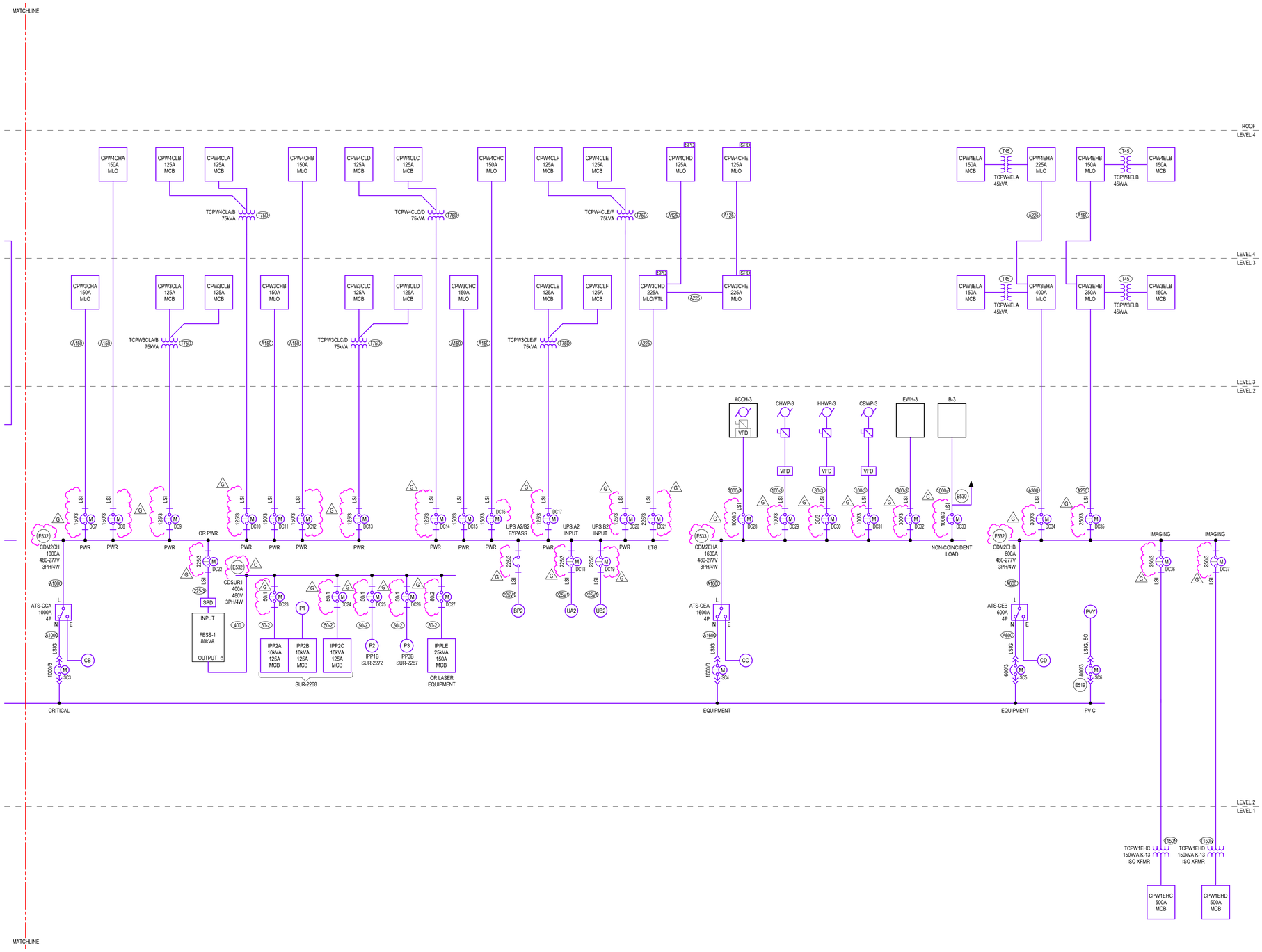

1 ONE LINE DIAGRAM - SES-C, 2 OF 2
SCALE: NOT TO SCALE

GENERAL SHEET NOTES

A. **ADDITIVE OPTION NO. 6, BASE BID** PROVIDE ALL UNDERGROUND CONDUITS ASSOCIATED WITH PHOTOVOLTAIC SYSTEM INCLUDING BUT NOT LIMITED TO, HANDHOLES, CONDUIT STUB-UPS BETWEEN MAIN ELECTRICAL ROOM, PHOTOVOLTAIC DISTRIBUTION PANEL AND AC COMBINER BOXES. CAP, PROTECT AND MARK CONDUIT LOCATIONS WITH DETECTABLE UNDERGROUND TAPE FOR IMPLEMENTATION OF FULLY FUNCTIONING PHOTOVOLTAIC SYSTEM IN THE FUTURE. A PLAN INDICATING UNDERGROUND CONDUIT SIZE/QUANTITY/ROUTING FOR FUTURE PHOTOVOLTAIC WILL BE REQUIRED FOR REVIEW PRIOR TO BACKFILL. ALL UNDERGROUND CONDUITS WILL BE REQUIRED TO BE SHOWN IN AS-BUILT DOCUMENTATION.

B. **ADDITIVE OPTION NO. 6, OPTION** PROVIDE PARKING SHADE CANOPY MOUNTED PHOTOVOLTAIC PANELS, DC CONDUCTORS, INVERTERS, AC COMBINER BOXES, PHOTOVOLTAIC DISTRIBUTION PANELBOARDS, AND ALL OTHER REQUIRED PHOTOVOLTAIC HARDWARE AND ACCESSORIES FOR THE CONSTRUCTION OF A COMPLETE AND FUNCTIONING PHOTOVOLTAIC SYSTEM AS NOTED IN CONSTRUCTION DRAWINGS AND SPECIFICATIONS. NOTE, PARKING SHADE CANOPIES ARE NOT PART OF PHOTOVOLTAIC SYSTEM OPTION AND ARE PROVIDED BY OTHERS.

C. SEE DRAWING E0.1 FOR ABBREVIATIONS, SYMBOLS, GENERAL NOTES. G

D. THE CONTRACTOR SHALL COORDINATE EXACT LOCATION OF EQUIPMENT POWER CONNECTIONS WITH EQUIPMENT INSTALLER PRIOR TO ROUGH-IN.

E. COORDINATE FINAL LOCATION OF MECHANICAL EQUIPMENT AND ASSOCIATED DISCONNECT SWITCHES, STARTERS, VFDS, CONTROL POWER AND OTHER POWER REQUIREMENTS WITH DIV 23 AND MECHANICAL DRAWINGS.

F. SEE MECHANICAL EQUIPMENT SCHEDULE FOR ASSOCIATED OVERCURRENT DEVICES, DISCONNECT SWITCHES, STARTERS AND WIRES.

G. VOLTAGE DROP SHALL BE LIMITED TO LESS THAN 3% FOR ALL BRANCH CIRCUITS AND 2% FOR ALL FEEDERS.

H. CONTRACTOR SHALL COORDINATE AND FIELD VERIFY REQUIREMENT OF NEUTRAL CONDUCTOR FOR ALL EQUIPMENT AND PROVIDE NEUTRAL CONDUCTOR AS NECESSARY.

I. ALL LIFE SAFETY AND LIGHTING PANELBOARDS SHALL BE EQUIPPED WITH TYPE 2 SPD.

J. ALL AUTOMATIC TRANSFER SWITCHES SHALL BE 4 POLE AND EQUIPPED WITH BYPASS ISOLATION.

K. ALL UTILITY TRANSFORMERS DESCRIBED AS NAVOPACHE TRANSFORMER TO BE COORDINATED WITH UTILITY AND PROVIDED BY UTILITY. COORDINATE ALL FINAL REQUIREMENTS AND AVAILABLE FAULT CURRENT CONTRIBUTIONS BASED ON SUPPLIED EQUIPMENT. BASIS OF DESIGN 2500KVA, AND 5%Z.

L. BASIS OF DESIGN ELECTRICAL EQUIPMENT MANUFACTURERS ARE SIEMENS, ASCO, AND CATERPILLAR. EQUIVALENT EQUIPMENT FROM APPROVED MANUFACTURERS IS ACCEPTABLE, PER DIV 26 SPECIFICATIONS. G

SHEET KEYNOTES

E519 PV CIRCUIT BREAKER SHALL BE LOCATED AT LAST BUSSED SPACE. PROVIDE PERMANENT IDENTIFICATION PLAQUE INDICATING THE FOLLOWING: PV POWER SOURCE - DO NOT RELOCATE THIS CIRCUIT BREAKER

E530 PROVIDE SHUNT TRIP CIRCUIT BREAKER FOR INTERFACE WITH BOILER EMERGENCY SHUTDOWN EPO SWITCHES. REFER TO EMP2.2.G FOR ADDITIONAL INFORMATION.

E532 ELECTRICAL EQUIPMENT CONSTRUCTION = UL67 PANELBOARD IP20, TOUCH-SAFE, PLUG-IN MOLDED CASE CIRCUIT BREAKERS, ELECTRONIC TRIP UNIT

E533 ELECTRICAL EQUIPMENT CONSTRUCTION = UL891 SWITCHBOARD </= 600A IP20, TOUCH-SAFE, PLUG-IN MOLDED CASE CIRCUIT BREAKERS, ELECTRONIC TRIP UNIT > 600A FIXED MOUNT MOLDED CASE CIRCUIT BREAKERS, ELECTRONIC TRIP UNIT G

FEEDER SCHEDULE

"A" DENOTES ALUMINUM CONDUCTORS, ALL OTHER CONDUCTORS SHALL BE COPPER

30-3	3#10 + 1#10 G, 3/4" C
50-2	2#6 + 1#10 G, 3/4" C
80-2	2#3 + 1#8 G, 1 1/4" C
100-3	3#1 + 1#8 G, 1 1/2" C
225-3	3#4/0 + 1#4 G, 2" C
225V1	4#250KCMIL + 1#3 G, 2 1/2" C
300-3	3#350KCMIL + 1#4 G, 3" C
400	2 SETS OF 4#3/0 + 1#3 G, (2) 2" C
1000-3	3 SETS OF 3#400KCMIL + 1#2/0 G, (3) 3" C
A125	4#2/0 + 1#6 G, 2" C
A150	4#3/0 + 1#4 G, 2" C
A225	4#300KCMIL + 1#2 G, 2 1/2" C
A250	4#350KCMIL + 1#2 G, 2 1/2" C
A300	4#500KCMIL + 1#2 G, 3" C
A600	2 SETS OF 4#500KCMIL + 1#2/0 G, (2) 3" C
A1000	3 SETS OF 4#600KCMIL + 1#4/0 G, (3) 3 1/2" C
A1600	5 SETS OF 4#600KCMIL + 1#350KCMIL G, (5) 3 1/2" C
T45	45KVA TRANSFORMER, 480-208Y/120V, 3PH PRIMARY FEEDER: 3#3 + 1#8 G, 1 1/4" C SECONDARY FEEDER: 4#1/0 + 1#6 G, 2" C BONDING JUMPERS & GROUNDING ELECTRODE CONDUCTOR: #6
T75D	75KVA TRANSFORMER, 480-208Y/120V, 3PH PRIMARY FEEDER: 3#1/0 + 1#6 G, 1 1/2" C SECONDARY FEEDERS: 4#1/0 + 1#2 G, 2" C TO EACH PANEL BONDING JUMPERS & GROUNDING ELECTRODE CONDUCTOR: #2
T150N	150KVA TRANSFORMER, 480-208Y/120V, 3PH PRIMARY FEEDER: 3#250KCMIL + 1#4 G, 2 1/2" C SECONDARY FEEDER: 2 SETS OF 3#250KCMIL, 1#500KCMIL N + 1/0 G, (2) 3" C BONDING JUMPERS & GROUNDING ELECTRODE CONDUCTOR: #1/0

INDIAN HEALTH SERVICE · IHS · 1955 · DEPARTMENT OF HEALTH & HUMAN SERVICES, USA

IHS Whiteriver Hospital

200 W Hospital Drive
Whiteriver, Arizona, 85941

IHS Project #: 131445
IHS Contract #: 75H70123R00008
IHS Award Date: 02/02/2024

BASED ON PROGRAM OF REQUIREMENTS DATED [**03/26/22**], POR AMENDMENT DATED [**02/03/25**], AND ON SCHEMATIC DRAWINGS APPROVED [**11/19/24**].

SMITHGROUP

455 NORTH THIRD STREET
SUITE 250
PHOENIX, AZ 85004
602.265.2200
smithgroup.com

ISSUED FOR	DATE
BID ADDENDUM-G	12JUN26
BID ADDENDUM-E	28MAY26
BID ADDENDUM-A	16APR26
FINAL CONSTRUCTION DOCUMENTS	05MAR26

SEALS AND SIGNATURES

Professional Engineer CERTIFICATE NO. 54673 DANIEL L. PETERSON State of ARIZONA U.S.A.

EXPIRES: 6-30-28

ELECTRICAL ONE LINE DIAGRAM - SES-C, 2 OF 2

Drawn By: Whittington Checked By: Baca

14904.000

PROJECT NUMBER

CD **E5.3.2**

SHEET NUMBER

Plot Date: 6/12/2026 1:13:03 PM Whittington

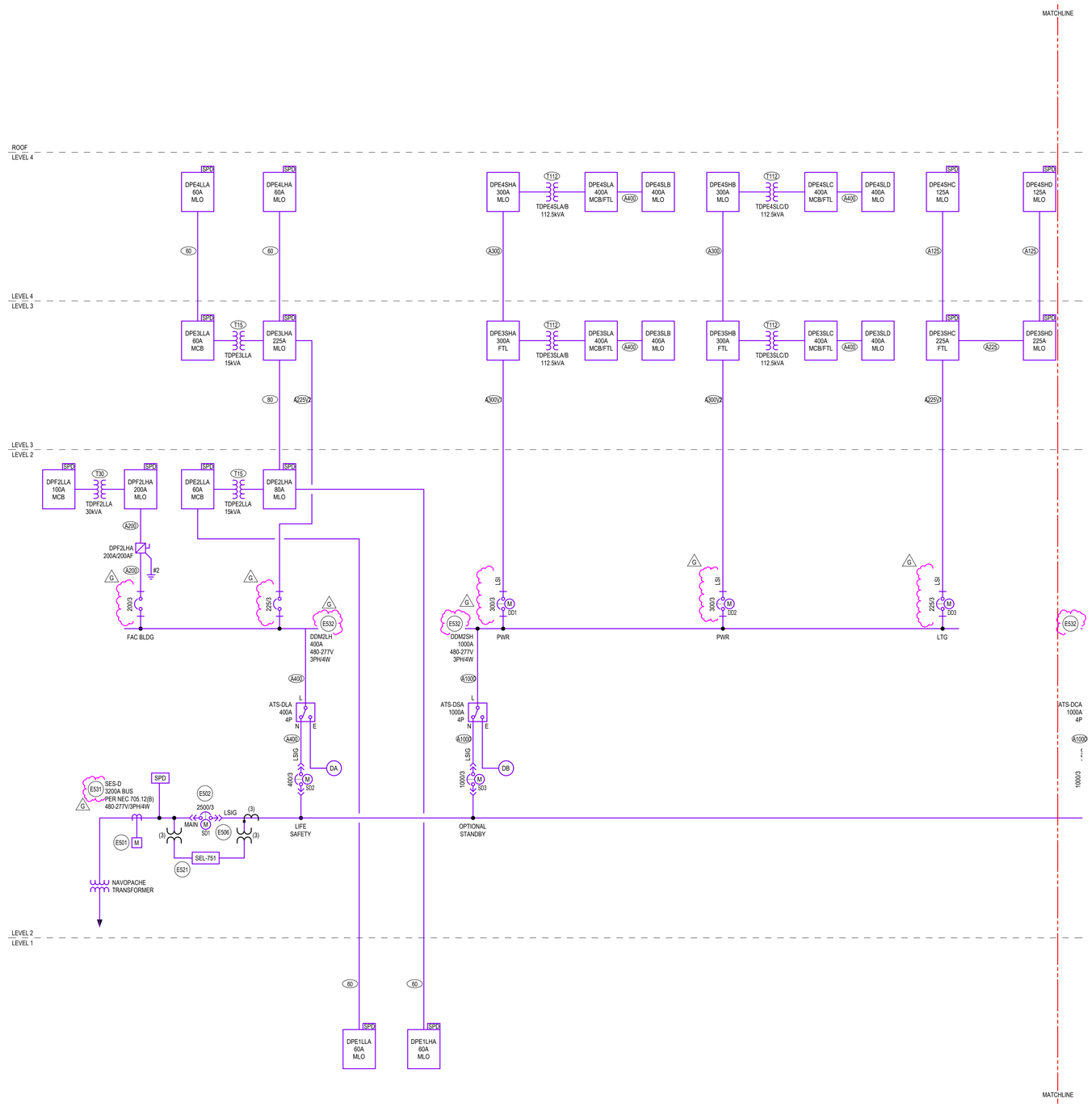

1 ONE LINE DIAGRAM - SES-D, 1 OF 2
SCALE: NOT TO SCALE

GENERAL SHEET NOTES

A. **ADDITIVE OPTION NO. 6, BASE BID** PROVIDE ALL UNDERGROUND CONDUITS ASSOCIATED WITH PHOTOVOLTAIC SYSTEM INCLUDING BUT NOT LIMITED TO, HANDHOLES, CONDUIT STUB-UPS BETWEEN MAIN ELECTRICAL ROOM, PHOTOVOLTAIC DISTRIBUTION PANEL AND AC COMBINER BOXES. CAP, PROTECT AND MARK CONDUIT LOCATIONS WITH DETECTABLE UNDERGROUND TAPE FOR IMPLEMENTATION OF FULLY FUNCTIONING PHOTOVOLTAIC SYSTEM IN THE FUTURE. A PLAN INDICATING UNDERGROUND CONDUIT SIZE/QUANTITY/ROUTING FOR FUTURE PHOTOVOLTAIC WILL BE REQUIRED FOR REVIEW PRIOR TO BACKFILL. ALL UNDERGROUND CONDUITS WILL BE REQUIRED TO BE SHOWN IN AS-BUILT DOCUMENTATION.

B. **ADDITIVE OPTION NO. 6, OPTION** PROVIDE PARKING SHADE CANOPY MOUNTED PHOTOVOLTAIC PANELS, DC CONDUCTORS, INVERTERS, AC COMBINER BOXES, PHOTOVOLTAIC DISTRIBUTION PANELBOARDS, AND ALL OTHER REQUIRED PHOTOVOLTAIC HARDWARE AND ACCESSORIES FOR THE CONSTRUCTION OF A COMPLETE AND FUNCTIONING PHOTOVOLTAIC SYSTEM AS NOTED IN CONSTRUCTION DRAWINGS AND SPECIFICATIONS. NOTE, PARKING SHADE CANOPIES ARE NOT PART OF PHOTOVOLTAIC SYSTEM OPTION AND ARE PROVIDED BY OTHERS.

C. SEE DRAWING E0.1 FOR ABBREVIATIONS, SYMBOLS, GENERAL NOTES. G

D. THE CONTRACTOR SHALL COORDINATE EXACT LOCATION OF EQUIPMENT POWER CONNECTIONS WITH EQUIPMENT INSTALLER PRIOR TO ROUGH-IN.

E. COORDINATE FINAL LOCATION OF MECHANICAL EQUIPMENT AND ASSOCIATED DISCONNECT SWITCHES, STARTERS, VFDS, CONTROL POWER AND OTHER POWER REQUIREMENTS WITH DIV 23 AND MECHANICAL DRAWINGS.

F. SEE MECHANICAL EQUIPMENT SCHEDULE FOR ASSOCIATED OVERCURRENT DEVICES, DISCONNECT SWITCHES, STARTERS AND WIRES.

G. VOLTAGE DROP SHALL BE LIMITED TO LESS THAN 3% FOR ALL BRANCH CIRCUITS AND 2% FOR ALL FEEDERS.

H. CONTRACTOR SHALL COORDINATE AND FIELD VERIFY REQUIREMENT OF NEUTRAL CONDUCTOR FOR ALL EQUIPMENT AND PROVIDE NEUTRAL CONDUCTOR AS NECESSARY.

I. ALL LIFE SAFETY AND LIGHTING PANELBOARDS SHALL BE EQUIPPED WITH TYPE 2 SPD.

J. ALL AUTOMATIC TRANSFER SWITCHES SHALL BE 4 POLE AND EQUIPPED WITH BYPASS ISOLATION.

K. ALL UTILITY TRANSFORMERS DESCRIBED AS NAVOPACHE TRANSFORMER TO BE COORDINATED WITH UTILITY AND PROVIDED BY UTILITY. COORDINATE ALL FINAL REQUIREMENTS AND AVAILABLE FAULT CURRENT CONTRIBUTIONS BASED ON SUPPLIED EQUIPMENT. BASIS OF DESIGN 2500KVA, AND 5%Z.

L. BASIS OF DESIGN ELECTRICAL EQUIPMENT MANUFACTURERS ARE SIEMENS, ASCO, AND CATERPILLAR. EQUIVALENT EQUIPMENT FROM APPROVED MANUFACTURERS IS ACCEPTABLE, PER DIV 26 SPECIFICATIONS. G

SHEET KEYNOTES

E501	NAVOPACHE UTILITY METER. METER SHALL BE EQUIPPED WITH CAPABILITY TO INTERFACE WITH BMS. ELECTRICAL CONTRACTOR SHALL PROVIDE REQUIRED CONDUIT AND COMMUNICATION WIRING FROM METER TO POINT OF INTERFACE WITH BMS.
E502	COMPLIANCE WITH "NEC 240.87 ARC ENERGY REDUCTION" REQUIRED. REDUCTION METHOD SHALL ALLOW FOR REQUIRED SELECTIVE DEVICE COORDINATION AND ARC FLASH REQUIREMENTS. REFER TO ELECTRICAL SPECIFICATIONS FOR ADDITIONAL INFORMATION.
E506	PROVIDE PERMANENT IDENTIFICATION PLAQUE INDICATING THE FOLLOWING: ELECTRICAL SERVICE #4 OF 5, GENERATORS LOCATED IN ELECTRICAL EQUIPMENT YARD, GENERATOR DISCONNECTS LOCATED IN ADJACENT ELECTRICAL ROOM IN GMDB, PV DISCONNECT LOCATED AT END OF THIS ELECTRICAL EQUIPMENT LINEUP.
E521	PROVIDE RELAY PROTECTION ELEMENTS REQUIRED BY UTILITY AND MULTIPLE GENERATOR AND PV MONITORING AND CONTROL SYSTEM MANUFACTURER. INTEGRATE SEL RELAY AND PROGRAMMING INTO MULTIPLE GENERATOR AND PV MONITORING SYSTEM AND CIRCUIT BREAKER. PROVIDE AND PROGRAM PROTECTION ELEMENT SET POINTS AND LOGIC WITHIN THE RELAY. REFER TO SEL-751 DETAIL FOR ADDITIONAL INFORMATION.
E531	ELECTRICAL EQUIPMENT CONSTRUCTION = UL891 REAR CONNECTED SWITCHBOARD DRAW-OUT LOW VOLTAGE POWER CIRCUIT BREAKERS
E532	ELECTRICAL EQUIPMENT CONSTRUCTION = UL67 PANELBOARD IP20, TOUCH-SAFE, PLUG-IN MOLDED CASE CIRCUIT BREAKERS, ELECTRONIC TRIP UNIT
G	

FEEDER SCHEDULE

"A" DENOTES ALUMINUM CONDUCTORS, ALL OTHER CONDUCTORS SHALL BE COPPER

60	4#4 + 1#10 G, 1 1/4" C
80	4#3 + 1#8 G, 1 1/4" C
A125	4#2/0 + 1#6 G, 2" C
A200	4#250KCMIL + 1#4 G, 2 1/2" C
A225	4#300KCMIL + 1#2 G, 2 1/2" C
A225V1	4#400KCMIL + 1#1/0 G, 2 1/2" C
A225V2	4#350KCMIL + 1#1/0 G, 2 1/2" C
A300	4#500KCMIL + 1#2 G, 3" C
A300V1	4#600KCMIL + 1#1 G, 3" C
A300V2	2 SETS OF 4#400KCMIL + 1#2/0 G, (2) 2 1/2" C
A400	2 SETS OF 4#250KCMIL + 1#1 G, (2) 2 1/2" C
A1000	3 SETS OF 4#600KCMIL + 1#4/0 G, (3) 3 1/2" C
T15	15KVA TRANSFORMER, 480-208Y/120V, 3PH PRIMARY FEEDER: 3#10 + 1#10 G, 3/4" C SECONDARY FEEDER: 4#4 + 1#8 G, 1 1/4" C BONDING JUMPERS & GROUNDING ELECTRODE CONDUCTOR: #8
T30	30KVA TRANSFORMER, 480-208Y/120V, 3PH PRIMARY FEEDER: 3#6 + 1#10 G, 3/4" C SECONDARY FEEDER: 4#1 + 1#6 G, 1 1/2" C BONDING JUMPERS & GROUNDING ELECTRODE CONDUCTOR: #6
T112	112.5KVA TRANSFORMER, 480-208Y/120V, 3PH PRIMARY FEEDER: 3#3/0 + 1#6 G, 2" C SECONDARY FEEDER: 2 SETS OF 4#3/0 + 1#2 G, (2) 2" C BONDING JUMPERS & GROUNDING ELECTRODE CONDUCTOR: #2

IHS Whiteriver Hospital

200 W Hospital Drive
Whiteriver, Arizona, 85941

IHS Project #: 131445
IHS Contract #: 75H70123R00008
IHS Award Date: 02/02/2024

BASED ON PROGRAM OF REQUIREMENTS DATED [**03/26/22**], POR AMENDMENT DATED [**02/03/25**], AND ON SCHEMATIC DRAWINGS APPROVED [**11/19/24**].

SMITHGROUP

455 NORTH THIRD STREET
SUITE 250
PHOENIX, AZ 85004
602.265.2200
smithgroup.com

ISSUED FOR	DATE
BID ADDENDUM-G	12JUN26
BID ADDENDUM-E	28MAY26
BID ADDENDUM-A	16APR26
FINAL CONSTRUCTION DOCUMENTS	05MAR26

SEALS AND SIGNATURES

Registered Professional Engineer (Electrical) CERTIFICATE NO. 54673 DANIEL L. PETERSON Date Signed 06-12-26 ARIZONA U.S.A.

EXPIRES: 6-30-28

ELECTRICAL ONE LINE DIAGRAM - SES-D, 1 OF 2

Drawn By: Whittington Checked By: Baca

14904.000

PROJECT NUMBER

CD **E5.4.1**

SHEET NUMBER

Plot Date: 6/12/2026 1:13:07 PM Whittington

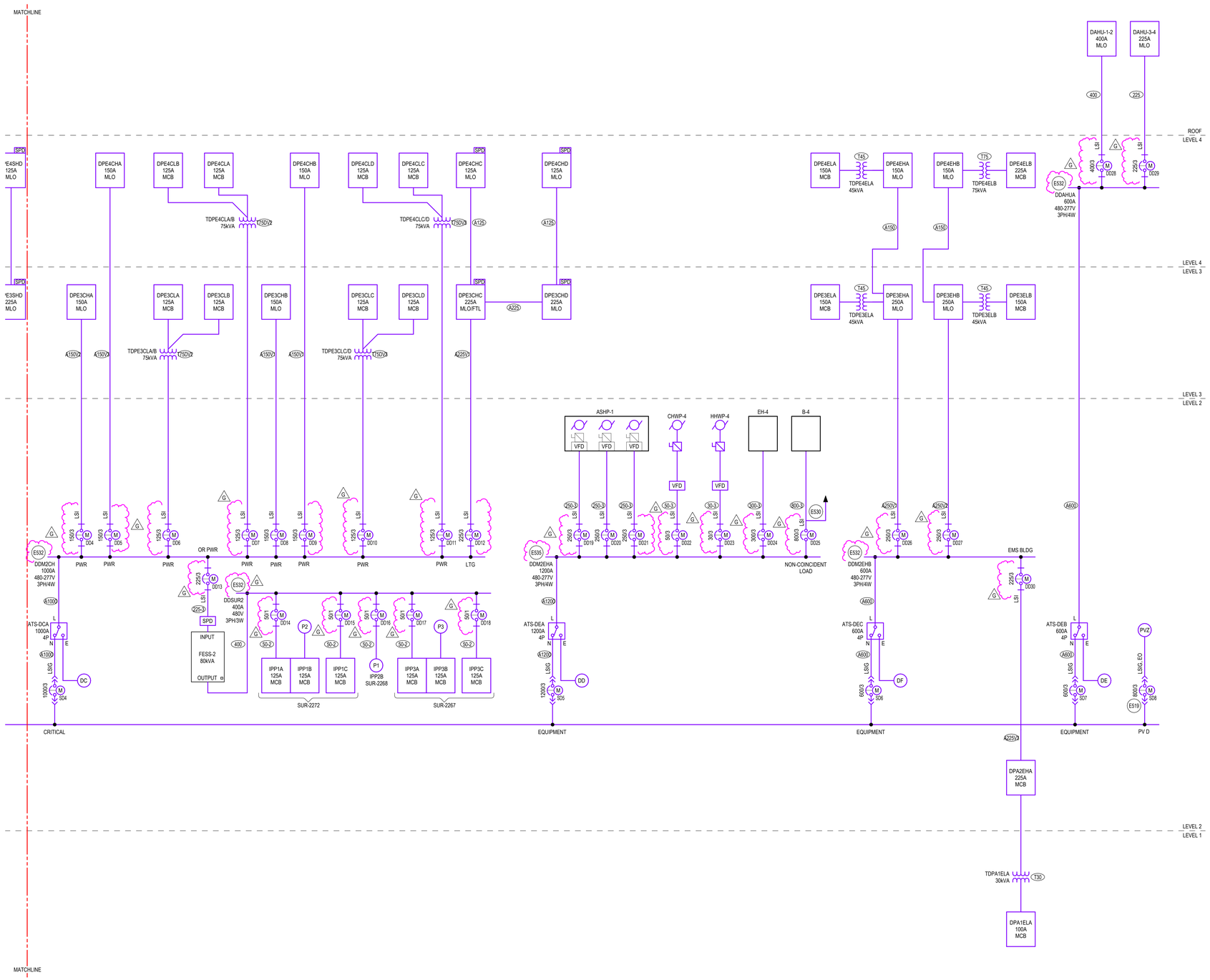

1 ONE LINE DIAGRAM - SES-D, 2 OF 2
SCALE: NOT TO SCALE

GENERAL SHEET NOTES

A. **ADDITIVE OPTION NO. 6, BASE BID** PROVIDE ALL UNDERGROUND CONDUITS ASSOCIATED WITH PHOTOVOLTAIC SYSTEM INCLUDING BUT NOT LIMITED TO, HANDHOLES, CONDUIT STUB-UPS BETWEEN MAIN ELECTRICAL ROOM, PHOTOVOLTAIC DISTRIBUTION PANEL AND AC COMBINER BOXES. CAP, PROTECT AND MARK CONDUIT LOCATIONS WITH DETECTABLE UNDERGROUND TAPE FOR IMPLEMENTATION OF FULLY FUNCTIONING PHOTOVOLTAIC SYSTEM IN THE FUTURE. A PLAN INDICATING UNDERGROUND CONDUIT SIZE/QUANTITY/ROUTING FOR FUTURE PHOTOVOLTAIC WILL BE REQUIRED FOR REVIEW PRIOR TO BACKFILL. ALL UNDERGROUND CONDUITS WILL BE REQUIRED TO BE SHOWN IN AS-BUILT DOCUMENTATION.

B. **ADDITIVE OPTION NO. 6, OPTION** PROVIDE PARKING SHADE CANOPY MOUNTED PHOTOVOLTAIC PANELS, DC CONDUCTORS, INVERTERS, AC COMBINER BOXES, PHOTOVOLTAIC DISTRIBUTION PANELBOARDS, AND ALL OTHER REQUIRED PHOTOVOLTAIC HARDWARE AND ACCESSORIES FOR THE CONSTRUCTION OF A COMPLETE AND FUNCTIONING PHOTOVOLTAIC SYSTEM AS NOTED IN CONSTRUCTION DRAWINGS AND SPECIFICATIONS. NOTE, PARKING SHADE CANOPIES ARE NOT PART OF PHOTOVOLTAIC SYSTEM OPTION AND ARE PROVIDED BY OTHERS.

C. SEE DRAWING E0.1 FOR ABBREVIATIONS, SYMBOLS, GENERAL NOTES.

D. THE CONTRACTOR SHALL COORDINATE EXACT LOCATION OF EQUIPMENT POWER CONNECTIONS WITH EQUIPMENT INSTALLER PRIOR TO ROUGH-IN.

E. COORDINATE FINAL LOCATION OF MECHANICAL EQUIPMENT AND ASSOCIATED DISCONNECT SWITCHES, STARTERS, VFDS, CONTROL POWER AND OTHER POWER REQUIREMENTS WITH DIV 23 AND MECHANICAL DRAWINGS.

F. SEE MECHANICAL EQUIPMENT SCHEDULE FOR ASSOCIATED OVERCURRENT DEVICES, DISCONNECT SWITCHES, STARTERS AND WIRES.

G. VOLTAGE DROP SHALL BE LIMITED TO LESS THAN 3% FOR ALL BRANCH CIRCUITS AND 2% FOR ALL FEEDERS.

H. CONTRACTOR SHALL COORDINATE AND FIELD VERIFY REQUIREMENT OF NEUTRAL CONDUCTOR FOR ALL EQUIPMENT AND PROVIDE NEUTRAL CONDUCTOR AS NECESSARY.

I. ALL LIFE SAFETY AND LIGHTING PANELBOARDS SHALL BE EQUIPPED WITH TYPE 2 SPD.

J. ALL AUTOMATIC TRANSFER SWITCHES SHALL BE 4 POLE AND EQUIPPED WITH BYPASS ISOLATION.

K. ALL UTILITY TRANSFORMERS DESCRIBED AS NAVOPACHE TRANSFORMER TO BE COORDINATED WITH UTILITY AND PROVIDED BY UTILITY. COORDINATE ALL FINAL REQUIREMENTS AND AVAILABLE FAULT CURRENT CONTRIBUTIONS BASED ON SUPPLIED EQUIPMENT. BASIS OF DESIGN 2500KVA, AND 5%Z.

L. BASIS OF DESIGN ELECTRICAL EQUIPMENT MANUFACTURERS ARE SIEMENS, ASCO, AND CATERPILLAR. EQUIVALENT EQUIPMENT FROM APPROVED MANUFACTURERS IS ACCEPTABLE, PER DIV 26 SPECIFICATIONS.

SHEET KEYNOTES

E519	PV CIRCUIT BREAKER SHALL BE LOCATED AT LAST BUSSED SPACE. PROVIDE PERMANENT IDENTIFICATION PLAQUE INDICATING THE FOLLOWING: PV POWER SOURCE - DO NOT RELOCATE THIS CIRCUIT BREAKER
E530	PROVIDE SHUNT TRIP CIRCUIT BREAKER FOR INTERFACE WITH BOILER EMERGENCY SHUTDOWN EPO SWITCHES. REFER TO EMP2.2 G FOR ADDITIONAL INFORMATION.
E532	ELECTRICAL EQUIPMENT CONSTRUCTION = UL67 PANELBOARD IP20, TOUCH-SAFE, PLUG-IN MOLDED CASE CIRCUIT BREAKERS, ELECTRONIC TRIP UNIT
E535	ELECTRICAL EQUIPMENT CONSTRUCTION = UL67 PANELBOARD <= 600A IP20, TOUCH-SAFE, PLUG-IN MOLDED CASE CIRCUIT BREAKERS, ELECTRONIC TRIP UNIT > 600A FIXED MOUNT MOLDED CASE CIRCUIT BREAKERS, ELECTRONIC TRIP UNIT

FEEDER SCHEDULE

"X" DENOTES ALUMINUM CONDUCTORS, ALL OTHER CONDUCTORS SHALL BE COPPER

30-3	3#10 + 1#10 G, 3/4" C
50-2	2#6 + 1#10 G, 3/4" C
50-3	3#6 + 1#10 G, 3/4" C
225	4#4/0 + 1#4 G, 2 1/2" C
225-3	3#4/0 + 1#4 G, 2" C
250-3	3#250KCMIL + 1#4 G, 2 1/2" C
300-3	3#350KCMIL + 1#4 G, 3" C
400	2 SETS OF 4#3/0 + 1#3 G, (2) 2" C
800-3	3 SETS OF 3#300KCMIL + 1#1/0 G, (3) 3" C
A125	4#2/0 + 1#6 G, 2" C
A150	4#3/0 + 1#4 G, 2" C
A150V1	4#400KCMIL + 1#1/0 G, 2-1/2" C
A150V2	4#250KCMIL + 1#2 G, 2-1/2" C
A150V3	4#300KCMIL + 1#1 G, 2-1/2" C
A225	4#300KCMIL + 1#2 G, 2 1/2" C
A225V1	4#400KCMIL + 1#1/0 G, 2 1/2" C
A225V3	4#500KCMIL + 1#2/0 G, 3" C
A250V1	4#400KCMIL + 1#1 G, 2 1/2" C
A250V2	4#600KCMIL + 1#2/0 G, 3" C
A600	2 SETS OF 4#500KCMIL + 1#2/0 G, (2) 3" C
A1000	3 SETS OF 4#600KCMIL + 1#4/0 G, (3) 3 1/2" C
A1200	4 SETS OF 4#500KCMIL + 1#250KCMIL G, (4) 3" C
T30	30KVA TRANSFORMER, 480-208Y/120V, 3PH PRIMARY FEEDER: 3#6 + 1#10 G, 3/4" C SECONDARY FEEDER: 4#1 + 1#6 G, 1 1/2" C BONDING JUMPERS & GROUNDING ELECTRODE CONDUCTOR: #6
T45	45KVA TRANSFORMER, 480-208Y/120V, 3PH PRIMARY FEEDER: 3#3 + 1#8 G, 1 1/4" C SECONDARY FEEDER: 4#1/0 + 1#6 G, 2" C BONDING JUMPERS & GROUNDING ELECTRODE CONDUCTOR: #6
T75	75KVA TRANSFORMER, 480-208Y/120V, 3PH PRIMARY FEEDER: 3#1/0 + 1#6 G, 1 1/2" C SECONDARY FEEDER: 4#4/0 + 1#2 G, 2 1/2" C BONDING JUMPERS & GROUNDING ELECTRODE CONDUCTOR: #2
T75DV2	75KVA TRANSFORMER, 480-208Y/120V, 3PH PRIMARY FEEDER: 3#2/0 + 1#4 G, 1 1/2" C SECONDARY FEEDERS: 4#1/0 + 1#2 G, 2" C TO EACH PANEL BONDING JUMPERS & GROUNDING ELECTRODE CONDUCTOR: #2
T75DV3	75KVA TRANSFORMER, 480-208Y/120V, 3PH PRIMARY FEEDER: 3#4/0 + 1#3 G, 2" C SECONDARY FEEDERS: 4#1/0 + 1#2 G, 2" C TO EACH PANEL BONDING JUMPERS & GROUNDING ELECTRODE CONDUCTOR: #2

IHS Whiteriver Hospital

200 W Hospital Drive
Whiteriver, Arizona, 85941

IHS Project #: 131445
IHS Contract #: 75H70123R00008
IHS Award Date: 02/02/2024

BASED ON PROGRAM OF REQUIREMENTS DATED [**03/26/22**], POR AMENDMENT DATED [**02/03/25**], AND ON SCHEMATIC DRAWINGS APPROVED [**11/19/24**].

SMITHGROUP

455 NORTH THIRD STREET
SUITE 250
PHOENIX, AZ 85004
602.265.2200
smithgroup.com

ISSUED FOR	DATE
BID ADDENDUM-G	12JUN26
BID ADDENDUM-E	28MAY26
BID ADDENDUM-A	16APR26
FINAL CONSTRUCTION DOCUMENTS	05MAR26

SEALS AND SIGNATURES

Registered Professional Engineer CERTIFICATE NO. 54673 DANIEL L. PETERSON State of ARIZONA U.S.A.
EXPIRES: 6-30-28

ELECTRICAL ONE LINE DIAGRAM - SES-D, 2 OF 2

Drawn By: Whittington Checked By: Baca
14904.000

PROJECT NUMBER

CD **E5.4.2**

SHEET NUMBER

Plot Date: 6/12/2026 1:13:08 PM Whittington

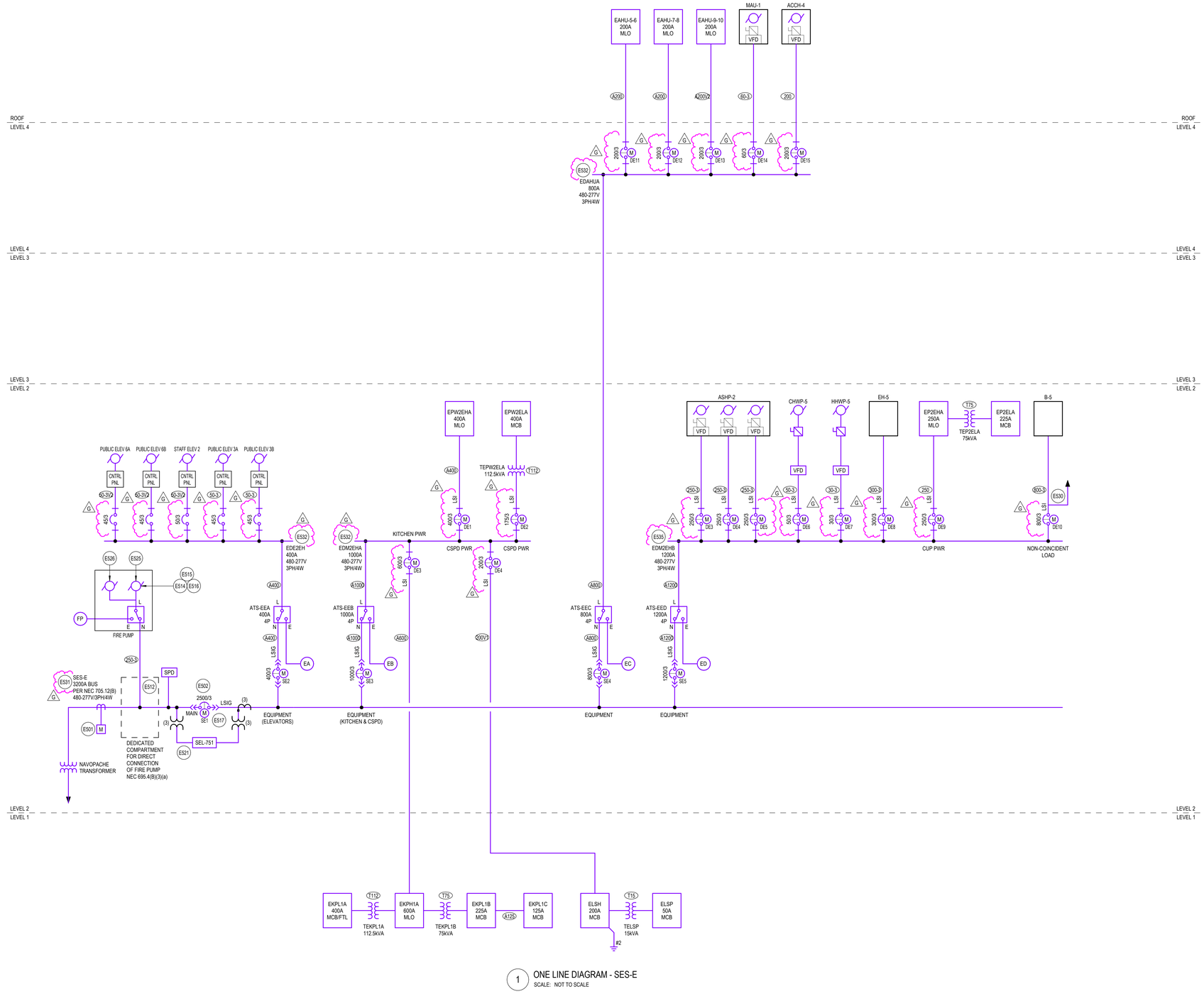

1 ONE LINE DIAGRAM - SES-E
SCALE: NOT TO SCALE

GENERAL SHEET NOTES

A. **ADDITIVE OPTION NO. 6, BASE BID** PROVIDE ALL UNDERGROUND CONDUITS ASSOCIATED WITH PHOTOVOLTAIC SYSTEM INCLUDING BUT NOT LIMITED TO, HANDHOLES, CONDUIT STUB-UPS BETWEEN MAIN ELECTRICAL ROOM, PHOTOVOLTAIC DISTRIBUTION PANEL AND AC COMBINER BOXES. CAP, PROTECT AND MARK CONDUIT LOCATIONS WITH DETECTABLE UNDERGROUND TAPE FOR IMPLEMENTATION OF FULLY FUNCTIONING PHOTOVOLTAIC SYSTEM IN THE FUTURE. A PLAN INDICATING UNDERGROUND CONDUIT SIZE/QUANTITY/ROUTING FOR FUTURE PHOTOVOLTAIC WILL BE REQUIRED FOR REVIEW PRIOR TO BACKFILL. ALL UNDERGROUND CONDUITS WILL BE REQUIRED TO BE SHOWN IN AS-BUILT DOCUMENTATION.

B. **ADDITIVE OPTION NO. 6, OPTION** PROVIDE PARKING SHADE CANOPY MOUNTED PHOTOVOLTAIC PANELS, DC CONDUCTORS, INVERTERS, AC COMBINER BOXES, PHOTOVOLTAIC DISTRIBUTION PANELBOARDS, AND ALL OTHER REQUIRED PHOTOVOLTAIC HARDWARE AND ACCESSORIES FOR THE CONSTRUCTION OF A COMPLETE AND FUNCTIONING PHOTOVOLTAIC SYSTEM AS NOTED IN CONSTRUCTION DRAWINGS AND SPECIFICATIONS. NOTE, PARKING SHADE CANOPIES ARE NOT PART OF PHOTOVOLTAIC SYSTEM OPTION AND ARE PROVIDED BY OTHERS.

C. SEE DRAWING E0.1 FOR ABBREVIATIONS, SYMBOLS, GENERAL NOTES. G

D. THE CONTRACTOR SHALL COORDINATE EXACT LOCATION OF EQUIPMENT POWER CONNECTIONS WITH EQUIPMENT INSTALLER PRIOR TO ROUGH-IN.

E. COORDINATE FINAL LOCATION OF MECHANICAL EQUIPMENT AND ASSOCIATED DISCONNECT SWITCHES, STARTERS, VFDS, CONTROL POWER AND OTHER POWER REQUIREMENTS WITH DIV 23 AND MECHANICAL DRAWINGS.

F. SEE MECHANICAL EQUIPMENT SCHEDULE FOR ASSOCIATED OVERCURRENT DEVICES, DISCONNECT SWITCHES, STARTERS AND WIRES.

G. VOLTAGE DROP SHALL BE LIMITED TO LESS THAN 3% FOR ALL BRANCH CIRCUITS AND 2% FOR ALL FEEDERS.

H. CONTRACTOR SHALL COORDINATE AND FIELD VERIFY REQUIREMENT OF NEUTRAL CONDUCTOR FOR ALL EQUIPMENT AND PROVIDE NEUTRAL CONDUCTOR AS NECESSARY.

I. ALL LIFE SAFETY AND LIGHTING PANELBOARDS SHALL BE EQUIPPED WITH TYPE 2 SPD.

J. ALL AUTOMATIC TRANSFER SWITCHES SHALL BE 4 POLE AND EQUIPPED WITH BYPASS ISOLATION.

K. ALL UTILITY TRANSFORMERS DESCRIBED AS NAVOPACHE TRANSFORMER TO BE COORDINATED WITH UTILITY AND PROVIDED BY UTILITY. COORDINATE ALL FINAL REQUIREMENTS AND AVAILABLE FAULT CURRENT CONTRIBUTIONS BASED ON SUPPLIED EQUIPMENT. BASIS OF DESIGN 2500KVA, AND 5%Z.

L. BASIS OF DESIGN ELECTRICAL EQUIPMENT MANUFACTURERS ARE SIEMENS, ASCO, AND CATERPILLAR. EQUIVALENT EQUIPMENT FROM APPROVED MANUFACTURERS IS ACCEPTABLE, PER DIV 26 SPECIFICATIONS.

G

SHEET KEYNOTES

E501 NAVOPACHE UTILITY METER. METER SHALL BE EQUIPPED WITH CAPABILITY TO INTERFACE WITH BMS. ELECTRICAL CONTRACTOR SHALL PROVIDE REQUIRED CONDUIT AND COMMUNICATION WIRING FROM METER TO POINT OF INTERFACE WITH BMS.

E502 COMPLIANCE WITH "NEC 240.87 ARC ENERGY REDUCTION" REQUIRED. REDUCTION METHOD SHALL ALLOW FOR REQUIRED SELECTIVE DEVICE COORDINATION AND ARC FLASH REQUIREMENTS. REFER TO ELECTRICAL SPECIFICATIONS FOR ADDITIONAL INFORMATION.

E512 DIRECT CONNECTION OF FIRE PUMP AS ALLOWED BY NEC 695.3(A)(1) AND IN COMPLIANCE WITH NEC 695.4(A).

E514 FIRE PUMP CONTROLLER SHALL BE MONITORED BY THE FIRE ALARM SYSTEM. LOSS OF NORMAL POWER SHALL ACTIVATE SUPERVISORY ALARM AS FACP.

E515 PROVIDE CONTROL WIRING IN COMPLIANCE WITH NEC 695.14. BMS MONITORING SHALL BE PROVIDED.

E516 LISTED SINGLE POINT NORMAL & EMERGENCY CONNECTION (WITH INTEGRAL AUTOMATIC TRANSFER SWITCH). INTERNAL WIRING FROM CONTROLLER(S) TO PUMP MOTOR(S) SHALL BE RUN IN CONDUIT TYPE AS SPECIFIED BY NEC 695.6(D) & (F). ALL INTERNAL WIRING SHALL BE PROVIDED BY EQUIPMENT MANUFACTURER. ALL REQUIRED MARKINGS & APPROPRIATE PLAQUES SHALL BE PROVIDED IN COMPLIANCE WITH THE NEC.

E517 PROVIDE PERMANENT IDENTIFICATION PLAQUE INDICATING THE FOLLOWING: ELECTRICAL SERVICE #5 OF 5. GENERATORS LOCATED IN ELECTRICAL EQUIPMENT YARD, GENERATOR DISCONNECTS LOCATED IN ADJACENT ELECTRICAL ROOM IN GMDB. PV DISCONNECT LOCATED AT END OF THIS ELECTRICAL EQUIPMENT LINEUP.

E521 PROVIDE RELAY PROTECTION ELEMENTS REQUIRED BY UTILITY AND MULTIPLE GENERATOR AND PV MONITORING AND CONTROL SYSTEM MANUFACTURER. INTEGRATE SEL RELAY AND PROGRAMMING INTO MULTIPLE GENERATOR AND PV MONITORING SYSTEM AND CIRCUIT BREAKER. PROVIDE AND PROGRAM PROTECTION ELEMENT SET POINTS AND LOGIC WITHIN THE RELAY. REFER TO SEL-751 DETAIL FOR ADDITIONAL INFORMATION.

E525 ELECTRIC FIRE PUMP BY FIRE SUPPRESSION DELEGATED DESIGN. PROVIDED WITH ATS INTEGRAL TO PUMP CONTROLLER WITH INTEGRAL DISCONNECT. PROVIDE CONNECTION AS SHOWN FOR UP TO 150HP 480V/3-PHASE ELECTRIC PUMP.

E526 ELECTRIC FIRE BOOSTER JOCKEY PUMP BY FIRE SUPPRESSION DELEGATED DESIGN. PROVIDED WITH PUMP CONTROLLER WITH INTEGRAL DISCONNECT. PROVIDE CONNECTION AS SHOWN FOR UP TO 1.5HP 480V/3-PHASE ELECTRIC PUMP. TAP SHALL ORIGINATE WITHIN FIRE PUMP ROOM AND BE LESS THAN 10FT CABLE LENGTH TO CONTROLLER PER TAP RULES.

E530 PROVIDE SHUNT TRIP CIRCUIT BREAKER FOR INTERFACE WITH BOILER EMERGENCY SHUTDOWN EPO SWITCHES. REFER TO EMP2.2.G FOR ADDITIONAL INFORMATION.

E531 ELECTRICAL EQUIPMENT CONSTRUCTION = UL891 REAR CONNECTED SWITCHBOARD DRAW-OUT LOW VOLTAGE POWER CIRCUIT BREAKERS

E532 ELECTRICAL EQUIPMENT CONSTRUCTION = UL67 PANELBOARD IP20, TOUCH-SAFE, PLUG-IN MOLDED CASE CIRCUIT BREAKERS, ELECTRONIC TRIP UNIT

E535 ELECTRICAL EQUIPMENT CONSTRUCTION = UL67 PANELBOARD <= 600A IP20, TOUCH-SAFE, PLUG-IN MOLDED CASE CIRCUIT BREAKERS, ELECTRONIC TRIP UNIT > 600A FIXED MOUNT MOLDED CASE CIRCUIT BREAKERS, ELECTRONIC TRIP UNIT

G

(X) FEEDER SCHEDULE

"X" DENOTES ALUMINUM CONDUCTORS, ALL OTHER CONDUCTORS SHALL BE COPPER

30-3	3#10 + 1#10 G, 3/4" C
50-3	3#6 + 1#10 G, 3/4" C
50-3V2	3#4 + 1#6 G, 1" C
60-3	3#4 + 1#10 G, 1 1/4" C
200	4#3/0 + 1#6 G, 2" C
200V1	2 SETS OF 4#300KCMIL + 1#10 G, (2) 3" C
250	4#250KCMIL + 1#4 G, 3"C
250-3	3#250KCMIL + 1#4 G, 2 1/2" C
300-3	3#350KCMIL + 1#4 G, 3" C
800-3	3 SETS OF 3#300KCMIL + 1#10 G, (3) 3" C
A125	4#2/0 + 1#6 G, 2" C
A200	4#250KCMIL + 1#4 G, 2 1/2" C
A200V2	4#300KCMIL + 1#3 G, 2 1/2" C
A400	2 SETS OF 4#250KCMIL + 1#1 G, (2) 2 1/2" C
A600	2 SETS OF 4#500KCMIL + 1#2/0 G, (2) 3" C
A800	3 SETS OF 4#400KCMIL + 1#3/0 G, (3) 3" C
A1000	3 SETS OF 4#600KCMIL + 1#4/0 G, (3) 3 1/2" C
A1200	4 SETS OF 4#500KCMIL + 1#250KCMIL G, (4) 3" C
T15	15KVA TRANSFORMER, 480-208Y/120V, 3PH PRIMARY FEEDER: 3#10 + 1#10 G, 3/4" C SECONDARY FEEDER: 4#4 + 1#6 G, 1 1/4" C BONDING JUMPERS & GROUNDING ELECTRODE CONDUCTOR: #8
T75	75KVA TRANSFORMER, 480-208Y/120V, 3PH PRIMARY FEEDER: 3#1/0 + 1#6 G, 1 1/2" C SECONDARY FEEDER: 4#4/0 + 1#2 G, 2 1/2" C BONDING JUMPERS & GROUNDING ELECTRODE CONDUCTOR: #2
T112	112.5KVA TRANSFORMER, 480-208Y/120V, 3PH PRIMARY FEEDER: 3#3/0 + 1#6 G, 2" C SECONDARY FEEDER: 2 SETS OF 4#3/0 + 1#2 G, (2) 2" C BONDING JUMPERS & GROUNDING ELECTRODE CONDUCTOR: #2

IHS Whiteriver Hospital

200 W Hospital Drive
Whiteriver, Arizona, 85941

IHS Project #: 131445
IHS Contract #: 75H70123R00008
IHS Award Date: 02/02/2024

BASED ON PROGRAM OF REQUIREMENTS DATED [**03/26/22**], POR AMENDMENT DATED [**02/03/25**], AND ON SCHEMATIC DRAWINGS APPROVED [**11/19/24**].

SMITHGROUP

455 NORTH THIRD STREET
SUITE 250
PHOENIX, AZ 85004
602.265.2200
smithgroup.com

ISSUED FOR	DATE
BID ADDENDUM-G	12JUN26
BID ADDENDUM-E	28MAY26
BID ADDENDUM-B	30APR26
BID ADDENDUM-A	16APR26
FINAL CONSTRUCTION DOCUMENTS	05MAR26

SEALS AND SIGNATURES

Registered Professional Engineer — CERTIFICATE NO. 54673 — DANIEL L. PETERSON — 12-29-26 — ARIZONA, U.S.A.

EXPIRES: 6-30-28

ELECTRICAL ONE LINE DIAGRAM - SES-E

Drawn By: Whittington Checked By: Baca

14904.000

PROJECT NUMBER

CD **E5.5.1**

SHEET NUMBER

Plot Date: 6/12/2026 1:13:13 PM Whittington

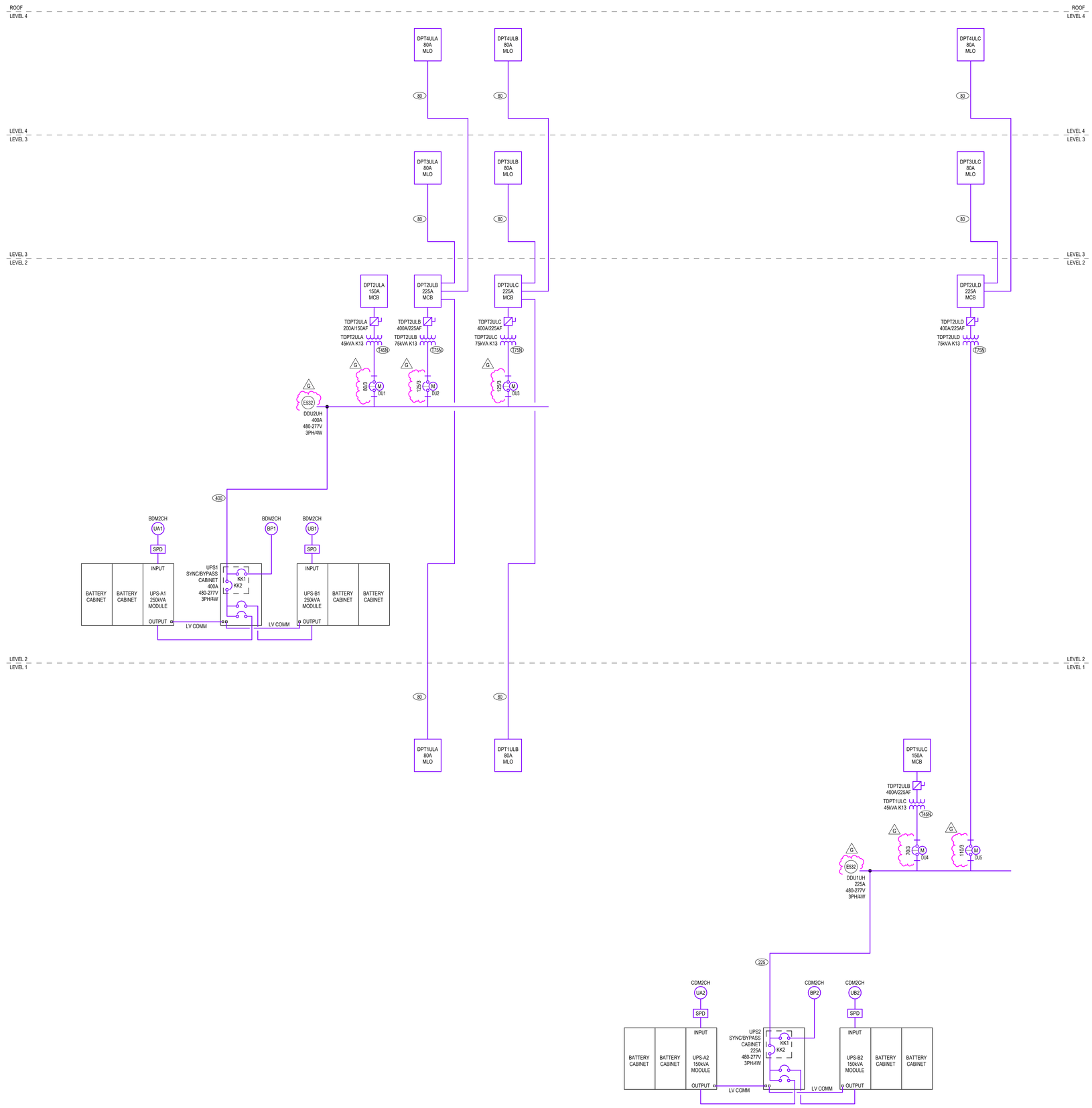

1 ONE LINE DIAGRAM - UPS
SCALE: NOT TO SCALE

GENERAL SHEET NOTES

A. **ADDITIVE OPTION NO. 6, BASE BID** PROVIDE ALL UNDERGROUND CONDUITS ASSOCIATED WITH PHOTOVOLTAIC SYSTEM INCLUDING BUT NOT LIMITED TO, HANDHOLES, CONDUIT STUB-UPS BETWEEN MAIN ELECTRICAL ROOM, PHOTOVOLTAIC DISTRIBUTION PANEL AND AC COMBINER BOXES. CAP, PROTECT AND MARK CONDUIT LOCATIONS WITH DETECTABLE UNDERGROUND TAPE FOR IMPLEMENTATION OF FULLY FUNCTIONING PHOTOVOLTAIC SYSTEM IN THE FUTURE. A PLAN INDICATING UNDERGROUND CONDUIT SIZE/QUANTITY/ROUTING FOR FUTURE PHOTOVOLTAIC WILL BE REQUIRED FOR REVIEW PRIOR TO BACKFILL. ALL UNDERGROUND CONDUITS WILL BE REQUIRED TO BE SHOWN IN AS-BUILT DOCUMENTATION.
B. **ADDITIVE OPTION NO. 6, OPTION** PROVIDE PARKING SHADE CANOPY MOUNTED PHOTOVOLTAIC PANELS, DC CONDUCTORS, INVERTERS, AC COMBINER BOXES, PHOTOVOLTAIC DISTRIBUTION PANELBOARDS, AND ALL OTHER REQUIRED PHOTOVOLTAIC HARDWARE AND ACCESSORIES FOR THE CONSTRUCTION OF A COMPLETE AND FUNCTIONING PHOTOVOLTAIC SYSTEM AS NOTED IN CONSTRUCTION DRAWINGS AND SPECIFICATIONS. NOTE, PARKING SHADE CANOPIES ARE NOT PART OF PHOTOVOLTAIC SYSTEM OPTION AND ARE PROVIDED BY OTHERS.
C. SEE DRAWING E0.1 FOR ABBREVIATIONS, SYMBOLS, GENERAL NOTES.
D. THE CONTRACTOR SHALL COORDINATE EXACT LOCATION OF EQUIPMENT POWER CONNECTIONS WITH EQUIPMENT INSTALLER PRIOR TO ROUGH-IN.
E. COORDINATE FINAL LOCATION OF MECHANICAL EQUIPMENT AND ASSOCIATED DISCONNECT SWITCHES, STARTERS, VFDS, CONTROL POWER AND OTHER POWER REQUIREMENTS WITH DIV 23 AND MECHANICAL DRAWINGS.
F. SEE MECHANICAL EQUIPMENT SCHEDULE FOR ASSOCIATED OVERCURRENT DEVICES, DISCONNECT SWITCHES, STARTERS AND WIRES.
G. VOLTAGE DROP SHALL BE LIMITED TO LESS THAN 3% FOR ALL BRANCH CIRCUITS AND 2% FOR ALL FEEDERS.
H. CONTRACTOR SHALL COORDINATE AND FIELD VERIFY REQUIREMENT OF NEUTRAL CONDUCTOR FOR ALL EQUIPMENT AND PROVIDE NEUTRAL CONDUCTOR AS NECESSARY.
I. ALL LIFE SAFETY AND LIGHTING PANELBOARDS SHALL BE EQUIPPED WITH TYPE 2 SPD.
J. ALL AUTOMATIC TRANSFER SWITCHES SHALL BE 4 POLE AND EQUIPPED WITH BYPASS ISOLATION.
K. ALL UTILITY TRANSFORMERS DESCRIBED AS NAVOPACHE TRANSFORMER TO BE COORDINATED WITH UTILITY AND PROVIDED BY UTILITY. COORDINATE ALL FINAL REQUIREMENTS AND AVAILABLE FAULT CURRENT CONTRIBUTIONS BASED ON SUPPLIED EQUIPMENT. BASIS OF DESIGN 2500KVA, AND 5%Z.
L. BASIS OF DESIGN ELECTRICAL EQUIPMENT MANUFACTURERS ARE SIEMENS, ASCO, AND CATERPILLAR. EQUIVALENT EQUIPMENT FROM APPROVED MANUFACTURERS IS ACCEPTABLE, PER DIV 26 SPECIFICATIONS.

SHEET KEYNOTES

E532 ELECTRICAL EQUIPMENT CONSTRUCTION = UL67 PANELBOARD
G IP20, TOUCH-SAFE, PLUG-IN MOLDED CASE CIRCUIT BREAKERS, ELECTRONIC TRIP UNIT

FEEDER SCHEDULE

80	4#3 + 1#8 G, 1 1/4" C
225	4#4/0 + 1#4 G, 2 1/2" C
400	2 SETS OF 4#530 + 1#3 G, (2) 2" C
T45N	45KVA TRANSFORMER, 480-208Y/120V, 3PH PRIMARY FEEDER: 3#3 + 1#8 G, 1 1/4" C SECONDARY FEEDER: 3#1/0, 1#4/0 N + 1#6 G, 2" C BONDING JUMPERS & GROUNDING ELECTRODE CONDUCTOR: #6
T75N	75KVA TRANSFORMER, 480-208Y/120V, 3PH PRIMARY FEEDER: 3#1/0 + 1#6 G, 1 1/2" C SECONDARY FEEDER: 3#4/0, 1#500KCMIL N + 1#2 G, 2 1/2" C BONDING JUMPERS & GROUNDING ELECTRODE CONDUCTOR: #2

IHS Whiteriver Hospital

200 W Hospital Drive
Whiteriver, Arizona, 85941

IHS Project #: 131445
IHS Contract #: 75H70123R00008
IHS Award Date: 02/02/2024

BASED ON PROGRAM OF REQUIREMENTS DATED [**03/26/22**], POR AMENDMENT DATED [**02/03/25**], AND ON SCHEMATIC DRAWINGS APPROVED [**11/19/24**].

SMITHGROUP

455 NORTH THIRD STREET
SUITE 250
PHOENIX, AZ 85004
602.265.2200
smithgroup.com

ISSUED FOR	DATE
BID ADDENDUM-G	12JUN26
BID ADDENDUM-E	28MAY26
BID ADDENDUM-A	16APR26
FINAL CONSTRUCTION DOCUMENTS	05MAR26

SEALS AND SIGNATURES

Registered Professional Engineer (Electrical) CERTIFICATE NO. 54673 DANIEL L. PETERSON Date Signed 06-22-26 ARIZONA U.S.A.
EXPIRES: 6-30-28

ELECTRICAL ONE LINE DIAGRAM - UPS

Drawn By: Whittington Checked By: Baca
14904.000
PROJECT NUMBER

CD **E5.6**
SHEET NUMBER

Plot Date: 6/12/2026 1:13:17 PM Whittington

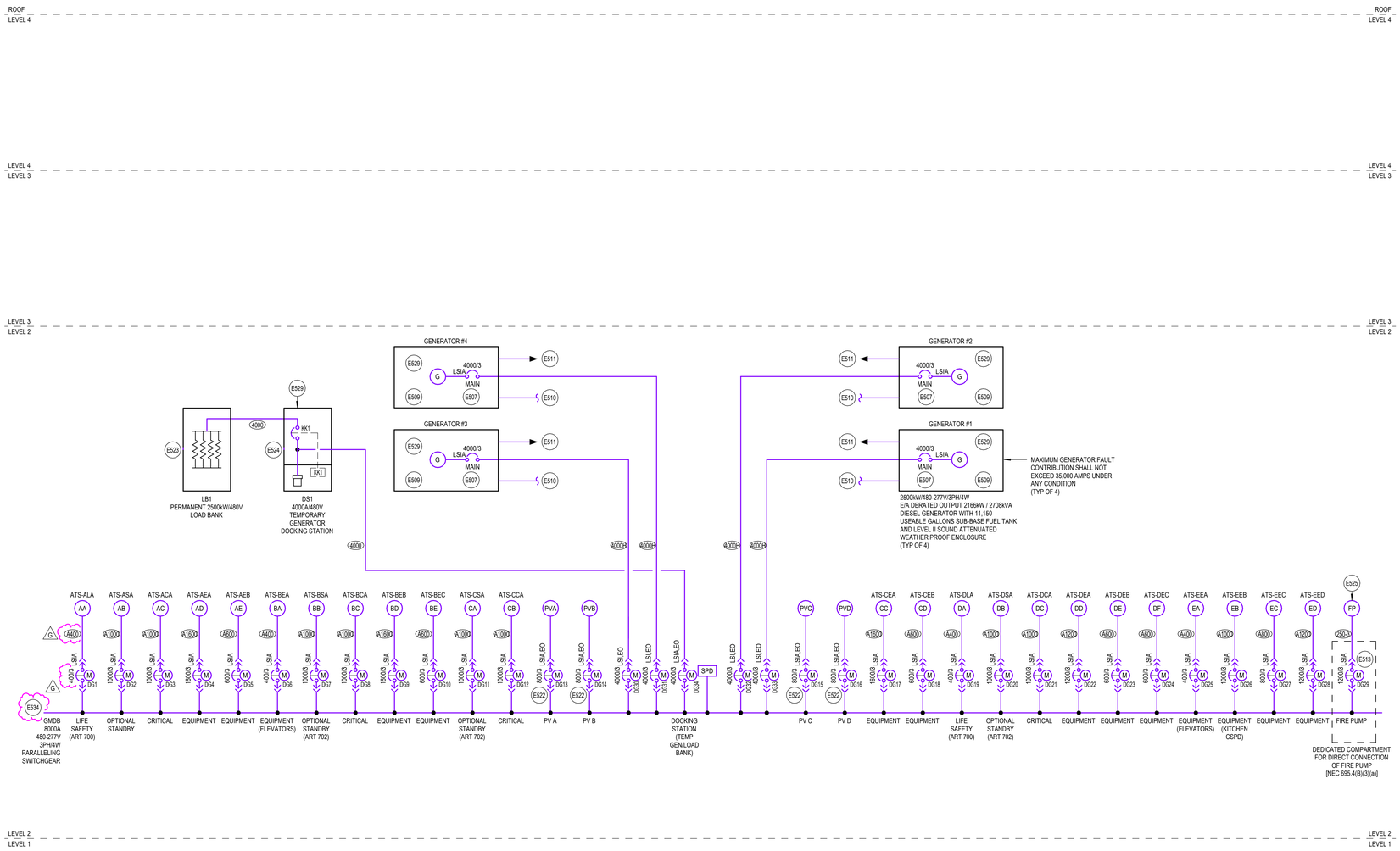

1 ONE LINE DIAGRAM - GENERATOR
SCALE: NOT TO SCALE

GENERAL SHEET NOTES

A. **ADDITIVE OPTION NO. 6, BASE BID** PROVIDE ALL UNDERGROUND CONDUITS ASSOCIATED WITH PHOTOVOLTAIC SYSTEM INCLUDING BUT NOT LIMITED TO, HANDHOLES, CONDUIT STUB-UPS BETWEEN MAIN ELECTRICAL ROOM, PHOTOVOLTAIC DISTRIBUTION PANEL AND AC COMBINER BOXES. CAP, PROTECT AND MARK CONDUIT LOCATIONS WITH DETECTABLE UNDERGROUND TAPE FOR IMPLEMENTATION OF FULLY FUNCTIONING PHOTOVOLTAIC SYSTEM IN THE FUTURE. A PLAN INDICATING UNDERGROUND CONDUIT SIZE/QUANTITY/ROUTING FOR FUTURE PHOTOVOLTAIC WILL BE REQUIRED FOR REVIEW PRIOR TO BACKFILL. ALL UNDERGROUND CONDUITS WILL BE REQUIRED TO BE SHOWN IN AS-BUILT DOCUMENTATION.

B. **ADDITIVE OPTION NO. 6, OPTION** PROVIDE PARKING SHADE CANOPY MOUNTED PHOTOVOLTAIC PANELS, DC CONDUCTORS, INVERTERS, AC COMBINER BOXES, PHOTOVOLTAIC DISTRIBUTION PANELBOARDS, AND ALL OTHER REQUIRED PHOTOVOLTAIC HARDWARE AND ACCESSORIES FOR THE CONSTRUCTION OF A COMPLETE AND FUNCTIONING PHOTOVOLTAIC SYSTEM AS NOTED IN CONSTRUCTION DRAWINGS AND SPECIFICATIONS. NOTE, PARKING SHADE CANOPIES ARE NOT PART OF PHOTOVOLTAIC SYSTEM OPTION AND ARE PROVIDED BY OTHERS.

C. SEE DRAWING E0.1 FOR ABBREVIATIONS, SYMBOLS, GENERAL NOTES. (G)

D. THE CONTRACTOR SHALL COORDINATE EXACT LOCATION OF EQUIPMENT POWER CONNECTIONS WITH EQUIPMENT INSTALLER PRIOR TO ROUGH-IN.

E. COORDINATE FINAL LOCATION OF MECHANICAL EQUIPMENT AND ASSOCIATED DISCONNECT SWITCHES, STARTERS, VFDS, CONTROL POWER AND OTHER POWER REQUIREMENTS WITH DIV 23 AND MECHANICAL DRAWINGS.

F. SEE MECHANICAL EQUIPMENT SCHEDULE FOR ASSOCIATED OVERCURRENT DEVICES, DISCONNECT SWITCHES, STARTERS AND WIRES.

G. VOLTAGE DROP SHALL BE LIMITED TO LESS THAN 3% FOR ALL BRANCH CIRCUITS AND 2% FOR ALL FEEDERS.

H. CONTRACTOR SHALL COORDINATE AND FIELD VERIFY REQUIREMENT OF NEUTRAL CONDUCTOR FOR ALL EQUIPMENT AND PROVIDE NEUTRAL CONDUCTOR AS NECESSARY.

I. ALL LIFE SAFETY AND LIGHTING PANELBOARDS SHALL BE EQUIPPED WITH TYPE 2 SPD.

J. ALL AUTOMATIC TRANSFER SWITCHES SHALL BE 4 POLE AND EQUIPPED WITH BYPASS ISOLATION.

K. ALL UTILITY TRANSFORMERS DESCRIBED AS NAVOPACHE TRANSFORMER TO BE COORDINATED WITH UTILITY AND PROVIDED BY UTILITY. COORDINATE ALL FINAL REQUIREMENTS AND AVAILABLE FAULT CURRENT CONTRIBUTIONS BASED ON SUPPLIED EQUIPMENT. BASIS OF DESIGN 2500KVA, AND 5%Z.

L. BASIS OF DESIGN ELECTRICAL EQUIPMENT MANUFACTURERS ARE SIEMENS, ASCO, AND CATERPILLAR. EQUIVALENT EQUIPMENT FROM APPROVED MANUFACTURERS IS ACCEPTABLE, PER DIV 26 SPECIFICATIONS. (G)

SHEET KEYNOTES

E507 GROUND FAULT DETECTION SHALL INITIATE A GROUND FAULT ALARM AT THE GENERATOR ANNUNCIATOR PANEL ONLY. CIRCUIT BREAKER SHALL NOT TRIP UPON GROUND FAULT DETECTION. CIRCUIT BREAKER SHALL BE PROVIDED BY ELECTRICAL GEAR MANUFACTURER AND SHALL BE INCLUDED IN SELECTIVE COORDINATION STUDY.

E509 GENERATOR AND FUEL TANK SHALL COMPLY WITH ALL APPLICABLE PROVISIONS OF IFC CHAPTERS 6 BUILDING SERVICES AND SYSTEMS, 50 HAZARDOUS MATERIAL GENERAL PROVISIONS, AND 57 FLAMMABLE AND COMBUSTIBLE LIQUIDS, AS WELL AS NFPA 30 FLAMMABLE AND COMBUSTIBLE LIQUIDS CODE AND ARTICLES 445 AND 700 OF THE 2023 NEC.

E510 PROVIDE (3) 1-1/4" CONDUITS FOR COMMUNICATION CABLING BETWEEN GENERATOR, ATS', ANNUNCIATOR PANELS AND BMS. COORDINATE POINT OF TERMINATION WITH FLOOR PLANS.

E511 PROVIDE (1) 2" CONDUIT FOR GENERATOR ACCESSORY PANEL FEEDER. REFER TO FLOOR PLANS FOR ADDITIONAL INFORMATION.

E513 FIRE PUMP DISCONNECT (GENERATOR) AS ALLOWED BY NEC 695.4(B)(1)(C) AND SELECTED IN COMPLIANCE WITH NEC 695.4(B)(2)(B). TRIP RATING PROVIDED TO PROVIDE PICK-UP OF FULL PUMP LOAD. FINAL FRAME TYPE/SETTINGS SHALL BE SELECTED TO PROVIDE FULLY COORDINATED SYSTEM. BREAKER SHALL BE PROVIDED WITH PERMANENT MEANS OF LOCK-OUT IN THE CLOSED POSITION IN COMPLIANCE WITH NEC 695.4(B)(3)(B) & (E). PROVIDE MARKING AS REQUIRED BY 695.4(B)(3)(C) & (D). GROUND FAULT (GF) DETECTION/ALARM WILL BE ALLOWED. GF PROTECTION SHALL NOT BE PERMITTED PER NEC 695.6(G).

E522 SEL 751 RELAY WITH CTS FOR 32R CONFIGURATION TO RESTRICT BACKFEEDING SES DURING MICROGRID OPERATION. NETWORK RELAY TO MULTIPLE GENERATOR AND PV PARALLELING MICROGRID MONITORING AND CONTROL SYSTEM.

E523 2500KW/480V PERMANENT LOAD BANK, TRYSTAR #LS2500, OR EQUIVALENT. LOAD BANK SHALL BE EQUIPPED WITH EXHAUST HOOD AND AUTOMATIC LOAD LEVEL CONTROL ALLOWING FOR AUTOMATIC LOAD REGULATION.

E524 4000A/480V SINGLE BREAKER DOCKING STATION WITH KIRK KEY INTERLOCK, TRYSTAR #SBDS-4, OR EQUIVALENT.

E525 ELECTRIC FIRE PUMP BY FIRE SUPPRESSION DELEGATED DESIGN. PROVIDED WITH ATS INTEGRAL TO PUMP CONTROLLER WITH INTEGRAL DISCONNECT. PROVIDE CONNECTION AS SHOWN FOR UP TO 150HP 480V/3-PHASE ELECTRIC PUMP.

E529 REFER TO GROUNDING RISER FOR GROUNDING PROVISIONS.

E534 ELECTRICAL EQUIPMENT CONSTRUCTION = UL1558 LOW VOLTAGE SWITCH GEAR DRAW-OUT LOW VOLTAGE POWER CIRCUIT BREAKERS (G)

FEEDER SCHEDULE

"A" DENOTES ALUMINUM CONDUCTORS, ALL OTHER CONDUCTORS SHALL BE COPPER

250-3	3#250KCMIL + 1#4 G, 2 1/2" C
4000	11 SETS OF 4#500KCMIL + 1#500KCMIL G, (11) 4" C
4000H	11 SETS OF 4#750KCMIL + 1#750KCMIL G, (11) 4" C. FEEDER UPSIZED DUE TO HEATING CALCULATIONS. REFER TO UNDERGROUND ROUTING SITE PLAN AND DUCTBANK DETAILS.
A400	2 SETS OF 4#250KCMIL + 1#1 G, (2) 2 1/2" C
A600	2 SETS OF 4#500KCMIL + 1#2/0 G, (2) 3" C
A800	3 SETS OF 4#400KCMIL + 1#3/0 G, (3) 3" C
A1000	3 SETS OF 4#600KCMIL + 1#4/0 G, (3) 3 1/2" C
A1200	4 SETS OF 4#500KCMIL + 1#250KCMIL G, (4) 3" C
A1600	5 SETS OF 4#600KCMIL + 1#350KCMIL G, (5) 3 1/2" C

IHS Whiteriver Hospital

200 W Hospital Drive
Whiteriver, Arizona, 85941

IHS Project #: 131445
IHS Contract #: 75H70123R00008
IHS Award Date: 02/02/2024

BASED ON PROGRAM OF REQUIREMENTS DATED [**03/26/22**], POR AMENDMENT DATED [**02/03/25**], AND ON SCHEMATIC DRAWINGS APPROVED [**11/19/24**].

SMITHGROUP

455 NORTH THIRD STREET
SUITE 250
PHOENIX, AZ 85004
602.265.2200
smithgroup.com

ISSUED FOR	DATE
BID ADDENDUM-G	12JUN26
BID ADDENDUM-E	28MAY26
BID ADDENDUM-A	16APR26
FINAL CONSTRUCTION DOCUMENTS	23JAN26

SEALS AND SIGNATURES

Registered Professional Engineer (Electrical) CERTIFICATE NO. 54673 DANIEL L. PETERSON Date Signed 06-12-26 ARIZONA U.S.A.

EXPIRES: 6-30-28

ELECTRICAL ONE LINE DIAGRAM - GENERATOR

Drawn By: Whittington Checked By: Baca

14904.000
PROJECT NUMBER

CD **E5.7**
SHEET NUMBER

Plot Date: 6/12/2026 1:13:22 PM Whittington

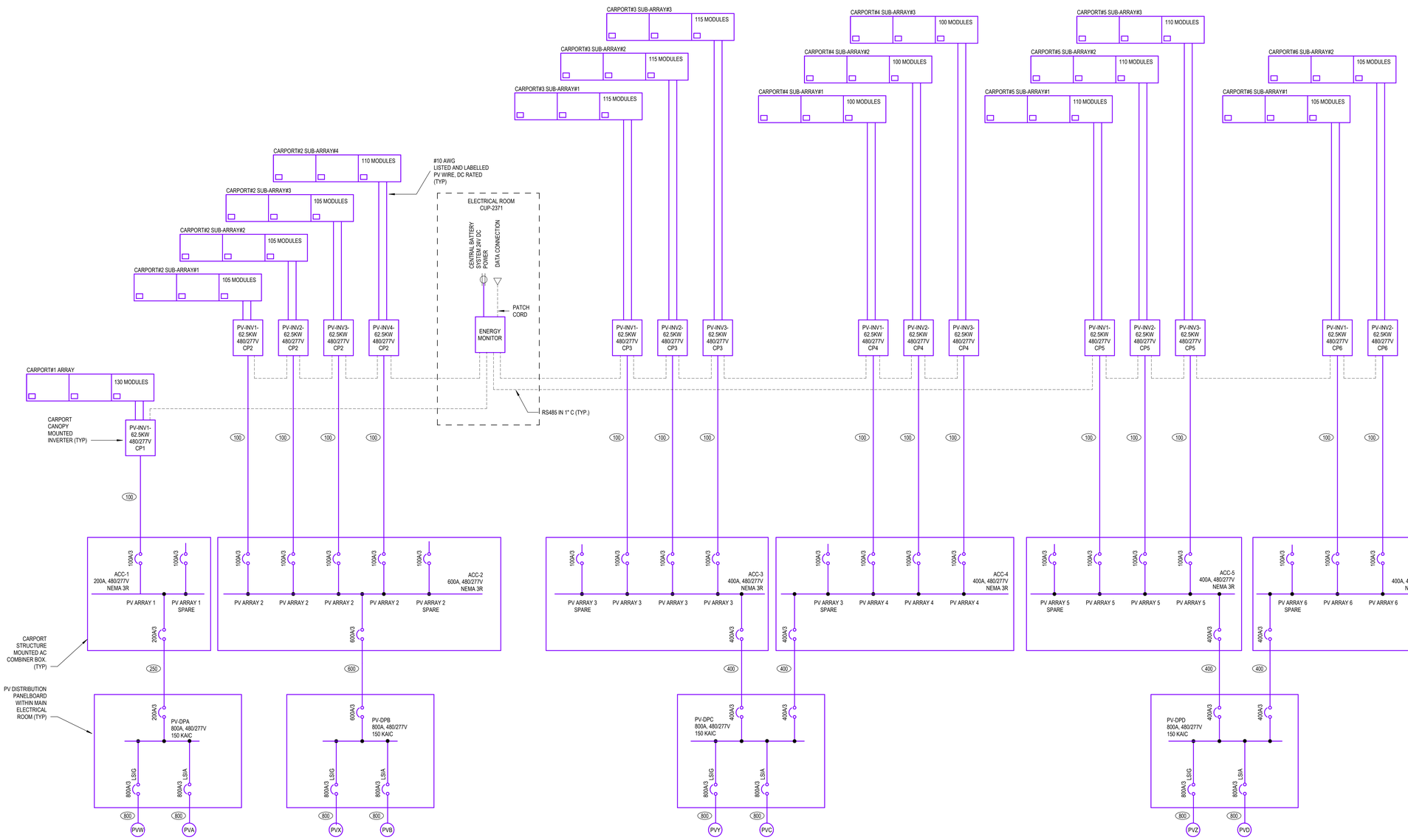

PV SYSTEM SUMMARY			
CARPORT#	QUANTITY OF MODULES	MODULE RATING (W)	ARRAY DC KW RATING
1	130	590	77
2	425	590	251
3	345	590	204
4	300	590	177
5	330	590	195
6	210	590	124
TOTAL DC NAMEPLATE RATING (MW)			1.03
TOTAL AC NAMEPLATE RATING (MW)			1.00
DC/AC RATIO			1.03

NOTES:
1. THE PHOTOVOLTAIC SYSTEM DESIGN IS IN ACCORDANCE WITH THE NEC. THE PV SYSTEM SHALL CONFORM TO THE REQUIREMENTS OF NEC SECTION 690. CONSULT WITH AHJ AND UTILITY CO. FOR ADDITIONAL REQUIREMENTS PRIOR TO INSTALLATION.
2. ACTUAL ROUTING OF ALL CONDUITS, LOCATION OF ALL EQUIPMENT AND COORDINATION WITH OTHER TRADES SHALL BE THE RESPONSIBILITY OF THE INSTALLING CONTRACTOR. ENSURE THE WORK OF OTHER TRADES DOES NOT SHADE THE PV ARRAY. PROVIDE PULL BOXES AND HANDHOLES AS REQUIRED BY THE NEC AND IN COORDINATION WITH SPECIFICATIONS.
3. OPEN WIRING CONNECTING THE INDIVIDUAL PV MODULES SHALL BE PERMITTED. TRANSITION TO CONDUIT WHEN CONDUCTORS ROUTE AWAY FROM THE ARRAY AND UPON ENTERING THE BUILDING. CONDUIT SHALL BE EMT OR RIGID METAL PER THE SPECIFICIATIONS. PVC CONDUIT SHALL NOT BE PERMITTED.
4. INCREASE WIRE SIZE TO COMPENSATE FOR POTENTIAL VOLTAGE DROP, ELEVATED AMBIENT TEMPERATURES, EXPOSURE TO SUNLIGHT AND CONDUCTOR BUNDLING WHERE REQUIRED.
5. PV SYSTEM CIRCUIT BREAKERS SHALL BE SUITABLE FOR BACK FED OPERATION. LOCATE BREAKER ON THE OPPOSITE END OF BUS BAR FROM THE MAIN BREAKER IN ACCORDANCE WITH NEC ARTICLE 705.12 FOR A LOAD SIDE INTERCONNECTION.
6. PROPERLY WATER TIGHT SEAL ALL PENETRATIONS. MINIMIZE THE QUANTITY OF PENETRATIONS, WHERE POSSIBLE.
7. PROVIDE SUITABLE CABLE MANAGEMENT FOR WIRING DIRECTLY BENEATH THE ARRAY. PLASTIC CABLE TIES ARE STRICTLY PROHIBITED. REFER TO SPECIFICATION FOR ADDITIONAL INFORMATION.

1 ONE LINE DIAGRAM - SOLAR
SCALE: NOT TO SCALE

GENERAL SHEET NOTES

A. **ADDITIVE OPTION NO. 6, BASE BID** PROVIDE ALL UNDERGROUND CONDUITS ASSOCIATED WITH PHOTOVOLTAIC SYSTEM INCLUDING BUT NOT LIMITED TO, HANDHOLES, CONDUIT STUB-UPS BETWEEN MAIN ELECTRICAL ROOM, PHOTOVOLTAIC DISTRIBUTION PANEL AND AC COMBINER BOXES. CAP, PROTECT AND MARK CONDUIT LOCATIONS WITH DETECTABLE UNDERGROUND TAPE FOR IMPLEMENTATION OF FULLY FUNCTIONING PHOTOVOLTAIC SYSTEM IN THE FUTURE. A PLAN INDICATING UNDERGROUND CONDUIT SIZE/QUANTITY/ROUTING FOR FUTURE PHOTOVOLTAIC WILL BE REQUIRED FOR REVIEW PRIOR TO BACKFILL. ALL UNDERGROUND CONDUITS WILL BE REQUIRED TO BE SHOWN IN AS-BUILT DOCUMENTATION.
B. **ADDITIVE OPTION NO. 6, OPTION** PROVIDE PARKING SHADE CANOPY MOUNTED PHOTOVOLTAIC PANELS, DC CONDUCTORS, INVERTERS, AC COMBINER BOXES, PHOTOVOLTAIC DISTRIBUTION PANELBOARDS, AND ALL OTHER REQUIRED PHOTOVOLTAIC HARDWARE AND ACCESSORIES FOR THE CONSTRUCTION OF A COMPLETE AND FUNCTIONING PHOTOVOLTAIC SYSTEM AS NOTED IN CONSTRUCTION DRAWINGS AND SPECIFICATIONS. NOTE, PARKING SHADE CANOPIES ARE NOT PART OF PHOTOVOLTAIC SYSTEM OPTION AND ARE PROVIDED BY OTHERS.
C. SEE DRAWING E0.1 FOR ABBREVIATIONS, SYMBOLS, GENERAL NOTES. 4
D. THE CONTRACTOR SHALL COORDINATE EXACT LOCATION OF EQUIPMENT POWER CONNECTIONS WITH EQUIPMENT INSTALLER PRIOR TO ROUGH-IN.
E. COORDINATE FINAL LOCATION OF MECHANICAL EQUIPMENT AND ASSOCIATED DISCONNECT SWITCHES, STARTERS, VFDS, CONTROL POWER AND OTHER POWER REQUIREMENTS WITH DIV 23 AND MECHANICAL DRAWINGS.
F. SEE MECHANICAL EQUIPMENT SCHEDULE FOR ASSOCIATED OVERCURRENT DEVICES, DISCONNECT SWITCHES, STARTERS AND WIRES.
G. VOLTAGE DROP SHALL BE LIMITED TO LESS THAN 3% FOR ALL BRANCH CIRCUITS AND 2% FOR ALL FEEDERS.
H. CONTRACTOR SHALL COORDINATE AND FIELD VERIFY REQUIREMENT OF NEUTRAL CONDUCTOR FOR ALL EQUIPMENT AND PROVIDE NEUTRAL CONDUCTOR AS NECESSARY.
I. ALL LIFE SAFETY AND LIGHTING PANELBOARDS SHALL BE EQUIPPED WITH TYPE 2 SPD.
J. ALL AUTOMATIC TRANSFER SWITCHES SHALL BE 4 POLE AND EQUIPPED WITH BYPASS ISOLATION.
K. ALL UTILITY TRANSFORMERS DESCRIBED AS NAVOPACHE TRANSFORMER TO BE COORDINATED WITH UTILITY AND PROVIDED BY UTILITY. COORDINATE ALL FINAL REQUIREMENTS AND AVAILABLE FAULT CURRENT CONTRIBUTIONS BASED ON SUPPLIED EQUIPMENT. BASIS OF DESIGN 2500KVA, AND 5%Z
L. BASIS OF DESIGN ELECTRICAL EQUIPMENT MANUFACTURERS ARE SIEMENS, ASCO, AND CATERPILLAR. EQUIVALENT EQUIPMENT FROM APPROVED MANUFACTURERS IS ACCEPTABLE, PER DIV 26 SPECIFICATIONS. 6

SHEET KEYNOTES

FEEDER SCHEDULE

100	4#1 + 1#8 G, 1 1/2" C
250	4#250KCMIL + 1#4 G, 3"C
400	2 SETS OF 4#350 + 1#3 G, (2) 2" C
600	2 SETS OF 4#350KCMIL + 1#1 G, (2) 3" C
800	3 SETS OF 4#300KCMIL + 1#1/0 G, (3) 3" C

IHS Whiteriver Hospital

200 W Hospital Drive
Whiteriver, Arizona, 85941

IHS Project #: 131445
IHS Contract #: 75H70123R00008
IHS Award Date: 02/02/2024

BASED ON PROGRAM OF REQUIREMENTS DATED [**03/26/22**], POR AMENDMENT DATED [**02/03/25**], AND ON SCHEMATIC DRAWINGS APPROVED [**11/19/24**].

SMITHGROUP

455 NORTH THIRD STREET
SUITE 250
PHOENIX, AZ 85004
602.265.2200
smithgroup.com

ISSUED FOR	DATE
BID ADDENDUM-G	12JUN26
BID ADDENDUM-E	28MAY26
BID ADDENDUM-A	16APR26
FINAL CONSTRUCTION DOCUMENTS	05MAR26

SEALS AND SIGNATURES

Registered Professional Engineer CERTIFICATE NO. 54673 DANIEL L. PETERSON Date Signed 6-30-26 ARIZONA, U.S.A.
EXPIRES: 6-30-28

ELECTRICAL ONE LINE DIAGRAM - SOLAR

Drawn By: Whittington Checked By: Baca
14904.000
PROJECT NUMBER

CD **E5.8**
SHEET NUMBER

Plot Date: 6/12/2026 1:13:27 PM Whittington

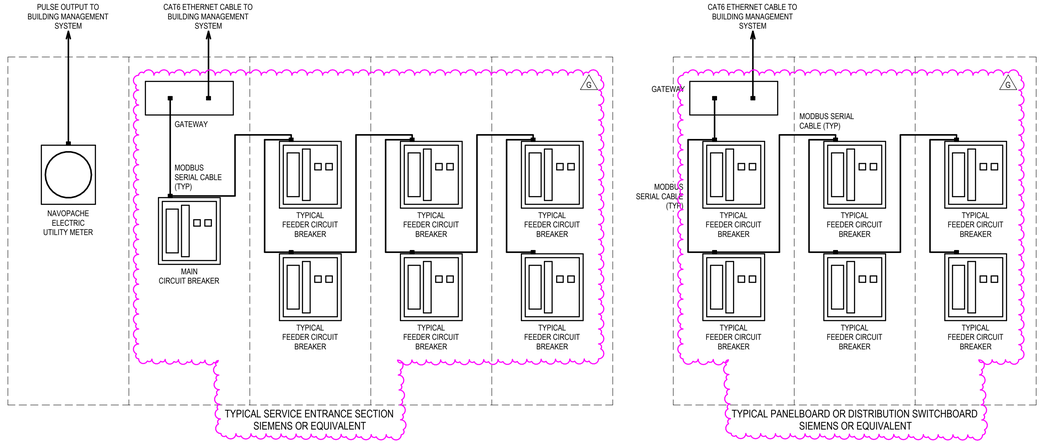

NOTES :

1. METERING SYSTEM SHOWN IS PROVIDED AS PART OF BASIS OF DESIGN ELECTRICAL EQUIPMENT MANUFACTERER, SIEMENS. THE METERING SYSTEM IS REPRESENTATIVE OF METERING POINTS AND REQUIRED DATA COLLECTION. EQUIVALENT METERING AND EQUIPMENT FROM APPROVED MANUFACTURERS IS ACCEPTABLE, PER DIV 26 SPECIFICATIONS. G

6 SERVICE ENTRANCE SECTION AND DISTRIBUTION SWITCHBOARD SUB METERING DIAGRAM
SCALE: NOT TO SCALE

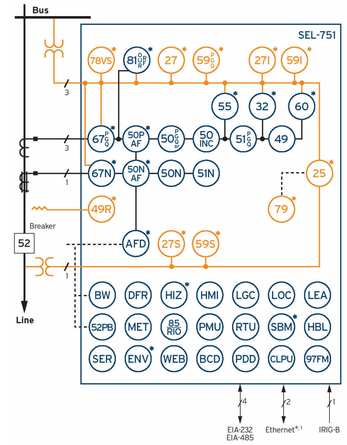

NOTES :

1. PROVIDE PROTECTION FUNCTIONS REQUIRED BY UTILITY AND RECOMMENDED BY MICROGRID MANUFACTURER

7 SEL-751 DETAIL
SCALE: NONE

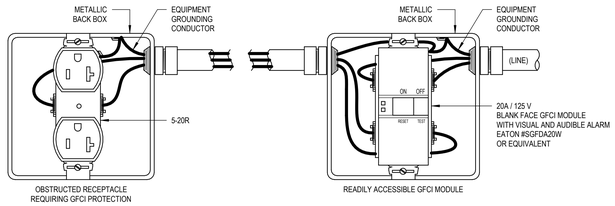

NOTES :

1. PROVIDE BLANK FACE GFCI MODULE AS INDICATED ON PLANS.

4 BLANK FACE GFCI MODULE & RECEPTACLE DETAIL
SCALE: NONE

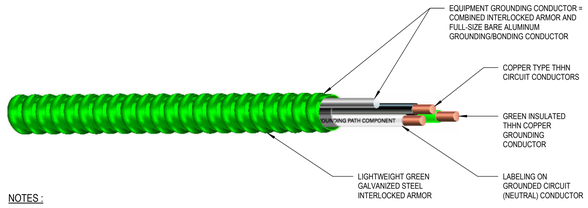

NOTES :

1. WHERE MC CABLE APPLICATION IS IN NEC COMPLIANCE AND SUITABLE PER SPECIFICATIONS, HEALTHCARE FACILITY (HCF) MC CABLE SHALL BE UTILIZED. STANDARD MC CABLE IS NOT ACCEPTABLE WITHIN THE SCOPE OF THIS PROJECT.

5 HEALTHCARE FACILITY (HCF) MC CABLE DETAIL
SCALE: NONE

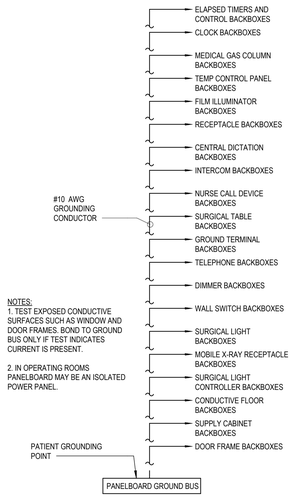

NOTES:
1. TEST EXPOSED CONDUCTIVE SURFACES SUCH AS WINDOW AND DOOR FRAMES. BOND TO GROUND BUS ONLY IF TEST INDICATES CURRENT IS PRESENT.

2. IN OPERATING ROOMS PANELBOARD MAY BE AN ISOLATED POWER PANEL.

1 PATIENT CARE AREA GROUNDING DETAIL
SCALE: N.T.S.

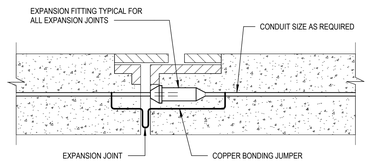

2 EXPANSION JOINT CONDUIT DETAIL
SCALE: NONE

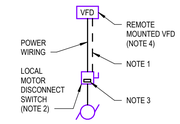

NOTES :

1. PROVIDE INTERCONNECTING WIRING AND VFD PROGRAMMING AS REQUIRED TO INTERLOCK VFD AND DISCONNECT SWITCH SUCH THAT VFD CANNOT ENERGIZE LOAD CONDUCTORS WHEN LOCAL MOTOR DISCONNECT SWITCH IS IN THE OPEN POSITION.
2. PROVIDE DISCONNECT SWITCH WITH NO/NC AUXILLIARY CONTACTS WHICH CHANGE STATE WHEN SWITCH IS OPENED/CLOSED.
3. PROVIDE LABEL WHICH READS THE FOLLOWING: "MOTOR MUST BE PROPERLY SHUT DOWN FROM THE VARIABLE FREQUENCY DRIVE BEFORE OPENING THIS DISCONNECT. DO NOT OPEN THIS DISCONNECT WHILE THE MOTOR IS RUNNING."
4. WHERE VFD IS LOCATED MORE THAN 100' FROM MOTOR, PROVIDE 5% REACTOR ON THE LOAD SIDE OF THE VFD.

3 REMOTE VFD REQUIREMENTS
SCALE: NONE

INDIAN HEALTH SERVICE · IHS · 1955 · DEPARTMENT OF HEALTH & HUMAN SERVICES, USA

IHS Whiteriver Hospital

200 W Hospital Drive
Whiteriver, Arizona, 85941

IHS Project #: 131445
IHS Contract #: 75H70123R00008
IHS Award Date: 02/02/2024

BASED ON PROGRAM OF REQUIREMENTS DATED [**03/26/22**], POR AMENDMENT DATED [**02/03/25**], AND ON SCHEMATIC DRAWINGS APPROVED [**11/19/24**].

SMITHGROUP

455 NORTH THIRD STREET
SUITE 250
PHOENIX, AZ 85004
602.265.2200
smithgroup.com

ISSUED FOR	DATE
BID ADDENDUM-G	12JUN26
FINAL CONSTRUCTION DOCUMENTS	23JAN26

SEALS AND SIGNATURES

Registered Professional Engineer (Electrical) CERTIFICATE NO. 54673 DANIEL L. PETERSON Date Signed 06-22-26 ARIZONA U.S.A.

EXPIRES: 6-30-28

ELECTRICAL DETAILS

Drawn By: Whittington Checked By: Baca

14904.000
PROJECT NUMBER

CD **E6.0.5**
SHEET NUMBER

Plot Date: 6/12/2026 1:13:28 PM Whittington

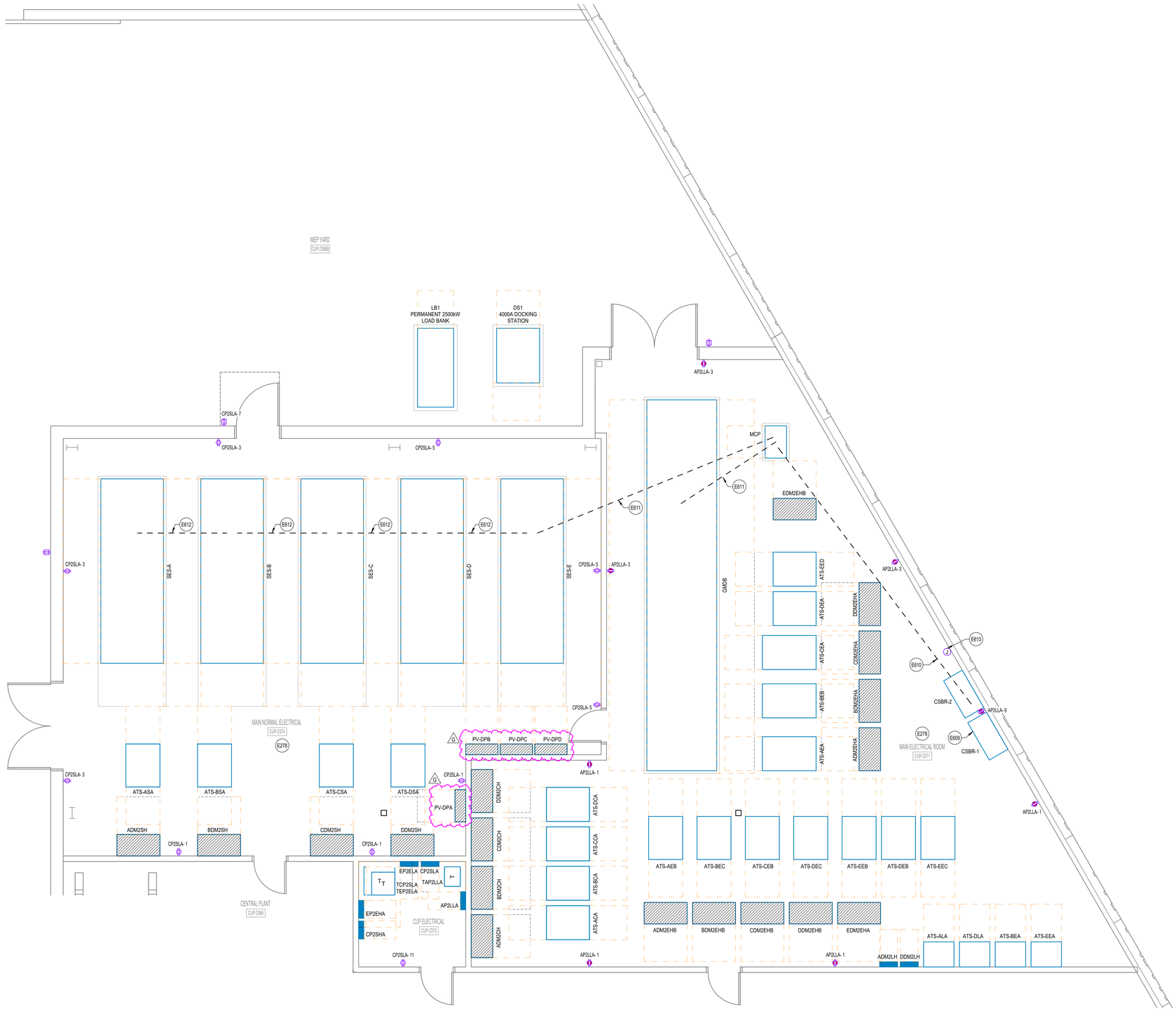

1 2ND LEVEL MAIN ELECTRICAL ROOMS
SCALE: 1/4" = 1'-0"

GENERAL SHEET NOTES

A. SEE DRAWING E0.1 FOR ABBREVIATIONS, SYMBOLS, GENERAL NOTES AND DEVICE MOUNTING HEIGHT OF WALL MOUNTED DEVICES, UON.
B. ALL BRANCH CIRCUIT WIRING SHALL BE A MINIMUM SIZE OF #10 AWG. REFER TO SHEET E0.2 FOR ADDITIONAL SIZING INFORMATION.
C. COORDINATE ALL DEVICE LOCATIONS AND MOUNTING HEIGHTS WITH ARCHITECTURAL DRAWINGS PRIOR TO ROUGH-IN.
D. COORDINATE ALL HEADWALL DEVICE LOCATIONS WITH ARCHITECTURAL HEADWALL ELEVATIONS PRIOR TO ROUGH-IN.
E. THE CONTRACTOR SHALL COORDINATE EXACT LOCATION OF EQUIPMENT POWER CONNECTIONS WITH EQUIPMENT INSTALLER PRIOR TO ROUGH-IN.
F. CONTRACTOR SHALL BE RESPONSIBLE FOR SUPPLYING ANY REQUIRED TRANSFORMER/POWER SUPPLIES FOR DOOR HARDWARE. COORDINATE WITH ARCHITECTURAL AND SECURITY DRAWINGS FOR DOOR HARDWARE. PROVIDE 120V POWER AS REQUIRED.
G. CONTRACTOR SHALL COORDINATE AND FIELD VERIFY REQUIREMENT OF NEUTRAL CONDUCTOR FOR ALL EQUIPMENT AND PROVIDE NEUTRAL CONDUCTOR AS NECESSARY.
H. ALL CIRCUITS SHALL HAVE DEDICATED NEUTRAL CONDUCTOR, UNLESS NOTED OTHERWISE.
I. ALL CONDUCTORS SHALL BE COPPER, UNLESS NOTED OR SCHEDULED OTHERWISE.
J. TRIPPING OF GFCI RECEPTACLES SHALL NOT AFFECT THE DOWNSTREAM RECEPTACLES.
K. NO MORE THAN 3 CIRCUITS MAY SHARE A HOMERUN.
L. PROVIDE 120V CIRCUITS FOR CONTROL PANELS AS REQUIRED BY CONTROL VENDOR. CIRCUIT TO MECHANICAL PANEL WITHIN THE SPACE.
M. ALL UNUSED WALL OUTLETS TO BE COVERED WITH BLANK PLATE. ALL BLANK PLATE COLORS TO MATCH WALL COLOR.
N. REFER TO 'T' SERIES PLANS FOR LOW VOLTAGE BACK BOX AND RACEWAY REQUIREMENTS.
O. ALL CONDUIT ROUTED WITHIN SLAB SHALL COMPLY WITH GUIDELINES LISTED IN STRUCTURAL DRAWINGS.
P. FOR DEVICES LABELED WITH RECTANGULAR TAG, REFER TO KITCHEN EQUIPMENT SCHEDULE ON E7 SERIES FOR CONNECTIONS, CIRCUITS AND DEVICE TYPES.
Q. WALL MOUNTED AND SUSPENDED TRANSFORMERS SHALL BE MOUNTED SUCH THAT THE TRANSFORMER ENCLOSURE AND ALL ELEMENTS OF THE HANGER SUPPORT SYSTEM ARE LOCATED ABOVE THE MINIMUM WORKING SPACE HEIGHT IN COMPLIANCE WITH NEC 110.26.
R. TAMPER RESISTANT RECEPTACLES SHALL BE PROVIDED IN COMPLIANCE WITH 2023 NEC ARTICLES 406.18 AND 517.18(C) AND IN LOCATIONS DEEMED PRUDENT FOR SAFE FACILITY OPERATION. ENGINEER SHALL PROVIDE DOCUMENTATION INDICATING AREAS REQUIRING TAMPER RESISTANT RECEPTACLES DURING SUBMITTAL PROCESS.
S. ELECTRICAL ROOM & UPS ROOM PERSONNEL DOORS SHALL SWING OUTWARD AND BE EQUIPPED WITH LISTED PANIC HARDWARE OR LISTED FIRE EXIT HARDWARE.
T. EXTEND LINE SIDE OF NEAREST 120V GENERAL RECEPTACLE POWER CIRCUIT TO ELECTRONIC PLUMBING VALVES. COORDINATE ELECTRONIC PLUMBING VALVE INFRASTRUCTURE REQUIREMENTS AND LOCATION WITH PLUMBING CONTRACTOR AND EQUIPMENT MANUFACTURER PRIOR TO COMMENCING WORK. INSTALL PER EQUIPMENT MANUFACTURERS SPECIFICATIONS.
U. DUPLEX RECEPTACLE SHOWN AT +90° IN PATIENT CARE AREAS IS INTENDED TO SERVE MOTORIZED PATIENT LIFT. COORDINATE MOUNTING LOCATION AND VERIFY REQUIREMENTS WITH EQUIPMENT INSTALLER PRIOR TO ROUGH-IN.
V. PROVIDE GROUND FAULT CIRCUIT INTERRUPTER PROTECTION FOR PERSONNEL IN A READILY ACCESSIBLE LOCATION FOR EACH RECEPTACLE LOCATED IN THE AREAS REQUIRED BY NEC 210.8(B).

SHEET KEYNOTES

E278 PROVIDE (5) 1-1/2" SPARE CONDUITS (10 TOTAL) STUBBED TO ACCESSIBLE EXTERIOR AREA TO WEST AND NORTH OF BUILDING FROM ELECTRICAL ROOM. FIELD COORDINATE ACCESSIBLE STUB LOCATION WITHIN ROOM. SPARE CONDUIT TO EXTEND A MINIMUM OF 6' BEYOND BUILDING FOUNDATION. PROVIDE PULL STRING, DETECTOR TAPE AT EXTERIOR AND CAP AT BOTH ENDS.

E609 PROVIDE 24VDC STATION BATTERY SYSTEM FOR SWITCHGEAR CONTROL POWER. SYSTEM SHALL PROVIDED POWER TO PARALLELING GEAR AND (5) SERVICE ENTRANCE LINEUPS AS WELL AS PV MICROGRID CONTROLLER AS NOTED IN ADJACENT ROOM. SYSTEM SHALL BE DESIGNED WITH 2N BATTERY RACK REDUNDANCY (FULLY REDUNDANT. PROVIDE 120V BATTERY CHARGER MOUNTED TO WALL ABOVE BATTERY RACKS. SYSTEM SHALL BE PROVIDED AS TURN KEY SOLUTION WITH PARALLELING GEAR 'MCP' SYSTEM. REFER TO SINGLE LINES FOR ADDITIONAL INFORMATION. COORDINATE FINAL REQUIREMENTS WITH SYSTEM PROVIDER.

E610 PROVIDE (2) 2 INCH CONDUITS FROM BATTERY RACK TO 'MCP' FOR STATION BATTERY CONTROL AND POWER CIRCUITS. COORDINATE FINAL REQUIREMENTS WITH SYSTEM PROVIDER.

E611 PROVIDE (2) 2 INCH CONDUITS FROM 'MCP' TO EACH SWITCHGEAR LINEUP FOR STATION BATTERY SYSTEM. COORDINATE FINAL REQUIREMENTS WITH SYSTEM PROVIDER.

E612 PROVIDE (1) 2 INCH CONDUIT BETWEEN EACH SWITCHGEAR LINEUP TO DAISY CHAIN CONNECT FOR STATION BATTERY SYSTEM. COORDINATE FINAL REQUIREMENTS WITH SYSTEM PROVIDER.

E613 PROVIDE (1) 1 INCH CONDUIT FROM 'MCP' TO PV MICROGRID CONTROLLER / DATA MANAGER. COORDINATE FINAL LOCATION WITH SYSTEM PROVIDER.

INDIAN HEALTH SERVICE · IHS · 1955 · DEPARTMENT OF HEALTH & HUMAN SERVICES, USA

IHS Whiteriver Hospital

200 W Hospital Drive
Whiteriver, Arizona, 85941

IHS Project #: 131445
IHS Contract #: 75H70123R00008
IHS Award Date: 02/02/2024

BASED ON PROGRAM OF REQUIREMENTS DATED [**03/26/22**], POR AMENDMENT DATED [**02/03/25**], AND ON SCHEMATIC DRAWINGS APPROVED [**11/19/24**].

SMITHGROUP

455 NORTH THIRD STREET
SUITE 250
PHOENIX, AZ 85004
602.265.2200
smithgroup.com

ISSUED FOR	DATE
BID ADDENDUM-C	12JUN26
FINAL CONSTRUCTION DOCUMENTS	23JAN26

SEALS AND SIGNATURES

Registered Professional Engineer (Electrical) CERTIFICATE NO. 54673 DANIEL L. PETERSON Date Signed 06-12-26 ARIZONA U.S.A.

EXPIRES: 6-30-28

ENLARGED ELECTRICAL ROOMS - SECOND LEVEL (UPPER GROUND)

Drawn By: Whittington Checked By: Baca

14904.000
PROJECT NUMBER

CD

E6.2.1
SHEET NUMBER

Plot Date: 6/12/2026 1:13:33 PM Whittington