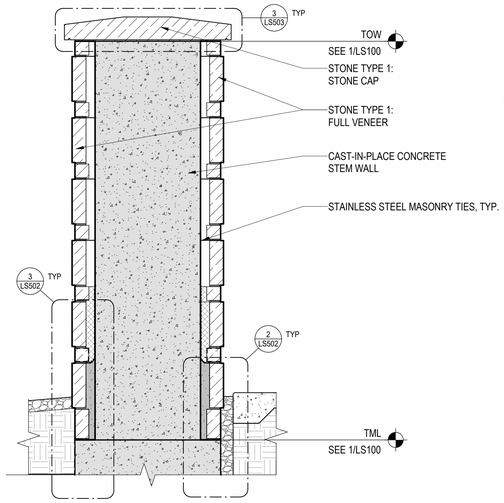

1 PERIMETER END COLUMN SECTION - TYP.
3/4" = 1'-0"

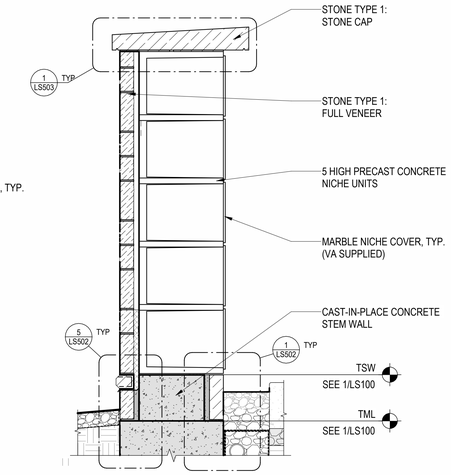

2 PERIMETER NICHE WALL SECTION - TYP.
3/4" = 1'-0"

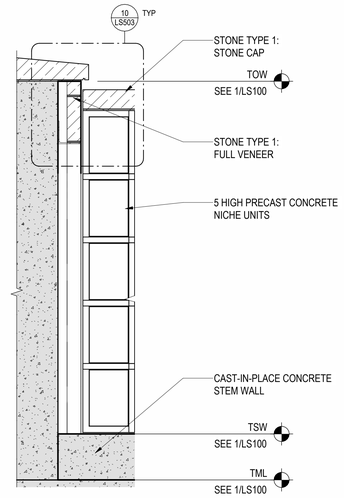

3 COLUMN TO NICHE WALL CROSS-SECTION, TYP.
3/4" = 1'-0"

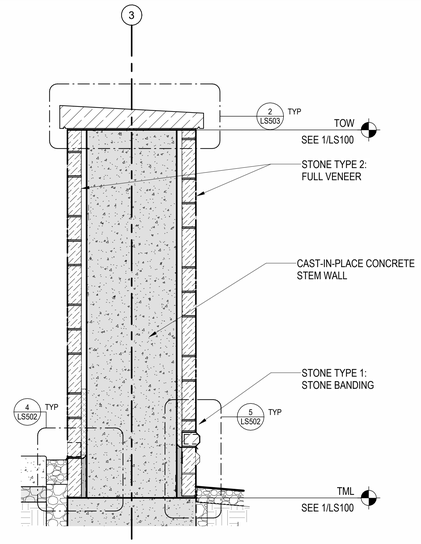

4 PERIMETER CONNECTOR WALL SECTION - TYP.
3/4" = 1'-0"

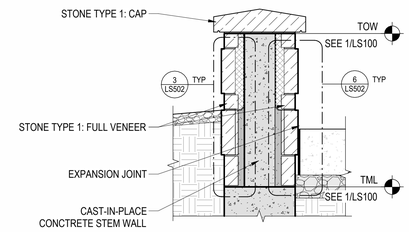

5 WING WALL SECTION - TYP.
3/4" = 1'-0"

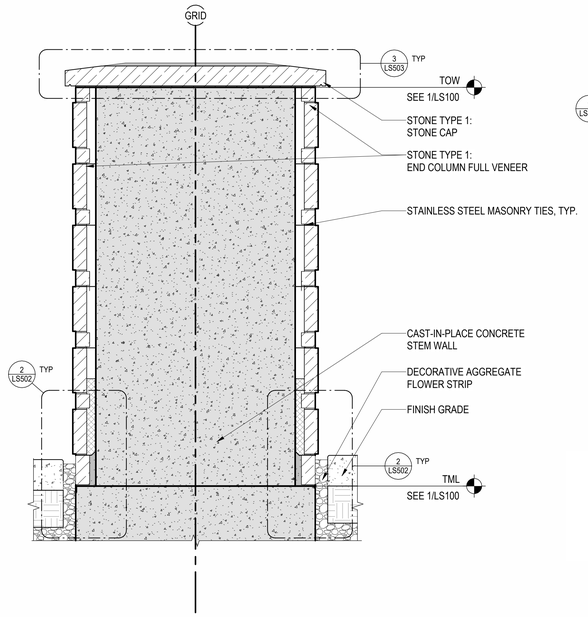

6 DOUBLE-SIDED COLUMN SECTION - TYP.
3/4" = 1'-0"

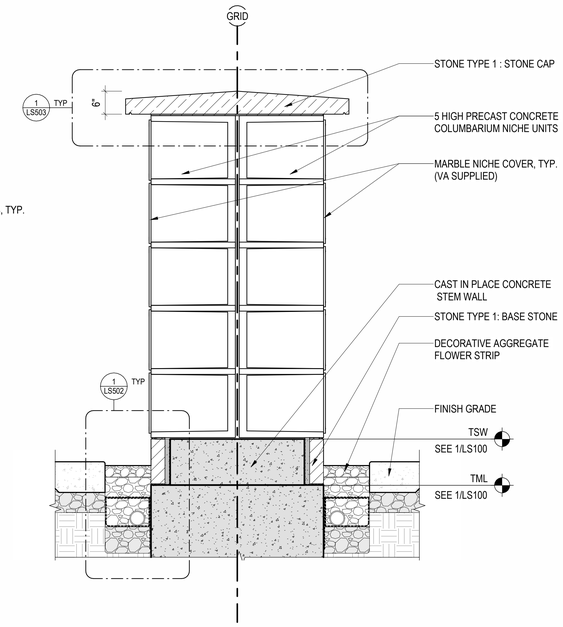

7 DOUBLE-SIDED NICHE WALL SECTION - TYP.
3/4" = 1'-0"

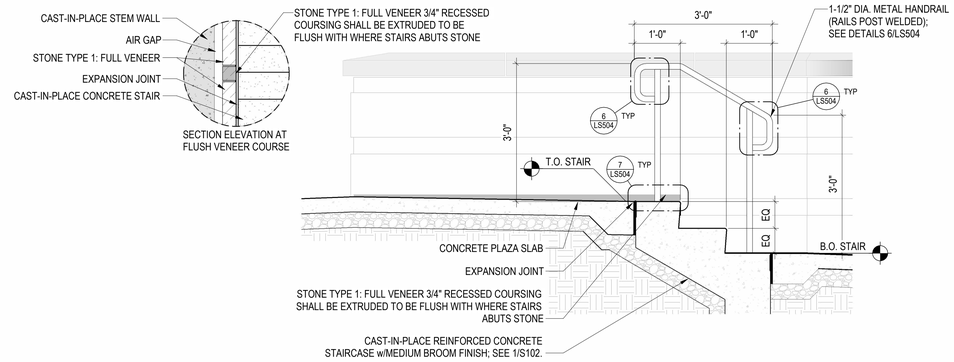

8 COLUMBARIUM STAIR SECTION - WEST WING WALL
3/4" = 1'-0"

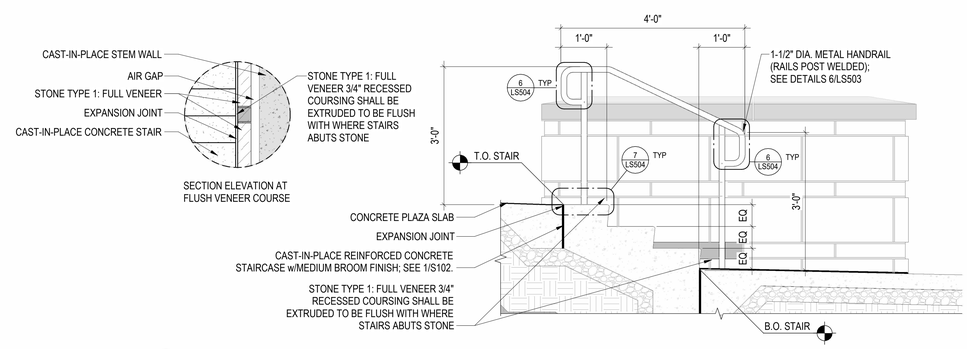

9 COLUMBARIUM STAIR SECTION - EAST WING WALL
3/4" = 1'-0"

BID DOCUMENTS

Revisions:	Date:

CONSULTANTS

IRRIGATION:	GEOTECHNICAL:	COST ESTIMATING:
WATER IN MOTION, INC.	TERRACON	OCMI
175 JAMES AVENUE NORTH MINNEAPOLIS, MN 55405 952.229.1911	611 LUNKEN PARK DRIVE CINCINNATI, OHIO 45226 513.612.9020	2100 NORTH GREENVILLE AVENUE RICHARDSON, TEXAS 75082 469.431.0571
TIMOTHY MALOOLY	JEFF DUNLAP, PE	KYLE VEATER

ARCHITECT/ENGINEER OF RECORD

ANDERSON

13605 1st Ave. N. #100 Plymouth, MN 55441
P 763.412.4000 | F 763.412.4090 | ae-mn.com
Anderson Engineering of Minnesota, LLC | Proj # 18125

STAMP

Office of Design and Construction Services

VA U.S. Department of Veterans Affairs

Drawing Title	Phase	Project Title	Project Number
COLUMBARIUM - SECTIONS	BID DOCUMENTS	DAYTON NATIONAL CEMETERY GRAVESITE EXPANSION	810CM3033
Approved:		Location: 4400 W THIRD ST, DAYTON, OH 45428	Building Number
		Issue Date: DECEMBER 5, 2025 / Checked: JAF / Drawn: RJL	Drawing Number: LS300

2026-02-11 9:19:07 C:\Users\rjlabelt\Documents\18125 DNC Columbarium_RJLabelt4888.rvt

VA FORM 08 - 6231