ABBREVIATIONS & SYMBOLS:	
+/-	PLUS OR MINUS
@	AT
A.B.	ANCHOR BOLT
A.P.A.	AMERICAN PLYWOOD ASSOCIATION
A.S.T.M.	AMERICAN SOCIETY OF TESTING MATERIALS
ARCH.	ARCHITECTURAL
B.B.	BOND BEAM
B.O.	BOTTOM OF
BLK.	BLOCK
BM.	BEAM
BOT.	BOTTOM
BRG.	BEARING
C	CHANNEL
C.M.U.	CONCRETE MASONRY UNIT
CCJ.	CONSTRUCTION CONTROL JOINT
CJ	CONTROL JOINT
CL	CENTER LINE
CLR.	CLEAR
COL.	COLUMN
CONC.	CONCRETE
CONN.	CONNECTION
CONT.	CONTINUOUS
D.L.	DEAD LOAD
D.T.	DOUBLE TEE (DRAIN TILE)
DBL.	DOUBLE
DIA.	DIAMETER
DIM.	DIMENSION
DWL.	DOWEL
E.F.	EACH FACE
E.J.	EXPANSION JOINT
E.W.	EACH WAY
EA.	EACH
EL.	ELEVATION
ELEV.	ELEVATOR
EQ.	EQUAL
EX.	EXISTING
EXC.	EXCAVATION
EXP.	EXPANSION
F.D.	FLOOR DRAIN
FDN.	FOUNDATION
FT.	FEET
FTG.	FOOTING
G.C.	GENERAL CONTRACTOR
G.T.	GIRDER TRUSS
GA.	GAUGE
GALV.	GALVANIZE
HC	HOLLOWCORE
HORIZ.	HORIZONTAL
HSS	HOLLOW STRUCTURAL SECTION
I.F.	INSIDE FACE
INT.	INTERIOR
JST.	JOIST
KLF.	KIPS PER LINEAR FOOT
KSI.	KIPS PER SQUARE INCH
L	ANGLE
LB	LEDGER BEAM
LL	LIVE LOAD / DOUBLE ANGLE
LLH	LONG LEG HORIZONTAL
LLV	LONG LEG VERTICAL
LONG.	LONGITUDINAL
LWC	LIGHT WEIGHT CONCRETE
M.C.	MECHANICAL CONTRACTOR
MAS.	MASONRY
MAX.	MAXIMUM
MECH.	MECHANICAL
MFG.	MANUFACTURER
MIN.	MINIMUM
MISC.	MISCELLANEOUS
MTL.	METAL
N.	NORTH
N.T.S.	NOT TO SCALE
NS.	NON-SHRINK
O.C.	ON CENTER
O.D.	OUTSIDE DIAMETER
O.F.	OUTSIDE FACE
O.H.	OVERHEAD
OPNG.	OPENING
ORIG.	ORIGINAL
P.A.F.	POWDER ACTUATED FASTENER
P.C.	PRECAST CONCRETE
PART.	PARTITION
PL	PLATE
PLF	POUNDS PER LINEAR FOOT
PNL.	PANEL
PSF	POUNDS PER SQUARE FOOT
PSI	POUNDS PER SQUARE INCH
PW	PLYWOOD
R. OR RAD.	RADIUS
R.D.	ROOF DRAIN
REINF.	REINFORCING
REQD.	REQUIRED
S.A.	STUD ANCHOR
S.B.	SOIL BORING
S.D.	SEE DETAIL
S.D.L.	SUPERIMPOSED DEAD LOAD
S.E.R.	STRUCTURAL ENGINEER OF RECORD
S.L.	SNOW LOAD
S.L.L.	SUPERIMPOSED LIVE LOAD
S.S.	STAINLESS STEEL
SCHED.	SCHEDULE
SHT.	SHEET
SIM.	SIMILAR
SPA.	SPACING / SPACES
SPECS.	SPECIFICATIONS
SQ.	SQUARE
STD.	STANDARD
STL.	STEEL
T & B	TOP & BOTTOM
T & G	TONGUE & GROOVE
T.M.L.	TOP OF MASONRY LEDGE
T.O.	TOP OF
T.O.B.	TOP OF BEAM
T.O.J.	TOP OF JOIST
T.O.S.	TOP OF STEEL
T.O.W.	TOP OF WALL
T.S.E.	TOP OF STEEL ELEVATION
T.S.W.	TOP OF STEM WALL
TEMP.	TEMPORARY
THK.	THICK / THICKENED
TRANS.	TRANSVERSE
TYP.	TYPICAL
U.O.N.	UNLESS OTHERWISE NOTED
V. / VER.	VERIFY
VERT.	VERTICAL
W.L.	WIND LOAD
W/	WITH
W/O	WITH OUT
WD.	WOOD
WTS.	WEIGHTS
WWF	WELDED WIRE FABRIC

GENERAL CONSTRUCTION NOTES:

1. ALL WORK SHALL COMPLY WITH THE PG-18-10 STRUCTURAL DESIGN MANUAL DATED 7/1/2023 AS APPROVED BY THE DEPARTMENT OF VETERANS AFFAIRS. THE FOLLOWING CODES APPLY:
   - -INTERNATIONAL BUILDING CODE 2024
   - -ASCE/SEI 7-02
   - -VA HANDBOOK H-18-8 SEISMIC DESIGN REQUIREMENTS
2. REFERENCE STANDARDS: UNLESS OTHERWISE NOTED (U.O.N.), ALL STANDARDS SHALL BE CURRENT EDITION, WITH LATEST ADDENDA, IF APPLICABLE.
3. THE CONTRACTOR SHALL VERIFY ALL CONTRACT DOCUMENTS, SITE ELEVATIONS, DIMENSIONS AND CONDITIONS PRIOR TO STARTING WORK AND SHALL NOTIFY THE ARCHITECT/ ENGINEER OF ANY DISCREPANCIES OR INCONSISTENCIES.
4. SPECIFIC NOTES AND DETAILS SHALL TAKE PRECEDENCE OVER GENERAL NOTES.
5. THE CONTRACT STRUCTURAL DRAWINGS AND SPECIFICATIONS REPRESENT THE FINISHED STRUCTURE. UNLESS OTHERWISE INDICATED, THEY DO NOT INDICATE THE MEANS OR METHOD OF CONSTRUCTION. TEMPORARY BRACING AND SHORING AGAINST WIND AND ERECTION CONDITIONS DURING CONSTRUCTION OF THE BUILDING, SHALL BE THE RESPONSIBILITY OF THE CONTRACTOR. THE CONTRACTOR IS SOLELY RESPONSIBLE FOR THE PROTECTION OF THE STRUCTURE DURING ALL PHASES OF DEMOLITION, CONSTRUCTION, AND INSTALLATION.
6. NO AREA OF THE STRUCTURE SHALL BE LOADED WITH CONSTRUCTION MATERIALS OR EQUIPMENT THAT EXCEEDS FINAL DESIGN CRITERIA.
7. VERIFY LOCATION OF BOX OUTS AND OPENINGS WITH MECHANICAL CONTRACTORS. OPENING SIZES AND LOCATIONS SHOWN FOR PIPES, DUCTS ETC. ARE FOR GENERAL INFORMATION ONLY AND SHALL BE VERIFIED WITH THE MECHANICAL CONTRACTOR BEFORE COMMENCING THE WORK.
8. IF MECHANICAL AND ELECTRICAL EQUIPMENT SIZES, WEIGHTS, OR LOCATIONS DO NOT COINCIDE WITH EQUIPMENT SHOWN ON PLANS, COORDINATE ADJUSTMENTS WITH THE STRUCTURAL ENGINEER.
9. HOLES, PIPES, SLEEVES, ETC. NOT SHOWN ON THE DRAWINGS MUST BE APPROVED BY THE STRUCTURAL ENGINEER BEFORE PLACEMENT THROUGH STRUCTURAL MEMBERS.
10. CONTRACTOR SHALL PROVIDE A CAST-IN SLEEVE FOR ALL HORIZONTAL ELEMENTS THAT EXTEND THROUGH FOOTING. IE -DRAIN TILE, ELECTRICAL CONDUIT, MECHANICAL PIPING, ETC. ALL SLEEVES SHALL BE COORDINATED WITH ARCHITECT/ENGINEER.
11. SHOP DRAWINGS PREPARED BY SUPPLIERS, SUBCONTRACTORS, ETC., SHALL BE DIMENSIONED, REVIEWED, COORDINATED, AND SIGNED/ STAMPED BY THE GENERAL CONTRACTOR PRIOR TO SUBMITTING TO THE STRUCTURAL ENGINEER.
12. FABRICATOR SHALL CLEARLY NOTE CHANGES MADE IN THE SHOP DRAWINGS WHICH DO NOT COMPLY WITH THE CONTRACT DOCUMENTS. REVIEWED APPROVAL SHOP DRAWINGS SHOWING ENGINEERS COMMENTS ACCOMPANIED WITH RECORD SET SHOP SHOP DRAWINGS, SHALL BE AVAILABLE FOR REFERENCE AT THE CONSTRUCTION SITE.
13. CONCRETE ANCHORS SHALL BE SIMPSON "TITEN HD" SCREW ANCHORS OR EQUIVALENT (U.O.N.). INSTALL ANCHORS USING THE MANUFACTURER'S RECOMMENDATIONS.

16. DESIGN LOADS:		
LATERAL LOADS (WIND - MSFRS)		
	IMPORTANCE FACTOR	1.0 Iw
	ULTIMATE WIND SPEED (3 SECOND GUST)	100MPH
	NOMINAL WIND SPEED	78MPH
	RISK CATEGORY	I
	WIND EXPOSURE	"C"
	INTERNAL PRESSURE COEFF	+/- 0.18
LATERAL LOADS (SEISMIC - MSFRS)		
	RISK CATEGORY	I
	SEISMIC IMPORTANCE FACTOR	Ie = 1
	MAPPED SPECTRAL RESPONSE	Ss = 0.2
	MAPPED SPECTRAL RESPONSE	S1 = 0.08
	DESIGN SPECTRAL RESPONSE	Sds = 0.14
	DESIGN SPECTRAL RESPONSE	Sd1 = 0.07
	SITE CLASS	C
	SEISMIC DESIGN CATEGORY	B
	SEISMIC FORCE RESISTING SYSTEM	RIGID NON-BUILDING STRUCTURE
	DESIGN BASE SHEAR	V = 0.042W
	SEISMIC RESPONCE COEFFICIENT	Cs = 0.042
	RESPONSE MODIFICATION FACTOR	N/A
	ANALYSIS PROCEDURE	RIGID NON-BUILDING STRUCTURE

DEFERRED SUBMITTAL SCHEDULE:
PRECAST COLUMBARIUM NICHES & CONNECTIONS

PRE-CAST CONCRETE COLUMBARIUM UNITS - DELEGATED DESIGN REQUIREMENTS:

1. THE CONTRACTOR SHALL PROVIDE STRUCTURAL DESIGN OF THE PRE-CAST CONCRETE COLUMBARIUM UNITS. STRUCTURAL DESIGN SHALL BE SUBMITTED BY THE CONTRACTOR TO THE CONTRACTING OFFICER'S REPRESENTATIVE (COR) AND ENGINEER OF RECORD (EOR) AS A DELEGATED DESIGN SUBMITTAL. DELEGATED SUBMITTALS SHALL INCLUDE DRAWINGS AND CALCULATIONS STAMPED AND SIGNED BY AN ENGINEER APPROPRIATELY LICENSED IN THE STATE OF CONSTRUCTION.

2. THE PURPOSE OF THE EOR'S REVIEW SHALL BE IN DETERMINING THE DRAWINGS AND CALCULATIONS HAVE BEEN PROPERLY SEALED, THAT THE LOAD CRITERIA IS IN GENERAL CONFORMANCE WITH THE CONTRACT DOCUMENTS AND THE REFERENCED BUILDING CODE(S), AND THAT CONNECTIONS TO THE PRIMARY STRUCTURE COMPLY WITH THE STRUCTURE'S DESIGNED CAPABILITIES.

INCLUDED IN THE STRUCTURAL CALCULATIONS AND DESIGN, AT MINIMUM, SHALL BE:
A. DESIGN OF PRE-CAST CONCRETE COLUMBARIUM UNITS.
B. CONNECTION OF PRE-CAST UNITS TO STRUCTURAL FOUNDATIONS, BOTTOM AND TOP.
C. CONNECTION OF PRE-CAST UNITS, BACK TO BACK AND END TO END.
D. CONNECTION OF PRE-CAST UNITS TO NATURAL STONE CAPS.

3. REFER TO SPECIFICATION 03 48 24 - PRE-CAST CONCRETE COLUMBARIUM UNITS.

4. THE STRUCTURAL ENGINEER WILL RELY ON THE SPECIALTY ENGINEER'S SEAL AS CERTIFICATION THAT THE ITEMS DESIGNED BY THE SPECIALTY ENGINEER COMPLY WITH THE CRITERIA SET FORTH IN THE CONTRACT DOCUMENTS AND APPLICABLE CODES AND STANDARDS. THE STRUCTURAL ENGINEER SHALL NOT BE RESPONSIBLE FOR THE ADEQUACY OF DESIGNS PROVIDED BY OTHERS.

FOUNDATION NOTES:

1. FOOTING ELEVATIONS ARE TO TOP OF FOOTING (T.O. FTG.), UNLESS OTHERWISE NOTED.
2. FOOTINGS ARE DESIGNED FOR A MINIMUM NET ALLOWABLE SOIL BEARING PRESSURE OF 2500psf FOR CONTINUOUS AND 1500 psf FOR PAD FOOTINGS. FOUNDATION DESIGN COMPLIES W/ GEOTECHNICAL REPORT DATED: 12/20/2024 BY TERRACON
3. FOOTINGS SHALL BEAR ON NATURAL UNDISTURBED SOIL OR ENGINEERED FILL. SOILS SHALL BE OBSERVED AND APPROVED BY A GEOTECHNICAL ENGINEER PRIOR TO PLACEMENT OF FOOTING CONCRETE. IF NATURAL UNDISTURBED SOILS ARE NOT ENCOUNTERED AND/OR INADEQUATE SOILS ARE NOTED AT FOOTING BEARING LEVEL, ARCHITECT/ENGINEER SHALL BE NOTIFIED PRIOR TO PROCEEDING WITH FURTHER WORK AT THOSE FOOTING LOCATIONS.
4. PROTECT FOOTINGS FROM THE ACTION OF WATER OR FREEZING.
5. FOOTINGS ARE CENTERED UNDER WALLS ABOVE - UNLESS OTHERWISE NOTED.
6. PRIOR TO PLACEMENT OF FOOTING CONCRETE, CLEAN FOOTING EXCAVATIONS OF SNOW, WATER AND DEBRIS.
7. FOOTINGS MAY NOT BE EARTH FORMED.

EXCAVATION & BACKFILL NOTES:

1. EXCAVATION AND BACKFILL SHALL BE EXECUTED IN ACCORDANCE WITH THE PROJECT SPECIFICATIONS.
2. BACKFILL & COMPACTION SHALL BE INSPECTED AND CERTIFIED BY A LICENSED GEOTECHNICAL ENGINEER. REPORTS ARE TO BE SUBMITTED TO THE ARCHITECT/ ENGINEER.
3. FOOTING EXCAVATIONS SHALL BE EXCAVATED TO PROPER LINE AND LEVEL TO ENSURE MINIMUM CONCRETE COVER OF FOOTING REINFORCEMENT FOR FOOTING DEPTH.
4. BACKFILL SHALL BE COMPACTED BY MECHANICAL MEANS. FLOODING OR WATER INUNDATION SHALL NOT BE PERMITTED.
5. BACKFILL SHALL BE PLACED IN ALTERNATING LIFTS ON EACH SIDE OF THE FOUNDATION WALLS TO MAINTAIN STABILITY OF THE FOUNDATION WALLS.
6. BACKFILL SHALL NOT BE PLACED AGAINST BASEMENT FOUNDATION WALLS UNLESS WALLS ARE ADEQUATELY BRACED TOP AND BOTTOM. FINAL WALL BRACING IS BASEMENT SLAB OR ENGINEERED BACKFILL AND 1ST FLOOR STRUCTURE. IF THESE ELEMENTS ARE NOT IN PLACE AT TIME OF BACKFILL, CONTRACTOR SHALL PROVIDE AN ENGINEERED, TEMPORARY BRACING SYSTEM. THE TEMPORARY BRACING SYSTEM PROPOSED SHALL BE SUBMITTED TO THE ARCHITECT/ ENGINEER FOR REVIEW PRIOR TO BACKFILLING.

CONCRETE NOTES:

1. CONCRETE CONSTRUCTION SHALL CONFORM TO AMERICAN CONCRETE INSTITUTE (ACI) CODES AND SPECIFICATIONS. LATEST EDITION. ACI 301 "SPECIFICATIONS FOR STRUCTURAL CONCRETE" ACI 315 "DETAILS & DETAILING OF CONCRETE REINFORCEMENT" ACI 318 "BUILDING CODE REQUIREMENTS FOR REINFORCED CONCRETE".
2. CONCRETE MIX DESIGN SHALL BE BY AN INDEPENDENT TESTING LABORATORY.
3. CAST-IN-PLACE CONCRETE SHALL BE SUBJECT TO TESTING BY AN INDEPENDENT TESTING LABORATORY. SEE PROJECT SPECIFICATIONS FOR REQUIREMENTS.
4. NON WELDED REINFORCING STEEL SHALL BE GRADE 60 DEFORMED, BILLET-STEEL, ASTM A615, U.O.N. ALL WELDED WIRE FABRIC (WWF) SHALL BE PLAIN, ASTM A185.
5. WELDED REINFORCING STEEL SHALL BE GRADE 60, LOW CARBON, ASTM A706.
6. PROVIDE EXTRA REINFORCEMENT AROUND ALL OPENINGS GREATER THAN 12" SQUARE OR 12" IN DIAMETER, INCLUDING DOOR OPENINGS, IN CONCRETE WALLS & SLABS. PROVIDE 2 - #5 BARS @ 3" O.C., ON EACH SIDE OF THE OPENING EXTENDING 24" BEYOND THE CORNER OF THE OPENING & 2 - #5 BARS AT 3" O.C. BY 3'-0" LONG DIAGONAL BARS AT EACH CORNER. PLACE DIAGONAL BARS CENTERED ON CORNER @ 2" CLEAR OF CORNER. ADDITIONAL REINFORCEMENT SHALL BE PROVIDED AT EACH LAYER OF REINFORCING.
7. REINFORCING STEEL SHALL BE BENT, SPLICED, AND PLACED IN ACCORDANCE WITH THE ACI 301 (LATEST EDITION).
8. PROVIDE ADEQUATE SUPPORT BARS AND ACCESSORES TO HOLD REINFORCING BARS FIRMLY IN PLACE TO SPECIFIED COVERAGES.
9. CONTROL JOINTS SHALL BE PLACED IN A SQUARE PATTERN WITH A MAXIMUM SPACING OF 10' - 0" O.C. FOR 4" THICK SLAB, 12' - 0" O.C. FOR 5" THICK SLAB, 15' - 0" O.C. FOR 6" THICK SLAB. WHERE A SQUARE PATTERN IS NOT POSSIBLE, THE MAXIMUM LONG SIDE TO SHORT SIDE OF THE JOINT PATTERN SHALL NOT EXCEED A RATIO OF 1.5:1. CONSTRUCTION JOINTS SHALL BE LOCATED BY THE CONTRACTOR AS REQUIRED FOR CONSTRUCTION WITH A MAXIMUM OF 3,000 SQUARE FEET.
10. CAST DOWELS, WITH STD 90 DEGREE HOOK, IN FOOTINGS FOR CONCRETE PIERS AND WALLS ABOVE. DOWELS SHALL BE THE SAME SIZE AND NUMBER AS THE VERTICAL REINFORCING. (U.O.N.)
11. CONCRETE MIX DESIGNS REQUIREMENTS: - AGGREGATES SHALL CONFORM TO ASTM C33. - CONCRETE EXPOSED TO FREEZE THAW SHALL HAVE 4.5%-7.5% AIR. - WATERCEMENT RATIO 0.4 MAX. FOR FOOTINGS AND WALLS. 0.4 MAX. FOR SLABS. - NO FLY ASH IN EXPOSED SLABS. 0.25 MAX. FLY ASHCEMENT RATIO IN ALL OTHER APPLICATIONS. - WATER PROOFING ADMIXTURE ADD FOR EXTERIOR EXPOSED CONCRETE.
12. INJECTION ADHESIVE ANCHORS SHALL BE SIMPSON "SET-3G" USING STANDARD 36 KSI THREADED RODS (U.O.N.). SEE SPECIFICATIONS FOR USAGE. INSTALL ANCHORS IN STRUCTURAL CONFORMANCE WITH THE MANUFACTURER'S RECOMMENDATIONS.

CAST-IN-PLACE CONCRETE COMPRESSIVE STREGNTHS	
FOOTINGS	5000 psi
EXTERIOR FOUNDATION WALLS	5000 psi
PIERS	5000 psi
WALLS	5000 psi

REINFORCING CLEAR CONCRETE COVER	
CONCRETE ON SOIL	3"
SLABS ON GRADE	MIDHEIGHT
FORMED WALLS & STRUCTURAL SLABS EXPOSED TO EARTH OR WEATHER #6 THRU #18	2"
FORMED WALLS & STRUCTURAL SLABS EXPOSED TO EARTH OR WEATHER #5 OR SMALLER	1 1/2"
FORMED WALLS & STRUCTURAL SLABS NOT EXPOSED TO EARTH OR WEATHER #11 AND SMALLER	3/4"
BEAMS AND COLUMNS (COVER TO STIRRUPS OR TIES)	1 1/2"

CONC. REINFORCING BAR LAP SPLICE SCHEDULE

BAR SIZE	f'c = 3000 psi CLASS "B"	f'c = 4000 psi CLASS "B"	f'c = 5000 psi CLASS "B"
#3	22"	20"	18"
#4	30"	26"	22"
#5	36"	32"	28"
#6	44"	38"	34"
#7	64"	54"	50"
#8	72"	62"	56"
#9	82"	70"	64"
#10	92"	80"	70"
#11	102"	88"	78"

BAR LAP SCHEDULE NOTES:

A. REINFORCING BAR LAP SPLICE SCHEDULE APPLIES TO UNCOATED, GRADE 60 REINFORCING BAR NORMAL WEIGHT CONCRETE.
B. PROVIDE CLASS "B" LAP UNLESS OTHERWISE NOTED.
C. FOR EPOXY COATED BAR, MULTIPLY THE NOTED LENGTHS BY 1.5.
D. FOR LIGHT WEIGHT CONCRETE, MULTIPLY THE NOTED LENGTHS BY 1.3.
E. MAXIMUM SPACING OF BARS BEING LAPPED IS ONE FIFTH THE LAP SPLICE LENGTH, NOT TO EXCEED 8".
F. TOP BARS ARE HORIZONTAL BARS WITH MORE THAN 12" OF FRESH CONCRETE PLACED BELOW HORIZONTAL REINFORCEMENT FOR TOP BARS, MULTIPLY THE NOTED LENGTHS BY 1.3.

BID DOCUMENTS

Revisions: | Date:

CONSULTANTS

IRRIGATION: **WATER IN MOTION, INC.** — 175 James Avenue North, Minneapolis, MN 55405, 952.229.1911 — **TIMOTHY MALOOLY**

GEOTECHNICAL: **TERRACON** — 611 Lunken Park Drive, Cincinnati, Ohio 45226, 513.612.9020 — **JEFF DUNLAP, PE**

COST ESTIMATING: **OCMI** — 2100 North Greenville Ave. Richardson, Texas 75082 469.431.0571 — **KYLE VEATER**

ARCHITECT/ENGINEER OF RECORD

ANDERSON
13605 1st Ave. N. #100 Plymouth, MN 55441
P 763.412.4000 | F 763.412.4090 | ae-mn.com
Anderson Engineering of Minnesota, LLC | Proj # 18125

STAMP: STATE OF OHIO — ADAM ADAMS 77076 — REGISTERED PROFESSIONAL ENGINEER — 2/5/2026

Office of Design and Construction Services

VA U.S. Department of Veterans Affairs

Drawing Title: NOTE SHEET

Phase: BID DOCUMENTS

Approved:

Project Title: DAYTON NATIONAL CEMETERY GRAVESITE EXPANSION

Location: 4400 W THIRD ST, DAYTON, OH 45428

Issue Date: FEBRUARY 5, 2026 | Checked: SV | Drawn: DW

Project Number: 810-CM3-033

Building Number: --

Drawing Number: S-001

152 of 160

VA FORM 08 - 6231

C:\Users\dwentland\Documents\18125_S_RVT23_dwentlandGTX8W.rvt

1/28/2026 2:26:15 PM

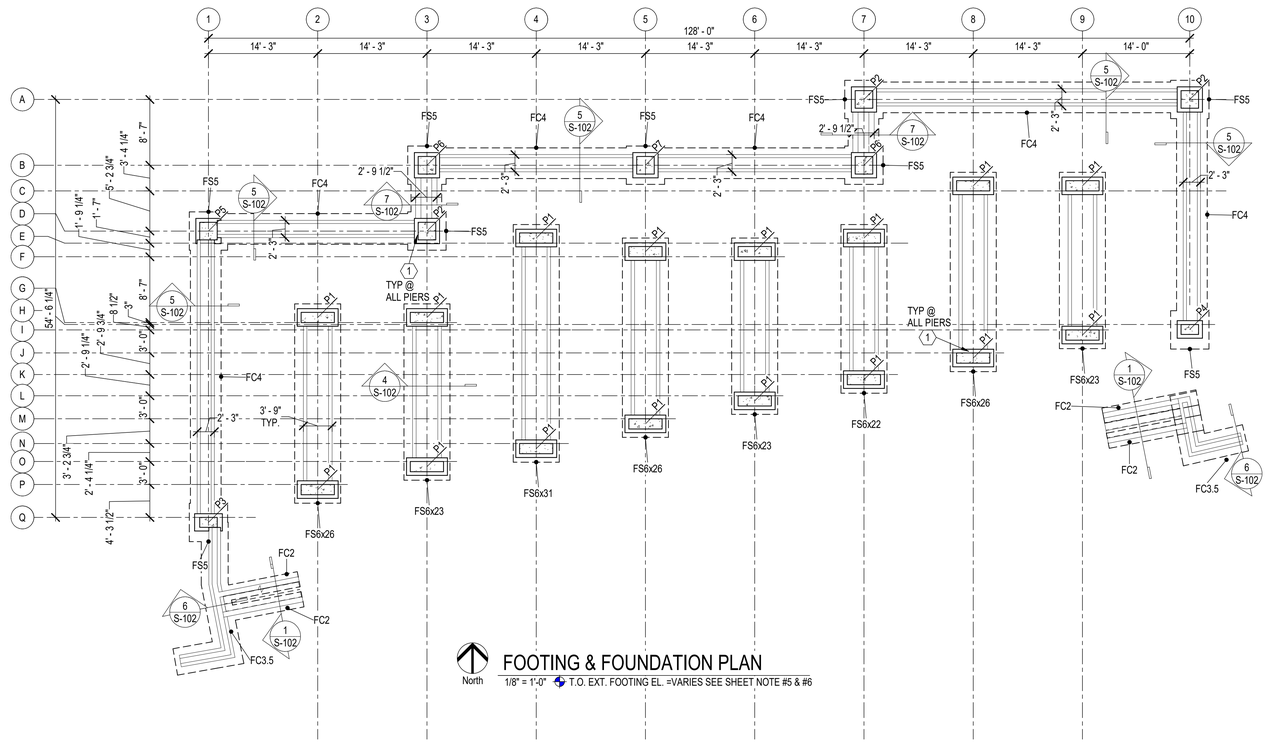

FOOTING & FOUNDATION PLAN

1/8" = 1'-0" T.O. EXT. FOOTING EL. =VARIES SEE SHEET NOTE #5 & #6

Schedule - Footings

MARK	WIDTH	DEPTH	REINFORCING		COMMENTS
			TRANSVERSE	LONGITUDINAL	
FC2	2'-0" CONT.	1'-0"	#5 @ 1'-0" O.C.	2 - #5	
FC3.5	3'-6" CONT.	1'-0"	#5 @ 1'-0" O.C.	4 - #5	RIENF.@ TOP & BOT.
FC4	4'-0" CONT.	1'-0"	#5 @ 1'-0" O.C.	4 - #5	
FS5	5'-0" x 5'-0"	1'-0"	7 - #5	7 - #5	
FS6x22	6'-0" x 22'-0"	1'-0"	#5 @ 11" O.C.	8 - #5	
FS6x23	6'-0" x 23'-0"	1'-0"	#5 @ 11" O.C.	8 - #5	
FS6x26	6'-0" x 26'-0"	1'-0"	#5 @ 11" O.C.	8 - #5	
FS6x31	6'-0" x 31'-0"	1'-0"	#5 @ 11" O.C.	8 - #5	

Schedule Notes - Pier

MARK	PIER SIZE	COMMENTS
P1	2'-3 1/2"x5'-4"	S.D. 8/S-102
P2	3'-3 1/2"x3'-3 1/2"	S.D. 8/S-102
P3	2'-3 1/2x3'-3 1/2"	S.D. 8/S-102
P4	2'-3 1/2x3'-3 1/2"	S.D. 8/S-102
P5	3'-3 1/2"x3'-3 1/2"	S.D. 8/S-102
P6	2'-3 1/2x3'-3 1/2"	S.D. 8/S-102
P7	3'-3 1/2"x3'-3 1/2"	S.D. 8/S-102

SHEET NOTES:

1. VERIFY ALL DIMENSIONS WITH LANDSCAPE ARCHITECTURAL DRAWINGS.
2. SEE SHEET S-001 FOR GENERAL STRUCTURAL NOTES.
3. P# = PIER MARK - SEE PIER SCHEDULE ON THIS SHEET.
4. FC/S/T# = FOOTING MARK - SEE FOOTING SCHEDULE ON THIS SHEET.
5. TOP OF FOOTING ELEVATION IS INDICATED AS 2'-8" BELOW THE TOP OF MASONRY LEDGE. SEE LA DRAWINGS FOR CONFIRMATION OF FINAL ELEVATIONS. THE MINIMUM TOP OF FOOTING ELEVATION SHALL BE 2'-8" BELOW FINISHED GRADE. NOTIFY ENGINEER IMMEDIATELY IF SITE CONDITIONS DO NOT ALLOW THIS REQUIREMENT TO BE MET.
6. STEP WALL FOOTING EVERY 1'-0" OF GRADE CHANGE S.D. 3/S-102.

KEY NOTES:

1. L6X6X5/16 ANGLE @ EACH PIER FACE WITH NICHE ABUTMENT. FASTEN WITH (2) 1/2" DIA. SIMPSON "TITEN HD" SCREW ANCHORS, 3 1/4" MIN EMBED. SEE LANDSCAPE DETAILS 3/LS300 & 10/LS503.

BID DOCUMENTS

Revisions: Date:

CONSULTANTS

IRRIGATION: WATER IN MOTION, INC. — 175 James Avenue North, Minneapolis, MN 55405, 952.229.1911 — TIMOTHY MALOOLY
GEOTECHNICAL: TERRACON — 611 Lunken Park Drive, Cincinnati, Ohio 45226, 513.612.9020 — JEFF DUNLAP, PE
COST ESTIMATING: OCMI — 2100 North Greenville Ave. Richardson, Texas 75082 469.431.0571 — KYLE VEATER

ARCHITECT/ENGINEER OF RECORD

ANDERSON
13605 1st Ave. N. #100 Plymouth, MN 55441
P 763.412.4000 | F 763.412.4090 | ae-mn.com
Anderson Engineering of Minnesota, LLC | Proj # 18125

STAMP: STATE OF OHIO — ADAM ADAMS 77078 — REGISTERED PROFESSIONAL ENGINEER — 2/5/2026

Office of Design and Construction Services

VA U.S. Department of Veterans Affairs

Drawing Title: COLUMBARIUM FOUNDATION PLAN

Approved:

Phase: BID DOCUMENTS

Project Title: DAYTON NATIONAL CEMETERY GRAVESITE EXPANSION

Location: 4400 W THIRD ST, DAYTON, OH 45428

Issue Date: FEBRUARY 5, 2026 | Checked: SV | Drawn: DW

Project Number: 810-CM3-033

Building Number: --

Drawing Number: S-101

153 of 160

C:\Users\dwentland\Documents\18125_S_RVT22_dwentlandSTX3NV.rvt

1/28/2026 2:26:16 PM

VA FORM 08 - 6231

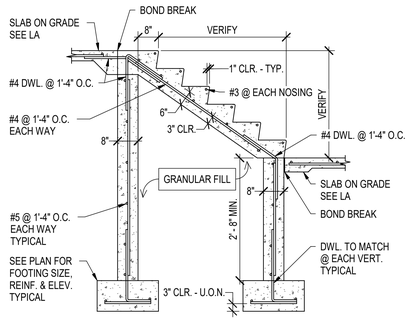

1 S-102 STAIR DETAIL
1/2" = 1'-0"

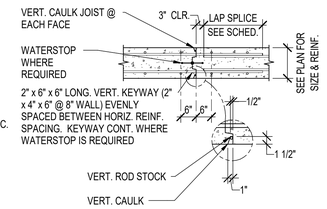

NOTE:
1. REFER TO LA PLANS FOR FINAL LOCATIONS OF WALL CONSTRUCTION JOINTS. NOTIFY LANDSCAPE ARCHITECT IF JOINTS EXCEED CRITERIA BELOW.
2. JOINT MAXIMUM SPACING = 20'-0" FOR WALLS 3'-0" OR GREATER.
3. JOINT MAXIMUM SPACING = 30'-0" FOR WALLS 2'-0" - 3'-0"
4. JOINT MAXIMUM SPACING = 45'-0" FOR WALLS 2'-0" AND SMALLER

2 S-102 WALL CONSTRUCTION JOINT DETAIL
1/2" = 1'-0"

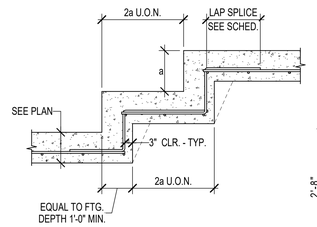

NOTES:
1. SEE PLAN FOR FOOTING SIZE AND REINFORCING.
2. SLOPED OR STEPPED FOOTINGS SHALL BE CAST AS A UNIT.
3. STEPPED FOOTING LINES SHOWN ON PLAN ARE @ BOTTOM OF FOOTING.

3 S-102 STEPPED FOOTING DETAIL
1/2" = 1'-0"

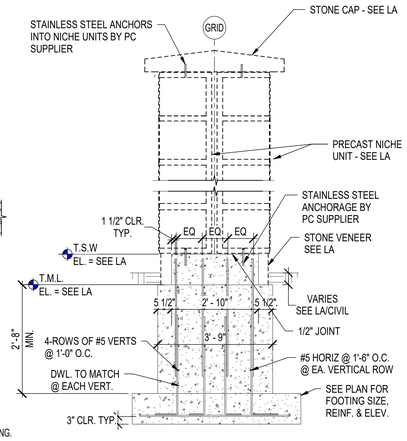

4 S-102 EXTERIOR WALL DETAIL
1/2" = 1'-0"

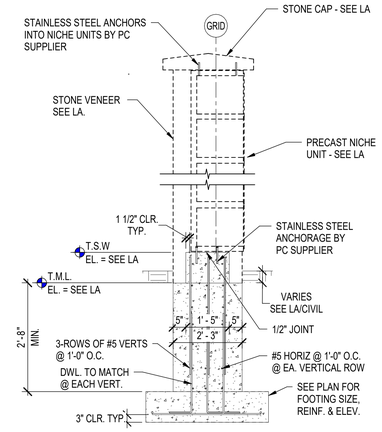

5 S-102 EXTERIOR WALL DETAIL
1/2" = 1'-0"

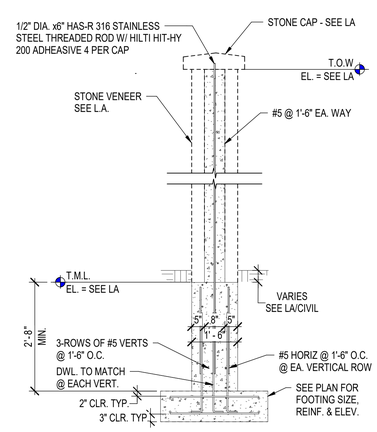

6 S-102 EXTERIOR WALL DETAIL
1/2" = 1'-0"

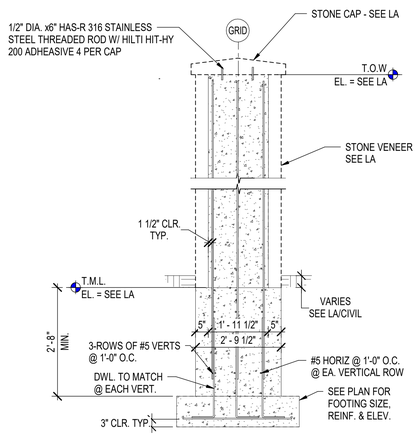

7 S-102 EXTERIOR WALL DETAIL
1/2" = 1'-0"

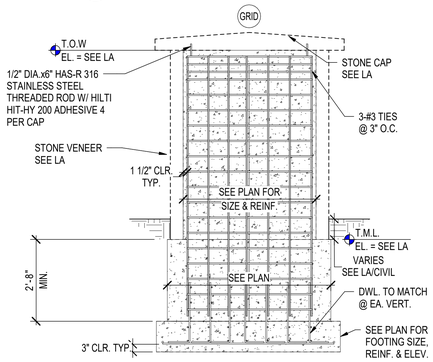

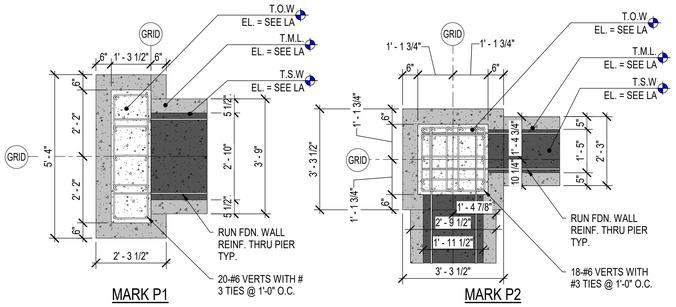

8 S-102 EXTERIOR PIER DETAIL
1/2" = 1'-0"

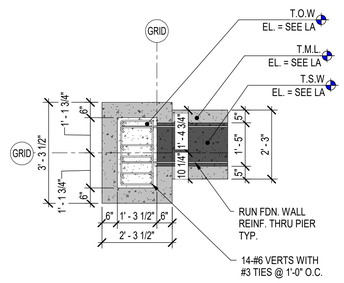

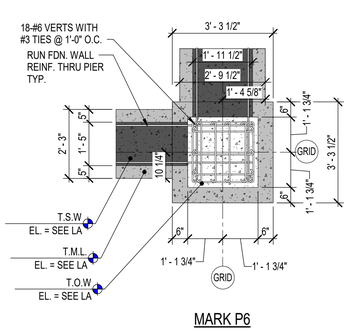

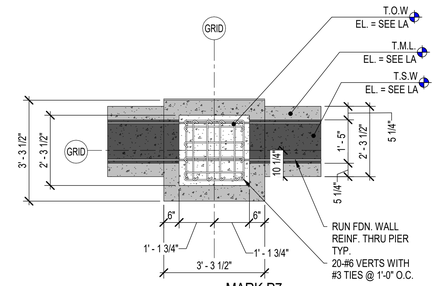

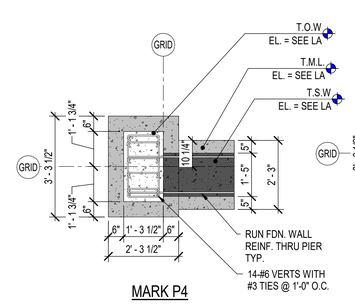

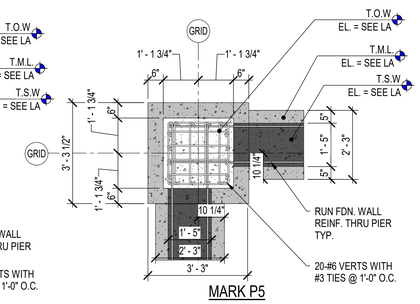

BID DOCUMENTS

Revisions:	Date:

CONSULTANTS

IRRIGATION	GEOTECHNICAL	COST ESTIMATING
WATER IN MOTION, INC.	**TERRACON**	**OCMI**
175 James Avenue North Minneapolis, MN 55405 952.229.1911	611 Lunken Park Drive Cincinnati, Ohio 45226 513.612.9020	2100 North Greenville Ave. Richardson, Texas 75082 469.431.0571
TIMOTHY MALOOLY	**JEFF DUNLAP, PE**	**KYLE VEATER**

ARCHITECT/ENGINEER OF RECORD

ANDERSON

13605 1st Ave. N. #100 Plymouth, MN 55441
P 763.412.4000 | F 763.412.4090 | ae-mn.com
Anderson Engineering of Minnesota, LLC | Proj # 18125

STAMP

STATE OF OHIO ADAM ADAMS 77078 REGISTERED PROFESSIONAL ENGINEER
2/5/2026

Office of Design and Construction Services

VA U.S. Department of Veterans Affairs

Drawing Title	Phase	Project Title	Project Number
FOOTING & FOUNDATION DETAILS	BID DOCUMENTS	DAYTON NATIONAL CEMETERY GRAVESITE EXPANSION	810-CM3-033
Approved:		Location: 4400 W THIRD ST, DAYTON, OH 45428	Building Number: --
		Issue Date: FEBRUARY 5, 2026 / Checked: SV / Drawn: DW	Drawing Number: S-102
			154 of 160

VA FORM 08 - 6231

C:\Users\dwentland\Documents\18125_S_RVT23_dwentlandSTX8W.rvt

1/28/2026 2:26:17 PM

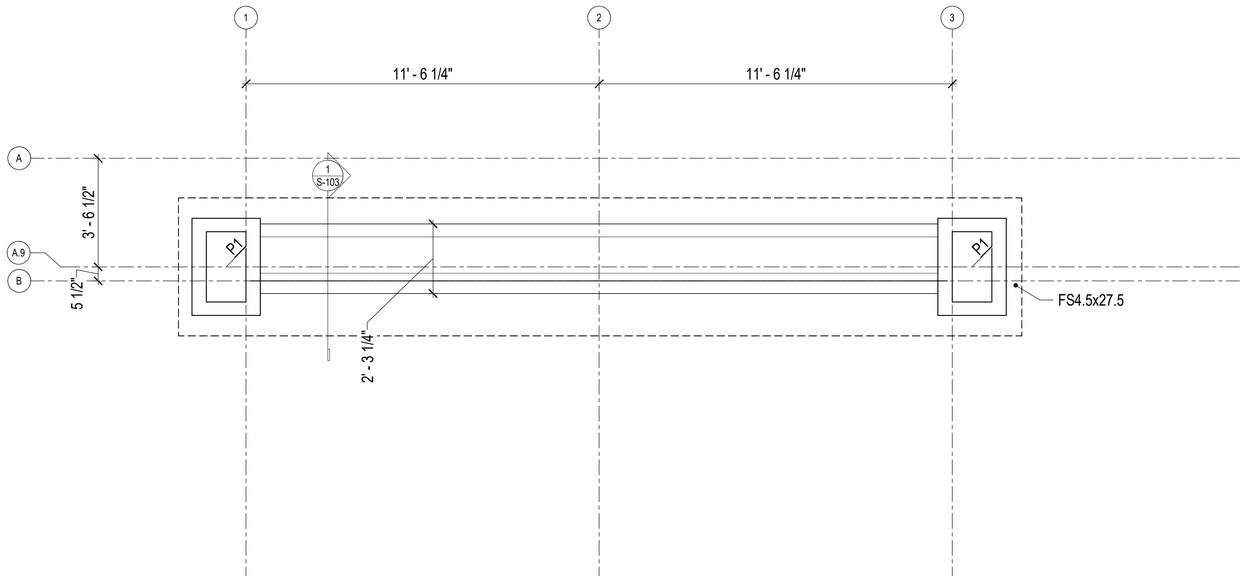

FOOTING & FOUNDATION PLAN

North

1/2" = 1'-0" T.O. EXT. FOOTING EL. = VARIES SEE SHEET NOTE #5

Schedule - Footings					
MARK	WIDTH	DEPTH	REINFORCING		COMMENTS
			TRANSVERSE	LONGITUDINAL	
FS4.5x27.5	4'-6" x 27'-6"	1'-0"	#5 @ 1'-0" O.C.	7 - #5	REINF. @ TOP & BOT.

Schedule Notes - Pier		
MARK	PIER SIZE	COMMENTS
P1	2'-2 3/4"X3'-2"	S.D. 2/S-103

SHEET NOTES:

1. VERIFY ALL DIMENSIONS WITH LANDSCAPE ARCHITECTURAL DRAWINGS.
2. SEE SHEET S-101 FOR GENERAL STRUCTURAL NOTES.
3. P# = PIER MARK - SEE PIER SCHEDULE ON THIS SHEET.
4. FC/S/T# = FOOTING MARK - SEE FOOTING SCHEDULE ON THIS SHEET.
5. TOP OF FOOTING ELEVATION IS INDICATED AS 2'-8" BELOW THE TOP OF MASONRY LEDGE. SEE LA DRAWINGS FOR CONFIRMATION OF FINAL ELEVATIONS. THE MINIMUM TOP OF FOOTING ELEVATION SHALL BE 2'-8" BELOW FINISHED GRADE. NOTIFY ENGINEER IMMEDIATELY IF SITE CONDITIONS DO NOT ALLOW THIS REQUIREMENT TO BE MET.

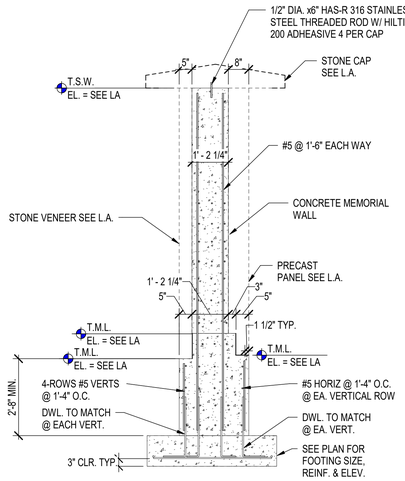

1 S-103 FOUNDATION WALL DETAIL

1/2" = 1'-0"

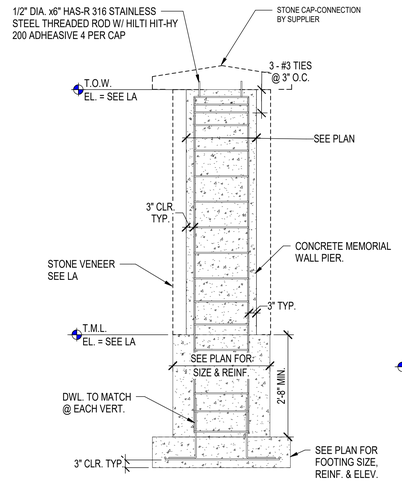

2 S-103 EXTERIOR PIER DETAIL

1/2" = 1'-0"

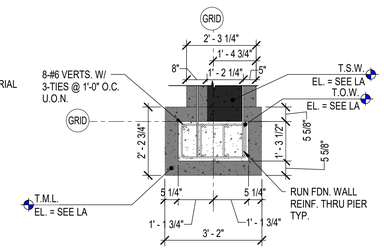

MARK P1

BID DOCUMENTS

CONSULTANTS		
IRRIGATION	GEOTECHNICAL	COST ESTIMATING
WATER IN MOTION, INC.	**TERRACON**	**OCMI**
175 James Avenue North Minneapolis, MN 55405 952.229.1911	611 Lunken Park Drive Cincinnati, Ohio 45226 513.612.9020	2100 North Greenville Ave. Richardson, Texas 75082 469.431.0571
TIMOTHY MALOOLY	**JEFF DUNLAP, PE**	**KYLE VEATER**

Revisions: Date:

ARCHITECT/ENGINEER OF RECORD

ANDERSON

13605 1st Ave. N. #100 Plymouth, MN 55441
P 763.412.4000 | F 763.412.4090 | ae-mn.com
Anderson Engineering of Minnesota, LLC | Proj # 18125

STAMP

STATE OF OHIO ADAM ADAMS 77078 REGISTERED PROFESSIONAL ENGINEER
2/5/2026

Office of Design and Construction Services

VA U.S. Department of Veterans Affairs

Drawing Title	Phase	Project Title	Project Number
MEMORIAL WALL FOUNDATION PLAN	BID DOCUMENTS	DAYTON NATIONAL CEMETERY GRAVESITE EXPANSION	810-CM3-033
Approved:		Location: 4400 W THIRD ST, DAYTON, OH 45428	Building Number: --
		Issue Date: FEBRUARY 5, 2026 / Checked: SV / Drawn: DW	Drawing Number: S-103 — 155 of 160

C:\Users\dwentland\Documents\18125 DNC MEMORIAL WALL_S_RVT23_dwentland5TX8WI.rvt

1/28/2026 11:44:34 AM

VA FORM 08 - 6231

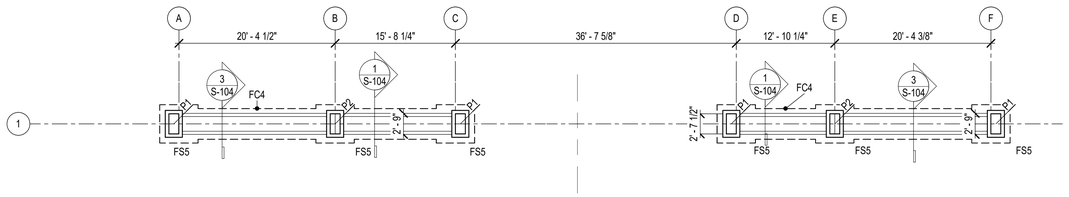

North

ENTRANCE WALL FOUNDATION PLAN

1/8" = 1'-0" T.O. EXT. FOOTING EL. =VARIES SEE SHEET NOTE #5

SHEET NOTES:

1. VERIFY ALL DIMENSIONS WITH ARCHITECTURAL DRAWINGS.
2. SEE SHEET S-101 FOR GENERAL STRUCTURAL NOTES.
3. P# = PIER MARK - SEE PIER SCHEDULE ON THIS SHEET.
4. FC/S/T# = FOOTING MARK - SEE FOOTING SCHEDULE ON THIS SHEET.
5. TOP OF FOOTING ELEVATION IS INDICATED AS 2'-8" BELOW THE TOP OF MASONRY LEDGE. SEE LA DRAWINGS FOR CONFIRMATION OF FINAL ELEVATIONS. THE MINIMUM TOP OF FOOTING ELEVATION SHALL BE 2'-8" BELOW FINISHED GRADE. NOTIFY ENGINEER IMMEDIATELY IF SITE CONDITIONS DO NOT ALLOW THIS REQUIREMENT TO BE MET.

Schedule Notes - Pier

MARK	PIER SIZE	COMMENTS
P1	2'-3 1/2"x3'-7 1/2"	S.D. 2/S-104
P2	2'-3 1/2"x3'-7 1/2"	S.D. 2/S-104

Schedule - Footings

MARK	WIDTH	DEPTH	REINFORCING		COMMENTS
			TRANSVERSE	LONGITUDINAL	
FC4	4'-0" CONT.	1'-0"	#5 @ 1'-0" O.C.	4 - #5	REINF. @ TOP & BOT.
FS5	5'-0" x 5'-0"	1'-0"	7 - #5	7 - #5	REINF. @ TOP & BOT.

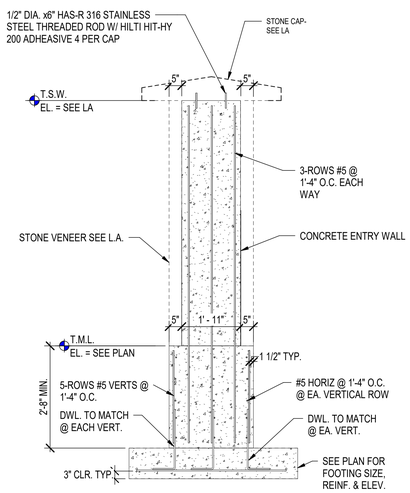

1 S-104 FOUNDATION WALL DETAIL

1/2" = 1'-0"

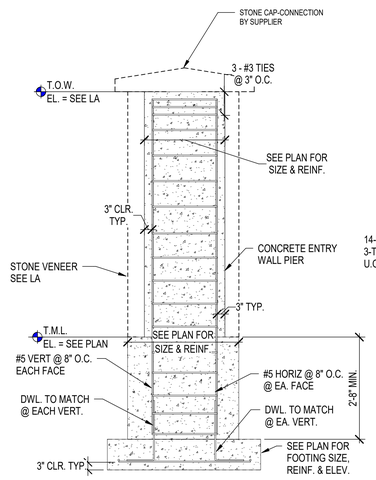

2 S-104 EXTERIOR PIER DETAIL

1/2" = 1'-0"

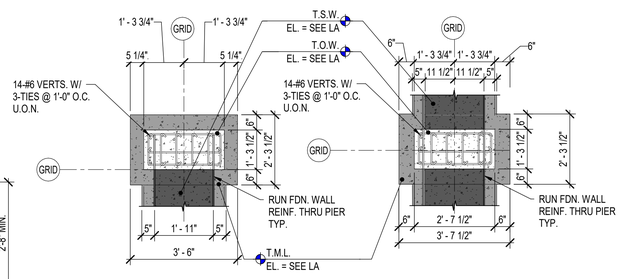

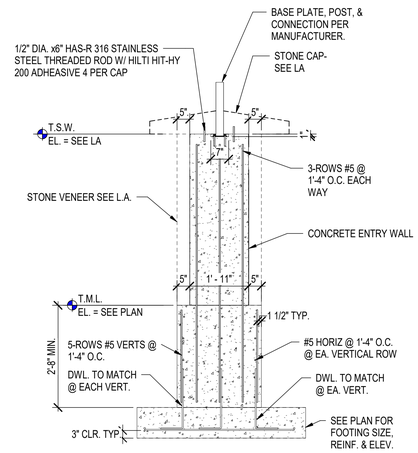

3 S-104 FOUNDATION WALL DETAIL

1/2" = 1'-0"

BID DOCUMENTS

Revisions:	Date:

CONSULTANTS

IRRIGATION	GEOTECHNICAL	COST ESTIMATING
WATER IN MOTION, INC.	**TERRACON**	**OCMI**
175 James Avenue North Minneapolis, MN 55405 952.229.1911	611 Lunken Park Drive Cincinnati, Ohio 45226 513.612.9020	2100 North Greenville Ave. Richardson, Texas 75082 469.431.0571
TIMOTHY MALOOLY	**JEFF DUNLAP, PE**	**KYLE VEATER**

ARCHITECT/ENGINEER OF RECORD

ANDERSON

13605 1st Ave. N. #100 Plymouth, MN 55441
P 763.412.4000 | F 763.412.4090 | ae-mn.com
Anderson Engineering of Minnesota, LLC | Proj # 18125

STAMP

STATE OF OHIO ADAM ADAMS 77076 REGISTERED PROFESSIONAL ENGINEER
2/5/2026

Office of Design and Construction Services

VA U.S. Department of Veterans Affairs

Drawing Title: ENTRY WALL FOUNDATION PLAN

Approved:

Phase: BID DOCUMENTS

Project Title: DAYTON NATIONAL CEMETERY GRAVESITE EXPANSION

Location: 4400 W THIRD ST, DAYTON, OH 45428

Issue Date: FEBRUARY 5, 2026 | Checked: SV | Drawn: DW

Project Number: 810-CM3-033

Building Number: --

Drawing Number: S-104

156 of 160

VA FORM 08 - 6231

C:\Users\dwentland\Documents\18125 ENTRANCE WALL_S_RVT23_dwentlandGT36W.rvt

1/28/2026 11:45:29 AM

Electrical Abbreviations

1P	1 Pole (2P, 3P, 4P, ETC.)
A, Amp	Ampere
AC	Above Counter
ACLG	Above Ceiling
ADO	Automatic Door Opener
AF	Amp Frame
AFF	Above Finished Floor
AFG	Above Finished Grade
AFI	Arc Fault Circuit Interrupter
AHU	Air Handling Unit
AL	Aluminum
ALT	Alternate
AMP	Ampere
AMPL	Amplifier
ANNUN	Annunciator
APPROX	Approximately
AQ-STAT	Aquastat
ARCH	Architect, Architectural
AS	Amp Switch
AT	Amp Trip
ATS	Automatic Transfer Switch
AUTO	Automatic
AUX	Auxiliary
AV	Audio Visual
AWG	American Wire Gauge
BATT	Battery
BD	Board
BLDG	Building
BMS	Building Management System
C	Conduit
CAB	Cabinet
CAT	Catalog
CATV	Cable Television
CB	Circuit Breaker
CCTV	Closed Circuit Television
CKT	Circuit
CLG	Ceiling
COMB	Combination
CMPR	Compressor
CONN	Connection
CONST	Construction
CONT	Continuation Or Continuous
CONTR	Contractor
CONV	Convector
CP	Circulating Pump
CRT	Cathode-Ray Tube
CT	Current Transformer
CTR	Center
CU	Copper
DCP	Domestic Water Circulating Pump
DEPT	Department
DET	Detail
DIA	Diameter
DISC	Disconnect
DIST	Distribution
DN	Down
DPR	Damper
DS	Safety Disconnect Switch
DT	Double Throw
DWG	Drawing
EC	Electrical Contractor
ELEC	Electric, Electrical
ELEV	Elevator
ELU	Emergency Lighting Unit
EM	Emergency
EMS	Energy Management System
EMT	Electrical Metallic Tubing
EP	Electric Pneumatic
EQUIP	Equipment
EWC	Electric Water Cooler
EXIST	Existing
EXH	Exhaust
EXP	Explosion Proof
FA	Fire Alarm
FABP	Fire Alarm Booster Power Supply Panel
FACP	Fire Alarm Control Panel
FCU	Fan Coil Unit
FIXT	Fixture
FLR	Floor
FLUOR	Fluorescent
FU	Fuse
FUDS	Fused Safety Disconnect Switch
GA	Gauge
GAL	Gallon
GALV	Galvanized
GC	General Contractor
GEN	Generator
GFI	Ground Fault Circuit Interrupter
GFP	Ground Fault Protector
GND	Ground
GRS	Galvanized Rigid Steel (Conduit)
GYP BD	Gypsum Board
HOA	Hands-Off-Automatic Switch
HORIZ	Horizontal
HP	Horsepower
HPF	High Power Factor
HT	Height
HTG	Heating
HTR	Heater
HV	High Voltage
HVAC	Heating, Ventilating And Air Conditioning
IC	Interrupting Capacity
IG	Isolated Ground
IMC	Intermediate Metal Conduit
INCAND	Incandescent
IR	Infrared
I/W	Interlock With
J-BOX	Junction Box
KV	Kilovolt
KVA	Kilovolt-Ampere
KVAR	Kilovolt-Ampere Reactive
KW	Kilowatt
KWH	Kilowatt Hour
LOC	Locate Or Location
LT	Light
LTG	Lighting
LTNG	Lightning
LV	Low Voltage
MAX	Maximum
MAG.S	Magnetic Starter
M/C	Momentary Contact
MC	Mechanical Contractor
MCB	Main Circuit Breaker
MCC	Motor Control Center
MDC	Main Distribution Center
MDP	Main Distribution Panel
MFR	Manufacturer
MFS	Main Fused Disconnect Switch
MH	Manhole
MIC	Microphone
MIN	Minimum
MISC	Miscellaneous
MLO	Main Lugs Only
MMS	Manual Motor Starter
MOA	Multioutlet Assembly
MSP	Motor Starter Panelboard
MSBD	Main Switchboard
MSS	Motor Starter Switch
MT	Mount
MT.C	Empty Conduit
MTS	Manual Transfer Switch
MTR	Motor, Motorized
N.C.	Normally Closed
NEC	National Electrical Code
NEMA	National Electrical Manufacturer's Association
NFDS	Non-Fused Safety Disconnect Switch
NIC	Not In Contract
NL	Night Light
N.O.	Normally Open
NPF	Normal Power Factor
NTS	Not To Scale
OC	On Center
OH	Overhead
OL	Overloads
PA	Public Address
PB	Pull Box Or Pushbutton
PE	Pneumatic Electric
PED	Pedestal
PF	Power Factor
PH	Phase
PIV	Post Indicating Valve
PNL	Panel
PP	Power Pole
PR	Pair
PRI	Primary
PROJ	Projection
PRV	Power Roof Ventilator
PT	Potential Transformer
PVC	Polyvinyl Chloride (Conduit)
PWR	Power
QUAN	Quantity
RCPT	Receptacle
REQD	Required
RM	Room
RSC	Rigid Steel Conduit
RTU	Roof Top Unit
SC	Surface Conduit
SEC	Secondary
SHT	Sheet
SIM	Similar
SLD	Single-Line Diagram
S/N	Solid Neutral
SPEC	Specification
SPKR	Speaker
SP	Spare
SPP	Single-Point Power
SR	Surface Raceway
SS	Stainless Steel
SSW	Selector Switch
S/S	Stop/Start Pushbuttons
STA	Station
STD	Standard
SURF	Surface Mounted
SW	Switch
SWBD	Switchboard
SYM	Symmetrical
SYS	System
TEL	Telephone
TERM	Terminal
TL	Twist Lock
TR	Tamper Resistant
T-STAT	Thermostat
TTC	Telephone Terminal Cabinet
TV	Television
TVTC	Television Terminal Cabinet
TYP	Typical
UC	Under Counter
UE	Underground Electrical
UG	Underground
UH	Unit Heater
UT	Underground Telephone
UTIL	Utility
UV	Ultraviolet
V	Volt
VA	Volt-Amperes
VDT	Video Display Terminal
VERT	Vertical
VFD	Variable Frequency Drive
VOL	Volume
W	Watt
W/	With
WG	Wire Guard
WH	Water Heater
W/O	Without
WP	Weatherproof
XFMR	Transformer
XFR	Transfer
∠	Angle
@	At
▲	Delta
'	Feet
"	Inches
#	Number
Ø	Phase
C	Center Line
P	Plate

Electrical Symbol Legend

Lighting Symbols

- Lighting Fixtures, Typical, Rectangular (Various Symbols) — Filled circles indicate recessed. Open circles indicate surface-mounted. Diagonal line indicates lensed. Outer dots indicate suspended.
- Lighting Fixtures, Typical, Round (Various Symbols) — Center dot indicates pendant. Diagonal line indicates lensed. Chevron indicates wall wash.
- Wall-mounted fixtures, Typical (Various Symbols)
- Strip Fixture
- Directional Light, Track Light, Flood Light
- Linear Light, Tape Light
- Emergency Lighting Unit, Ceiling-Mounted, Integral Battery
- Emergency Lighting Unit, Ceiling-Mounted, Remote Battery
- Emergency Lighting Unit, Wall-Mounted, Integral Battery
- Emergency Lighting Unit, Wall-Mounted, Remote Battery
- Exit Light, Ceiling-Mounted. Shading and arrows indicate faces and directional chevrons.
- Exit Light, Wall-Mounted. Shading and arrows indicate faces and directional chevrons.
- Exit/ELU Combo
- Pole/Area Lights
- Post-Top Area Light
- Bollard Light
- Diagonal hatch indicates light on a critical circuit.
- Solid hatch indicates light on an emergency or life safety circuit.
- $ Single-Pole Switch
- $ Two-Pole Switch
- $ Three-Pole Switch

Switch Modifiers:

3: 3-Way	OS: Occupancy Sensor
4: 4-Way	VS: Vacancy Sensor
K: Keyed	AC: Above-Counter
D: Dimming	LV: Low-Voltage
T: Timer	M: Motor-Rated

- Lighting Contactor
- LC Lighting Control Panel
- OS Occupancy Sensor
- DL Daylight Harvesting Sensor

Lighting Tags

5 / A1a

- Top Value: Fixture Type ID (Underlined)
- Bottom Value, Lowercase Letter: Switch ID
- Bottom Value, Number(s): Circuit Number
- Bottom Value, Uppercase Letter(s): Panel ID

Absence of a switch designation on a lighting fixture indicates fixture is controlled by the only switch in the space. An "x" in place of the switch designation indicates unswitched.

$a — Switch ID indicated by a lowercase letter. Switch IDs are unique per space. A switch with an ID "a" controls all devices within the space in which it is located tagged with "a". A switch without a tagged ID controls all lighting fixtures within a space. ID tags may be used on control devices other than switches, such as occupancy sensors or contactors.

Grounding and Lightning Protection Symbols

- Ground Rod
- Ground Rod with Test Well
- Static Ground Receptacle
- Lightning Protection Air Terminal
- Lightning Protection Conductor Splice

Power Symbols

Wall / Ceiling / Floor

- Simplex Receptacle
- Duplex Receptacle
- Quadruplex Receptacle
- Special Receptacle, Type as Indicated

Receptacle Modifiers:
- ##": Height AFF OC
- AC: Above Counter
- GFI: Ground-Fault Circuit Interrupter
- WP: Weatherproof In-Use Cover

- Half shading indicates split (typically switched)
- Outside shading indicates emergency circuit
- Center shading indicates isolated ground
- $ Single-Pole Switch
- $ Two-Pole Switch
- $ Three-Pole Switch

Switch Modifiers:
- K: Keyed
- T: Timer
- AC: Above-Counter
- M: Motor-Rated

- Multioutlet Assembly — Filled squares indicate 120V outlet. Open squares indicate with USB
- Cord Reel, Device Varies
- Drop Cord, Device Varies
- J Junction Box
- FT Floor Box, see schedule for type
- Emergency Power Off
- DO Door Opener Push Plate
- M Power Meter
- Safety Switch, Fused
- Safety Switch, Unfused
- Motor Starter
- Combination Starter/Disconnect
- Contactor

Power Device and Equipment Tags

C1a / L1 / L2 / L3 — Electrical DeviceTags: Uppercase letter(s) indicates Panel ID and circuit number. Lowercase letter indicates designation of controlling switch (where applicable).

XX-1 — Equipment Tags: Equipment ID is indicated by an underlined tag adjacent to the equipment. See the equipment connection schedule for description, electrical requirements, and panel and circuit number. Symbols/graphic appearance of equipment varies.

Wiring

- Solid, arced lines connecting equipment, devices, or fixtures indicate unswitched power circuiting. Wires are only intended to indicate to what circuit devices are connected. Actual connections, circuit routing, installtion, junction boxes, etc. shall be field-determined by the contractor.
- Dashed, arced lines connecting equipment, devices, or fixtures indicate switched power.
- Home run to branch circuit panelboard. The equipment name and circuit number(s) are indicated, separated by a hyphen. Homeruns are only intended to indicate panel and circuit number. Actual homerun location shall be field-determined by the contractor.

Power Distribution Equipment

SB1(S) — MDP1A — HP1A(B) — LP1A(C)

Hatched fill indicates distribution panel or switchboard.
Solid fill indicates branch panel or load center.
Dashed box indicates code-required clearance (width and depth).
Door indicates front of recessed panel.

Panelboards are assigned an abbreviated indicator (or Panel ID) for use with circuit numbers. Panel ID is listed within the panel schedule and in the panel abbreviation schedule.

Equipment is tagged with Panel Name and with Panel ID in parentheses. Panel ID is intended as a design documentation aid only. Do not include Panel ID in field-applied circuit directories or labels.

Devices and fixtures are tagged with Panel ID and circuit number. For example, a device tagged with "A1" indicates the device is circuited to panel designated "A," circuit number 1. The panel schedule circuit number contains both the panel abbreviation and the circuit number.

T1 — Transformer: Typically transformer names begin with or contain the letter "T". See Single-Line Diagram for description and requirements.

Telecom Symbols

Wall / Ceiling / Floor

- Data Outlet
- Telephone Outlet
- Data/Telephone Outlet

Outlet Modifiers:
- ##": Height AFF OC
- AC: Above Counter

- Wireless Access Point
- TV Outlet

Nurse Call Symbols

- Nurse Call Corridor Light — Number of lights as indicated
- Nurse Call Device
  - B: Code Blue
  - D: Duty Station
  - E: Emergency
  - P: Patient Call
  - S: Staff
- XXXX Nurse Call Control Unit
  - NCAP: Nurse Call Annunciator Panel
  - NCHS: Nurse Call Host Controller
  - NCPA: Nurse Call Power Supply
  - NCTC: Nurse Call Terminal Cabinet
  - NCUPS: Uninterruptable Power Supply

Security Symbols

- Security Camera — PTZ: Pan/Tilt/Zoom
- CR Card Reader
- CK Card Reader with Keypad
- CC Closed Circuit TV Outlet
- DC Door Contact
- ES Electric Strike
- IC Intercom
- ML Magnetic Lock
- RQX Request to Exit Button
- REX Request to Exit Sensor
- MS Motion Detector
- XXX Security Control Unit
  - SCP: Security Control Panel
  - SPS: Security Power Supply Unit

Construction Phasing
(Typical All Symbols and Equipment)

- Existing to Remain
- Existing to Be Demolished
- New
- Existing to Be Demolished

Miscellaneous

- Area Not in Contract
- # Keynote — Callout: Top Value: Detail Number on Sheet; Bottom Value: Sheet Number of Detail
- Room 1 — Room Name and Number

Fire Alarm Symbols

- F Manual Pull Station
- F Horn, Wall
- F Horn, Ceiling
- Strobe, Wall, Candela as indicated
- Strobe, Ceiling, Candela as indicated
- Horn/Strobe, Wall, Candela as indicated
- Horn/Strobe, Ceiling, Candela as indicated
- Remote Indicator w/ Test Switch, Wall
- Remote Indicate w/ Test Switch, Ceiling
- Smoke Detector
- Heat Detector
- CO Carbon Monoxide Detector
- CO Beam Detector T: Transmitter R: Receiver
- CO Combination Detector (Up to Three)
- Duct Smoke Detector
- Smoke Damper
- DH Door Holder
- DCL Door Closer
- Fire Service Phone
- XXX Addressible Module
  - AIM: Addressible Input Module
  - AOM:Addressible Output Control Module
  - AIO: Addressible Input/Output Module
- XXXX Fire Alarm Control Unit
  - EVAC: Voice Evacuation Control Panel
  - FAA: Fire Alarm Annunciator
  - FACP: Fire Alarm Control Panel
  - FATC: Fire Alarm Terminal Cabinet
  - NACP: Notification Appliance Circuit Panel
  - FAMN: Fire Alarm Mass Notification Control Panel
- XX Supervisory or Interface Device
  - PIV: Post Indicator Valve Supervisory
  - PS: Pressure Switch
  - R: Non-Addressible Relay
  - VS: Valve Supervisory Switch
  - WF: Water Flow Switch

Electrical Sheet List

E-001	ELECTRICAL SYMBOLS, ABBREVIATIONS, GENERAL NOTES
ES101	ELECTRICAL SITE PLAN
E501	ELECTRICAL DETAILS

BID DOCUMENTS

C:\Users\awebert\Documents\18125_Dayton NCA_E_R23_awebert96546.rvt

1/29/2026 12:42:50 PM

Revisions:	Date:

CONSULTANTS

IRRIGATION	GEOTECHNICAL	COST ESTIMATING
WATER IN MOTION, INC.	**TERRACON**	**OCMI**
175 James Avenue North Minneapolis, MN 55405 952.229.1911	611 Lunken Park Drive Cincinnati, Ohio 45226 513.612.3020	2100 North Greenville Ave. Richardson, Texas 75082 469.431.0571
TIMOTHY MALOOLY	**JEFF DUNLAP, PE**	**KYLE VEATER**

ARCHITECT/ENGINEER OF RECORD

ANDERSON

13605 1st Ave. N. #100 Plymouth, MN 55441
P 763.412.4000 | F 763.412.4090 | ae-mn.com
Anderson Engineering of Minnesota, LLC | Proj # 18125

STAMP

STATE OF OHIO — WILLIAM HAAS — E-83914 — REGISTERED PROFESSIONAL ENGINEER

Office of Design and Construction Services

VA U.S. Department of Veterans Affairs

Drawing Title: ELECTRICAL SYMBOLS, ABBREVIATIONS, GENERAL NOTES	Phase: BID DOCUMENTS	Project Title: DAYTON NATIONAL CEMETERY GRAVESITE EXPANSION	Project Number: 810CM3033
Approved:			Building Number: -
		Location: 4400 W THIRD ST. DAYTON, OH 45428	Drawing Number: E-001
		Issue Date: FEBRUARY 5, 2026 / Checked: WH / Drawn: ATW	157 of 160

VA FORM 08 - 6231

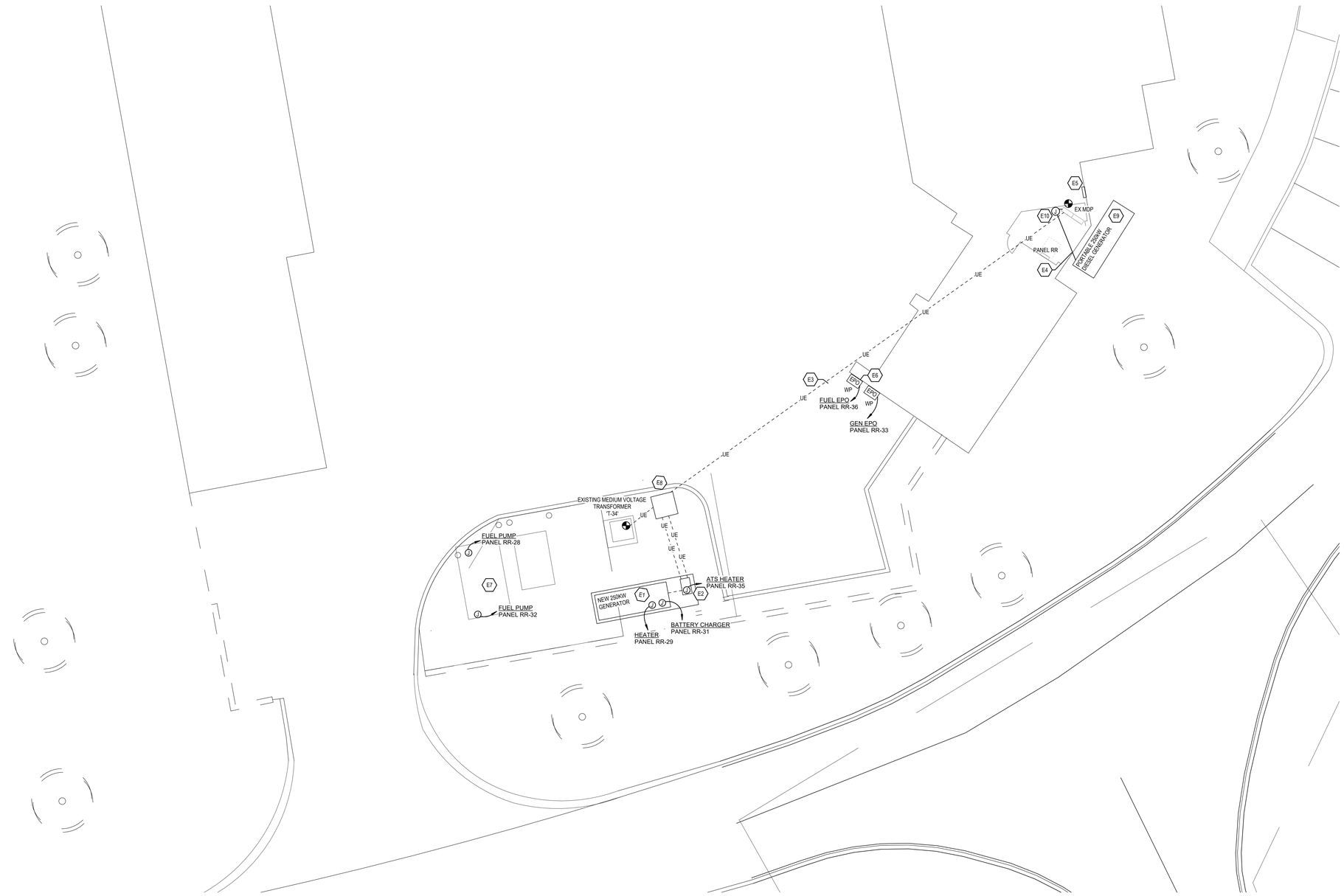

1 ELECTRICAL SITE PLAN

ELECTRICAL GENERAL NOTES

A. UNDERGROUND DUCTS AND CONDUITS SHALL BE ENCASED IN CONCRETE. DIRECT BURIAL CONDUIT MAY BE USED FOR OUTDOOR LIGHTING AND POWER BRANCH CIRCUITS 600V AND LESS.

B. UTILITIES SHOWN ARE INDICATED SCHEMATICALLY. CONTRACTORS SHALL VERIFY ALL DEPTHS AND ALL LOCATIONS/DIMENSIONS PRIOR TO EXCAVATING. ALL UTILITIES MAY NOT BE SHOWN.

C. REFER TO CIVIL DRAWINGS FOR ADDITIONAL INFORMATION ON EXISTING AND NEW SITE CONDITIONS INCLUDING UTILITES.

D. ALL UNDERGROUND UTILITIES, PIPING, ETC. SHALL BE LOCATED EXACTLY BEFORE DIGGING.ANY BACKFILL SHALL BE TAMPED AND COMPACTED TO PREVENT FUTURE SETTLING. ALL EXCESS DIRT SHALL BE CLEARED FROM THE AREA AND DISPOSED OF.

E. ELECTRICAL CONTRACTOR SHALL REPAIR ALL DISTRUBED SURFACES SUCH AS SIDEWALKS, DRIVEWAYS, STREETS, GRASS, AND CONCRETE. REPLACED SURFACES SHALL MATCH EXISTING.

F. CONTRACTOR IS RESPONSIBLE FOR DOING ALL WORK PER LOCAL RESPECTIVE UTILITY REQUIREMENTS.

G. VERIFY EXACT LOCATIONS OF UTILITY CONNECTIONS, PRIOR TO START OF WORK.

ELECTRICAL PLAN KEYED NOTES

E1 PROVIDE 250 kW DIESEL GENERATOR WTH SOUND ATTENUATING ENCLOSURE AND INTEGRAL DIESEL UNDERBELLY TANK. REFER TO SHEET E501 AND SPECIFICATIONS FOR ADDITIONAL INFORMATION.

E2 PROVIDE 208V, 800A, NEMA 4, PAD MOUNTED, SERVICE ENTRANCE RATED 3-POLE AUTOMATIC TRANSFER SWITCH. PROVIDE 120V POWER TO ATS STRIP HEATER.

E3 EXISTING SERVICE CONDUCTORS SHALL BE DISCONNECTED AND REMOVED. COORDINATE PHASING WITH INSTALLATION OF NEW SERVICE ENTRANCE TRANSFER SWITCH AND TEMPORARY GENERATOR. MINIMIZE AND COORDINATE ANY REQUIRED DOWNTIME WITH OWNER.

E4 ALL PENETRATIONS THROUGH WALL SHALL BE SEALED TO BE WATERTIGHT AND MAINTAIN EXISTING RATINGS.

E5 LOCATE GENERATOR ANNUNCIATOR PANEL IN MAINTENACE BAY IN ACCESSIBLE LOCATION.

E6 PROVIDE AND LABEL EPO DEVICE TO SHUT-OFF FUEL DISPENSING PUMPS (GAS AND DIESEL) IN ACCORDANCE WITH NEC ARTICLE 514.11(A). EPO SHALL SHUT OFF CIRCUIT BREAKERS VIA SHUNT TRIP.

E7 POWER TO EXISTING FUEL TANK SHALL BE DISCONNECTED AND REMOVED. REFER TO SHEET C0100 FOR DETAILS ON TEMPORARY FUEL TANK LOCATION AND SCOPE. EXISTING CIRCUITS MAY BE REUSED IF DETERMINED FEASIBLE DURING CONSTRUCTION. INSTALL GROUND RODS WITH 4/0 COPPER INSULATED WIRE. BOND THE TRANK FRAME TO THE GROUNDING RODS USEING BARE 4/0 COPPER WIRE. GROUND AND BOND PER NEC ARTICLE 514.16 AND MANUFACTURERS INSTALLATION INSTRUCTIONS.

E8 PROVIDE 4'x4' MANHOLE WITH TRAFFIC RATED LID. SEE PHASING NOTES FOR ADDITIONAL INFORMATION.

E9 PROVIDE 250KW, 208Y/120V, DIESEL PORTABLE GENERATOR WITH 800A CIRCUIT BREAKER FOR TEMPORARY POWER DURING SERVICE OUTTAGE REQUIRED FOR INSTALLING NEW SERVICE CONDUCTORS.

E10 TEMPORARY SERVICE CONDUCTORS SHALL BE ROUTED OVERHEAD TO WALL ADJACENT TO MDP. ROUTE CONDUIT DOWN WALL AND INTO SIDE OF MDP CONNECTING TO BUS ON LINE SIDE OF MAIN CIRCUIT BREAKER. PROVIDE JUNCTION BOX AS REQUIRED. SEE PHASING NOTES FOR ADDITIONAL DETAILS.

NOTE: NOT ALL KEYED NOTES MAY BE USED ON EACH PLAN

ELECTRICAL SERVICE PHASING NOTES

1. INSTALL NEW GENERATOR AND AUTOMATIC TRANSFER SWITCH. PREPARE FOR SERVICE CONNECTIONS.
2. PROVIDE TEMPORARY 250KW GENERATOR WITH 800A CIRCUIT BREAKER.
3. DISCONNECT POWER TO MDP FROM TRANSFORMER T-34 AFTER ISOLATING POWER AND REMOVE SERVICE CONDUCTORS.
4. CONNECT TEMPORARY GENERATOR TO MDP. POWER SHALL BE ROUTED FROM GENERATOR TO MDP AND CONNECTED TO THE LINE SIDE OF THE MAIN CIRCUIT BREAKER.
5. TRENCH AND EXPOSE SERVICE ENTRANCE CONDUITS AND PATH TO TRANSFER SWITCH.
6. CUT CONDUITS, PROVIDE SLIP FITTINGS, AND INSTALL NEW MANHOLE.
7. ROUTE CONDUITS FROM HANDHOLE TO NEW TRANSFER SWITCH.
8. PULL NEW SERVICE AND GENERATOR CONDUCTORS TO TRANSFER SWITCH. PREPARE TO PULL CONDUCTORS FROM TRANSFER SWITCH TO MDP.
9. PULL NEW SERVICE CONDUCTORS FROM TRANSFORMER TO ATS AND FEEDER FROM ATS TO MDP.
10. DISCONNECT TEMPORARY GENERATOR AND PULL NEW SERVICE CONDUCTORS FROM ATS TO MDP.

BID DOCUMENTS

Revisions:	Date:

CONSULTANTS

IRRIGATION	GEOTECHNICAL	COST ESTIMATING
WATER IN MOTION, INC.	**TERRACON**	**OCMI**
175 James Avenue North Minneapolis, MN 55405 952.229.1911	611 Lunken Park Drive Cincinnati, Ohio 45226 513.612.9020	2100 North Greenville Ave. Richardson, Texas 75082 469.431.0571
TIMOTHY MALOOLY	**JEFF DUNLAP, PE**	**KYLE VEATER**

ARCHITECT/ENGINEER OF RECORD

ANDERSON

13605 1st Ave. N. #100 Plymouth, MN 55441
P 763.412.4000 | F 763.412.4090 | ae-mn.com
Anderson Engineering of Minnesota, LLC | Proj # 18125

STAMP

STATE OF OHIO
WILLIAM HAAS
E-83914
REGISTERED PROFESSIONAL ENGINEER

Office of Design and Construction Services

VA U.S. Department of Veterans Affairs

Drawing Title: ELECTRICAL SITE PLAN

Approved:

Phase: BID DOCUMENTS

Project Title: DAYTON NATIONAL CEMETERY GRAVESITE EXPANSION

Location: 4400 W THIRD ST. DAYTON, OH 45428

Issue Date: FEBRUARY 5, 2026

Checked: WH

Drawn: ATW

Project Number: 810CM3033

Building Number: -

Drawing Number: ES101

158 of 160

VA FORM 08 - 6231

C:\Users\awieber\Documents\18125_Dayton NCA_E_R23_awieber9654f-.rvt

1/28/2026 12:42:53 PM

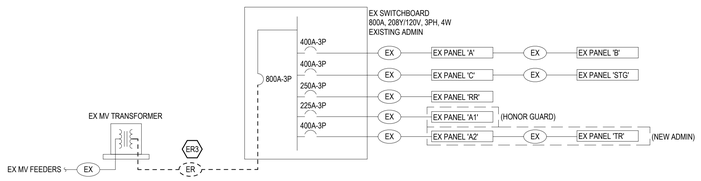

1 ONE-LINE DIAGRAM - DEMOLITION

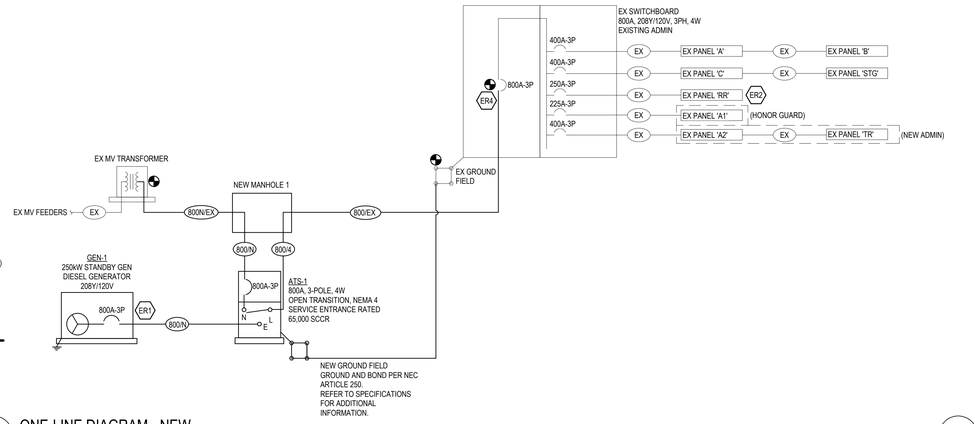

2 ONE-LINE DIAGRAM - NEW

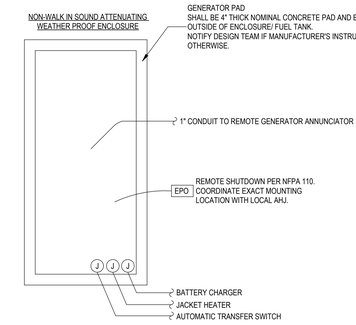

4 GENERATOR ROUGH-IN DETAIL

ELECTRICAL RISER GENERAL NOTES

1. REFER TO ELECTRICAL SITE PLAN ES101 FOR ADDITIONAL REQUIREMENTS AND RESPONSIBILITIES.
2. ELECTRICAL POWER OUTAGES, IF REQUIRED, SHOULD BE STRATEGICALLY MINIMIZED AND SCHEDULED CLOSELY WITH OWNER. CHANGEOVERS COULD BE REQUIRED TO OCCUR AT ANY HOUR.
3. MAINTAIN ALL SERVICE CLEARANCES REQUIRED BY THE NEC.
4. INSTALL ALL CONDUCTORS AS PER MANUFACTURER'S RECOMMENDATIONS.
5. ELECTRICAL SERVICE LAYOUT MAY VARY FROM WHAT IS SHOWN ON PLANS BASED ON MANUFACTURER PROVIDING THE SYSTEM. ELECTRICAL CONTRACTOR IS RESPONSIBLE FOR FITTING SYSTEM PROVIDED INTO SPACE SHOWN ON PLANS.

ELECTRICAL RISER KEYED NOTES

- ER1 — COORDINATE EXACT LOCATION OF GENERATOR SHUT DOWN WITH AHJ PRIOR TO ROUGH-IN.
- ER2 — REFER TO PANEL SCHEDULE FOR ADDITIONAL CIRCUIT AND BREAKER INFORMATION.
- ER3 — EXISTING CONDUCTORS SHALL BE REMOVED AND CONDUITS SHALL BE CLEANED IN PREPARATION OF PULLING NEW SERVICE CONDUCTORS.
- ER4 — VERIFY EXISTING MAIN SERVICE DISCONNECT CONNECTIONS PRIOR TO PULLING CONDUCTORS.

NOTE: NOT ALL KEYED NOTES MAY BE USED ON EACH PLAN

SERVICE ENTRANCE COPPER CONDUCTOR AND CONDUIT SIZING CHART

	CONDUCTORS (THWN-2)			CONDUIT		PARALLEL RUNS
	PHASE	NEUTRAL	GROUND	EMT	SCH 80	
800/N	(3) 300 MCM	300 MCM	-	3"	3"	3
800/N/EX	(3) 300 MCM	300 MCM	-	EX	EX	3
800/EX	(3) 300 MCM	300 MCM	1/0 AWG	EX	EX	3

COPPER CONDUCTOR AND CONDUIT SIZING CHART

	CONDUCTORS (THWN-2)			CONDUIT		PARALLEL RUNS
	PHASE	NEUTRAL	GROUND	EMT	SCH 80	
15/4	(3) #12 AWG	#12 AWG	#12 AWG	3/4"	3/4"	1
20/4	(3) #12 AWG	#12 AWG	#12 AWG	3/4"	3/4"	1
25/4	(3) #10 AWG	#10 AWG	#10 AWG	3/4"	3/4"	1
30/4	(3) #10 AWG	#10 AWG	#10 AWG	3/4"	3/4"	1
35/4	(3) #8 AWG	#8 AWG	#10 AWG	1"	1"	1
40/4	(3) #8 AWG	#8 AWG	#10 AWG	1"	1"	1
45/4	(3) #6 AWG	#6 AWG	#10 AWG	1"	1"	1
50/4	(3) #6 AWG	#6 AWG	#10 AWG	1"	1"	1
60/4	(3) #4 AWG	#4 AWG	#10 AWG	1-1/4"	1-1/4"	1
70/4	(3) #4 AWG	#4 AWG	#8 AWG	1-1/4"	1-1/4"	1
80/4	(3) #3 AWG	#3 AWG	#8 AWG	1-1/4"	1-1/4"	1
90/4	(3) #2 AWG	#2 AWG	#8 AWG	1-1/4"	1-1/4"	1
100/4	(3) #2 AWG	#2 AWG	#8 AWG	1-1/4"	1-1/4"	1
110/4	(3) #2 AWG	#2 AWG	#6 AWG	1-1/4"	1-1/2"	1
125/4	(3) #1 AWG	#1 AWG	#6 AWG	1-1/2"	2"	1
150/4	(3) 1/0 AWG	1/0 AWG	#6 AWG	2"	2"	1
175/4	(3) 2/0 AWG	2/0 AWG	#6 AWG	2"	2"	1
200/4	(3) 3/0 AWG	3/0 AWG	#6 AWG	2"	2-1/2"	1
225/4	(3) 4/0 AWG	4/0 AWG	#4 AWG	2-1/2"	2-1/2"	1
250/4	(3) 250 MCM	250 MCM	#4 AWG	2-1/2"	3"	1
300/4	(3) 350 MCM	350 MCM	#4 AWG	3"	3"	1
350/4	(3) 500 MCM	500 MCM	#3 AWG	3"	3-1/2"	1
400/4	(3) 3/0 AWG	3/0 AWG	#3 AWG	2"	2-1/2"	2
450/4	(3) 4/0 AWG	4/0 AWG	#2 AWG	2-1/2"	2-1/2"	2
500/4	(3) 250 MCM	250 MCM	#2 AWG	2-1/2"	3"	2
600/4	(3) 350 MCM	350 MCM	#1 AWG	3"	3"	2
700/4	(3) 500 MCM	500 MCM	1/0 AWG	3"	3-1/2"	2
800/4	(3) 300 MCM	300 MCM	1/0 AWG	3"	3"	3

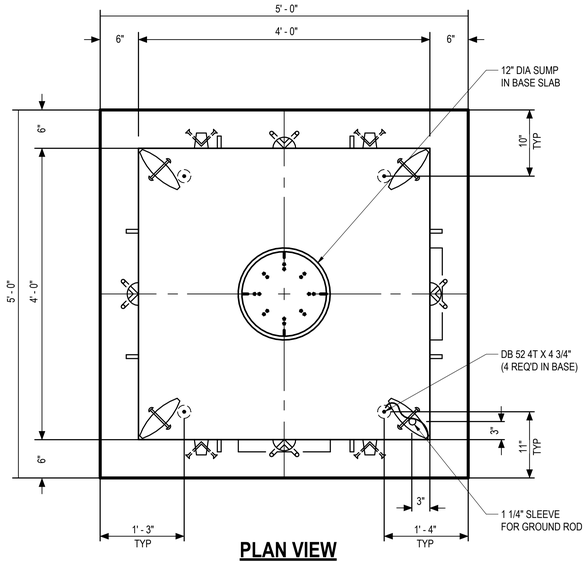

PLAN VIEW

TOP NOT SHOWN FOR CLARITY

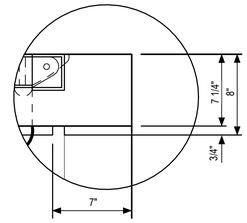

DETAIL 1

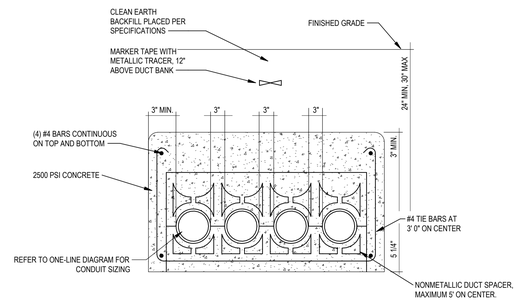

NOTES:
1. INSTALL 200LB TENSILE STRENGTH BRAIDED POLYPROPYLENE PULL CORD IN ALL CONDUITS.
2. TRENCHING AND BACKFILL ACCORDING TO SPECIFICATIONS.
3. DOWEL ENDS OF DUCTBANK TO FOUNDATION OR MANHOLE WITH A MINIMUM OF (4) #4 DOWELS.

5 DUCT BANK SECTION

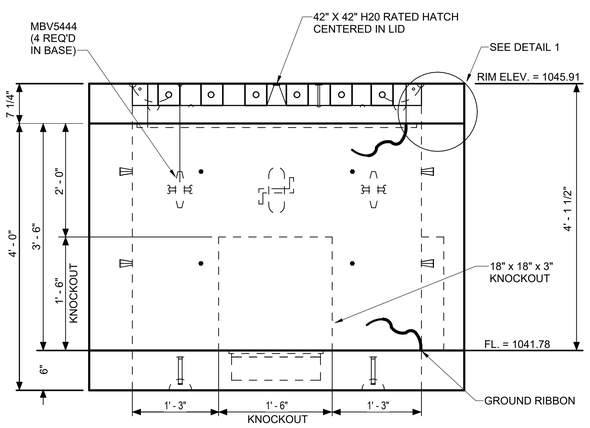

VIEW A

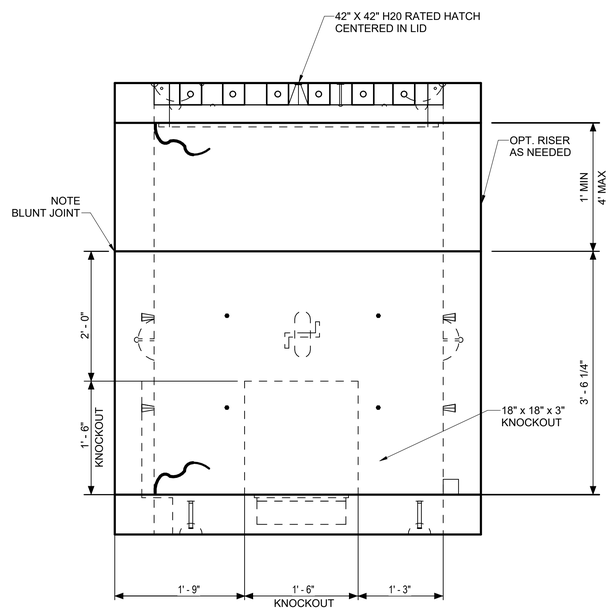

VIEW B

6 4X4 MANHOLE DETAIL

Panelboard: PANEL RR

Location:
Supply:
Mounting: Surface
Enclosure: NEMA 1

Voltage: 208 V, 3Ø, 4W
Bus Rating: 250 A
Neutral: 100%
Feed-Thru Lugs: No
Features & Modifications: -

Mains Type: MLO
Mains Rating: 250 A
Mains FN/Note: -
SCCR: 10 kA

EXISTING SQUARE D TYPE NF PANELBOARD.

Ckt	Description	Trip (A)	Poles	FN/Note	Phase A Load (VA)		Phase B Load (VA)		Phase C Load (VA)		FN/Note	Poles	Trip (A)	Description	Ckt
1	RECEPT	20	1	EXIST	0	0					EXIST	1	20	ELECTRICA FAUCET/FLUSH VALVES	2
3	HAND DRYER	20	1	EXIST			0	0			EXIST	1	20	HAND DRYER	4
5	HAND DRYER	20	1	EXIST					0	0	EXIST	1	20	HAND DRYER	6
7	HAND DRYER	20	1	EXIST	0	0					EXIST	1	20	RECEPT	8
9	LIGHTS	20	1	EXIST			0	0			EXIST	1	20	Spare	10
11	LIGHTS	20	1	EXIST					0	0	EXIST	2	30	CU-1	12
13	BCU-1	20	3	EXIST	0	0									14
15							0	0			EXIST	2	15	EUH-1	16
17									0	0					18
19	ERU-1	15	2	EXIST	0	0					EXIST	2	15	EUH-2	20
21							0	0							22
23	DOOR LATCH	20	1	EXIST					0	0	EXIST	2	60	UNIT HEATER	24
25	UNIT HEATER	60	2	EXIST	0	0									26
27							0	**360**			**ST**	**1**	**20**	**FUEL PUMP**	28
29	**HEATER**	**20**	**1**	**EXIST**					**360**	**--**	**ST**	**1**	**--**	**SHUNT TRIP**	30
31	**BATTERY CHARGER**	**20**	**1**	**EXIST**	**360**	**360**					**ST**	**1**	**20**	**FUEL PUMP**	**32**
33	**GEN EPO**	**20**	**1**	**EXIST**			**360**	**--**			ST	1	--	SHUNT TRIP	34
35	**ATS HEATER**	**20**	**1**	**EXIST**					**360**	**360**	**EXIST**	**1**	**20**	**FUEL EPO**	**36**
37	Spare	20	1	EXIST	0	0					EXIST	1	20	Spare	38
39	Spare	20	1	EXIST			0	0			EXIST	1	20	Spare	40
41	Spare	20	1	EXIST					0	0	EXIST	1	20	Spare	42
				Connected Load:	1 kVA		1 kVA		1 kVA						
				Connected Current:	6 A		6 A		9 A						

Load Classification	Connected	Factor	Demand
Other	2520 VA	100.00%	2520 VA

Panel Totals	
Connected Load:	3 kVA
Connected Current:	7 A
Demand Load:	3 kVA
Demand Current:	7 A

Notes:

BID DOCUMENTS

Revisions: | Date:

CONSULTANTS

IRRIGATION — **WATER IN MOTION, INC.** — 175 James Avenue North, Minneapolis, MN 55405, 952.229.1911 — **TIMOTHY MALOOLY**

GEOTECHNICAL — **TERRACON** — 611 Lunken Park Drive, Cincinnati, Ohio 45226, 513.612.9020 — **JEFF DUNLAP, PE**

COST ESTIMATING — **OCMI** — 2100 North Greenville Ave., Richardson, Texas 75082, 469.431.0571 — **KYLE VEATER**

ARCHITECT/ENGINEER OF RECORD

ANDERSON
13605 1st Ave. N. #100 Plymouth, MN 55441
P 763.412.4000 | F 763.412.4090 | ae-mn.com
Anderson Engineering of Minnesota, LLC | Proj # 18125

STAMP: STATE OF OHIO — WILLIAM HAAS — E-83914 — REGISTERED PROFESSIONAL ENGINEER

Office of Design and Construction Services

VA U.S. Department of Veterans Affairs

Drawing Title: ELECTRICAL DETAILS

Approved:

Phase: BID DOCUMENTS

Project Title: DAYTON NATIONAL CEMETERY GRAVESITE EXPANSION

Location: 4400 W THIRD ST. DAYTON, OH 45428

Project Number: 810CM3033

Building Number: -

Drawing Number: E501

159 of 160

Issue Date: FEBRUARY 5, 2026 | Checked: WH | Drawn: ATW

VA FORM 08 - 6231

C:\Users\awaber\Documents\18125_Dayton NCA_E_R23_awaber96546.rvt

1/29/2026 12:42:55 PM

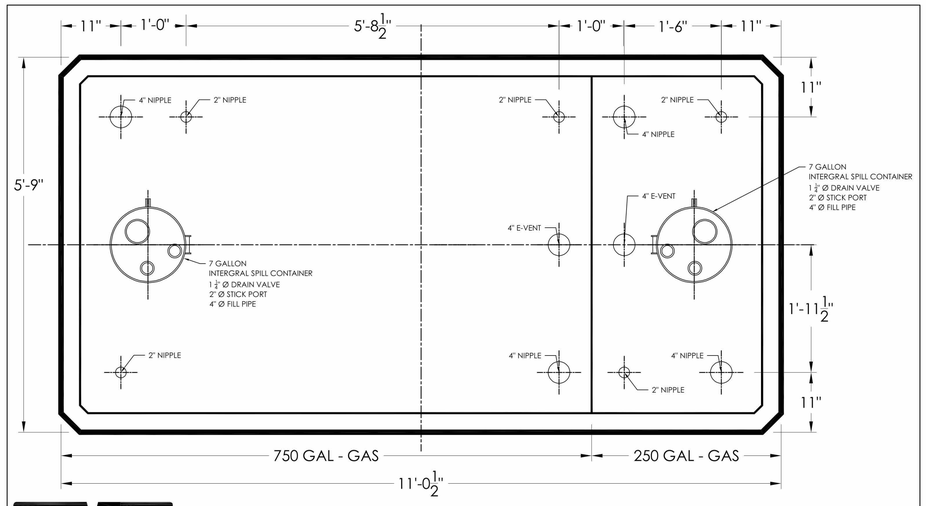

CONVAULT

750/250 GALLON SPLIT CONVAULT

APPROVED:_____

DATE:_____

NOTES:

1. CONFIGURATION ABOVE IS A CUSTOM LAYOUT.
2. STAINLESS STEEL FITTINGS ARE AVAILABLE FOR AN ADDITIONAL CHARGE.
3. DESIGN PER CONVAULT ™ STANDARDS.
4. MEETS UL 142 AND UL 2085 STANDARDS.
5. HURRICANE HOLD DOWN STRAPS AVAILABLE FOR AN ADDITIONAL CHARGE.
6. MAINTENANCE CONTRACTS AVAILABLE.

OXFORD TANK
463 Mc Laughlin Road, Greenville, GA 30222
(352) 457-2503 | oxfordtank.com

TITLE	CUSTOM TANK LAYOUT
DWG. NO.	CONVAULT-01
PAGE	3 OF 3
SCALE	3/4" = 1' -0"
DATE	03-02-2025
MANUFACTURED BY:	GEORGIA CONCRETE AND PRECAST 463 McLAUGHLIN RD, GREENVILLE, GA. 30222 678-423-0386 | WWW.GEORGIACONCRETEANDPRECAST.COM

NOTE: ALL RIGHTS RESERVED. THIS DRAWING MUST NOT BE REPRODUCED IN ANY FORM WITHOUT THE WRITTEN PERMISSION OF HIGHLAND TANK®. HIGHLAND TANK® SHALL BE RESPONSIBLE ONLY FOR ITEMS INDICATED ON THIS FABRICATION DRAWING UNLESS OTHERWISE NOTED. CUSTOMER IS RESPONSIBLE FOR VERIFYING CORRECTNESS OF SIZE AND LOCATION OF FITTINGS, ACCESSORIES, AND COATINGS SHOWN ON THIS DRAWING.

TOUCH UP OF FINISHED PAINT IS REQUIRED BY INSTALLATION CONTRACTOR. TOUCH UP PAINT SHIPPED WITH TANK.

SHIP LOOSE

(2) 4" MALE THREADED EMERGENCY VENTS

(1) HIGH-LINK LEVEL SHIELD MODEL# LS_XEXD_1500 59" LONG & BUSHING WITH LS_LINK_GPRS COMMUNICATION BOX.

NOTES:
STRIKER PLATES ARE NOT SUPPLIED ON FIREGUARD® UNLESS SPECIFIED

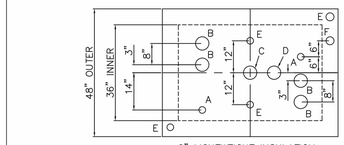

6" LIGHTWEIGHT INSULATION MATERIAL WITHIN INTERSTICE

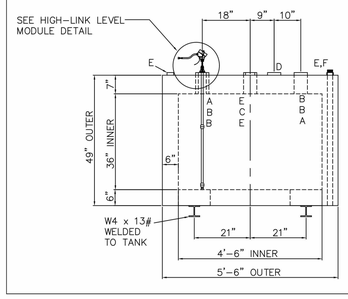

HIGH-LINK LEVEL SHIELD DETAIL

COMMUNICATION BOX DETAIL

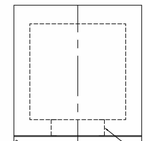

FITTINGS NOT SHOWN THIS VIEW

DESIGN DATA	
CAPACITY : 300 GALLON	
TYPE: FIREGUARD® RECTANGULAR	
FIREGUARD® IS A TRADEMARK OF THE STEEL TANK INSTITUTE	
NO. REQ. – –	
OPERATING PRESSURE – ATMOSPHERIC	
SPECIFIC GRAVITY = 1.0	
TANK MATERIAL – MILD CARBON STEEL	
THICKNESS – INNER – 10 GAUGE THICKNESS – OUTER – 7 GAUGE MIN. GAUGE OR THICKNESS (PER U.L. 2085)	
CONSTRUCTION – INNER – LAP WELD OUTSIDE ONLY CONSTRUCTION – OUTER – LAP WELD OUTSIDE ONLY	
TANK TEST – INNER – 1.5 TO 3 PSIG OUTER – 1.5 TO 3 PSIG	
INT. FINISH – NONE – –	
EXT. FINISH – SP-6 BLAST, FINISH PAINT WHITE	
LABEL– UL 2085 AND FIREGUARD® PER stl	

LEGEND	
A	2" FEMALE FIREGUARD COUPLING
B	4" FEMALE FIREGUARD COUPLING
C	4" FEMALE FIREGUARD COUPLING – FOR PRIMARY EMERGENCY VENT USE ONLY
D	4" FITTING THROUGH OUTER SHELL ONLY – INTERSTITIAL EMERGENCY VENT USE ONLY
E	2" FITTING THROUGH OUTER SHELL ONLY WITH CAST IRON PLUG – FOR MFG USE ONLY
F	2" INTERSTITIAL MONITOR PIPE – MALE NPT END

Highland Tank
UNLESS NOTED, TOLERANCES ARE +/- 1"
300 GAL REC. FIREGUARD®
PATENT: 5,695,089 PATENT: 5,809,650
CUSTOMER:
PROJECT:
QUOTE NO: CHK'D BY:
SCALE: 1/2"=1'-0" DATE: DWG. BY: DWG. NO: 00300FGREC

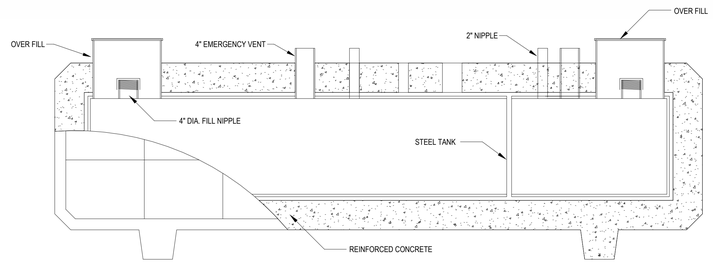

1 FUELING STATION - SECTION 1
SCALE: N.T.S.

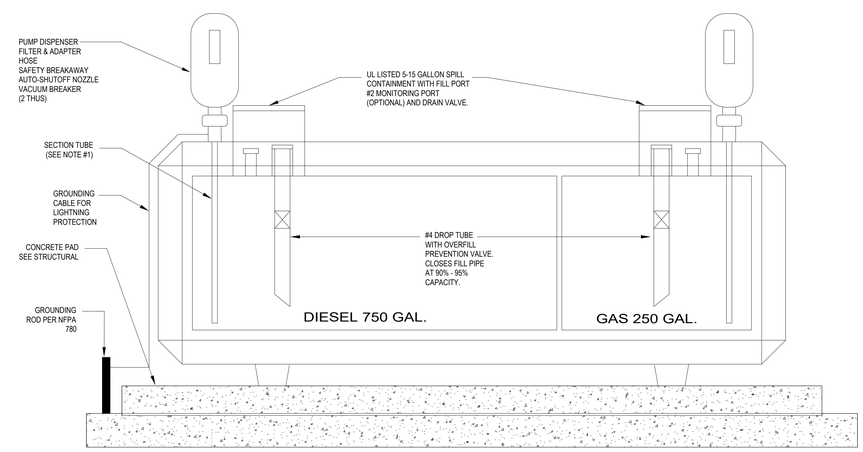

2 FUELING STATION - SECTION 2
SCALE: N.T.S.

BID DOCUMENTS

SPECIFICATION FOR ABOVE GROUND STORAGE TANK SYSTEM

1. 1. The primary and insulated secondary containment Above Ground Storage Tank system for flammable and combustable liquids, Protection Type: Vehicle Impact Protected, and Projectile Resistant, shall be tested to and listed for the following:

a. UL 142: Above Ground Steel Tanks for Flammable and Combustible Liquids.
b. UL 752: Standard for Bullet-Resisting Equipment
c. UL 2085: 2-Hour Furnace Fire Test and 2-Hour Simulated Pool Fire Test for insulated and protected tanks.

2 . The primary steel tank shall be rectangular in shape and have continuous welds on all exterior seams, manufactured in accordance with UL Listing requirements and UL Standard 142. Steel tank thickness shall be 3/16" thick (7 gauge).

3. The primary steel tank shall be pressure tested at 5 psig for 24 to 48 hours.

4. The primary steel tank shall have emergency vent system as per NFPA 30 Code requirements.

5. The primary steel tank shall have 2 inch positive shutoff valve (125-6,000).

6. The protected and insulated AST systems shall have a thru-tank leak detector tube to allow for physical checkup and monitoring capability between the primary and the secondary containment.

7. The primary steel tank shall be pressurized at 5 psig during concrete encasement.

8. The outer surface of the primary steel tank shall be covered by a minimum of ¼ " thick (6.4mm) Styrofoam insulation panels.

9. The secondary containment shall be impervious to corrosion, including damage or failure due to microbial infestation.
Because steel is known to be affected by microbial influenced corrosion, the secondary containment shall consist of A 30 mil thick (0.76 mm) High-Density Polyethylene membrane enclosing the steel tank and insulation material.

10. The primary steel tank and secondary containment shall be encased in six (6) inches of monolithic reinforced concrete, with minimum design strength of 4,000 and 5,000 psi at 28 days. The concrete design shall include the following for long-term durability: air entrainment, water reducing admixture, and steel reinforcement. Concrete encasements with seams will not be approved.

11. The protected and insulated AST system shall be of concrete exterior and a continuous and visually verifiable monolithic (seamless) pour on top, bottom, ends, and sides and contain no cold joints or heat sinks. The AST must be shop fabricated and tested in accordance with the UL listings. Designs that use two layers of steel with insulation materials between them will not be approved.

12. No steel or insulating materials shall come in contact with the concrete or other corrosive materials.

13. All openings shall be from the top only.

14. The vault enclosure shall have concrete support legs of unitized monolithic construction raising the concrete enclosure a minimum of 3 " above the ground to meet visual inspection requirements. A mid-level seam or other cold joint construction which could compromise the liquid tightness (secondary containment) and fire protection capability of the vault is not permitted.

15. All exposed metal with the exception of stainless steel must be powder coated to inhibit corrosion.

16. The protected and insulated AST system shall include a 15 gallon powder coated or stainless steel, UL listed spill containment, and shall include normally closed valve to release spilled product into the primary steel tank. Spill containment which route the spilled product into interstitial area will not be approved.

17. The protected and insulated AST system shall have a coated concrete exterior to resist weather and reflect sunlight. Models with steel exteriors will not be approved.

18. The protected and insulated AST system shall be warranted by the manufacturer against defects in material or workmanship for 20 years following delivery of the tank.

19. Lighting Protection: The protected and insulated AST system shall have two (2) bolts for connecting grounding conductors for lighting protection in accordance with NFPA 780.

20. Fire Resistance: The tank system shall be designed and tested to provide 2 hour fire protection for the primary tank as per UL 2085 2-hour furnace fire test and 2 hour simulated pool fire test. The average maximum rise in temperature of the primary tank during the test shall not exceed 260° F and the maximum temperature of any single point on the primary tank shall not exceed 400° F. No steel members shall penetrate the walls or floor of the concrete encasement to assure isolation from pool fire heat.

21. Leak Monitoring: A thru-tank leak detection monitoring tube terminating between the primary tank and the secondary containment shall be provided to monitor any leaks from the primary tank. The leak monitoring shall be double unit high level and leak detection system.

22. Spill/Overfill Containment: The tank system shall include a UL listed 7 gallon spill/overfill container manufactured as an integral part of the primary tank, surrounding the fill pipe, and protected by 2 hour fire rating of the enclosure. The spill/overfill container shall include a stick port and normally closed drain valve to release spilled product into the main tank. Exterior steel shall be anti-oxidant powder coated to inhibit rust. Overfill containment systems that are designed to release spilled product into the interstitial area will not be accepted.

23. Overfill Protection: Overfill protection shall be provided by the following methods: a) direct reading level gauge visible from fill pipe access; b) valve rated for pressurized delivery located within fill pipe to close automatically at 95% full level; and c) high level alarm.

24. Coordinate crane & rigging based on the following notional tank sizes & weights:
a. Capacity: 1,000 gallons
b. Weight: 18,000 lbs
c. Length: 11' – 0"
d. Width: 5' – 8"
e. Vault Height: 4' – 4"
f. Shipping Height approximately 6' – 4"

SPECIFICATION FOR FUEL MONITORING, DISPENSING, AND CONTROL SYSTEMS

1. The stand-alone, pedestal-mounted fuel-control system that can be used by small or mid-sized fleets that require two-hose control at unattended fueling sites. The fuel-control system will have the following Certifications and Listings:

2. Electronic Testing Labs (ETL), per Underwriters Laboratories UL 1238

3. The fuel-control system shall consist of a fuel-site controller that governs system operation. It is a turnkey system that allows for immediate use after installation without any configuration changes. The default configuration allows for all purchased cards to be configured with unique PINs by the user on the first use of the card. After configuration of the card's PIN, a second swipe of the card will provide access to authorized fuels dispensed by the system.

4. Dimensions. The Cabinet shall have a width of 14.25" (36.2 cm), a height of 10.75" (27.3 cm), and a depth of 9.75" (24.8 cm). The Pedestal shall have a width of 14.0" (35.6 cm), a height of 48.0" (122 cm), and a depth of 9.0" (22.9 cm).

5. Power Requirements. The fuel-control system's power requirements shall be 115/230 VAC, 50/60 Hz, and 200 watts maximum.

6. Operating Temperature. The fuel-control system shall operate at a temperature range of -40°F to 122°F (-40°C to 50°C).

7. Graphics Display. The fuel-control system shall have a 5.0 " (12.7 cm) monochrome graphics display.

8. Enclosure & Pedestal. The fuel-control system shall be constructed of painted steel.

9. Memory. The fuel-control system's memory shall include:
   - Standard tracking of up to 50 proprietary cards
   - Expandability to 250 proprietary cards
   - Storage of a virtually unlimited number of transactions on an optional USB flash drive

g. Additional Components. The fuel-control system's mechanical pump relay board shall be expandable up to two (2) hoses and have the following characteristics:
   - Power rating shall be 240 VAC, 20 A, 3.0 Hp maximum
   - "In-Use" detection shall be Voltage Sense 120-240 VAC or Handle Switch
   - Pulser type shall be single-channel
   - Pulser input shall be mechanical (contact) or electronic (5-12 VDC)
   - Divide rate shall be 1:1 – 1,000:1; 1-pulse increments
   - Maximum pulse speed at 50% duty cycle shall be 6,000 mechanical; 100,000 electronic.

3. Fuel-control system minimum capabilities and features the fuel-control system shall possess:
a. The system shall be a turnkey system
b. The system shall feature field-upgradeable software
c. The system shall track fueling by card or pump total with specific transaction data optional
d. The system shall have menu-driven configuration that takes place at the terminal
e. The system shall control up to two (2) tank-mounted pump packages, and hoses for mechanical pumps. One for diesel, and one for gasoline.
f. The system shall use selectable PINs from three (3) to six (6) digits in length
g. The system shall only allow authorized users to access fuel
h. The system shall have hose-based quantity restrictions
i. The system shall have manual system bypass control that enables pump relays and the recording of dispensed fuel volumes during a specific time
j. The system shall have a monochrome graphic display
k. The system shall have an optional dual-head magnetic card reader
l. The system shall have an optional HID proximity key-fob reader
m. The system shall have an optional USB flash drive for transaction storage
n. The system shall offer:
   - adjustable programming parameters
   - the ability to view card and pump totals
   - the ability to transfer all data to a USB flash drive via Manager Card access in on-screen manager modes

4. The dispensing system controller (DSC) shall be a Nema 4X enclosure, panel mounted emergency stop control, motor starter for multiple pumps includes wiring diagram.
a. Stainless steel emergency stop (new or existing).
b. Manufacturer support and services shall be provided. At a minimum:
c. The manufacturer shall provide technical phone support to Authorized Warranty Service Organizations, Authorized Distributors and their service personnel.
d. 4.2 The manufacturer shall require training and certification for all of its authorized distributors and installers.
e. The manufacturer shall provide certification information on authorized distributors and installers.
f. The manufacturer shall offer re-certification training to keep authorized distributors and installers updated with current product information, installations and procedures.
g. The distributor or service organization shall be available to offer on-site training of company maintenance personnel on installation, programming and troubleshooting of the system.
h. The manufacturer shall offer replacement parts to authorized service organizations for servicing systems.
i. The manufacturer shall offer overnight shipping on replacement parts to minimize system downtime.
j. The manufacturer will supply, upon request, a formal list of all authorized and certified distributors and service contractors for sales, support and installation.

Revisions:	Date:

CONSULTANTS

IRRIGATION	GEOTECHNICAL	COST ESTIMATING
WATER IN MOTION, INC.	TERRACON	OCMI
175 James Avenue North Minneapolis, MN 55405 952.229.1911	611 Lunken Park Drive Cincinnati, Ohio 45226 513.612.9020	2100 North Greenville Ave. Richardson, Texas 75082 469.431.0571
TIMOTHY MALOOLY	JEFF DUNLAP, PE	KYLE VEATER

ARCHITECT/ENGINEER OF RECORD
ANDERSON
13605 1st Ave. N. #100 Plymouth, MN 55441
P 763.412.4000 | F 763.412.4090 | ae-mn.com
Anderson Engineering of Minnesota, LLC | Proj # 18125

STAMP
STATE OF OHIO
RUSSELL SCHULTZ
PE-82823
REGISTERED
PROFESSIONAL ENGINEER

Office of Design and Construction Services

VA U.S. Department of Veterans Affairs

Drawing Title: FUEL TANK DETAILS	Phase: BID DOCUMENTS	Project Title: DAYTON NATIONAL CEMETERY GRAVESITE EXPANSION	Project Number: 810-CM3-033
Approved:		Location: 4400 W THIRD ST, DAYTON, OH 45428	Building Number: --
		Issue Date: FEBRUARY 5, 2026 · Checked: RS · Drawn: MB	Drawing Number: MP111 160 of 160

VA FORM 08 - 6231

C:\Users\mbatha\Documents\18125_Mech_R23_mbatha.RVT43.rvt
12/3/2025 10:55:36 AM