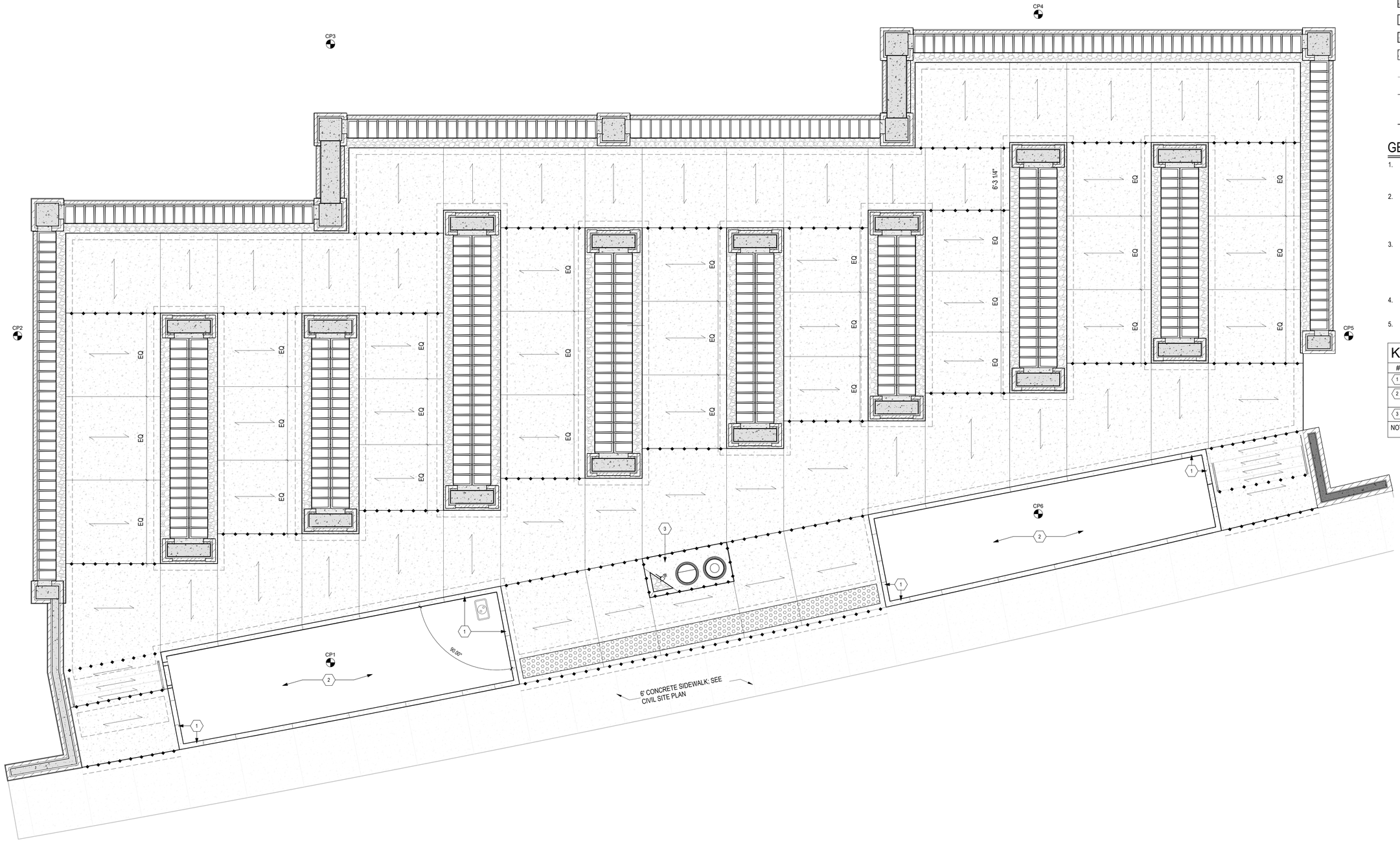

LEGEND

- CAST-IN-PLACE CONCRETE COLUMN (TOW = TOP OF WALL)
- LIGHT DUTY CONCRETE PAVEMENT; SEE 5/CS504
- DECORATIVE AGGREGATE FLOWER STRIP
- DETECTABLE WARNING PANEL; SEE 8/CS502
- CONTROL JOINT; SEE 7/CS504
- EXPANSION JOINT; SEE 7/CS504
- BROOM DIRECTION
- THICKENED EDGE

GENERAL NOTES

1. IN THE EVENT OF ANY DISCREPANCIES BETWEEN THE CONTRACT DRAWING LAYOUT AND DIMENSIONING AND FIELD CONDITIONS NOTIFY ENGINEER IMMEDIATELY.
2. CONSTRUCTION/COLD JOINTS WHERE REQUIRED SHALL OCCURE AT CONTROL JOINT LOCATION(S) SHOWN ON PLAN. CONTRACTOR SHALL SUBMIT A PAVING SEQUENCE PLAN FOR REVIEW AND APPROVAL.
3. CONSTRUCTION JOINTS HAVE BEEN SHOWN AS A RECOMMENDATION FOR SEQUENCING OF POURS. CONSTRUCTION JOINTS MAY BE SUBSTITUTED FOR CONTROL JOINTS BASED ON PAVING SEQUENCE PLAN SUBMITTED BY THE CONTRACTOR PRIOR TO PLACEMENT OF CONCRETE.
4. CONTROL JOINTS ADJACENT TO LANDSCAPE EDGER CURB SHALL BE CONTINUOUS ALL THE WAY THROUGH THE CURB.
5. INSTALL EXPANSION JOINTS AT THE ENDS OF ALL WALLS ABUTING CONCRETE FLATWORK.

KEYNOTES

#	DESCRIPTION
1	LANDSCAPE EDGER CURB; SEE 8/LS504
2	PLANTING BED; SEE GRADING AND PLANTING PLANS
3	FLOWER WATER STATION; SEE 1/CS502

NOTES:

1 COLUMBARIUM 'C' - FLATWORK LAYOUT PLAN
1/4" = 1'-0"

0 2' 4' 8'

TRUE NORTH

BID DOCUMENTS

Revisions:	Date:

CONSULTANTS

IRRIGATION:	GEOTECHNICAL:	COST ESTIMATING:
WATER IN MOTION, INC.	TERRACON	OCMI
175 JAMES AVENUE NORTH MINNEAPOLIS, MN 55405 952.229.1911	611 LUNKEN PARK DRIVE CINCINNATI, OHIO 45226 513.612.9020	2100 NORTH GREENVILLE AVENUE RICHARDSON, TEXAS 75082 469.431.0571
TIMOTHY MALOOLY	JEFF DUNLAP, PE	KYLE VEATER

ARCHITECT/ENGINEER OF RECORD

ANDERSON

13605 1st Ave. N. #100 Plymouth, MN 55441
P 763.412.4000 | F 763.412.4090 | ae-mn.com
Anderson Engineering of Minnesota, LLC | Proj # 18125

STAMP

Office of Design and Construction Services

VA U.S. Department of Veterans Affairs

Drawing Title: COLUMBARIUM - FLATWORK LAYOUT PLAN

Approved:

Phase: BID DOCUMENTS

Project Title: DAYTON NATIONAL CEMETERY GRAVESITE EXPANSION

Location: 4400 W THIRD ST, DAYTON, OH 45428

Issue Date: DECEMBER 5, 2025 | Checked: JAF | Drawn: RJL

Project Number: 810CM3033

Building Number:

Drawing Number: LS120

C:\Users\rlebel\Documents\18125 DNC Columbarium_RJLlebel4988.rvt

2026-02-11 9:18:28

VA FORM 08 - 6231

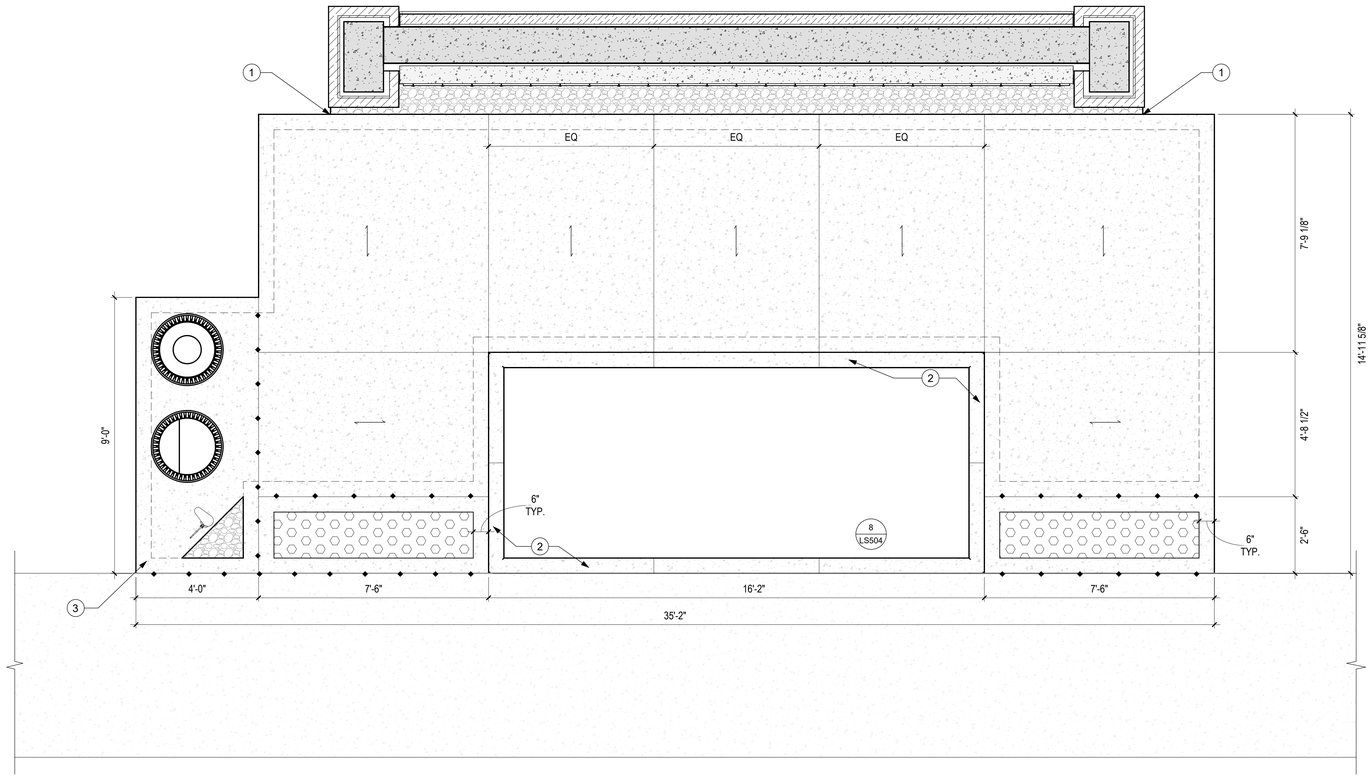

1 MEMORIAL WALL - FLATWORK LAYOUT PLAN
1/2" = 1'-0"

0 1' 2' 4'

TRUE NORTH

LEGEND

- CAST-IN-PLACE CONCRETE COLUMN (TOW = TOP OF WALL)
- LIGHT DUTY CONCRETE PAVEMENT; SEE 5/CS504
- DECORATIVE AGGREGATE FLOWER STRIP
- DETECTABLE WARNING PANEL; SEE 8/CS502
- CONTROL JOINT; SEE 7/CS504
- EXPANSION JOINT; SEE 7/CS504
- BROOM DIRECTION
- THICKENED EDGE

GENERAL NOTES

1. IN THE EVENT OF ANY DISCREPANCIES BETWEEN THE CONTRACT DRAWING LAYOUT AND DIMENSIONING AND FIELD CONDITIONS NOTIFY ENGINEER IMMEDIATELY.
2. CONSTRUCTION/COLD JOINTS WHERE REQUIRED SHALL OCCURE AT CONTROL JOINT LOCATION(S) SHOWN ON PLAN. IF NEEDED ELSE WHERE, CONTRACTOR SHALL SUBMIT A PAVING SEQUENCE PLAN FOR REVIEW AND APPROVAL.
3. CONTROL JOINTS ADJACENT TO LANDSCAPE EDGER CURB SHALL BE CONTINUOUS ALL THE WAY THROUGH THE CURB

KEYNOTES

#	DESCRIPTION
1	FLUSH CURB TRANSITION, SEE 6/CS504
2	LANDSCAPE EDGER CURB, SEE 8/LS504
3	FLOWER WATER STATION; SEE 1/CS502

BID DOCUMENTS

Revisions:	Date:

CONSULTANTS

IRRIGATION:	GEOTECHNICAL:	COST ESTIMATING:
WATER IN MOTION, INC.	TERRACON	OCMI
175 JAMES AVENUE NORTH MINNEAPOLIS, MN 55405 952.229.1911	611 LUNKEN PARK DRIVE CINCINNATI, OHIO 45226 513.612.9020	2100 NORTH GREENVILLE AVENUE RICHARDSON, TEXAS 75082 469.431.0571
TIMOTHY MALOOLY	JEFF DUNLAP, PE	KYLE VEATER

ARCHITECT/ENGINEER OF RECORD

ANDERSON

13605 1st Ave. N. #100 Plymouth, MN 55441
P 763.412.4000 | F 763.412.4090 | ae-mn.com
Anderson Engineering of Minnesota, LLC | Proj # 18125

STAMP

Office of Design and Construction Services

VA U.S. Department of Veterans Affairs

Drawing Title: MEMORIAL WALL - FLATWORK LAYOUT

Approved:

Phase: BID DOCUMENTS

Project Title: DAYTON NATIONAL CEMETERY GRAVESITE EXPANSION

Location: 4400 W THIRD ST, DAYTON, OH 45428

Issue Date: DECEMBER 5, 2025 | Checked: JD | Drawn: RJL

Project Number: 810CM3033

Building Number:

Drawing Number: LS121

2026-02-11 9:16:14 C:\Users\rlebell\Documents\18125 DNC Memorial Wall_R23_RJLabel4888.rvt

VA FORM 08 - 6231

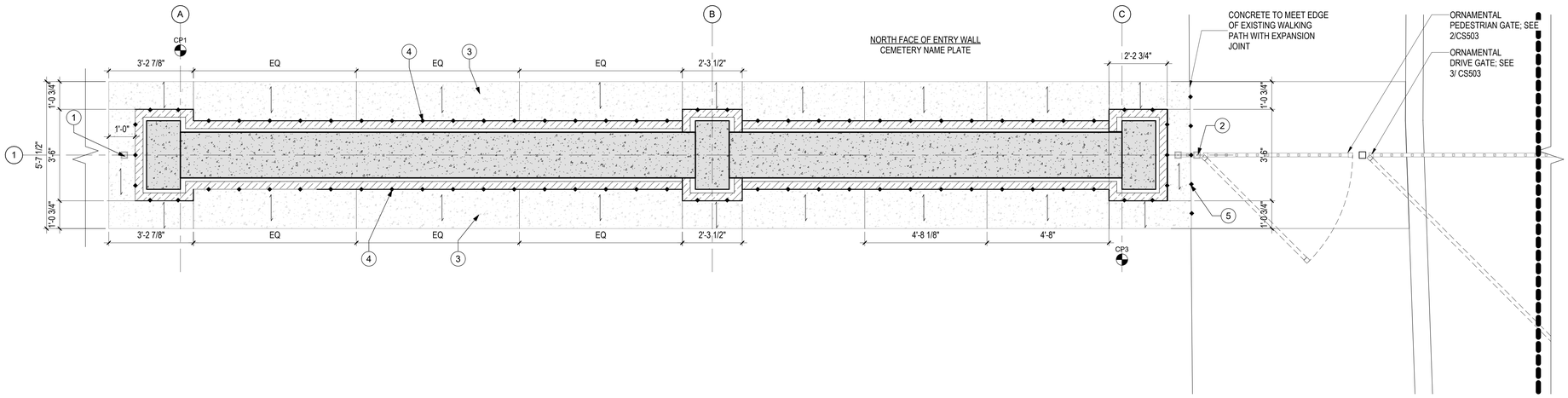

1 ENTRY WALL - FLATWORK LAYOUT PLAN - WEST WALL
1/2" = 1'-0"

0 2' 4' 8'

TRUE NORTH

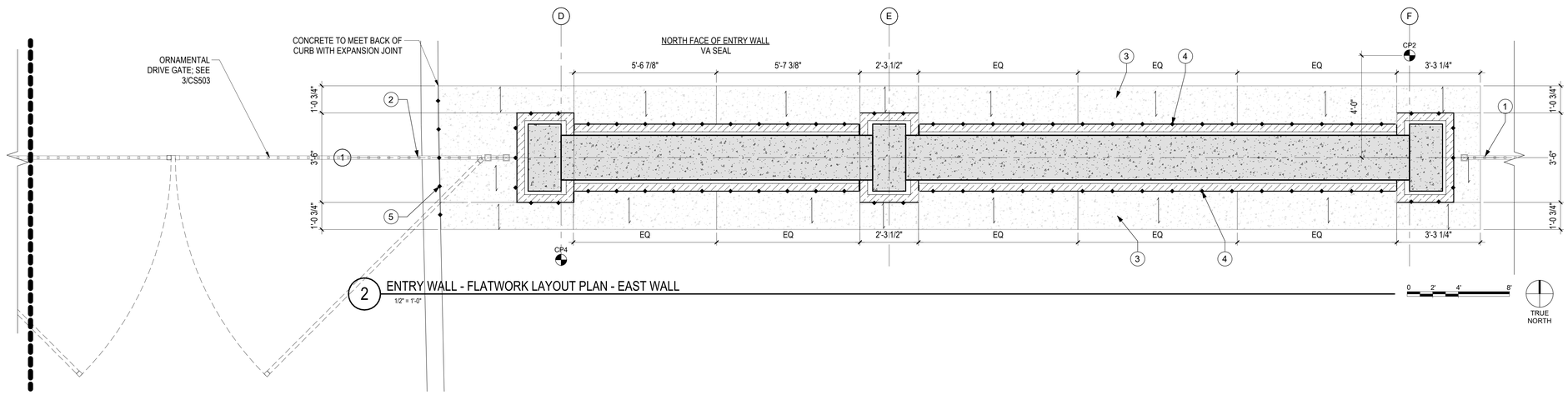

2 ENTRY WALL - FLATWORK LAYOUT PLAN - EAST WALL
1/2" = 1'-0"

0 2' 4' 8'

TRUE NORTH

LEGEND

- GRIDLINE
- CAST-IN-PLACE CONCRETE COLUMN (TOW = TOP OF WALL)
- CAST-IN-PLACE CONCRETE STEM WALLS (TSW = TOP OF STEM WALL)
- LIGHT DUTY CONCRETE PAVEMENT; SEE 5/CS504
- CONTROL JOINT; SEE 7/CS504
- EXPANSION JOINT; SEE 7/CS504
- BROOM DIRECTION
- THICKENED EDGE

GENERAL NOTES

1. IN THE EVENT OF ANY DISCREPANCIES BETWEEN THE CONTRACT DRAWING LAYOUT AND DIMENSIONING AND FIELD CONDITIONS NOTIFY ENGINEER IMMEDIATELY.
2. CONSTRUCTION/COLD JOINTS WHERE REQUIRED SHALL OCCURE AT CONTROL JOINT LOCATION(S) SHOWN ON PLAN. CONTRACTOR SHALL SUBMIT A PAVING SEQUENCE PLAN FOR REVIEW AND APPROVAL

KEYNOTES

#	Description
1	ORNAMENTAL FENCING; SEE 1/CS503
2	ORNAMENTAL SINGLE-SWING GATE TO BE CONNECTED TO DOUBLE-SWING VEHICULAR GATE; SEE 2/CS503
3	LANDSCAPE MAINTANACE EDGER, SEE 5/CS504
4	LANDSCAPE EDGER TO MEET ENTRY WALL WITH EXPANSION JOINT, SEE 7/CS504 & 5/LS502
5	LANDSCAPE EDGER TO MEET ENTRY CURB WITH EXPANSION JOINT, SEE 5 & 7/CS504

BID DOCUMENTS

Revisions:	Date:

CONSULTANTS

IRRIGATION:	GEOTECHNICAL:	COST ESTIMATING:
WATER IN MOTION, INC.	TERRACON	OCMI
175 JAMES AVENUE NORTH MINNEAPOLIS, MN 55405 952.229.1911	611 LUNKEN PARK DRIVE CINCINNATI, OHIO 45226 513.612.9020	2100 NORTH GREENVILLE AVENUE RICHARDSON, TEXAS 75082 469.431.0571
TIMOTHY MALOOLY	JEFF DUNLAP, PE	KYLE VEATER

ARCHITECT/ENGINEER OF RECORD

ANDERSON

13605 1st Ave. N. #100 Plymouth, MN 55441
P 763.412.4000 | F 763.412.4090 | ae-mn.com
Anderson Engineering of Minnesota, LLC | Proj # 18125

STAMP

Office of Design and Construction Services

VA U.S. Department of Veterans Affairs

Drawing Title	ENTRY WALL - FLATWORK LAYOUT PLAN
Phase	BID DOCUMENTS
Approved:	
Project Title	DAYTON NATIONAL CEMETERY GRAVESITE EXPANSION
Location	4400 W THIRD ST, DAYTON, OH 45428
Issue Date	DECEMBER 5, 2025
Checked	JAF
Drawn	RJL
Project Number	810CM3033
Building Number	
Drawing Number	LS122

2025-12-11 9:24:25 C:\Users\rlabelt\Documents\18125 DNC Entry Wall_R23_RJLabelt4888.rvt

VA FORM 08 - 6231