BURIAL LEGEND

IGC	IN-GROUND CREMAINS
PPC	PRE-PLACED CRYPTS
TRAD	DIRECT BURIAL TRADITIONAL
COL	COLUMBARIUM COURT
MW	MEMORIAL WALL

LEGEND

- PROPERTY LIMITS
- CONSTRUCTION LIMITS
- EXISTING ORNAMENTAL FENCE
- ORNAMENTAL FENCE
- HEADSTONE FACE DIRECTION
- ORNAMENTAL FENCE REPAIRS

INTERNMENT QUANTITIES

PHASE	GRAVESITES
GRAVESITE EXPANSION WITH FCA CORRECTIONS	
IGC	2,472
PPC	7,901
TRAD	75
COL	2,400
MW	154

KEY NOTES

1. START AND END LOCATIONS FOR FENCE REPAIRS SHALL BE VERIFIED BY THE CONTRACTOR.

NOTES

1. ALL PERIMETER FENCING REPAIRS AT OR NEAR THE VA MEDICAL CENTER AND NATIONAL CEMETERY BOUNDARY SHALL BE COORDINATED PRIOR TO COMMENCING ANY FENCING ACTIVITIES.

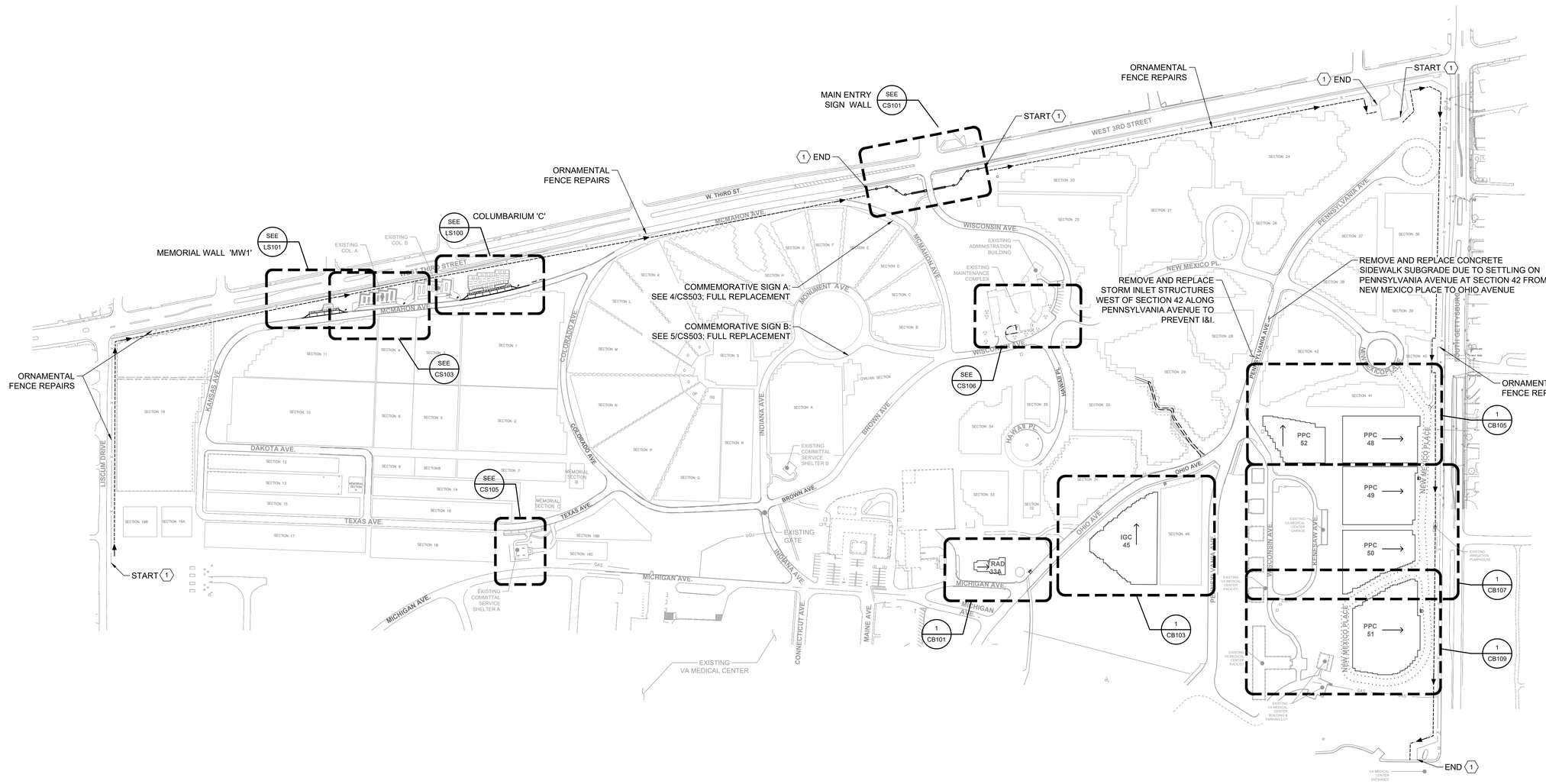

1 OVERALL SITE PLAN
SCALE: 1"=150'

BID DOCUMENTS

Revisions:	Date:

CONSULTANTS

IRRIGATION	GEOTECHNICAL	COST ESTIMATING
WATER IN MOTION, INC.	**TERRACON**	**OCMI**
175 James Avenue North Minneapolis, MN 55405 952.229.1911	611 Lunken Park Drive Cincinnati, Ohio 45226 513.612.9020	2100 North Greenville Ave. Richardson, Texas 75082 469.431.0571
TIMOTHY MALOOLY	**JEFF DUNLAP, PE**	**KYLE VEATER**

ARCHITECT/ENGINEER OF RECORD

ANDERSON

13605 1st Ave. N. #100 Plymouth, MN 55441
P 763.412.4000 | F 763.412.4090 | ae-mn.com
Anderson Engineering of Minnesota, LLC | Proj # 18125

STAMP

STATE OF OHIO — ADAM THIELE — E-92244 — REGISTERED PROFESSIONAL ENGINEER

Office of Design and Construction Services

VA U.S. Department of Veterans Affairs

Drawing Title: SITE PLAN - OVERALL	Phase: BID DOCUMENTS
Approved: Project Director	

Project Title: DAYTON NATIONAL CEMETERY GRAVESITE EXPANSION		Project Number: 810-CM3-033
		Building Number: --
Location: 4400 W THIRD ST, DAYTON, OH 45428		Drawing Number: CS100
Issue Date: FEBRUARY 5, 2026	Checked: JAF	Drawn: BJN
		34 of 160

File Path: y:\18\18025\18125 va rca\ridwell - dayton national cemetery - dayton ohio_07 civil_01 cad files_01 sheets\18125_c_ske.dwg | aoft.stanson | saved:2/2/2026 11:39 AM

VA FORM 08 - 6231

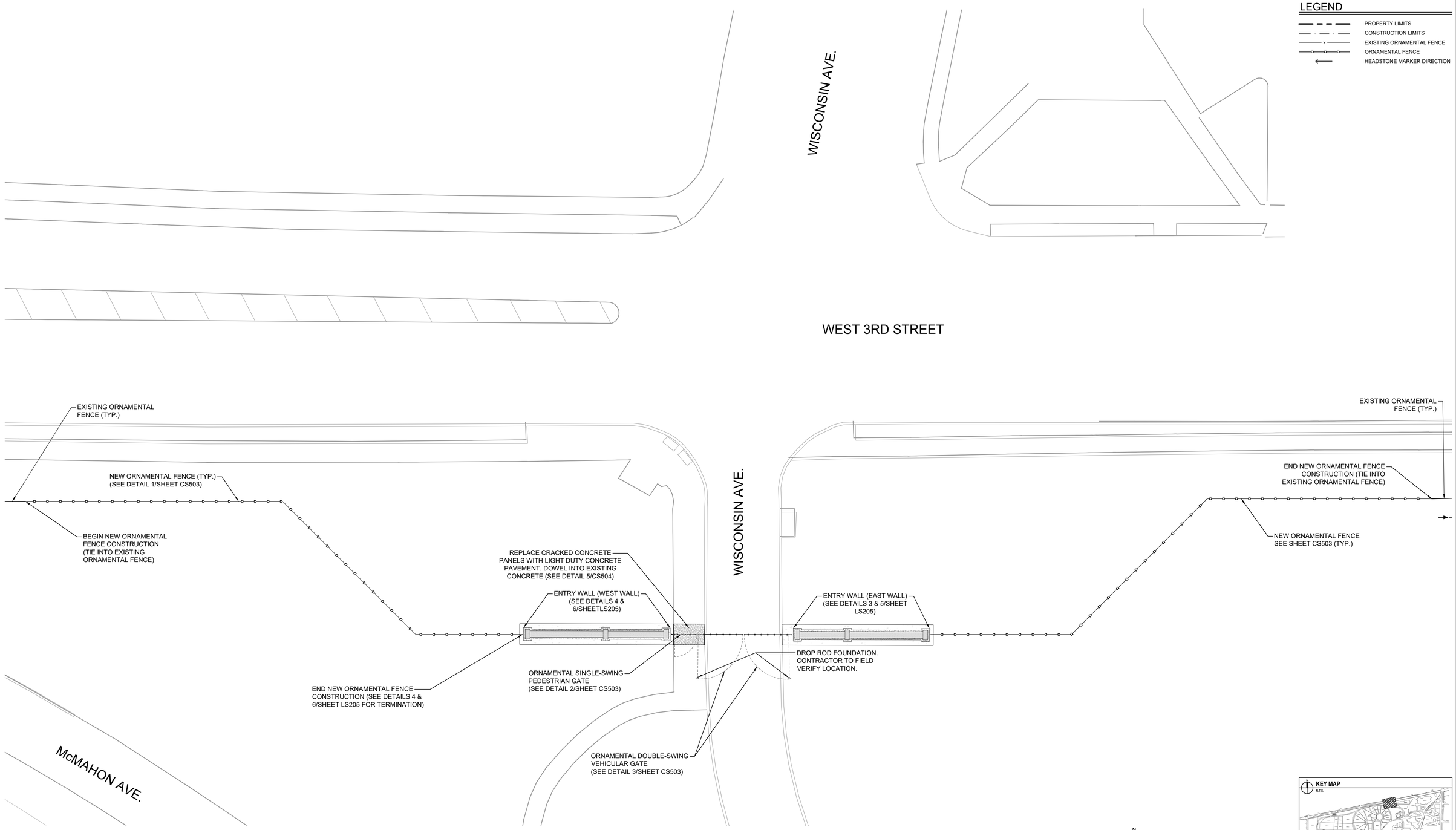

1 SITE PLAN - FENCING ENLARGEMENT
SCALE: 1"=10'

BID DOCUMENTS

Revisions:	Date:

CONSULTANTS

IRRIGATION	GEOTECHNICAL	COST ESTIMATING
WATER IN MOTION, INC.	**TERRACON**	**OCMI**
175 James Avenue North Minneapolis, MN 55405 952.229.1911	611 Lunken Park Drive Cincinnati, Ohio 45226 513.612.9020	2100 North Greenville Ave. Richardson, Texas 75082 469.431.0571
TIMOTHY MALOOLY	**JEFF DUNLAP, PE**	**KYLE VEATER**

ARCHITECT/ENGINEER OF RECORD

ANDERSON

13605 1st Ave. N. #100 Plymouth, MN 55441
P 763.412.4000 | F 763.412.4090 | ae-mn.com
Anderson Engineering of Minnesota, LLC | Proj # 18125

STAMP
STATE OF OHIO
ADAM THIELE
E-92244
REGISTERED PROFESSIONAL ENGINEER

Office of Design and Construction Services

VA U.S. Department of Veterans Affairs

Drawing Title	Phase	Project Title	Project Number
SITE PLAN - ENTRANCE	BID DOCUMENTS	DAYTON NATIONAL CEMETERY GRAVESITE EXPANSION	810-CM3-033
Approved: Project Director		Location: 4400 W THIRD ST, DAYTON, OH 45428	Building Number: --
		Issue Date: FEBRUARY 5, 2026 / Checked: JAF / Drawn: BJN	Drawing Number: CS101

35 of 160

File Path: y:\18100\18125 va nca midwest - dayton national cemetery - dayton ohio_07 civil_01 cad files_01 sheets\18125_c_site.dwg | edit:slanson | saved:2/2/2026 11:39 AM

VA FORM 08 - 6231

LEGEND

- PROPERTY LIMITS
- CONSTRUCTION LIMITS
- EXISTING ORNAMENTAL FENCE
- ORNAMENTAL FENCE
- HEADSTONE FACE DIRECTION

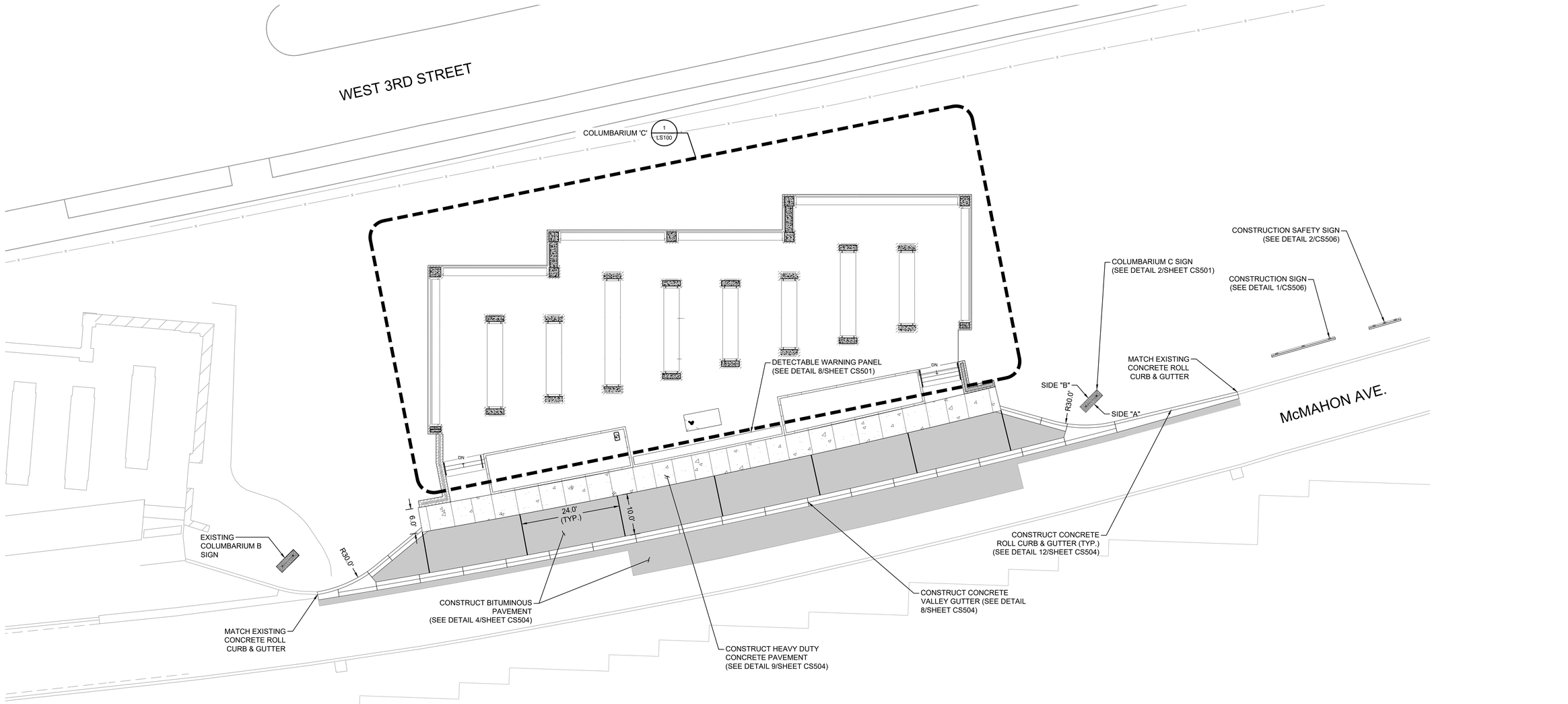

1 SITE PLAN - COLUMBARIUM C
SCALE: 1"=10'

N

0 10' 20'

KEY MAP
N.T.S.

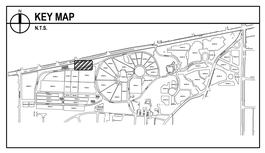

BID DOCUMENTS

Revisions:	Date:

CONSULTANTS

IRRIGATION	GEOTECHNICAL	COST ESTIMATING
WATER IN MOTION, INC.	**TERRACON**	**OCMI**
175 James Avenue North Minneapolis, MN 55405 952.229.1911	611 Lunken Park Drive Cincinnati, Ohio 45226 513.612.9020	2100 North Greenville Ave. Richardson, Texas 75082 469.431.0571
TIMOTHY MALOOLY	**JEFF DUNLAP, PE**	**KYLE VEATER**

ARCHITECT/ENGINEER OF RECORD

ANDERSON

13605 1st Ave. N. #100 Plymouth, MN 55441
P 763.412.4000 | F 763.412.4090 | ae-mn.com
Anderson Engineering of Minnesota, LLC | Proj # 18125

STAMP

STATE OF OHIO
ADAM THIELE
E-92244
REGISTERED
PROFESSIONAL ENGINEER

Office of Design and Construction Services

VA U.S. Department of Veterans Affairs

Drawing Title	Phase	Project Title	Project Number
SITE PLAN - COLUMBARIUM C	BID DOCUMENTS	DAYTON NATIONAL CEMETERY GRAVESITE EXPANSION	810-CM3-033
Approved: Project Director		Location: 4400 W THIRD ST, DAYTON, OH 45428	Building Number: --
		Issue Date: FEBRUARY 5, 2026 / Checked: -- / Drawn: --	Drawing Number: CS102

36 of 160

File Path: y:\18100\18125 va nca midwest - dayton national cemetery - dayton ohio_07 civil_01 cad files_01 sheets\18125_c_site.dwg | edit:sianson | saved:2/2/2026 11:39 AM

VA FORM 08 - 6231

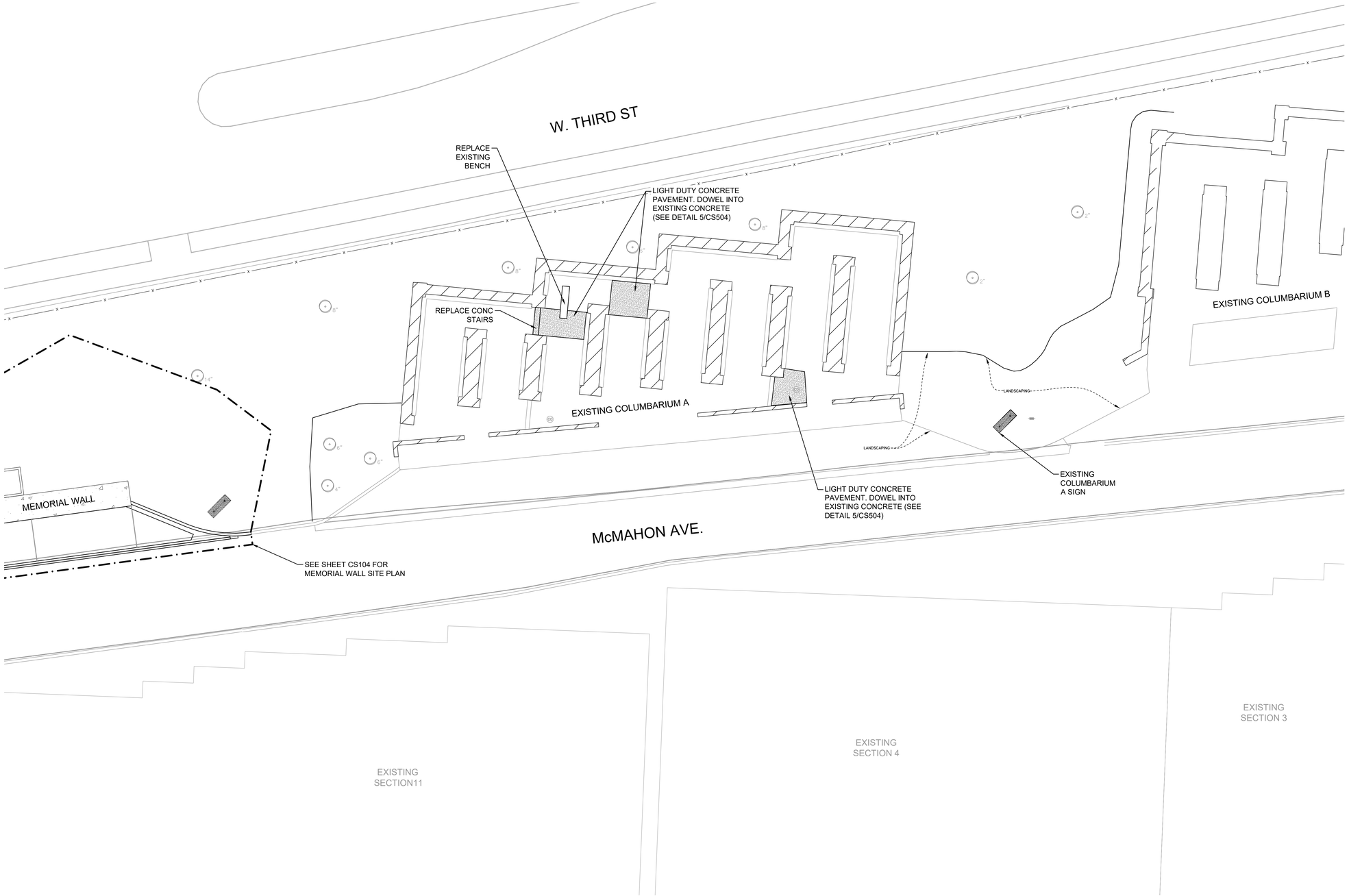

LEGEND

- PROPERTY LIMITS
- CONSTRUCTION LIMITS
- EXISTING ORNAMENTAL FENCE
- ORNAMENTAL FENCE
- HEADSTONE FACE DIRECTION

1 COLUMBARIUM A
SCALE: 1"=10'

N

0 10' 20'

KEY MAP
N.T.S.

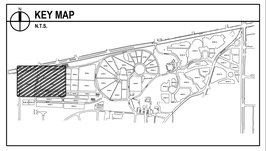

BID DOCUMENTS

Revisions:	Date:

CONSULTANTS

IRRIGATION	GEOTECHNICAL	COST ESTIMATING
WATER IN MOTION, INC.	**TERRACON**	**OCMI**
175 James Avenue North Minneapolis, MN 55405 952.229.1911	611 Lunken Park Drive Cincinnati, Ohio 45226 513.612.9020	2100 North Greenville Ave. Richardson, Texas 75082 469.431.0571
TIMOTHY MALOOLY	**JEFF DUNLAP, PE**	**KYLE VEATER**

ARCHITECT/ENGINEER OF RECORD

ANDERSON

13605 1st Ave. N. #100 Plymouth, MN 55441
P 763.412.4000 | F 763.412.4090 | ae-mn.com
Anderson Engineering of Minnesota, LLC | Proj # 18125

STAMP

STATE OF OHIO
ADAM THIELE
E-92244
REGISTERED PROFESSIONAL ENGINEER

Office of Design and Construction Services

VA U.S. Department of Veterans Affairs

Drawing Title	Phase	Project Title	Project Number
SITE PLAN - COLUMBARIUM A	BID DOCUMENTS	DAYTON NATIONAL CEMETERY GRAVESITE EXPANSION	810-CM3-033
Approved: Project Director		Location: 4400 W THIRD ST, DAYTON, OH 45428	Building Number: --
		Issue Date: FEBRUARY 5, 2026 / Checked: LRK / Drawn: MAM	Drawing Number: CS103

37 of 160

File Path: y:\18100\18125 va nca midwest - dayton national cemetery - dayton ohio_07 civil_01 cad files_01 sheets\18125_c_fca-fixes.dwg | edit:alarson | saved:2/2/2026 11:00 AM

VA FORM 08 - 6231

LEGEND

- PROPERTY LIMITS
- CONSTRUCTION LIMITS
- EXISTING ORNAMENTAL FENCE
- ORNAMENTAL FENCE
- HEADSTONE FACE DIRECTION

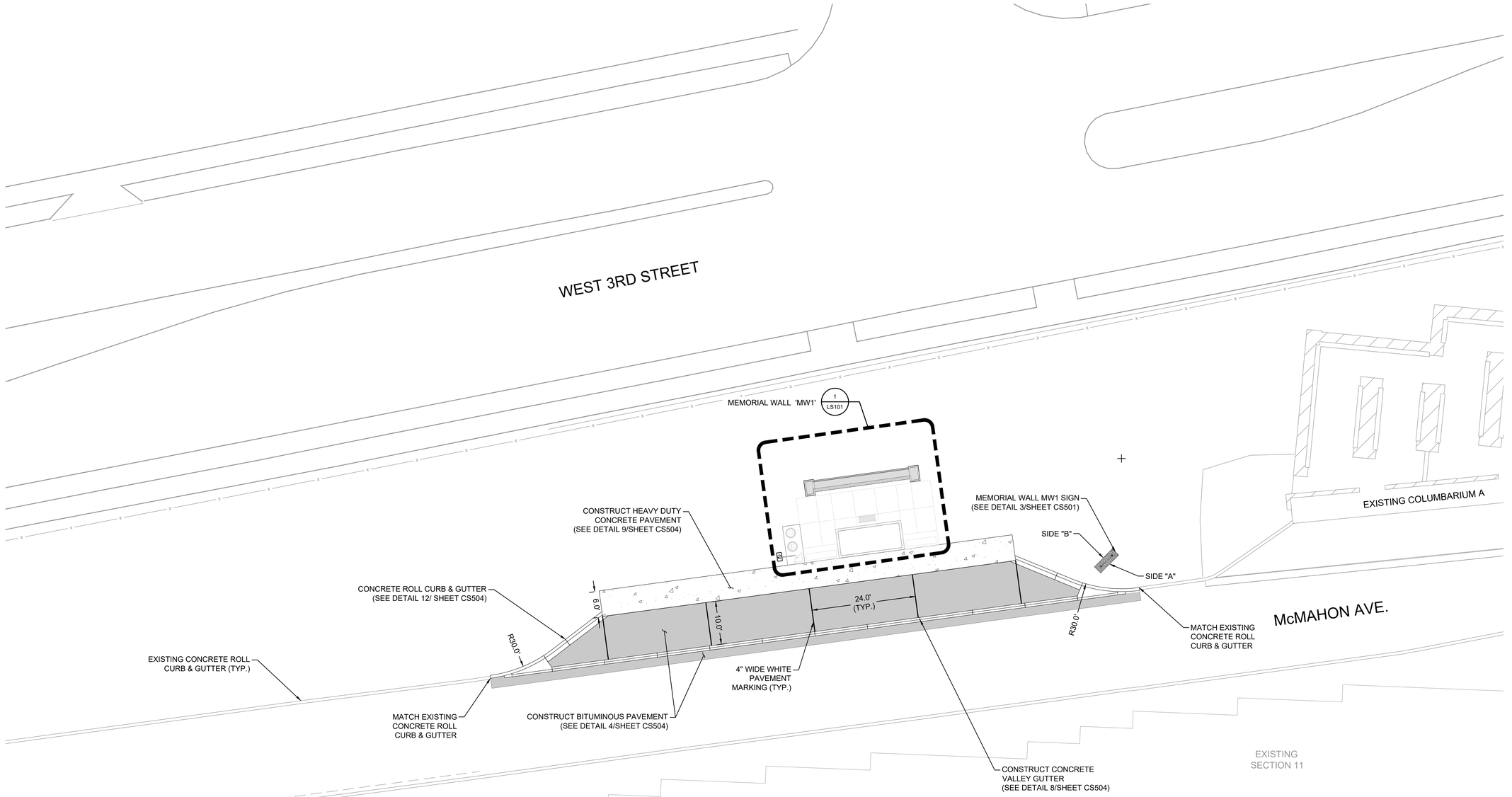

1 SITE PLAN - MEMORIAL WALL
SCALE:1"=10'

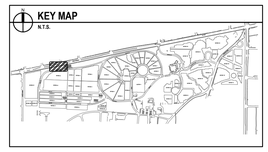

BID DOCUMENTS

Revisions:	Date:

CONSULTANTS

IRRIGATION	GEOTECHNICAL	COST ESTIMATING
WATER IN MOTION, INC.	**TERRACON**	**OCMI**
175 James Avenue North Minneapolis, MN 55405 952.229.1911	611 Lunken Park Drive Cincinnati, Ohio 45226 513.612.9020	2100 North Greenville Ave. Richardson, Texas 75082 469.431.0571
TIMOTHY MALOOLY	**JEFF DUNLAP, PE**	**KYLE VEATER**

ARCHITECT/ENGINEER OF RECORD

ANDERSON

13605 1st Ave. N. #100 Plymouth, MN 55441
P 763.412.4000 | F 763.412.4090 | ae-mn.com
Anderson Engineering of Minnesota, LLC | Proj # 18125

STAMP

STATE OF OHIO
ADAM THIELE
E-92244
REGISTERED PROFESSIONAL ENGINEER

Office of Design and Construction Services

VA U.S. Department of Veterans Affairs

Drawing Title	Phase	Project Title	Project Number
SITE PLAN - MEMORIAL WALL	BID DOCUMENTS	DAYTON NATIONAL CEMETERY GRAVESITE EXPANSION	810-CM3-033
Approved: Project Director		Location: 4400 W THIRD ST, DAYTON, OH 45428	Building Number: --
		Issue Date: FEBRUARY 5, 2026 / Checked: -- / Drawn: --	Drawing Number: CS104 --- OF 159

File Path: y:\18100\18125 va nca midwest - dayton national cemetery - dayton ohio_07 civil_01 cad files_01 sheets\18125_c_site.dwg | edit:jahrenkamp | saved:2/11/2026 5:34 PM

VA FORM 08 - 6231

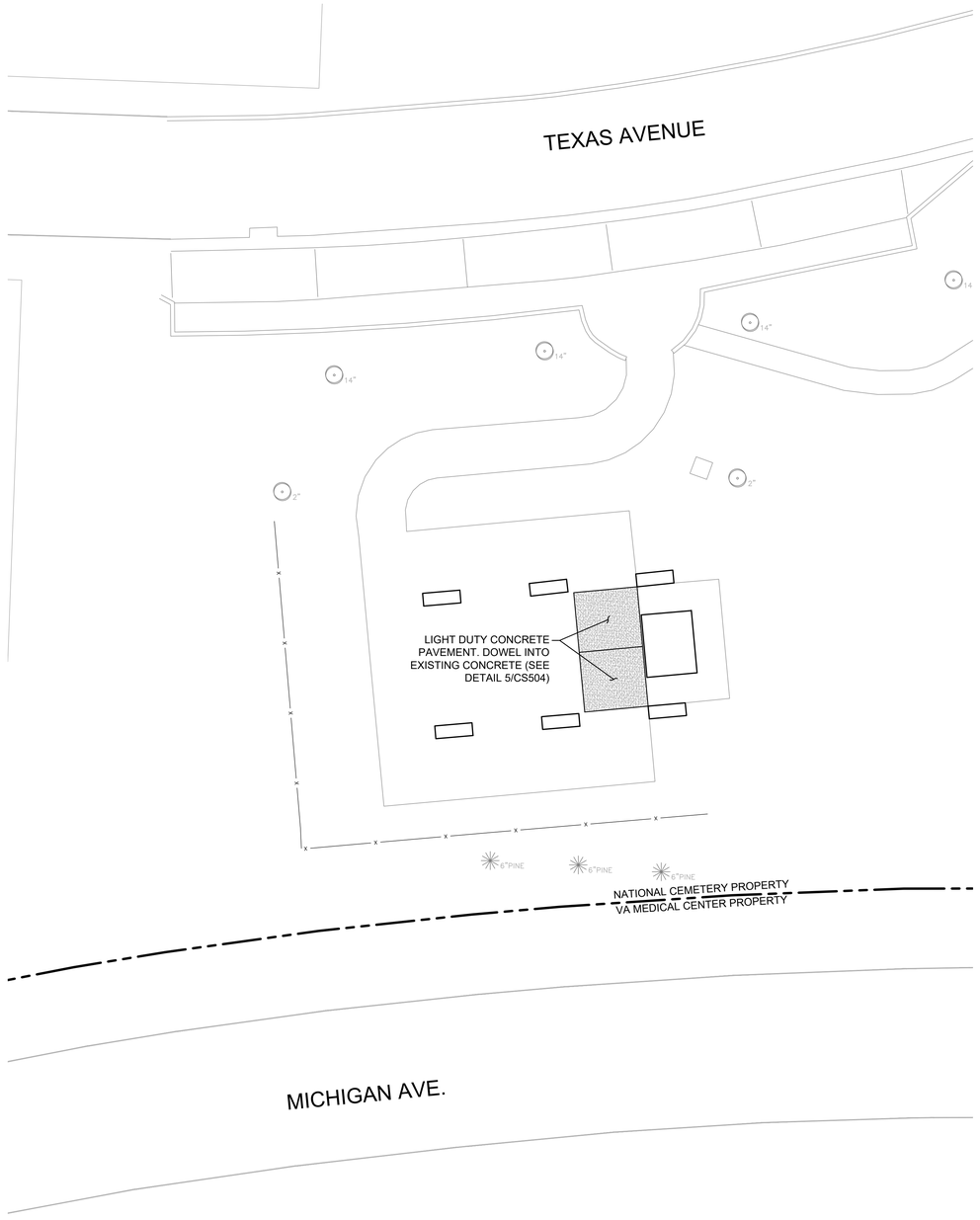

LEGEND

- PROPERTY LIMITS
- CONSTRUCTION LIMITS
- EXISTING ORNAMENTAL FENCE
- ORNAMENTAL FENCE
- HEADSTONE FACE DIRECTION

1 COMMITAL SHELTER A
SCALE: 1"=10'

N

0 10' 20'

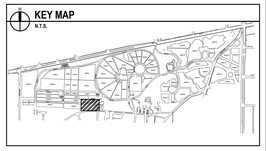

BID DOCUMENTS

Revisions:	Date:

CONSULTANTS

IRRIGATION	GEOTECHNICAL	COST ESTIMATING
WATER IN MOTION, INC.	**TERRACON**	**OCMI**
175 James Avenue North Minneapolis, MN 55405 952.229.1911	611 Lunken Park Drive Cincinnati, Ohio 45226 513.612.9020	2100 North Greenville Ave. Richardson, Texas 75082 469.431.0571
TIMOTHY MALOOLY	**JEFF DUNLAP, PE**	**KYLE VEATER**

ARCHITECT/ENGINEER OF RECORD

ANDERSON

13605 1st Ave. N. #100 Plymouth, MN 55441
P 763.412.4000 | F 763.412.4090 | ae-mn.com
Anderson Engineering of Minnesota, LLC | Proj # 18125

STAMP

STATE OF OHIO
ADAM THIELE
E-92244
REGISTERED PROFESSIONAL ENGINEER

Office of Design and Construction Services

VA U.S. Department of Veterans Affairs

Drawing Title	Phase	Project Title	Project Number
SITE PLAN - COMMITTAL SHELTER A	BID DOCUMENTS	DAYTON NATIONAL CEMETERY GRAVESITE EXPANSION	810-CM3-033
Approved: Project Director		Location: 4400 W THIRD ST, DAYTON, OH 45428	Building Number: --
		Issue Date: FEBRUARY 5, 2026 / Checked: LRK / Drawn: MAM	Drawing Number: CS105

39 of 160

File Path: y:\18100\18125 va nca midwest - dayton national cemetery - dayton ohio_07 civil_01 cad files_01 sheets\18125_c_fca-fixes.dwg | edit:alarson | saved:2/2/2026 11:00 AM

VA FORM 08 - 6231

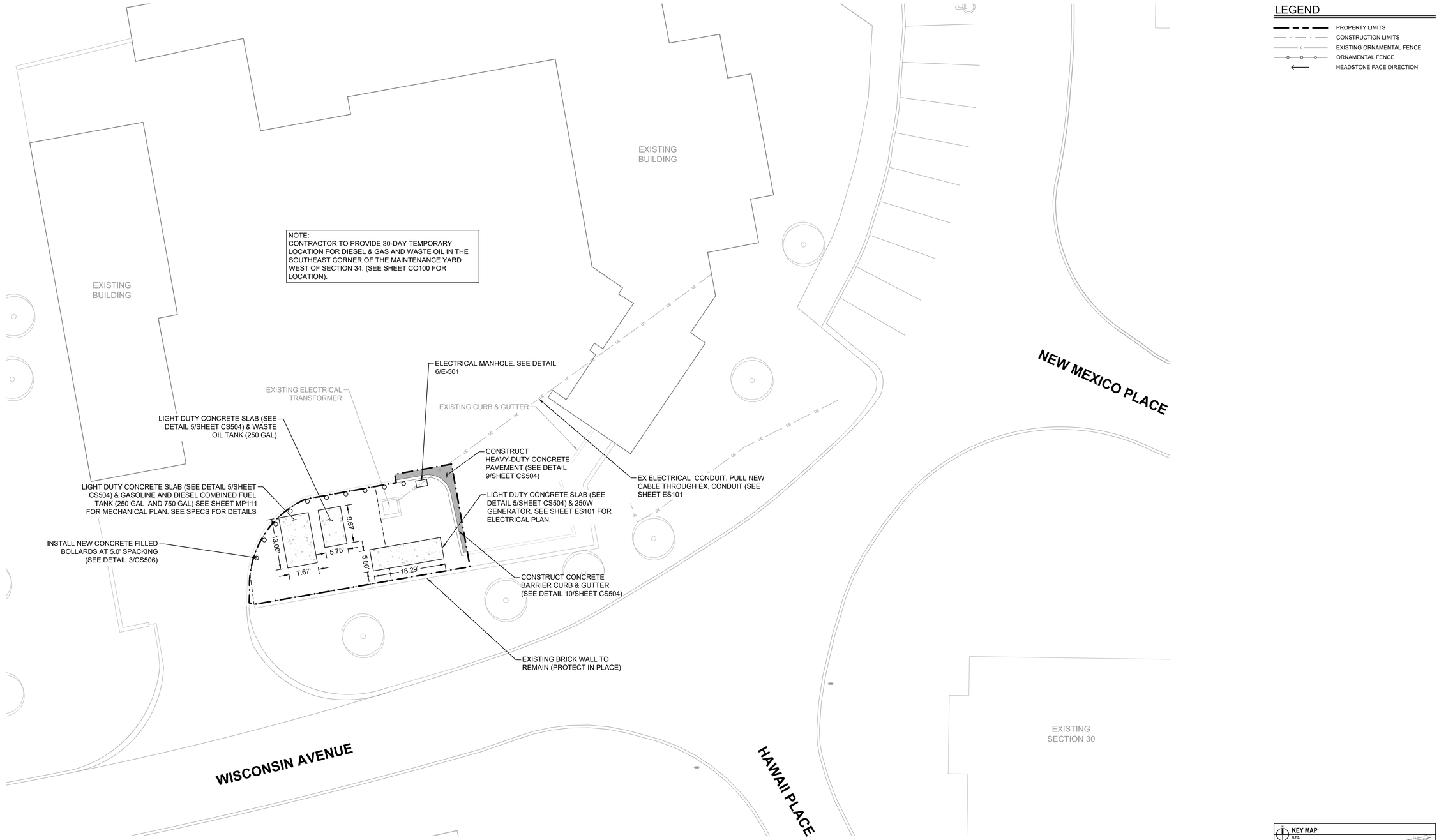

1 FUEL TANK
SCALE:1"=10'

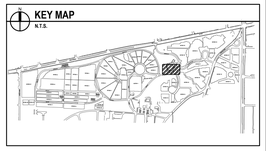

BID DOCUMENTS

Revisions:	Date:

CONSULTANTS

IRRIGATION	GEOTECHNICAL	COST ESTIMATING
WATER IN MOTION, INC.	**TERRACON**	**OCMI**
175 James Avenue North Minneapolis, MN 55405 952.229.1911	611 Lunken Park Drive Cincinnati, Ohio 45226 513.612.9020	2100 North Greenville Ave. Richardson, Texas 75082 469.431.0571
TIMOTHY MALOOLY	**JEFF DUNLAP, PE**	**KYLE VEATER**

ARCHITECT/ENGINEER OF RECORD

ANDERSON

13605 1st Ave. N. #100 Plymouth, MN 55441
P 763.412.4000 | F 763.412.4090 | ae-mn.com
Anderson Engineering of Minnesota, LLC | Proj # 18125

STAMP

STATE OF OHIO
ADAM THIELE
E-92244
REGISTERED
PROFESSIONAL ENGINEER

Office of Design and Construction Services

VA U.S. Department of Veterans Affairs

Drawing Title	Phase	Project Title	Project Number
SITE PLAN - ADMIN BUILDING	BID DOCUMENTS	DAYTON NATIONAL CEMETERY GRAVESITE EXPANSION	810-CM3-033
Approved: Project Director		Location: 4400 W THIRD ST, DAYTON, OH 45428	Building Number: --
		Issue Date: FEBRUARY 5, 2026 / Checked: -- / Drawn: --	Drawing Number: CS106

40 of 160

File Path: y:\18100\18125 va nca midwest - dayton national cemetery - dayton ohio_07 civil_01 cad files_01 sheets\18125_c_fca-fixes.dwg | edit:sharson | saved:2/2/2026 11:00 AM

VA FORM 08 - 6231

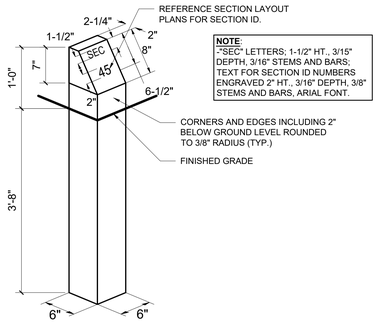

1 GRANITE SECTION MARKER
SCALE: N.T.S.

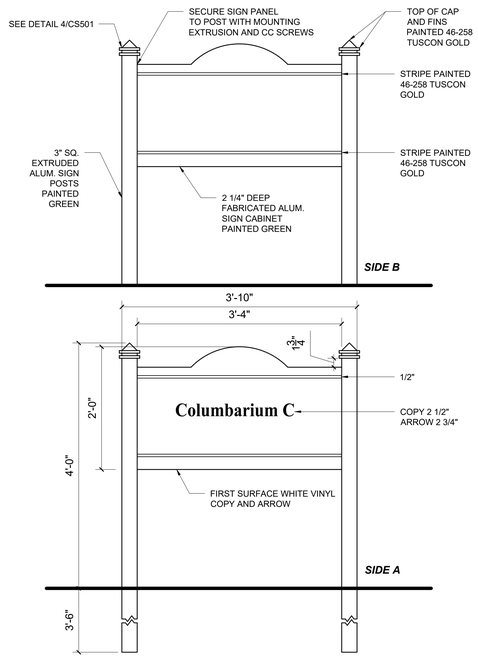

2 COLUMBARIUM C SIGN
SCALE: N.T.S.

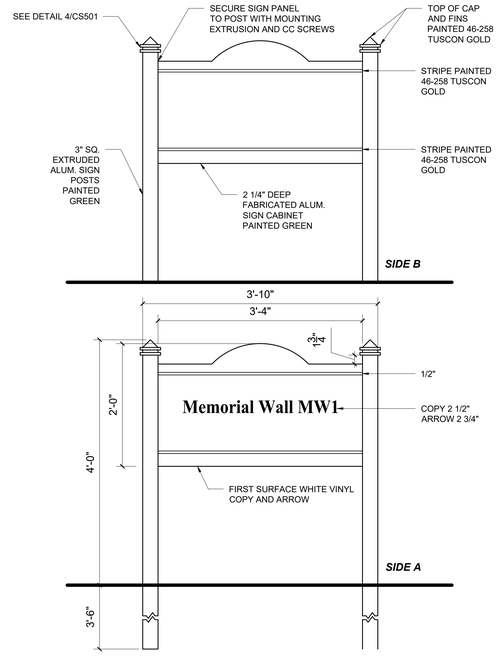

3 MEMORIAL WALL MW1 SIGN
SCALE: N.T.S.

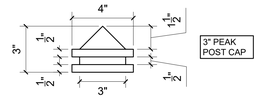

4 SIGN POST CAP DETAIL
SCALE: N.T.S.

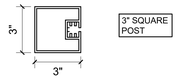

5 SIGN POST DETAIL
SCALE: N.T.S.

6 SIGN POST HARDWARE DETAIL
SCALE: N.T.S.

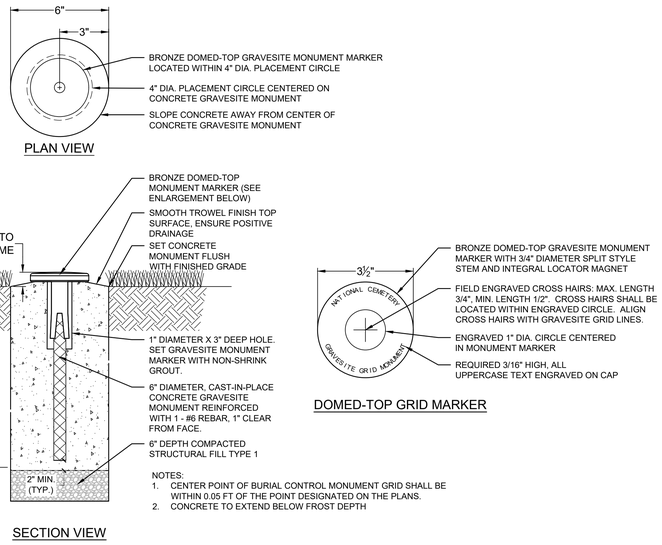

7 GRAVESITE GRID MONUMENT
SCALE: N.T.S.

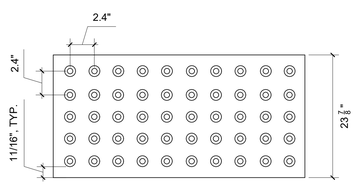

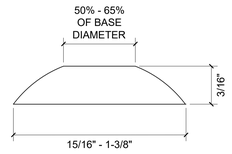

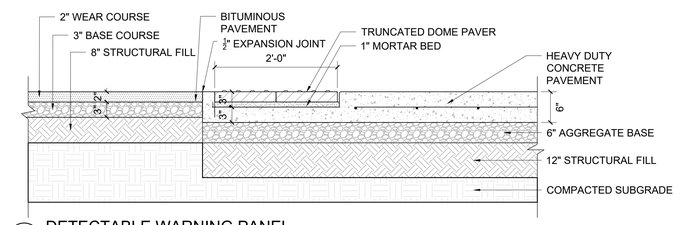

8 DETECTABLE WARNING PANEL
SCALE: N.T.S.

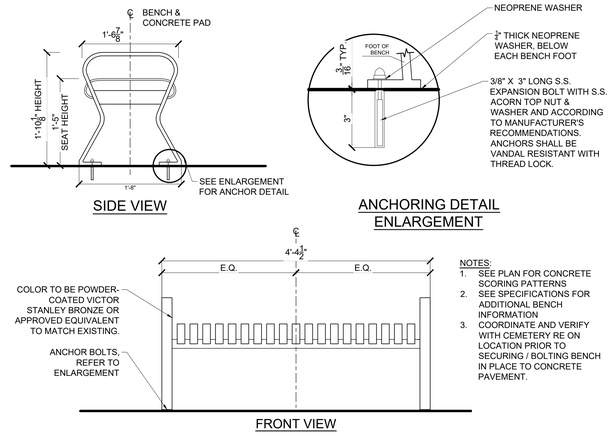

9 BENCH
SCALE: N.T.S.

BID DOCUMENTS

Revisions:	Date:

CONSULTANTS

IRRIGATION	GEOTECHNICAL	COST ESTIMATING
WATER IN MOTION, INC.	**TERRACON**	**OCMI**
175 James Avenue North Minneapolis, MN 55405 952.229.1911	611 Lunken Park Drive Cincinnati, Ohio 45226 513.612.9020	2100 North Greenville Ave. Richardson, Texas 76082 469.431.0571
TIMOTHY MALOOLY	**JEFF DUNLAP, PE**	**KYLE VEATER**

ARCHITECT/ENGINEER OF RECORD

ANDERSON

13605 1st Ave. N. #100 Plymouth, MN 55441
P 763.412.4000 | F 763.412.4090 | ae-mn.com
Anderson Engineering of Minnesota, LLC | Proj # 18125

STAMP

STATE OF OHIO
ADAM THIELE
E-92244
REGISTERED
PROFESSIONAL ENGINEER

Office of Design and Construction Services

VA U.S. Department of Veterans Affairs

Drawing Title: SITE DETAILS - 1	Phase: BID DOCUMENTS
Approved: Project Director	

Project Title: DAYTON NATIONAL CEMETERY GRAVESITE EXPANSION		Project Number: 810-CM3-033
		Building Number: --
Location: 4400 W THIRD ST, DAYTON, OH 45428		Drawing Number: CS501
Issue Date: FEBRUARY 5, 2026	Checked: JAF / Drawn: BJN	41 of 160

File Path: y:\18100\18125 va mca midwest - dayton national cemetery - dayton ohio_07 civil_01 cad files_01 sheets\18125_c_sds.dwg | edit:clarkson | saved:2/2/2026 11:39 AM

VA FORM 08 - 6231

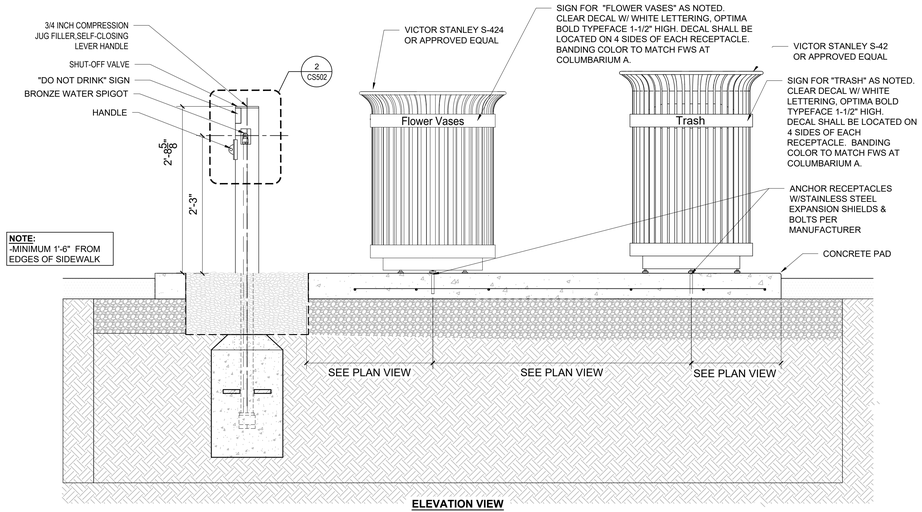

ELEVATION VIEW

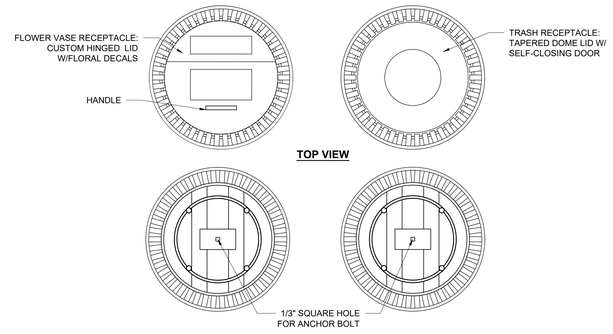

TOP VIEW

BOTTOM VIEW

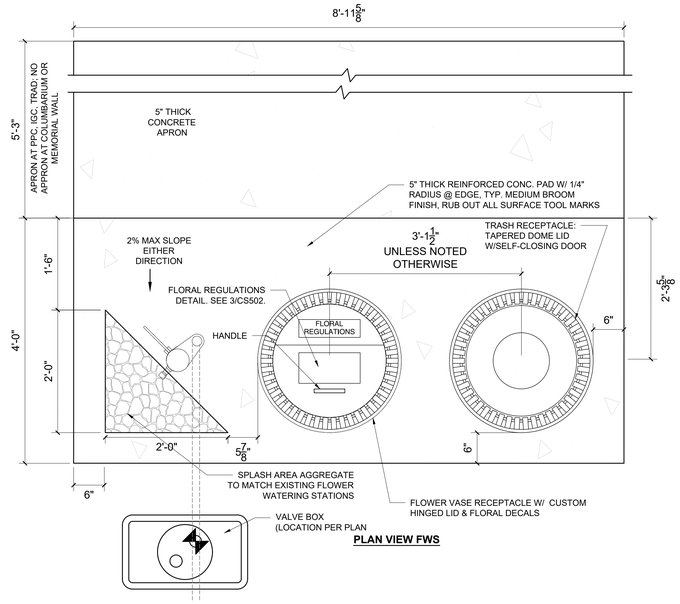

PLAN VIEW FWS

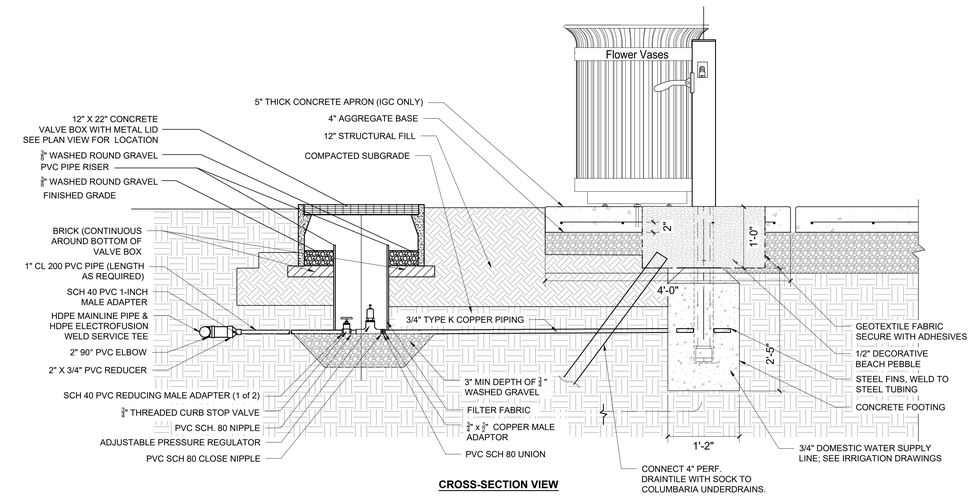

CROSS-SECTION VIEW

1 FLOWER WATER STATION
SCALE: N.T.S.

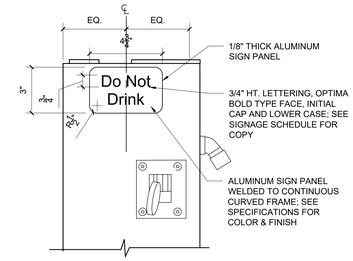

2 DO NOT DRINK SIGN
SCALE: N.T.S.

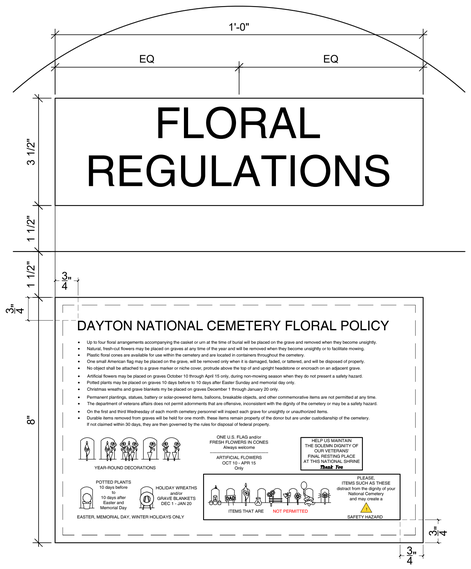

NOTE: FINAL LANGUAGE SHALL BE REVIEWED AND APPROVED BY CEMETERY.

3 FLORAL REGULATIONS DECALS
SCALE: N.T.S.

BID DOCUMENTS

Revisions:	Date:

CONSULTANTS

IRRIGATION	GEOTECHNICAL	COST ESTIMATING
WATER IN MOTION, INC.	**TERRACON**	**OCMI**
175 James Avenue North Minneapolis, MN 55405 952.229.1911	611 Lurken Park Drive Cincinnati, Ohio 45226 513.612.9020	2100 North Greenville Ave. Richardson, Texas 75082 469.431.0571
TIMOTHY MALOOLY	**JEFF DUNLAP, PE**	**KYLE VEATER**

ARCHITECT/ENGINEER OF RECORD

ANDERSON

13605 1st Ave. N. #100 Plymouth, MN 55441
P 763.412.4000 | F 763.412.4090 | ae-mn.com
Anderson Engineering of Minnesota, LLC | Proj # 18125

STAMP

STATE OF OHIO · ADAM THIELE · E-92244 · REGISTERED PROFESSIONAL ENGINEER

Office of Design and Construction Services

VA U.S. Department of Veterans Affairs

Drawing Title: SITE DETAILS - 2	Phase: BID DOCUMENTS	Project Title: DAYTON NATIONAL CEMETERY GRAVESITE EXPANSION	Project Number: 810-CM3-033
Approved: Project Director		Location: 4400 W THIRD ST, DAYTON, OH 45428	Building Number: --
		Issue Date: FEBRUARY 5, 2026 / Checked: JAF / Drawn: BJN	Drawing Number: CS502 37 OF 159

VA FORM 08 - 6231

File Path: y:\18100\18125 va nca mhdwest - dayton national cemetery - dayton ohio_07 civil_01 cad files_01 sheets\18125_c_site.dwg | xref:J:\shared\xrefs\ltr | saved:2/11/2026 5:34 PM

ORNAMENTAL FENCE NOTE:
1. ALL ORNAMENTAL FENCE COMPONENTS, HARDWARE AND FASTENERS SHALL BE POWDER-COATED OR ELECTRO-DEPOSITION COATED WELDED STEEL; COLOR: BRONZE
2. SEE SPECIFICATIONS FOR MORE INFORMATION

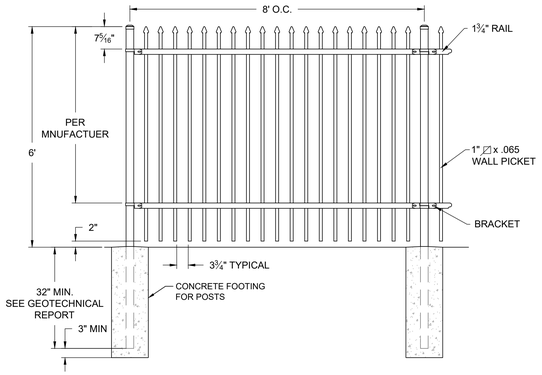

1 ORNAMENTAL FENCING PANEL DETAIL
SCALE: NTS

ORNAMENTAL FENCE NOTE:
1. ALL ORNAMENTAL FENCE COMPONENTS, HARDWARE AND FASTENERS SHALL BE POWDER-COATED OR ELECTRO-DEPOSITION COATED WELDED STEEL; COLOR: BRONZE
2. SEE SPECIFICATIONS FOR MORE INFORMATION

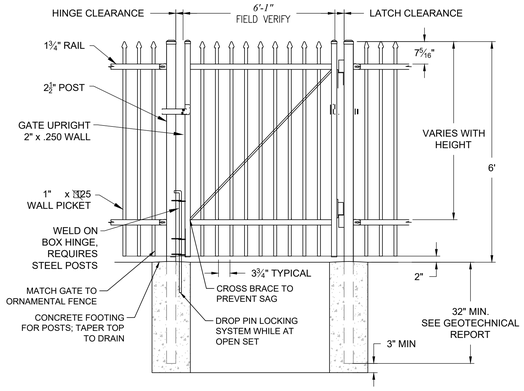

2 ORNAMENTAL SINGLE-SWING PEDESTRIAN GATE
SCALE: NTS

ORNAMENTAL FENCE NOTE:
1. ALL ORNAMENTAL FENCE COMPONENTS, HARDWARE AND FASTENERS SHALL BE POWDER-COATED OR ELECTRO-DEPOSITION COATED WELDED STEEL; COLOR: BRONZE
2. SEE SPECIFICATIONS FOR MORE INFORMATION

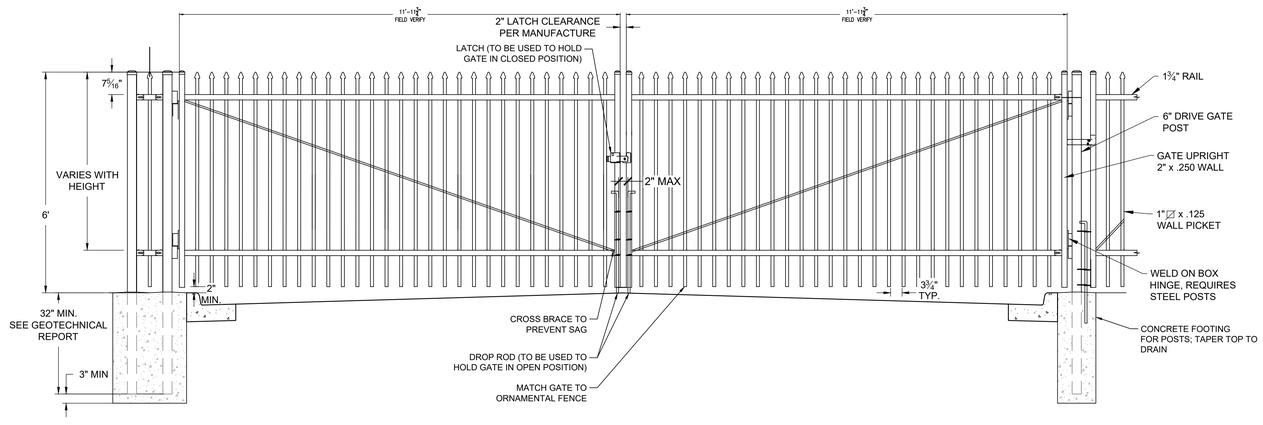

3 ORNAMENTAL DOUBLE-SWING VEHICULAR GATE
SCALE: NTS

COMMEMORATIVE SIGN A:

1. ALL MEASUREMENTS ARE APPROXIMATE; CONTRACTOR SHALL VERIFIED IN FIELD.
2. APPROXIMATE MEASUREMENTS ARE AS FOLLOWS:
   2.1. FRAME HEIGHT – 50" (FROM GROUND TO TOP OF SIGN)
   2.2. WIDTH OF SIGN- 41
   2.3. HEIGHT OF SIGN PANEL- 24"
3. FULL REPLACEMENT INCLUDING METAL FRAME, FOOTING AND SIGN PANEL.
   3.1. FRAME AND FOOTING TO MATCH EXISTING COMMEMORATIVE B (SEE VA SIGNAGE DESIGN GUIDE)
4. COORDINATE WITH NCA/VA AND NCA/VA HISTORIAN FOR GRAPHIC CONTENT ON PANEL.
5. SUBMIT SHOP DRAWINGS FOR APPROVAL.

4 COMMEMORATIVE SIGN A
SCALE: N.T.S.

COMMEMORATIVE SIGN B

1. ALL MEASUREMENTS ARE APPROXIMATE; CONTRACTOR SHALL VERIFIED IN FIELD.
2. APPROXIMATE MEASUREMENTS ARE AS FOLLOWS:
   2.1. FRAME HEIGHT – 50" (FROM GROUND TO TOP OF SIGN)
   2.2. WIDTH OF SIGN- 41
   2.3. HEIGHT OF SIGN PANEL- 24"
3. FULL REPLACEMENT INCLUDING METAL FRAME, FOOTING AND SIGN PANEL.
   3.1. FRAME AND FOOTING TO MATCH EXISTING COMMEMORATIVE B (SEE VA SIGNAGE DESIGN GUIDE)
4. COORDINATE WITH NCA/VA AND NCA/VA HISTORIAN FOR GRAPHIC CONTENT ON PANEL.
5. SUBMIT SHOP DRAWINGS FOR APPROVAL.

5 COMMEMORATIVE SIGN B
SCALE: N.T.S.

BID DOCUMENTS

Revisions:	Date:

CONSULTANTS

IRRIGATION	GEOTECHNICAL	COST ESTIMATING
WATER IN MOTION, INC.	**TERRACON**	**OCMI**
175 James Avenue North Minneapolis, MN 55405 952.229.1911	611 Lunken Park Drive Cincinnati, Ohio 45226 513.612.9020	2100 North Greenville Ave. Richardson, Texas 75082 469.431.0571
TIMOTHY MALOOLY	**JEFF DUNLAP, PE**	**KYLE VEATER**

ARCHITECT/ENGINEER OF RECORD

ANDERSON

13605 1st Ave. N. #100 Plymouth, MN 55441
P 763.412.4000 | F 763.412.4090 | ae-mn.com
Anderson Engineering of Minnesota, LLC | Proj # 18125

STAMP: STATE OF OHIO — ADAM THIELE — E-92244 — REGISTERED PROFESSIONAL ENGINEER

Office of Design and Construction Services

VA U.S. Department of Veterans Affairs

Drawing Title	SITE DETAILS - 3
Phase	BID DOCUMENTS
Approved: Project Director	
Project Title	DAYTON NATIONAL CEMETERY GRAVESITE EXPANSION
Location	4400 W THIRD ST, DAYTON, OH 45428
Issue Date	FEBRUARY 5, 2026
Checked	JAF
Drawn	BJN
Project Number	810-CM3-033
Building Number	--
Drawing Number	CS503
	43 of 160

File Path: y:\18\100\18125 va nca midwest - dayton national cemetery - dayton ohio_07 civil_01 cad files_01 sheets\18125_c_site.dwg | ncbl.stanson | saved:2/2/2026 11:39 AM

VA FORM 08 - 6231

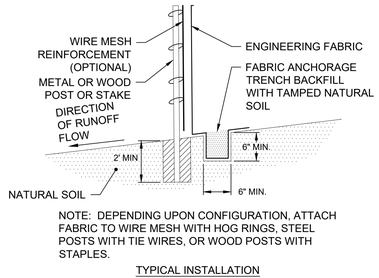

NOTE: DEPENDING UPON CONFIGURATION, ATTACH FABRIC TO WIRE MESH WITH HOG RINGS, STEEL POSTS WITH TIE WIRES, OR WOOD POSTS WITH STAPLES.

TYPICAL INSTALLATION

1 SILT FENCE
SCALE: N.T.S.

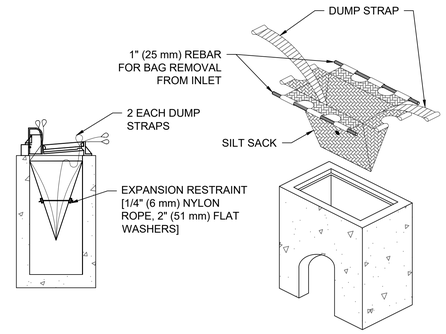

2 INLET PROTECTION SEDIMENT FILTER SACK
SCALE: N.T.S.

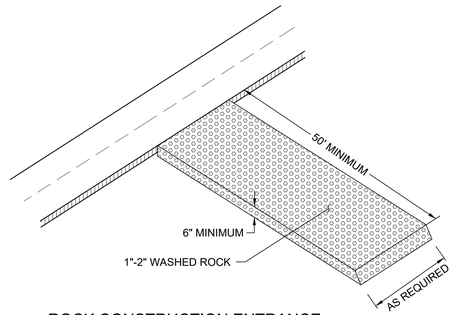

3 ROCK CONSTRUCTION ENTRANCE
SCALE: N.T.S.

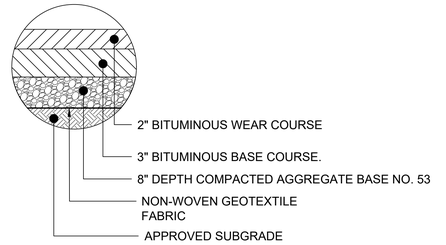

4 BITUMINOUS PAVEMENT SECTION
SCALE: N.T.S.

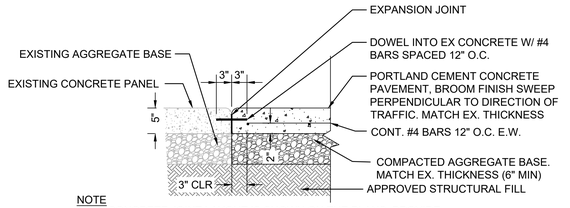

NOTE
1) CONCRETE JOINT LAYOUT IS SHOWN ON THE PLANS. PROVIDE EXPANSION JOINTS NEXT TO ALL FIXED OBJECTS.

5 LIGHT DUTY CONCRETE PAVEMENT
SCALE: N.T.S.

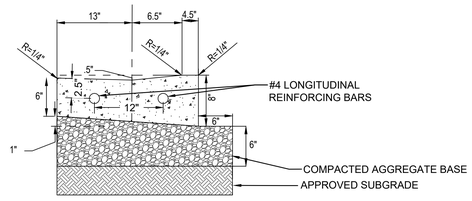

6 FLUSH CURB
SCALE: N.T.S.

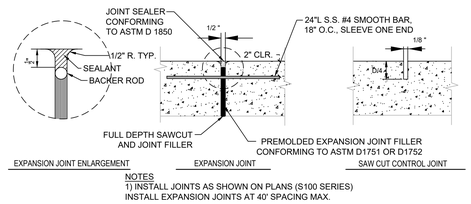

NOTES
1) INSTALL JOINTS AS SHOWN ON PLANS (S100 SERIES) INSTALL EXPANSION JOINTS AT 40' SPACING MAX.

2) D = DEPTH OF CONCRETE PAVEMENT

3) TRANSITION PAVEMENT THICKNESS OVER A MINIMUM DISTANCE OF 5'

7 CONCRETE JOINTING TYPES
SCALE: N.T.S.

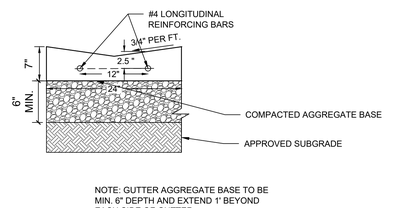

NOTE: GUTTER AGGREGATE BASE TO BE MIN. 6" DEPTH AND EXTEND 1' BEYOND EACH SIDE OF GUTTER.

8 CONCRETE VALLEY GUTTER DETAIL
SCALE: N.T.S.

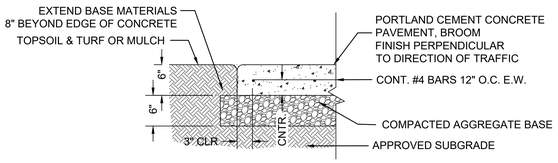

NOTE
1) CONCRETE JOINT LAYOUT IS SHOWN ON THE PLANS. CONTRACTOR SHALL SUBMIT JOINTING PLAN FOR APPROVAL PRIOR TO FINAL PAVING. PROVIDE EXPANSION JOINTS NEXT TO ALL FIXED OBJECTS.

9 HEAVY DUTY CONCRETE PAVEMENT
SCALE: N.T.S.

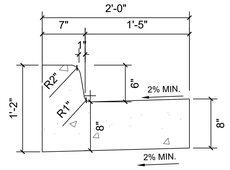

10 BARRIER CURB DETAIL
SCALE: N.T.S.

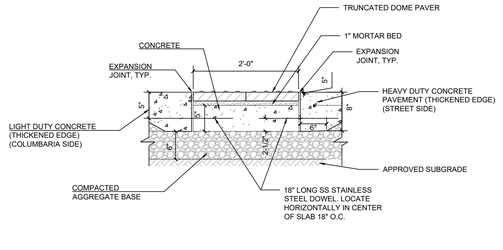

11 TRUNCATED DOMES
SCALE: N.T.S.

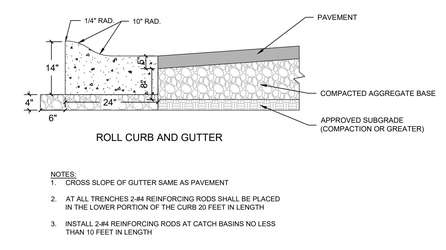

ROLL CURB AND GUTTER

NOTES:
1. CROSS SLOPE OF GUTTER SAME AS PAVEMENT
2. AT ALL TRENCHES 2-#4 REINFORCING RODS SHALL BE PLACED IN THE LOWER PORTION OF THE CURB 20 FEET IN LENGTH
3. INSTALL 2-#4 REINFORCING RODS AT CATCH BASINS NO LESS THAN 10 FEET IN LENGTH

12 ROLL CURB AND GUTTER
SCALE: N.T.S.

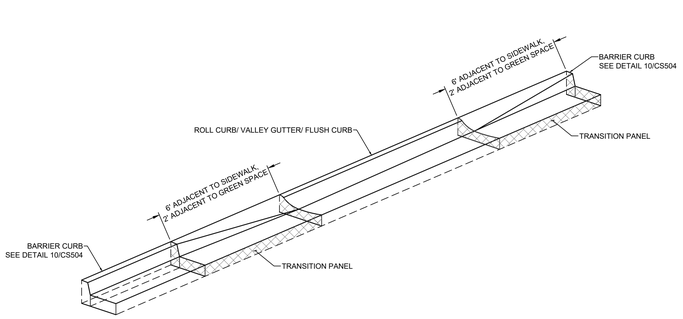

13 CURB TRANSITION ROLL CURB TO BARRIER CURB
SCALE: N.T.S.

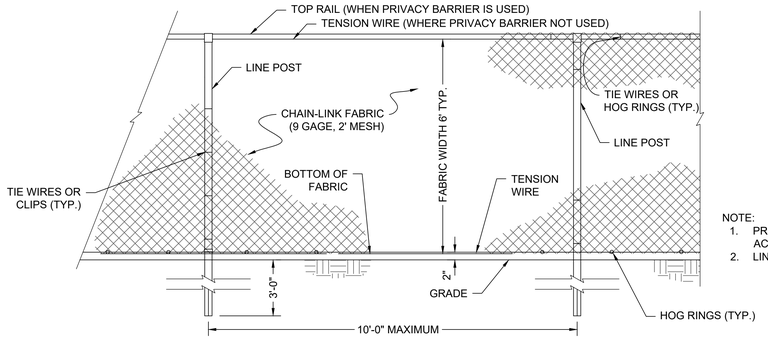

NOTE:
1. PROVIDE LOCKABLE SWING GATE AT ACCESS POINTS. FIELD LOCATE.
2. LINE POSTS TO BE EQUALLY SPACED.

14 TEMPORARY CONSTRUCTION FENCE (CHAIN-LINK)
SCALE: N.T.S.

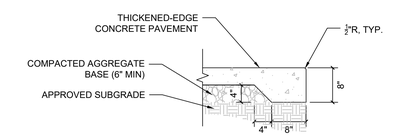

15 THICKENED-EDGE CONCRETE PAVEMENT
SCALE: N.T.S.

BID DOCUMENTS

Revisions:	Date:

CONSULTANTS

IRRIGATION	GEOTECHNICAL	COST ESTIMATING
WATER IN MOTION, INC.	**TERRACON**	**OCMI**
175 James Avenue North Minneapolis, MN 55405 952.229.1911	611 Lunken Park Drive Cincinnati, Ohio 45226 513.612.9020	2100 North Greenville Ave. Richardson, Texas 75082 469.431.0571
TIMOTHY MALOOLY	**JEFF DUNLAP, PE**	**KYLE VEATER**

ARCHITECT/ENGINEER OF RECORD

ANDERSON

13605 1st Ave. N. #100 Plymouth, MN 55441
P 763.412.4000 | F 763.412.4090 | ae-mn.com
Anderson Engineering of Minnesota, LLC | Proj # 18125

STAMP

STATE OF OHIO — ADAM THIELE — E-92244 — REGISTERED PROFESSIONAL ENGINEER

Office of Design and Construction Services

U.S. Department of Veterans Affairs

Drawing Title: SITE DETAILS - 4	Phase: BID DOCUMENTS
Approved: Project Director	

Project Title: DAYTON NATIONAL CEMETERY GRAVESITE EXPANSION		Project Number: 810-CM3-033
		Building Number: --
Location: 4400 W THIRD ST, DAYTON, OH 45428		Drawing Number: CS504
Issue Date: FEBRUARY 5, 2026	Checked: LRK / Drawn: EFR	39 OF 159

File Path: y:\18100\18125 va rock mls\west - dayton national cemetery - dayton ohio_07 civil_01 cad files_01 sheets\18125_c_site details.dwg | saved:2/12/2026 12:29 PM | ed:EjAmerikaamp

VA FORM 08 - 6231

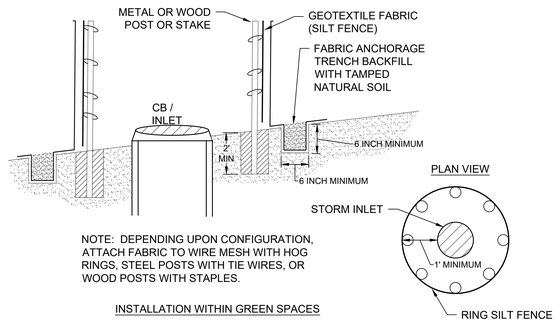

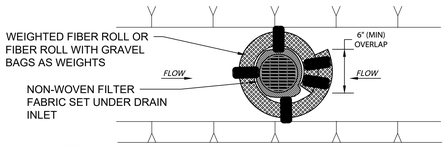

NOTES:
1. FIBER ROLL DRAIN INLET PROTECTION SHALL USE A MIN. 12" DIAMETER ROLL AND BE INSTALLED BEFORE CONSTRUCTION BEGINS.
2. GRAVEL BAGS SHALL BE FILLED WITH GRAVEL. SAND BAGS ARE NOT AN ACCEPTABLE SUBSTITUTE.
3. INSPECT AND REPAIR FIBER ROLLS EACH DAY AND AFTER EACH STORM EVENT. REMOVE SEDIMENT WHEN ONE THIRD OF THE FILTER DEPTH HAS BEEN FILLED. REMOVED SEDIMENT SHALL BE DISPOSED OF PROPERLY.
4. SEDIMENT AND GRAVEL DEPOSITED ON ROADWAYS SHALL BE IMMEDIATELY REMOVED.
5. IN HIGH TRAFFIC AREAS, MARK DRAIN INLET PROTECTION WITH VISIBLE BARRIERS SUCH AS SAFETY CONES.
6. REMOVE DRAIN INLET PROTECTION AFTER THE SURROUNDING AREA HAS BEEN STABILIZED.

INSTALLATION WITHIN PAVED AREAS

1 STORM DRAIN INLET PROTECTION
SCALE: N.T.S.

TO BE USED DURING MASS GRADING OR AS STAGE APPROPRIATE

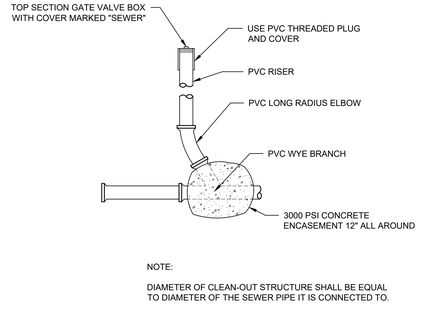

NOTE:

DIAMETER OF CLEAN-OUT STRUCTURE SHALL BE EQUAL TO DIAMETER OF THE SEWER PIPE IT IS CONNECTED TO.

2 STORM SEWER CLEANOUT
SCALE: N.T.S.

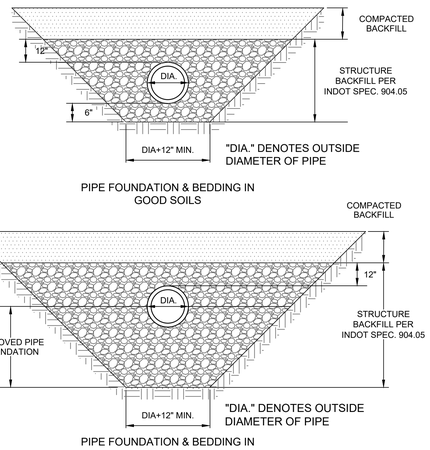

3 PVC PIPE BEDDING
SCALE: N.T.S.

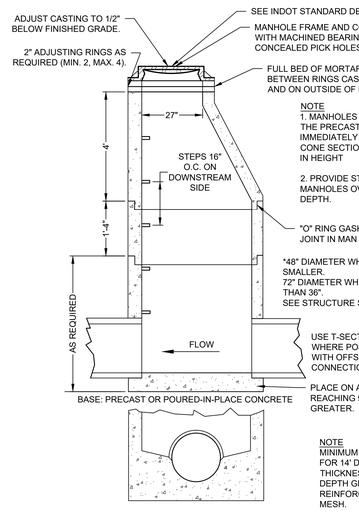

NOTE
1. MANHOLES 8' DEEP OR GREATER, THE PRECAST SECTION IMMEDIATELY FOLLOWING THE CONE SECTION SHALL BE 1'-4" (16") IN HEIGHT

2. PROVIDE STEPS IN ALL MANHOLES OVER 4.5 FEET IN DEPTH.

NOTE
MINIMUM SLAB THICKNESS 6" FOR 14' DEPTH. INCREASE THICKNESS 1" FOR EACH 4' OF DEPTH GREATER THAN 14' AND REINFORCE WITH 6"X6" 10/10 MESH.

4 STORM SEWER MANHOLE
SCALE: N.T.S.

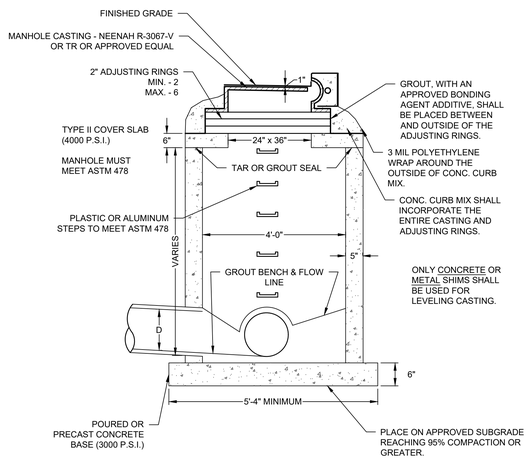

5 STORM SEWER CATCH BASIN
SCALE: N.T.S.

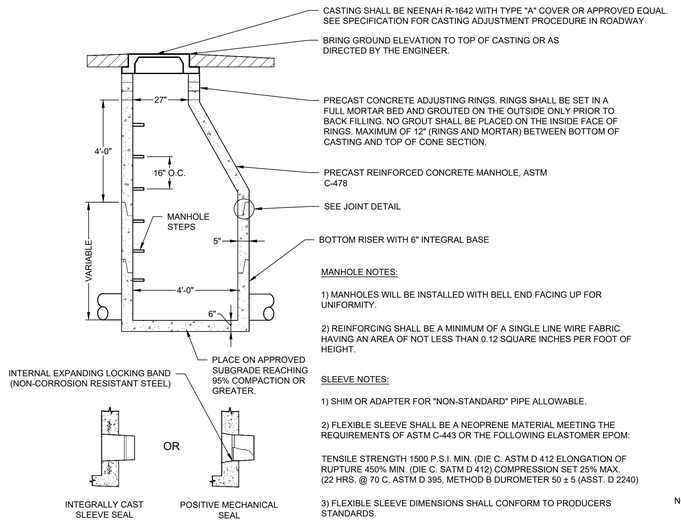

MANHOLE NOTES:

1) MANHOLES WILL BE INSTALLED WITH BELL END FACING UP FOR UNIFORMITY.

2) REINFORCING SHALL BE A MINIMUM OF A SINGLE LINE WIRE FABRIC HAVING AN AREA OF NOT LESS THAN 0.12 SQUARE INCHES PER FOOT OF HEIGHT.

SLEEVE NOTES:

1) SHIM OR ADAPTER FOR "NON-STANDARD" PIPE ALLOWABLE.

2) FLEXIBLE SLEEVE SHALL BE A NEOPRENE MATERIAL MEETING THE REQUIREMENTS OF ASTM C-443 OR THE FOLLOWING ELASTOMER EPOM:

TENSILE STRENGTH 1500 P.S.I. MIN. (DIE C. ASTM D 412 ELONGATION OF RUPTURE 450% MIN. (DIE C. SATM D 412) COMPRESSION SET 25% MAX. (22 HRS. @ 70 C. ASTM D 395, METHOD B DUROMETER 50 ± 5 (ASST. D 2240)

3) FLEXIBLE SLEEVE DIMENSIONS SHALL CONFORM TO PRODUCERS STANDARDS.

6 STANDARD SANITARY MANHOLE
SCALE: N.T.S.

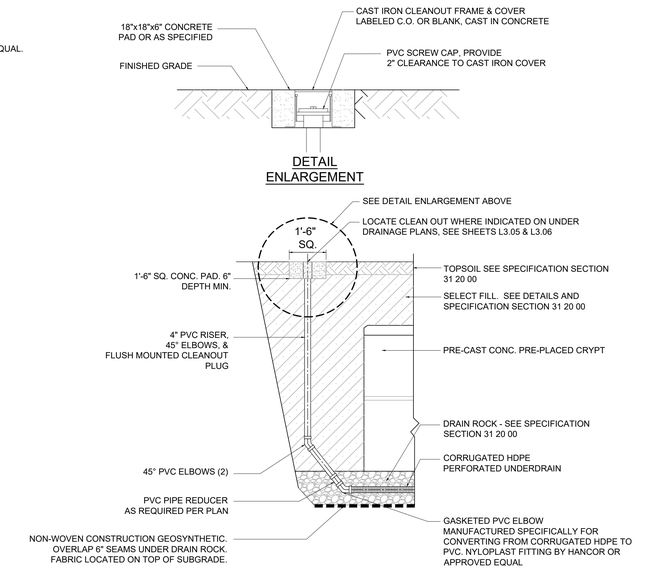

7 DRAINAGE CLEANOUT
SCALE: N.T.S.

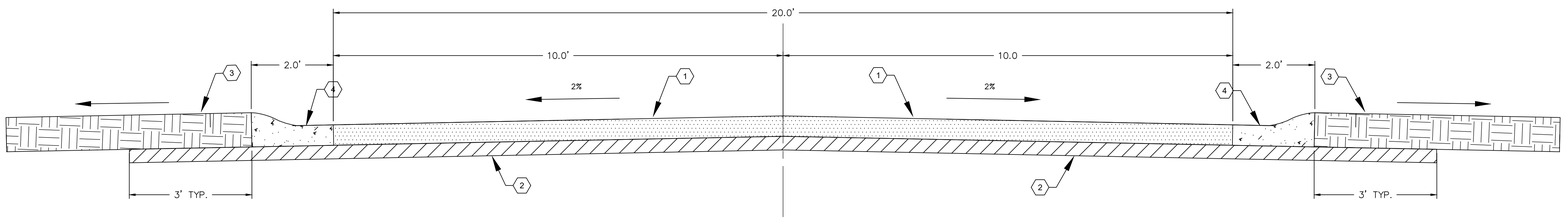

8 TYPICAL CROSS SECTION: NEW MEXICO AVE.
SCALE: N.T.S.

KEY NOTES

1. ASPHALT PAVEMENT SECTION SEE DETAIL 4/CS504
2. SUBGRADE PREPARATION
3. GREENSPACE
4. ROLL CONCRETE CURB AND GUTTER
5. HEAVY DUTY CONCRETE SIDEWALK SEE DETAIL 9/CS504
6. FLUSH CURB SEE DETAIL 6/CS504

BID DOCUMENTS

Revisions:	Date:

CONSULTANTS

IRRIGATION	GEOTECHNICAL	COST ESTIMATING
WATER IN MOTION, INC.	**TERRACON**	**OCMI**
175 James Avenue North Minneapolis, MN 55405 952.229.1911	611 Lunken Park Drive Cincinnati, Ohio 45226 513.612.9020	2100 North Greenville Ave. Richardson, Texas 76082 469.431.0571
TIMOTHY MALOOLY	**JEFF DUNLAP, PE**	**KYLE VEATER**

ARCHITECT/ENGINEER OF RECORD

ANDERSON

13605 1st Ave. N. #100 Plymouth, MN 55441
P 763.412.4000 | F 763.412.4090 | ae-mn.com
Anderson Engineering of Minnesota, LLC | Proj # 18125

STAMP

STATE OF OHIO — ADAM THIELE — E-92244 — REGISTERED PROFESSIONAL ENGINEER

Office of Design and Construction Services

U.S. Department of Veterans Affairs

Drawing Title	Phase	Project Title	Project Number
SITE DETAILS - 5	BID DOCUMENTS	DAYTON NATIONAL CEMETERY GRAVESITE EXPANSION	810-CM3-033
Approved: Project Director		Location: 4400 W THIRD ST, DAYTON, OH 45428	Building Number: --
		Issue Date: FEBRUARY 5, 2026 / Checked: LRK / Drawn: EFR	Drawing Number: CS505 — 45 of 160

File Path: y:\18100\18125 va mca midwest - dayton national cemetery - dayton ohio_07 civil_01 cad files_01 sheets\18125_c_site details.dwg | edit:alarson | saved:2/2/2026 11:38 AM

VA FORM 08 - 6231

NOTES:
1. ALL LETTERING TO BE PAINTED BLACK WITH EXCEPTION OF PROJECT TITLE WHICH IS TO BE BLUE.
2. ANY SEAM IN METAL TO BE FLAT SEAM - SEAMS TO BE HORIZONTAL AND OCCUR BETWEEN LINES OF LETTERING.
3. TEMPORARY CONSTRUCTION SIGNS TO BE FIELD LOCATED. VERIFY WITH R.E.

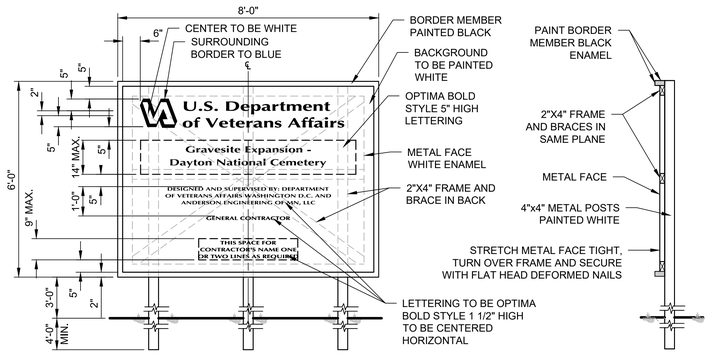

ELEVATION
NOT TO SCALE

SECTION ON ℄
NOT TO SCALE

1 PROJECT CONSTRUCTION SIGN
SCALE: N.T.S.

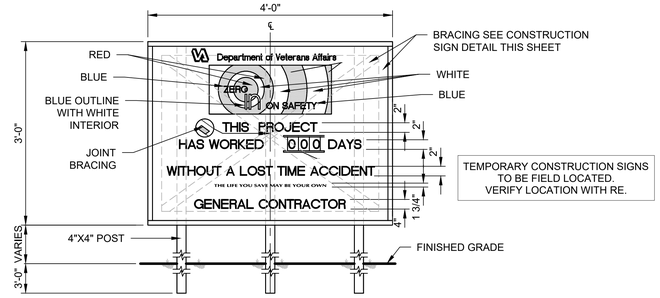

ELEVATION
NOT TO SCALE

2 PROJECT SAFETY SIGN
SCALE: N.T.S.

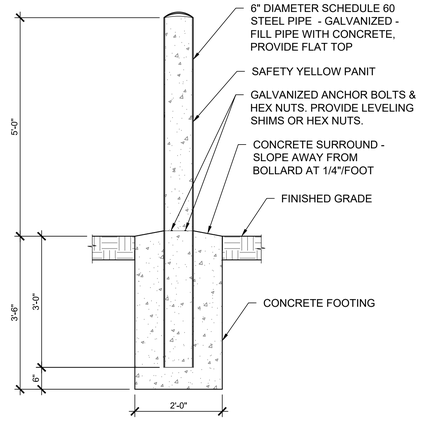

3 PIPE BOLLARD
SCALE: N.T.S.

CASTING	A	B
R1642B	27"	7"

INSIDE OF MANHOLE
INSIDE OF MANHOLE CONE SHALL BE LINED WITH GSE STUDLINER OR SPRAY ON LINER AS PER SECTION 12.09 "SEWER MANHOLE DROP SECTION". MANHOLE BENCHS AND INVERTS SHALL BE PLASTIC OR SPRAY ON LINER AS PER SECTION 12.09 "SEWER MANHOLE DROP SECTION".

DROP SECTION TYPE "A"
UNIT PRICE INCLUDES ELBOW, TEE, CONCRETE BASE AND SUPPORT INCLUDING CONCRETE.

DROP MH RISER
UNIT PRICE INCLUDES RISER PIPE AND SUPPORT. PAYMENT FROM INVERT TO INVERT.

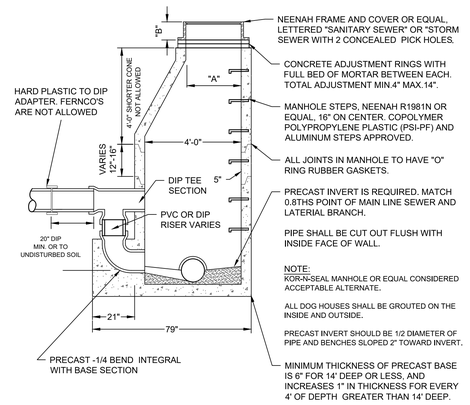

4 EXTERIOR DROP SANITARY MANHOLE
SCALE: N.T.S.

BID DOCUMENTS

Revisions:	Date:

CONSULTANTS

IRRIGATION	GEOTECHNICAL	COST ESTIMATING
WATER IN MOTION, INC.	**TERRACON**	**OCMI**
175 James Avenue North Minneapolis, MN 55405 952.229.1911	511 Lunken Park Drive Cincinnati, Ohio 45226 513.612.9020	2100 North Greenville Ave. Richardson, Texas 75082 469.431.0571
TIMOTHY MALOOLY	**JEFF DUNLAP, PE**	**KYLE VEATER**

ARCHITECT/ENGINEER OF RECORD

ANDERSON

13605 1st Ave. N. #100 Plymouth, MN 55441
P 763.412.4000 | F 763.412.4090 | ae-mn.com
Anderson Engineering of Minnesota, LLC | Proj # 18125

STAMP

STATE OF OHIO
ADAM THIELE
E-92244
REGISTERED
PROFESSIONAL ENGINEER

Office of Design and Construction Services

U.S. Department of Veterans Affairs

Drawing Title: SITE DETAILS - 6	Phase: BID DOCUMENTS
Approved: Project Director	

Project Title: DAYTON NATIONAL CEMETERY GRAVESITE EXPANSION		Project Number: 810-CM3-033
		Building Number: --
Location: 4400 W THIRD ST, DAYTON, OH 45428		Drawing Number: CS506
Issue Date: FEBRUARY 5, 2026	Checked: LRK / Drawn: EFR	40 OF 159

File Path: J:\18100\18125-va rcsa midwest - dayton national cemetery - dayton ohio_07 civil_01 cad files_01 sheets\18125_c_site details.dwg | saved 2/6/2026 10:31 AM

VA FORM 08 - 6231