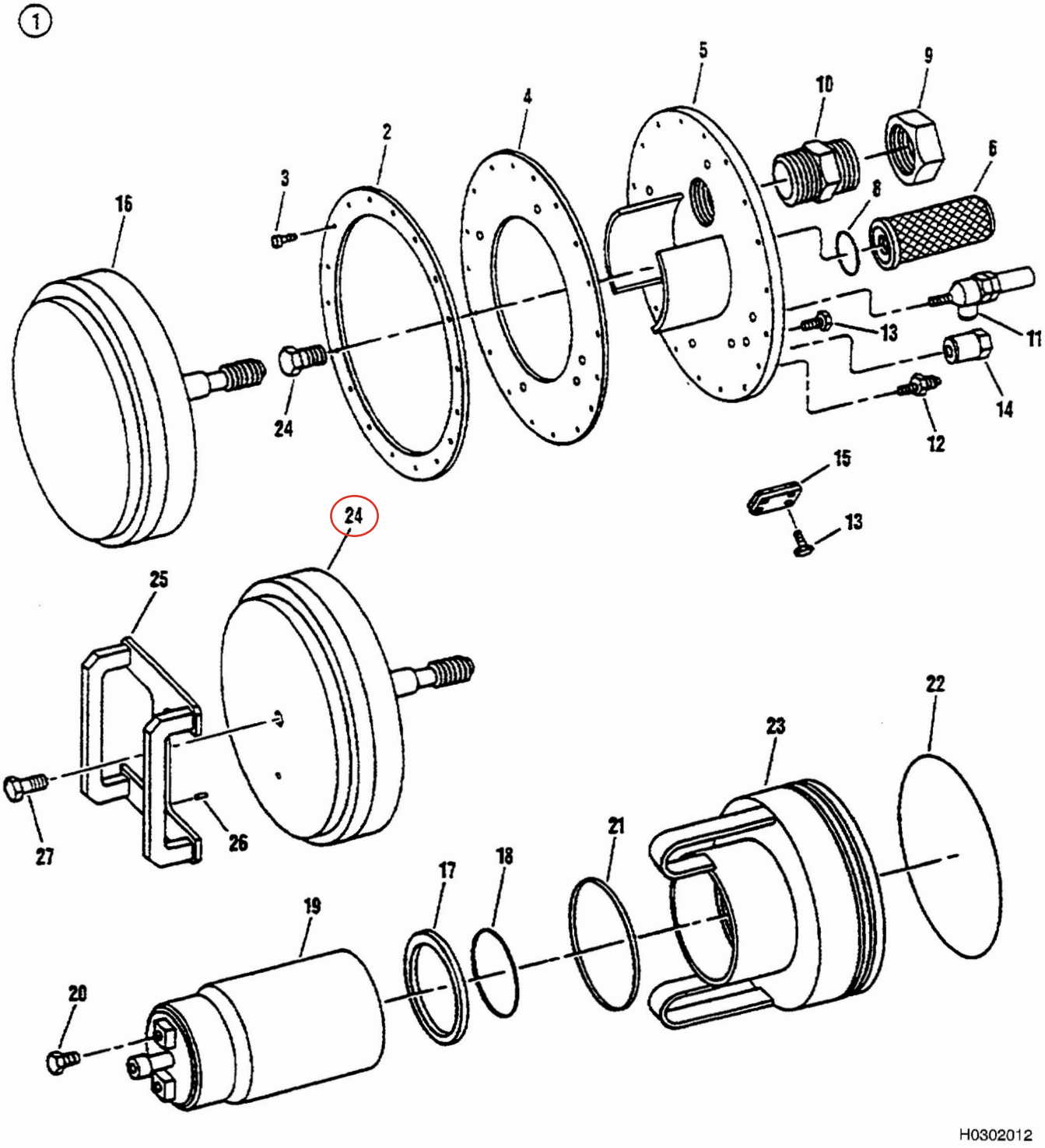

Figure 3-148. Leak Check Fixture Set Exploded View

FIGURE & INDEX/ SHEET NO.	PART NUMBER	CAGE	DESCRIPTION 1 2 3 4 5 6 7	UNITS PER ASSY	USABLE ON CODE	SMR CODE
3-148- 1	3C3408	07482	FIXTURE SET, Leak check - No. 5 sump	1		PEFFF
2	3C3408P05		. RING	1		
3	MS16995-36		. SCREW (0.190-24 UNC-3A X 0.50) (AP)	18		
4	3C3408P04		. GASKET	1		
5	3C3408P47		. PLATE	1	A	
	3C3408P51		. PLATE	1	B	
6	3C3408P08		. NUT	1		
7	MS35307-483		. BOLT (0.750-10 UNC-3A X 1.25) (AP)	1		
8	M83248/1-218		. O-RING	1		
9	MS51532-B24S		. CAP	1		
10	MS51500-B24S		. CONNECTOR	1		
11	1432M93P01	07482	. VALVE, Relief (646B-1-0.25-2, 86768)	2	A	
	1432M94P01	07482	. VALVE, Relief (646B-2-0.25-2, 86768)	2	B	
12	MS51500-B4-4S		. CONNECTOR	1		
13	MS35308-306		. BOLT (0.250-28 UNF-3A X 0.75) (AP)	9	A	
	MS35308-306		. BOLT (0.250-28 UNF-3A X 0.75) (AP)	4	B	
14	3C3408P49		. NUT	5	B	
15	3C3408P20		. COVER	1		
16	3C3408P46		. POST	1	A	
17	3C3408P38		. GASKET	1		
18	M93248/1-241		. O-RING	1		
19	3C3408P41		. CAP	1		
20	5P5ON-SS	30780	. PLUG	2		
21	M83248/1-243		. O-RING	2		
22	M83248/1-263		. O-RING	2		
23	3C3408P44		. CLOSURE	1		
24	3C3408P48		. POST	1	B	
25	3C3408P53		. HANDLE ASSEMBLY	1	B	
26	MS16555-625		. . PIN, Dowel (0.125 X 0.375)	1	B	
27	MS35307-409		. BOLT (0.500-13 UNC-2A X 1.00) (AP)	1	B	
			CODES USABLE ON A 3C3408G03 B 3C3408G05			