SPECIFICATIONS
(For Construction Contract)

Solicitation Number W9128F26BA019

IDCC Road Maintenance 2026 Oahe Dam, SD

April 2026

US Army Corps of Engineers
Omaha District

This page was intentionally left blank for duplex printing.

PROJECT TABLE OF CONTENTS

DIVISION 01 - GENERAL REQUIREMENTS

01 11 00 SUMMARY OF WORK
01 12 00 CONSTRUCTION GENERAL
01 30 00.24 OTHER ADMINISTRATIVE AND SPECIAL REQUIREMENTS
01 32 01.00 10 PROJECT SCHEDULE
01 33 00 SUBMITTAL PROCEDURES
01 35 26 GOVERNMENTAL SAFETY REQUIREMENTS
01 41 26.01 24 (SOUTH DAKOTA) NPDES PERMIT REQUIREMENTS FOR STORM WATER DISCHARGES FROM CONSTRUCTION SITES
01 42 00 SOURCES FOR REFERENCE PUBLICATIONS
01 45 00 QUALITY CONTROL
01 45 00.15 10 RESIDENT MANAGEMENT SYSTEM CONTRACTOR MODE (RMS CM)
01 57 20.00 10 ENVIRONMENTAL PROTECTION
01 57 23 TEMPORARY STORM WATER POLLUTION CONTROL

DIVISION 31 - EARTHWORK

31 00 00 EARTHWORK
31 05 19 GEOTEXTILE

DIVISION 32 - EXTERIOR IMPROVEMENTS

32 01 16.17 COLD MILLING OF BITUMINOUS PAVEMENTS
32 01 17.16 SEALING OF CRACKS IN BITUMINOUS PAVEMENTS
32 11 23 AGGREGATE AND/OR GRADED-CRUSHED AGGREGATE BASE COURSE
32 12 16 HOT-MIX ASPHALT (HMA) FOR ROADS
32 12 36.13 ASPHALTIC SEAL AND FOG COATS
32 16 13 CONCRETE SIDEWALKS AND CURBS AND GUTTERS
32 17 24.00 10 PAVEMENT MARKINGS
32 92 19 SEEDING
32 97 00.00 24 CRUSHING ASPHALT MIX MATERIAL

DIVISION 33 - UTILITIES

33 40 00 STORM DRAINAGE UTILITIES

-- End of Project Table of Contents --

This page was intentionally left blank for duplex printing.

SECTION TABLE OF CONTENTS

DIVISION 01 - GENERAL REQUIREMENTS

SECTION 01 11 00

SUMMARY OF WORK

PART 1 GENERAL

1.1 WORK COVERED BY CONTRACT DOCUMENTS
1.1.1 Project Description
1.1.2 Location
1.1.2.1 SPECIFICATIONS
1.2 OCCUPANCY OF PREMISES
1.3 EXISTING WORK
1.4 LOCATION OF UNDERGROUND UTILITIES
1.5 WORK SCHEDULING

PART 2 PRODUCTS

PART 3 EXECUTION

-- End of Section Table of Contents --

SECTION 01 11 00

SUMMARY OF WORK

PART 1 GENERAL

The following paragraphs describe the required work. The description of the work in this section is abbreviated with the details provided in the technical sections. The technical specifications are arranged by the Construction Specifications Institute (CSI) numbering system, which does not correspond with sequence in which the work has to be accomplished.

1.1 WORK COVERED BY CONTRACT DOCUMENTS

1.1.1 Project Description

This section covers the technical specification to provide all labor, materials, incidentals, and equipment to perform the work required to maintain and improve roads in the areas around the Oahe Project in the vicinity of the Oahe Dam near Pierre, SD. This list is a general summary of the required work and is not all inclusive:

1.1.2 Location

The Oahe Project is located approximately 7 miles north of Pierre, SD. The area included in this IDCC includes the general area of the Oahe Dam and is outlined in the location map.
The exact locations will be as shown on drawings or by the Contracting Officer's Representative.

1.1.2.1 SPECIFICATIONS

TECHNICAL SPECIFICATIONS LISTED BELOW COVER THE POTENTIAL REQUIRED TYPES OF WORK:

00 10 00	Bid Schedule
01 11 00	Summary of Work
01 30 00	Administrative Requirements
01 33 00	Submittal Procedures
01 35 26	Governmental Safety Requirements
01 45 00.00 10	Quality Control
01 57 20.00 10	Environmental Protection
31 00 00	Earthwork
31 05 19	Geotextile Fabric
32 01 16.17	Cold Milling of Bituminous Pavements
32 01 17.16	Sealing of Cracks in Bituminous Pavements
32 11 23	Graded-Crushed Aggregate
32 12 11	Bituminous Surface Treatment
32 12 16	Hot Mix Asphalt
32 16 13	Concrete Sidewalks and Curbs and Gutters
32 17 24.00 10	Pavement Markings
32 92 19	Seeding
32 97 00.00 24	Crushing Asphalt Mix Material
33 40 00	Storm Drainage Utilities

1.2 OCCUPANCY OF PREMISES

Building(s) will be occupied during performance of work under this Contract.

Before work is started, the Contractor shall arrange with the Contracting Officer a sequence of procedure, means of access, space for storage of materials and equipment, and use of approaches, corridors, and stairways.

1.3 EXISTING WORK

In addition to "FAR 52.236-9, Protection of Existing Vegetation, Structures, Equipment, Utilities, and Improvements":

a. Remove or alter existing work in such a manner as to prevent injury or damage to any portions of the existing work which remain.

b. Repair or replace portions of existing work which have been altered during construction operations to match existing or adjoining work, as approved by the Contracting Officer. At the completion of operations, existing work shall be in a condition equal to or better than that which existed before new work started.

1.4 LOCATION OF UNDERGROUND UTILITIES

Scan the construction site with electromagnetic or sonic equipment, and mark the surface of the ground, pier deck or paved surface where existing underground utilities are discovered. Verify the elevations of existing piping, utilities,and any type of underground or encased obstruction not indicated to be specified or removed but indicated or discovered during scanning in locations to be traversed by piping, ducts, and other work to be conducted or installed.

Notify the Contracting Officer at least 48 hours prior to starting excavation work.

1.5 WORK SCHEDULING

Contract work will be limited to the hours of 7 AM to 5 PM - Monday thru Friday. No work will be permitted on Saturday, Sunday, or Federal Holidays. Any work to be performed outside the designated work scheduling will have to be approved by the COR 7 days prior to work being performed.

PART 2 PRODUCTS

Not used.

PART 3 EXECUTION

Not used.

-- End of Section --

This page was intentionally left blank for duplex printing.

SECTION TABLE OF CONTENTS

DIVISION 01 - GENERAL REQUIREMENTS

SECTION 01 12 00

CONSTRUCTION GENERAL

PART 1 GENERAL

1.1 SCOPE
1.2 CONSTRUCTION RIGHT-OF-WAY
1.3 PROTECTION OF EXISTING FACILITIES AND WORKS
1.3.1 Protection of Appurtenances from Bituminous Material Applications
1.3.2 Interruption of Electric Power
1.4 CARE OF WATER
1.5 DISPOSITION OF CONSTRUCTION FACILITIES
1.6 ACCESS ROADS AND HAUL ROADS
1.6.1 Access Roads
1.6.2 Haul Roads
1.6.3 Joint Use of Transportation Facilities
1.7 PUBLIC ROADS
1.7.1 Lane Closure
1.7.2 Traffic Control Devices
1.7.3 Temporary Traffic Control (TTC)
1.7.4 Operations
1.7.4.1 Flaggers
1.7.5 Road Closure
1.7.6 State and Federal Highways
1.7.7 State and Local Public Roads
1.7.8 City Streets
1.7.9 Utility Lines
1.8 COOPERATION WITH OTHER CONTRACTORS
1.9 ORDER OF WORK
1.10 COORDINATION AND OUTAGES
1.11 SUBMITTALS
1.12 PROJECT SIGN
1.13 WARRANTY OF CONSTRUCTION (MAR 1994)
1.14 TELEPHONE/INTERNET
1.15 PORTABLE TOILETS
1.16 AS-BUILT DRAWINGS
1.17 FEDERAL HOLIDAYS AND WORKING HOURS

PART 2 NOT USED

PART 3 NOT USED

-- End of Section Table of Contents --

SECTION 01 12 00

CONSTRUCTION GENERAL

PART 1 GENERAL

Attachments: Standard Sign Detail

1.1 SCOPE

The work covered in this section is outlined as a statement of construction requirements common to all the work. Specific requirements for materials and installations are provided under the Technical Sections herewith. No claims for extras shall be made on account of items presumed to have been omitted from this section.

1.2 CONSTRUCTION RIGHT-OF-WAY

The Contractor will be assigned working areas or working right-of-way limits for use in the prosecution of work under this contract, subject to FAR clause 52.236-10 entitled "Operations and Storage Areas."

1.3 PROTECTION OF EXISTING FACILITIES AND WORKS

The Contractor shall be responsible for the protection of the work area from damage and upon completion of the work shall leave existing works in a condition equal to that which existed when the work started. All work, storage of materials, and construction plant shall be kept within the limits of the areas assigned. Prior to construction operations, the Contractor shall confer with the Contracting Officer's representative to determine the proximity of any possible under-ground obstructions, pipe or equipment which could be damaged as a result of construction operations. Existing utility lines that are shown on the drawings or the locations are otherwise made known to the Contractor shall be protected from damage, and if damaged, shall be repaired by the Contractor at no additional expense to the Government. In the event that the Contractor damages any existing utility lines that are not shown or the locations of which have not been made known to the Contractor, the Contractor shall immediately notify the Contracting Officer. The Contracting Officer will review the information and discuss with the Contractor how to proceed. The Contractor will be responsible for the protection of structures from any structural damage during the construction operations. Roads and surfaces shall be protected from damage by the work or if damaged shall be repaired with equal materials at no additional expense to the Government. At all times the plant and work areas shall be kept in a condition conducive to safety of workmen and the public and neat in appearance. Waste or surplus materials shall not be allowed to accumulate in the construction areas.

1.3.1 Protection of Appurtenances from Bituminous Material Applications

It shall be the responsibility of the Contractor to cover and protect the surfaces of roadway appurtenances, structures and installations by approved methods in advance of any bituminous material application adjacent thereto. Damages or defacement thereof shall be corrected as directed, by and at the expense of the Contractor.

1.3.2 Interruption of Electric Power

If it is necessary to cut off power in transmission lines that pass through construction areas, it shall be the Contractor's responsibility to make the necessary arrangements with the owner of the powerline, and the Contractor shall pay all costs therefore.

1.4 CARE OF WATER

Full responsibility for care of water shall be borne by the Contractor until completion of work under this contract. The Contractor shall provide the materials and equipment and perform all work necessary to facilitate construction and to protect the work from damage by water. The Contractor shall make the needed investigations and determinations of conditions, both existing and anticipated concerning care of water. Plans for care of water are subject to approval by the Contracting Officer prior to construction. Facilities shall be removed upon completion of the work.

1.5 DISPOSITION OF CONSTRUCTION FACILITIES

All buildings and facilities constructed by the Contractor shall be maintained in a satisfactory condition with strict observance of the rules of sanitation, safety and order as may be established by the Contracting Officer. Prior to final payment under the contract, all buildings and facilities constructed by the Contractor for the Contractor's use shall be removed from the site by the Contractor.

1.6 ACCESS ROADS AND HAUL ROADS

1.6.1 Access Roads

Access roads as required for the prosecution of the work shall be maintained (including sprinkling for dust control, safety personnel, and traffic control) within the work areas assigned to the Contractor. Consideration shall be given to the avoidance of interference with others, safety and frequency of traffic, subject to review and approval prior to construction. Access road areas shall be restored to their original or suitable condition upon completion of this contract. The Contractor shall be responsible for repair of damage to existing roads caused by the Contractor's operation.

1.6.2 Haul Roads

The Contractor shall construct haul roads as may be necessary for the conduct of the work without additional cost to the Government. The Contractor shall arrange the hauling operations so as to cause a minimum interference with traffic and shall develop Temporary Traffic Control (TTC) plan(s) and furnish all necessary traffic control devices and personnel as required to avoid additional hazards to the public. The Contractor shall perform routine day and night inspections of TTC elements as required by MUTCD and maintain all furnished traffic control devices at their expense and without additional cost to the Government. Lines, grades and widths for haul roads, shall be selected to fulfill the requirements for safe and efficient hauling operations and shall be approved by the Contracting Officer prior to construction. Haul roads shall have ample width to provide safety. Preference shall be given to one-way haul roads when these are feasible. All roads shall be maintained in original as-built condition during all periods of their use. Roads shall be

sprinkled whenever, in the opinion of the Contracting Officer, control of dust is necessary to insure safe movements of construction traffic. Upon completion of work under this contract, roads shall be disposed of as directed by the Contracting Officer. All traffic control devices, culverts, guards, fences and other improvements on roads constructed for the Contractor's convenience and operations shall be removed from the project site and shall remain property of the Contractor. Use and repair of existing roads and bridges shall be subject to the requirements of local authorities. Prior to start of hauling operations on public roads, the Contractor shall furnish written evidence to the Contracting Officer that an agreement has been consummated with State and County officials on the use of public roads and bridges. Such agreements shall clearly relieve the Government of any responsibility for damage resulting from hauling across or on these roads.

1.6.3 Joint Use of Transportation Facilities

The Contractor may use jointly with Contractors and others, existing access and haul roads constructed by the Government or by others. Unless otherwise specifically authorized in writing, the Contractor will not be granted exclusive use of any access or haul road whether it be an existing road or one constructed by the Contractor. However, the use by others of roads constructed by or assigned to the Contractor primarily for the Contractor's use will be limited by the Contracting Officer to the minimum considered consistent with efficient prosecution of the work under this and other contracts in force. Maintenance of jointly used facilities shall be shared in proportion to use. In the event of a disagreement between this Contractor and others as to the use of any road, the decision of the Contracting Officer shall be final. The Contractor shall not obstruct any existing road on the land controlled by the Government.

1.7 PUBLIC ROADS

1.7.1 Lane Closure

The Contractor shall determine an appropriate method for the specific Temporary Traffic Control (TTC) zone one-lane, two-ways traffic control method in accordance with MUTCD requirements. The Contractor shall furnish all necessary personnel and traffic control devices, perform routine day and night inspections of TTC elements, and maintain all furnished traffic control devices to provide safety for motorists, bicyclists, pedestrians, workers, enforcement/emergency officials, and equipment as required by MUTCD The Contractor is required to coordinate the road/lane closure with the SDDOT and USACE.

1.7.2 Traffic Control Devices

All traffic control devices (signs, arrow boards, barricades, lighting etc) by the Contractor, must conform with the U.S. Department of Transportation, Federal Highway Administration, Manual on Uniform Traffic Control Devices.

1.7.3 Temporary Traffic Control (TTC)

The Contractor shall be responsible for the safe control of traffic on all haul and access roads used primarily for the work under these specifications and at their crossings with roads used by others. The Contractor shall, at the Contractor's own expense, furnish all personnel, and traffic control devices necessary for the safe movement of all road

users through or around Temporary Traffic Control zone. Traffic control plans, including a listing of equipment and its employment, shall be submitted for review and approval prior to construction.

1.7.4 Operations

When operations are being conducted near a U. S. or State Highway or when construction equipment is being used on or adjacent to such highway, the Contractor shall furnish all necessary traffic control devices and personnel to provide safe and effective movement of all road users through or around Temporary Traffic Control zone as required by MUTCD All required state and/or local permits shall be obtained at the Contractor's expense in advance and shall be provided to the COR. The highways and streets shall be kept open at all times.

1.7.4.1 Flaggers

The Contractor shall provide flaggers when:

a) Construction equipment and/or vehicles are blocking the roadway making it difficult for vehicles to pass or see or due to terrain.

b) One-way traffic is required thru a construction zone.

c) Trucks are pulling onto and/or off of a roadway or operating at a reduced speed causing a hazardous situation for drivers.

d) Anytime the Contractor feels that road users are at risk due to Construction activity.

Flagger shall have all qualifications, high-visibility safety apparel, and appropriate hand-signaling devices in accordance with MUTCD requirements. The flagger shall be properly trained as required by the state. The Contractor shall furnish all necessary traffic control devices to establish appropriate TTC zone when the Flagger Control is utilized.

1.7.5 Road Closure

At each location designated by the Contracting Officer and where safe operation requires the closing of roads, streets or other travel arteries leading to the work under this contract, the Contractor shall furnish all appropriate traffic control devices to provide safety for motorists, bicyclists, pedestrians, workers, enforcement/emergency officials, and equipment during construction as required by MUTCD. Arrangements for closure of roads, streets or other travel arteries shall be made by the Contractor with local State, County or City officials. The Contractor shall notify the appropriate official in writing at least ten (10) days in advance of the date desired to close a road to traffic and shall furnish a copy of the agreement and approved Temporary Traffic Control plans to the Contracting Officer prior to closure.

1.7.6 State and Federal Highways

Where the Contractor hauls across or on State or Federal highways, the Contractor shall enter into all agreements with the State Highway Commission and shall comply with any restrictions they may impose relative to load limits, care of traffic and cleanup. Such agreements shall clearly relieve the Government of any responsibility for damages resulting from hauling across or on State highways. Copies of such agreements shall be furnished to the Contracting Officer before the Contractor begins hauling on these highways.

1.7.7 State and Local Public Roads

(a) Load Limits:

The South Dakota Department of Transportation and local County Road Commissions restrict the load weights of haul vehicles using highways and county roads during the spring thaw period. The load restrictions are usually imposed from 1 April through June depending on actual weather conditions.

(b) Hauling Regulations:

Prior to start of hauling operations on public roads, the Contractor shall furnish evidence to the Contracting Officer that an agreement has been consummated with State and County officials on the use of public roads and bridges. Such agreements shall clearly relieve the Government of any responsibility for damage resulting from hauling across or on these roads.

1.7.8 City Streets

Where the Contractor intends to cross or to use city streets for haul roads the Contractor shall enter into an agreement with the City and shall comply with any restrictions the City may impose relative to load limits, care of traffic and cleanup. Such agreements shall clearly relieve the Government of any responsibility for damage resulting from hauling across or on these highways. A copy of all such agreements shall be furnished the Contracting Officer before the Contractor begins hauling in city streets.

1.7.9 Utility Lines

It shall be the responsibility and obligation of the Contractor to make all arrangements with the affected companies for the necessary moving and alterations of utility lines and the continuation of service during construction as covered by the plans and specifications.

1.8 COOPERATION WITH OTHER CONTRACTORS

The Contractor shall cooperate and coordinate work with that of others working in the area during the life of this contract. The Contractor shall coordinate work with others to avoid undue interference and shall conduct operations, other than approved required access, within the limits of the assigned construction area or construction right-of-way limits. The Contractor shall cooperate with others as necessary in the interest of timely completion of all work and in the event of disagreement the decision of the Contracting Officer shall be final.

1.9 ORDER OF WORK

The sequence of operations shall be maintained so that the maximum amount of work may be done under favorable working conditions. The Contractor shall submit for approval, within 15 days after receipt of notice to proceed a narrative description of the proposed methods of operation.

1.10 COORDINATION AND OUTAGES

The Contractor's employees shall not open, close or tamper with switches, valves or control devices for existing installed equipment. Only Government operating personnel will be authorized to open or close

existing switches, valves and control devices to enable the Contractor to make connections or modifications to existing equipment. Work shall be coordinated and scheduled to reduce the "Down" time of operating equipment or systems to a minimum.

1.11 SUBMITTALS

Government approval is required for submittals with a "G" designation; submittals not having a "G" designation are for information only. When used, a designation following the "G" designation identifies the office that will review the submittal for the Government. The following shall be submitted in accordance with Section 01 33 00 SUBMITTAL PROCEDURES:

SD-01 Preconstruction Submittals

Proposed Methods of Operation; G-AO

Construction Right-of-Way

(Right-of-Way Agreements)

State and Federal Highways

(Agreements for hauling on highways)

State and Local Public Roads

(Agreements for hauling on roads)

Temporary Traffic Control (TTC); G, AO

SD-02 Shop Drawings

Care of Water; G-AO

SD-11 Closeout Submittals

Warranty of Construction

(List of warranties with copy of each)

Final As-Built Drawings; G, AO

1.12 PROJECT SIGN

The Contractor shall provide a new project sign constructed in accordance with Standard Sign Detail bound herein. The sign shall be erected at the project site by the Contractor at the location determined by the Contracting Officer. The project sign shall remain the property of the Contractor and upon completion of the contract, work shall be removed from the premises by the Contractor. No separate payment will be made for the sign.

1.13 WARRANTY OF CONSTRUCTION (MAR 1994)

(a) In addition to any other warranties in this contract, the Contractor warrants, except as provided in paragraph (i) of this clause, that work performed under this contract conforms to the contract requirements and is free of any defect in equipment, material, or design furnished, or

workmanship performed by the Contractor or any subcontractor or supplier at any tier.

(b) This warranty shall continue for a period of 1 year from the date of final acceptance of the work. If the Government takes possession of any part of the work before final acceptance, this warranty shall continue for a period of 1 year from the date the Government takes possession.

(c) The Contractor shall remedy at the Contractor's expense any failure to conform, or any defect. In addition, the Contractor shall remedy at the Contractor's expense any damage to Government-owned or controlled real or personal property, when that damage is the result of--

(1) The Contractor's failure to conform to contract requirements; or

(2) Any defect of equipment, material, workmanship, or design furnished.

(d) The Contractor shall restore any work damaged in fulfilling the terms and conditions of this clause. The Contractor's warranty with respect to work repaired or replaced will run for 1 year from the date of repair or replacement.

(e) The Contracting Officer shall notify the Contractor, in writing, within a reasonable time after the discovery of any failure, defect, or damage.

(f) If the Contractor fails to remedy any failure, defect, or damage within a reasonable time after receipt of notice, the Government shall have the right to replace, repair, or otherwise remedy the failure, defect, or damage at the Contractor's expense.

(g) With respect to all warranties, express or implied, from subcontractors, manufacturers, or suppliers for work performed and materials furnished under this contract, the Contractor shall--

(1) Obtain all warranties that would be given in normal commercial practice;

(2) Require all warranties to be executed, in writing, for the benefit of the Government, if directed by the Contracting Officer; and

(3) Enforce all warranties for the benefit of the Government, if directed by the Contracting Officer.

(h) In the event the Contractor's warranty under paragraph (b) of this clause has expired, the Government may bring suit at its expense to enforce a subcontractor's, manufacturer's, or supplier's warranty.

(i) Unless a defect is caused by the negligence of the Contractor or subcontractor or supplier at any tier, the Contractor shall not be liable for the repair of any defects of material or design furnished by the Government nor for the repair of any damage that results from any defect in Government-furnished material or design.

(j) This warranty shall not limit the Government's rights under the Inspection and Acceptance clause of this contract with respect to latent defects, gross mistakes, or fraud. (FAR 52.246-21)

1.14 TELEPHONE/INTERNET

The Contractor is responsible for arranging telephone/Internet service for the Contractor's trailer through the local telephone company.

1.15 PORTABLE TOILETS

Toilet facilities will not be available for Contractor's use. The Contractor shall provide and maintain portable toilets for use by the Contractor's staff and Government staff. Toilet(s) shall be placed at the location directed by the Contracting Officer. To prevent overturning by high winds, all portable toilets shall be anchored down.

1.16 AS-BUILT DRAWINGS

The Contractor shall provide a marked-up half size drawing to show actual work performed to include necessary sketches, modification drawings, shop drawings and notes. Red ink is to be used for additions and deviations from the contract. Green ink is to be used to indicate work deleted from the contract. The drawings shall be maintained by the Contractor as the work progresses and available for review by the government representatives. The as-built drawings shall be submitted for approval at the completion of the project. The completed set shall be available at time of final inspection.

In accordance with the clause "Payment Under Fixed - Price Construction Contracts", $5,000 will be withheld from payment for the creation of As-Built Drawings until Final As-Built Drawings are delivered to and accepted by the COR.

1.17 FEDERAL HOLIDAYS AND WORKING HOURS

The Contractor will have access to the facility for work during normal plant business hours from 0700 to 1700 hrs Monday through Friday, excluding any federally recognized holidays or observance days. The Contractor shall plan all work accordingly. These hours will be strictly adhered to unless the Government determines work outside this time is beneficial to the Government or a bilateral modification for extended working hours is executed.

The following Federal legal holidays are observed by this installation:

New Year's Day	1 January
Martin Luther King's Birthday	Third Monday in January
President's Day	Third Monday in February
Memorial Day	Last Monday in May
Juneteenth	19 June
Independence Day	4 July
Labor Day	First Monday in September
Columbus Day	Second Monday in October
Veterans Day	11 November
Thanksgiving Day	Fourth Thursday in November
Christmas Day	25 December

If the wage determination has a discrepancy with the above list of observed Federal holidays, then the wage determination takes precedence.

PART 2 NOT USED

PART 3 NOT USED

-- End of Section --

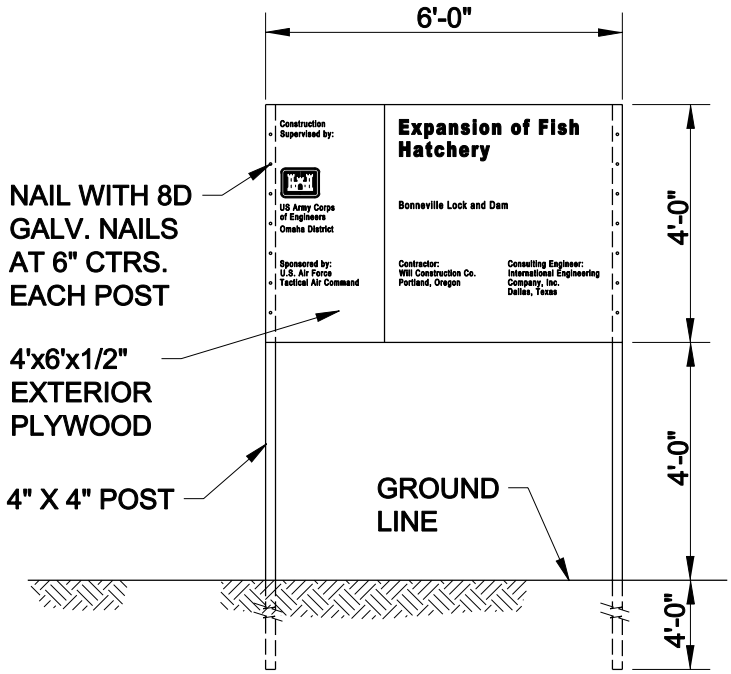

FRONT VIEW

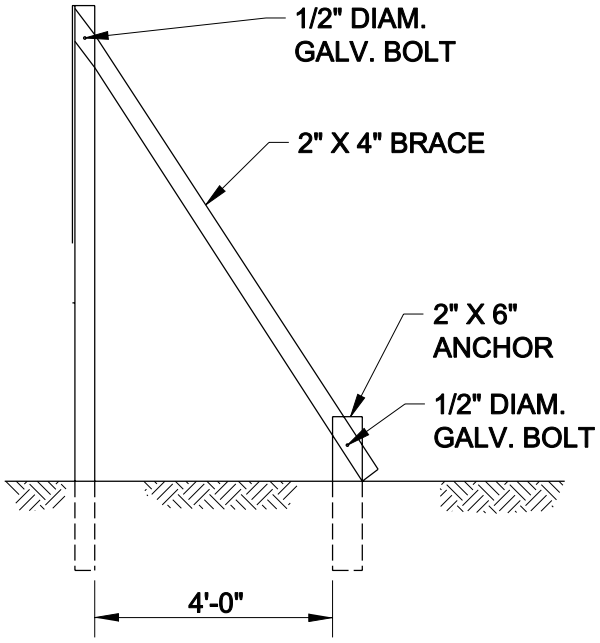

END VIEW

CIVIL WORKS
PROJECT SIGN DETAILS

NO SCALE

NOTES:

1. POSTS SHALL BE S4S.
2. PLYWOOD SHALL BE EXTERIOR TYPE, A-C GRADE.
3. BEFORE PAINTING, SURFACE SHALL BE CLEAN, DRY, FREE OF GREASE AND SANDED.
4. PAINT WITH ONE EXTERIOR OIL PRIME COAT AND EXTERIOR TYPE ALKYD, CONFORMING TO MASTER PAINTERS INSTITUTE MPI-9, MPI GLOSS LEVEL 6.

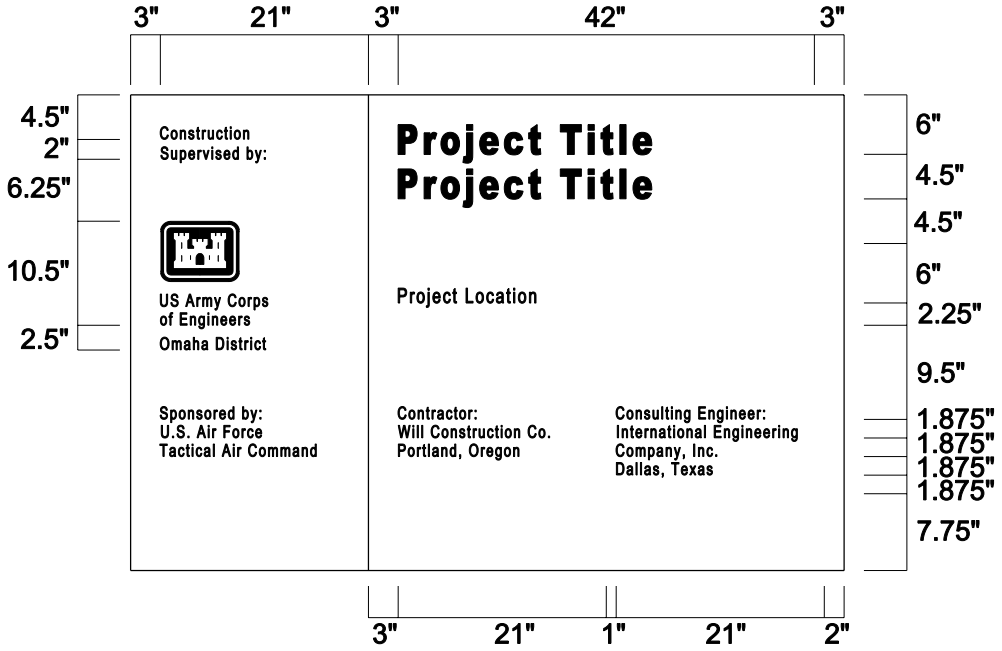

CIVIL WORKS
PROJECT SIGN DETAILS

NOTES:

1. THE LARGE 4' X 4' SECTION OF THE PANEL ON THE RIGHT IS TO BE WHITE WITH BLACK LEGEND. THE 2' X 4' SECTION OF THE SIGN ON THE LEFT WITH THE FULL CORPS SIGNATURE (REVERSE VERSION) SHALL BE SCREEN-PRINTED COMMUNICATION RED ON THE WHITE BACKGROUND.
2. PROJECT TITLE LETTERS SHALL BE 3" HELVETICA BOLD. PROJECT LOCATION LETTERS SHALL BE 1.5" HELVETICA REGULAR. ALL OTHER LETTERS SHALL BE 1.25" HELVETICA REGULAR..
3. DECALOMANIA FOR CORPS OF ENGINEERS SIGNATURE WILL BE FURNISHED BY THE CONTRACTING OFFICER FOR INSTALLATION BY THE CONTRACTOR.

SECTION TABLE OF CONTENTS

DIVISION 01 - GENERAL REQUIREMENTS

SECTION 01 30 00.24

OTHER ADMINISTRATIVE AND SPECIAL REQUIREMENTS

PART 1 GENERAL

1.1 REFERENCES
1.2 EQUIPMENT OWNERSHIP AND OPERATING EXPENSE SCHEDULE
1.3 CONTRACTOR SUPPLY AND USE OF ELECTRONIC SOFTWARE FOR PROCESSING CONSTRUCTION WAGE RATE REQUIREMENTS STATUTE CERTIFIED LABOR PAYROLLS
1.4 VETERANS EMPLOYMENT EMPHASIS FOR U.S. ARMY CORPS OF ENGINEERS CONTRACTS
1.5 CONTRACTOR PERFORMANCE EVALUATIONS
1.6 ANTITERRORISM (AT)/OPERATIONS SECURITY (OPSEC) PROVISIONS
1.7 EXCEPTION TO COMPLETION TIME AND LIQUIDATED DAMAGES
1.8 CONTRACT DRAWINGS AND SPECIFICATIONS
1.8.1 SETS FURNISHED
1.8.2 DISTRIBUTION
1.8.3 NOTIFICATION OF DISCREPANCIES
1.8.4 OMISSIONS
1.9 SUBMITTALS
1.10 PAYMENT
1.10.1 PROMPT PAYMENT ACT
1.10.2 PAYMENT FOR MATERIALS STORED OFFSITE
1.11 AVAILABILITY AND USE OF UTILITY SERVICES
1.12 TIME EXTENSIONS FOR UNUSUALLY SEVERE WEATHER
1.13 INSURANCE REQUIRED
1.14 SUPERVISION
1.14.1 Superintendent Qualifications
1.14.2 Minimum Communication Requirements
1.14.3 Duties
1.14.4 Non-Compliance Actions
1.15 PRECONSTRUCTION CONFERENCE
1.15.1 Attendees
1.16 CONTRACTOR QUALITY CONTROL (CQC)
1.17 NONDOMESTIC CONSTRUCTION MATERIALS
1.18 DAILY WORK SCHEDULES AND WEEKLY COORDINATION MEETINGS
1.19 PARTNERING
1.19.1 Team-Led (Informal) Partnering
1.20 PROFIT
1.21 LABOR CONDITIONS APPLICABLE TO TEMPORARY FACILITIES
1.22 DRAWING SCALES
1.23 CYBERSECURITY DURING CONSTRUCTION
1.23.1 Contractor Computer Equipment
1.23.1.1 Operating System
1.23.1.2 Anti-Malware Software
1.23.1.3 Passwords and Passphrases
1.23.1.4 Contractor Computer Cybersecurity Compliance Statements

PART 2 NOT USED

PART 3 NOT USED

-- End of Section Table of Contents --

SECTION 01 30 00.24

OTHER ADMINISTRATIVE AND SPECIAL REQUIREMENTS

PART 1 GENERAL

1.1 REFERENCES

The publications listed below form a part of this specification to the extent referenced. The publications are referred to within the text by the basic designation only.

U.S. ARMY CORPS OF ENGINEERS (USACE)

EM 385-1-1	(2024) Safety -- Safety and Occupational Health (SOH) Requirements

1.2 EQUIPMENT OWNERSHIP AND OPERATING EXPENSE SCHEDULE

In accordance with Federal Acquisition Regulation (FAR) 31.105(e)(1)(ii)(E), for the predetermined schedule of construction equipment use rates, use Engineer Pamphlet (EP) 1110-1-8, Construction Equipment Ownership and Operating Expense Schedule. Copies of each regional schedule may be obtained through the following internet site:

https://www.usace.army.mil/Cost-Engineering/EP1110-1-8/.

1.3 CONTRACTOR SUPPLY AND USE OF ELECTRONIC SOFTWARE FOR PROCESSING CONSTRUCTION WAGE RATE REQUIREMENTS STATUTE CERTIFIED LABOR PAYROLLS

a.Use a commercially available electronic system to process and submit certified payrolls electronically to the Government. The requirements for preparing, processing and providing certified labor payrolls are established by the Wage Rate Requirements statute.

b. Obtain and provide for all access, licenses, and other services required to provide for receipt, processing, certifying, electronically transmitting to the Government, and storing weekly payrolls and other data required for the Contractor to comply with the Wage Rate Requirements statute. Use the electronic payroll service to prepare, process, and maintain the relevant payrolls and basic records during all work under this construction contract. Use an electronic payroll service capable of preserving these payrolls and related basic records for the required three years after contract completion. Obtain and provide electronic system access to the Government, as required to comply with the Wage Rate Requirements over the duration of the construction contract.

The Contractor's provision and use of an electronic payroll processing system must meet the following basic functional criteria:

(1) commercially available;

(2) compliant with appropriate Wage Rate Requirements statute payroll provisions in the FAR;

(3) able to accommodate the required numbers of employees and subcontractors planned to be employed under the contract;

(4) capable of producing an Excel spreadsheet-compatible electronic output of weekly payroll records for export into an Excel spreadsheet to be imported into the contractor's mode of Resident Management System 3.0;

(5) demonstrated security of data and data entry rights;

(6) ability to produce Contractor-certified electronic versions of weekly payroll data;

(7) ability to identify erroneous entries and track the data/time of all versions of the certified Wage Rate Requirements statute payrolls submitted to the government over the life of the contract;

(8) capable of generating a durable record copy in a Compact Disc (CD) or Digital Versatile Disc (DVD) and Portable Document Format (PDF) file record of data from the system database at the end of the contract closeout. Provide this durable record copy of data from the electronic payroll processing system to the Government during contract closeout.

d. Include all Contractor-incurred costs related to the Contractor's provision and use of an electronic payroll processing service in the Contractor's price for the overall work under the contract. Do not include the costs for compliance with the Wage Rate Requirements statute by using electronic payroll processing services as a separately bid or reimbursed item under this contract.

1.4 VETERANS EMPLOYMENT EMPHASIS FOR U.S. ARMY CORPS OF ENGINEERS CONTRACTS

In addition to complying with the requirements outlined in FAR Part 22.13, FAR Clause 52.222-35, FAR Clause 52.222-37, DFARS 222.13 and Department of Labor regulations, U.S. Army Corps of Engineers (USACE) contractors and subcontractors at all tiers are encouraged to promote the training and employment of U.S. veterans while performing under a USACE contract. While no set-aside, evaluation preference, or incentive applies to the solicitation or performance under the resultant contract, USACE contractors are encouraged to seek out highly qualified veterans to perform services under this contract. The following resources are available to assist USACE contractors in their outreach efforts:

- U.S. Department of Labor Veterans’ Employment and Training Service (VETS): https://www.dol.gov/vets/
- Federal Veteran Employment Information: https://www.fedshirevets.gov/
- Veterans Opportunity to Work (VOW) Program: https://www.benefits.va.gov/vow/
- U.S. Army Warrior Transition Command Employment Index: https://wct.army.mil/modules/employers/index.html
- Hiring Our Heroes: https://www.uschamberfoundation.org/hiring-our-heroes

1.5 CONTRACTOR PERFORMANCE EVALUATIONS

See Federal Acquisition Regulation (FAR) Subpart 42.1105(e) for the requirements on past performance evaluations for construction contracts. For construction contracts valued at or above $900,000.00, including all modifications, the USACE will evaluate Contractor's performance using the

web-based Contractors Performance Assessment Reporting System (CPARS). After the USACE drafts an evaluation (interim or final), the Contractor will have the opportunity to access, review, comment and either concur or non-concur with the evaluation in the CPARS system for a period of 60 days. Access to the CPARS system requires either specific software called Public Key Infrastructure (PKI) certification (recommended method) or a username and password. The PKI certification is a Department of Defense recommendation and to provide security in electronic transactions. The certification software could cost approximately $110 - $125 per certificate per year and may be purchased from an External Certificate Authorities (ECA) vendor. Current information about the PKI certification process and contacting vendors can be found on the web site: https://www.cpars.gov.

1.6 ANTITERRORISM (AT)/OPERATIONS SECURITY (OPSEC) PROVISIONS

1. General security requirements and guidance:
The security requirements described below apply to all contract personnel (including employees of the prime Contractor ("Contractor") and all subcontractor employees) supporting the performance requirements of this contract. The Contractor is responsible for compliance with these security requirements. Questions regarding security matters shall be addressed to the designated Government representative (e.g., Contracting Officer Representative (COR), Requiring Activity (RA) representative, or Contracting Officer (if a COR or other RA representative is not appointed)). Contract personnel are critical to the overall security and safety of US Army Corps of Engineers (USACE) installations, facilities and activities, and security awareness training contributes to those efforts. The Department of Defense (DoD) and Army security training requirements specified below, if applicable, are performance requirements; all applicable contract personnel shall complete initial training within 30 days of contract award or the date new contract personnel begin performance on the contract. Within five business days from the completion of training, the Contractor shall provide written documentation (e.g., email or memorandum) to the Government representative. The documentation shall include the names of contract personnel trained and which training they completed; the Contractor shall maintain training records as part of their contract files and be prepared to provide copies of training certificates to the Government representative. Contractor personnel and vehicles are subject to search when entering federal installations. Additionally, all contract personnel shall comply with Force Protection Condition (FPCON) measures, Random Antiterrorism Measures (commonly referred to as "RAMs"), and Health Protection Condition (HPCON) measures. The Contractor is responsible for meeting performance requirements during elevated FPCON and/or HPCON levels in accordance with applicable RA plans and procedures-this includes identifying mission essential and non-mission essential personnel. In addition to the changes otherwise authorized by the changes clause of this contract, should the FPCON or HPCON levels at any individual facility or installation change, the Government may implement security changes that affect contract personnel. The Contractor shall ensure all contract personnel are aware of their security responsibilities, including any site-specific requirements identified in local policies or procedures.

2. Not Used

3. Physical security and access control requirements:
All contract personnel requiring physical access to a federal installation or facility shall comply with the access control procedures of that

location. Contract personnel requiring unescorted access to meet contract performance requirements on a DoD installation in the US shall be vetted by the installation/facility Provost Marshal/Directorate of Emergency Services/Security Office using the National Crime Information Center-Interstate Identification Index (commonly referred to as "NCIC-III") and Terrorist Screening Database (commonly referred to as "TSDB"). Contract personnel shall comply with all personal identity verification requirements specified in installation/facility policies and procedures. Contract personnel who do not meet requirements for unescorted access to USACE facilities shall coordinate escorted access with the Government representative, as needed. Contract personnel who receive keys, access cards, or lock combinations that provide access to government-owned property shall comply with key and lock control procedures of the RA.

4. Not Used

5. Not Used

6. Suspicious Activity Reporting training (e.g. iWATCH, CorpsWatch, or See Something, Say Something):
All contract personnel shall receive initial and annual refresher training from the RA representative on the local suspicious activity reporting program. This locally developed training provides contract personnel with general information on suspicious behavior, and guidance on reporting suspicious activity to the project manager, security representative or law enforcement entity.
This training shall be completed within 10 days prior to mobilization and within 30 calendar days of new employees commencing performance with the results reported to the COR. (submittal: iWATCH and/or CorpsWatch Training Sign-In Sheets).

7. Not Used

8. Not Used

9. Not Used

10. Not Used

11. Not Used

12. Not Used

13. Escorting in classified and/or sensitive areas: In accordance with applicable regulations, all contract personnel who do not possess the appropriate security clearance or access privileges will be escorted in areas where they may be exposed to classified information or operations, sensitive information or activities, or restricted areas. There is no classified information or operations associated with this contract.

14. Pre-screen candidates using E-Verify Program: Contractors shall comply with the requirements set forth in FAR clause 52.222-54 Employment Eligibility Verification and FAR Subpart 22.18 in using the E-Verify Program at (https://www.e-verify.gov/) (website subject to change) to meet the contract employment eligibility requirements. An initial list of verified/eligible candidates shall be provided to the COR no later than three business days after the initial contract award. When contracts are with individuals, the individuals will be required to complete a Form I-9, Employment Eligibility Verification, and submit it to the Contracting

Officer to become part of the official contract file.

15. Not Used

16. Not Used

1.7 EXCEPTION TO COMPLETION TIME AND LIQUIDATED DAMAGES

In case the Contracting Officer determines that seeding, sodding, and/or planting and/or the specified maintenance thereof is not feasible during the construction period, such work will be exempt from the completion time and liquidated damages. Accomplish this work during the first seeding, sodding, and/or planting period and the specified maintenance period following the completion date.

1.8 CONTRACT DRAWINGS AND SPECIFICATIONS

1.8.1 SETS FURNISHED

Utilize the bid drawings and specifications as amended in the performance of the work until the electronic Adobe Acrobat.pdf conformed specifications and contract drawings (i.e., bid drawings that have been posted with all amendment changes) are sent electronically to the Contractor. The work must conform to the contract drawings, set out in the drawing index, all of which form a part of these specifications. The work must also conform to any of the standard details bound or referenced herein. The Contractor shall be responsible for making copies of all plans and specifications as needed for the duration of the contract.

1.8.2 DISTRIBUTION

The Government will provide the Contractor with Adobe Acrobat.pdf contract drawings and conformed specification sets and editable CAD file drawings.

1.8.3 NOTIFICATION OF DISCREPANCIES

Check all drawing files furnished by the Government immediately upon their receipt and promptly notify the Contracting Officer of any discrepancies. Follow dimensions marked on drawings in lieu of scale measurements. Enlarged plans and details govern where the same work is shown at smaller scales. All scales shown are based on a standard drawing size of 22" x 34". If any other size drawings are furnished or plotted adjust the scales accordingly. Advise subcontractors of the above. Compare all drawings and verify the figures before laying out the work and take responsibility for any errors which might have been avoided thereby.

1.8.4 OMISSIONS

Omissions from the drawings or specifications or the misdescription of details of work which are manifestly necessary to carry out the intent of the drawings and specifications, or which are customarily performed, does not relieve the Contractor from performing such omitted or misdescribed details of the work. Perform as if fully and correctly set forth and described in the drawings and specifications.

1.9 SUBMITTALS

Government approval is required for submittals with a "G" designation; submittals not having a "G" designation are for information only. When

used, a designation following the "G" designation identifies the office that will review the submittal for the Government. Submit items below in accordance with Section 01 33 00 SUBMITTAL PROCEDURES:

SD-01 Preconstruction Submittals

iWATCH and/or CorpsWatch Training Sign-In Sheets;

Sign-In Sheets for all employee training required for iWATCH and/or CorpsWatch Training, see OPSEC paragraphs, subparagraph 6

E-Verify;

Provide E-Verify completion sheets required for OPSEC, see OPSEC paragraphs, subparagraph 14

Contractor Computer Cybersecurity Compliance Statements; G, RO

1.10 PAYMENT

1.10.1 PROMPT PAYMENT ACT

Pay requests authorized in GENERAL CONDITIONS (CONTRACT CLAUSES) clause: "Payments Under Fixed-Price Construction Contracts", will be paid pursuant to the clause, "Prompt Payment for Construction Contracts". Submit pay requests on ENG Form 93 and 93a, "Payment Estimate-Contract Performance" and "Continuation". All information and substantiation required by the identified contract clauses must be submitted with the ENG Form 93, and the required certification included on the last page of the ENG Form 93a, signed by an authorized contractor official and dated when signed. The designated billing office is the Office of the Area Engineer.

1.10.2 PAYMENT FOR MATERIALS STORED OFFSITE

a. As allowed under (FAR) 52.232-5 "Payments Under Fixed Price Construction Contracts", the Administrative Contracting Officer, at their discretion, may authorize progress payments for any material stored off-site provided:

(1) The Contractor furnishes satisfactory evidence that it has acquired title to such material and that the material will be used to perform this contract,

(2) Material is stored in such a manner to protect it from damage, fire, theft, etc.

(3) The Contractor provides evidence of insurance for material, and,

(4) Material is clearly identified and delineated by contract number for use on the applicable project.

b. The Administrative Contracting Officer reserves the right to inspect any off-site material prior to authorizing progress payments. Provide paid invoices listing the value of material and labor incorporated in the items.

1.11 AVAILABILITY AND USE OF UTILITY SERVICES

Use of public and private utilities will be as found available. Make

arrangements for use of public and private utilities.

1.12 TIME EXTENSIONS FOR UNUSUALLY SEVERE WEATHER

a. This provision specifies the procedure for the determination of time extensions for unusually severe weather in accordance with FAR 52.249-10 "Default: (Fixed-Price Construction)." In order for the Contracting Officer to award a time extension under this clause, the following conditions must be satisfied:

(1) The weather experienced at the project site during the contract period must be found to be unusually severe, that is, more severe than the adverse weather anticipated for the project location during any given month.

(2) The unusually severe weather must actually cause a delay to the completion of the project. The delay must be beyond the control and without the fault or negligence of the contractor.

b. The following schedule of monthly anticipated adverse weather delays is based on National Oceanic and Atmospheric Administration (NOAA) or similar data for the project location and will constitute the base line for monthly weather time evaluations. The Contractor's progress schedule must reflect these anticipated adverse weather delays in all weather-dependent activities.

MONTHLY ANTICIPATED ADVERSE WEATHER DELAY
WORK DAYS BASED ON (5) DAY WORK WEEK

Jan	14
Feb	12
Mar	8
Apr	4
May	4
Jun	5
Jul	3
Aug	3
Sep	3
Oct	3
Nov	5
Dec	13

c. Upon acknowledgment of the Notice to Proceed (NTP) and continuing throughout the contract, the contractor will record on the RMS daily Contractor Quality Control (CQC) report, any occurrence of adverse weather and resultant impact to normally scheduled work, within 24 hours of the event. Actual adverse weather delay days must prevent work on critical activities for 50 percent or more of the contractor's scheduled work day. Describe in the RMS daily CQC reports the critical path item that is being affected and provide the critical path activity number(s) from the current schedule. The contracting officer or their representative (COR) must acknowledge and accept the agreed upon occurrence of each adverse weather delay in RMS for the delays to be considered as adverse weather delays.

At the end of each month, identify the number of actual adverse weather delay days that includes days impacted by actual adverse weather (even if adverse weather occurred in previous month), calculated chronologically from the first to the last day of each month, and recorded as full days. If the number of actual adverse weather delay days exceeds the number of

days anticipated in paragraph b. above, the Contracting Officer will convert any qualifying delays to calendar days, giving full consideration for equivalent fair weather work days, and issue a modification in accordance with the GENERAL CONDITIONS (CONTRACT CLAUSES) clause entitled "Default (Fixed Price Construction)". (ER 415-1-15)

1.13 INSURANCE REQUIRED

In accordance with GENERAL CONDITIONS (CONTRACT CLAUSES) clause: "Insurance Work on a Government Installation," procure the following minimum insurance:

Type	Amount
Workmen's Compensation and Employer's Liability Insurance	$100,000
General Liability Insurance	$500,000 per occurrence
Automobile Liability Insurance	
Bodily injury	$200,000 per person and $500,000 per occurrence
Property damage	$ 20,000 per occurrence

(Coverages per FAR 28.307-2)

1.14 SUPERVISION

1.14.1 Superintendent Qualifications

Provide project superintendent with a minimum of 10 years' experience in construction with at least 5 of those years as a superintendent on projects similar in size and complexity. The individual must be familiar with the requirements of EM 385-1-1 and have experience in the areas of hazard identification and safety compliance. The individual must be capable of interpreting a critical path schedule and construction drawings. The qualification requirements for the alternate superintendent are the same as for the project superintendent. The Contracting Officer may request proof of the superintendent's qualifications at any point in the project if the performance of the superintendent is in question.

1.14.2 Minimum Communication Requirements

Have at least one qualified superintendent, or competent alternate, capable of reading, writing, and conversing fluently in the English language, on the job-site at all times during the performance of Contract work. In addition, if a Quality Control (QC) representative is required on the Contract, then that individual must also have fluent English communication skills.

1.14.3 Duties

The project superintendent is primarily responsible for managing subcontractors and coordinating day-to-day production and schedule adherence on the project. The superintendent is required to attend Red Zone meetings, partnering meetings, and quality control meetings. The superintendent or qualified alternative must be on-site at all times during the performance of this contract until the work is completed and accepted.

1.14.4 Non-Compliance Actions

The Project Superintendent is subject to removal by the Contracting Officer for non-compliance with requirements specified in the contract and for failure to manage the project to ensure timely completion. Furthermore, the Contracting Officer may issue an order stopping all or part of the work until satisfactory corrective action has been taken. No part of the time lost due to such stop orders is acceptable as the subject of claim for extension of time or excess costs or damages by the Contractor.

1.15 PRECONSTRUCTION CONFERENCE

Immediately after award, prior to commencing any work at the site, coordinate with the Contracting Officer a time and place to meet for the Preconstruction Conference. The conference must take place within 35 calendar days after award of the contract, but prior to commencement of any work at the site. The purpose of this conference is to discuss and develop a mutual understanding of the administrative requirements of the Contract including but not limited to: daily reporting, invoicing, value engineering, safety, base-access, outage requests, hot work permits, schedule requirements, quality control, schedule of prices or earned value report, shop drawings, submittals, cybersecurity, prosecution of the work, government acceptance, final inspections and contract close-out. Contractor must present and discuss their basic approach to scheduling the construction work and any required phasing.

1.15.1 Attendees

Contractor attendees must include the Project Manager, Superintendent, Site Safety and Health Officer (SSHO), Quality Control Manager and major subcontractors.

1.16 CONTRACTOR QUALITY CONTROL (CQC)

See Section 01 45 00 QUALITY CONTROL.

1.17 NONDOMESTIC CONSTRUCTION MATERIALS

The list of excepted nondomestic construction materials or their components referenced in the Buy American Construction Material Contract Clauses includes the list set forth in paragraph 25.104 of the Federal Acquisition Regulation.

1.18 DAILY WORK SCHEDULES AND WEEKLY COORDINATION MEETINGS

In order to closely coordinate work under this contract, prepare a written agenda/meeting minutes and attend a weekly coordination meeting with the Contracting Officer and Using Service. Submit written agenda/meeting minutes and proposed daily work schedule for the next two-week period for coordination and approval. Provide a copy of modifications (MODs), Serial Letters, Requests for Information (RFI's) and any other information that is needed in the minutes of the meeting. Include required temporary utility services, time and duration of interruptions, and protection of adjoining areas with the Contractor's proposed 2-week work schedule. At this meeting, also submit a schedule of proposed dates and times of all preparatory inspections to be performed during the next two weeks. Develop all schedules in accordance with Section 01 32 01.00 10 PROJECT SCHEDULE.

Accomplish coordination action by the Contracting Officer relative to these schedules during these weekly meetings. Complete and give daily reports to the Contracting Officer or Representative within 24 hours of work. Provide all official correspondence such as serial letters and RFI's, with attachments in one hardcopy original with original signatures and one electronic (Adobe pdf format) copy by email. The Government will consider the correspondence to be received when the official hardcopy or electronic copy is received by the designated office.

1.19 PARTNERING

To most effectively accomplish this Contract, the Contractor and Government must form a cohesive partnership with the common goal of drawing on the strength of each organization in an effort to achieve a successful project without safety mishaps, conforming to the Contract, within budget and on schedule. The partnering team must consist of personnel from both the Government and Contractor including project level and corporate level leadership positions. Key Personnel from the supported command, end user, Contractor, key subcontractors and the Designer of Record (DOR) (regardless of whether the contract is a design-build or a design-bid-build) are required to participate in the Partnering process.

1.19.1 Team-Led (Informal) Partnering

a. The Contracting Officer will coordinate the initial Team-Led (Informal) Partnering Session with key personnel of the project team, including Contractor and Government personnel. The Partnering Session will be co-led by the Government Construction Manager and Contractor's Project Manager.

b. The Initial Team-led Partnering session may be held concurrently with the Pre-Construction meeting. Partnering sessions will be held at a location mutually agreed to by the Contracting Officer and the Contractor, typically at a conference room on-base or at the Contractor's temporary trailer.

c. The Initial Team-Led Partnering Session will be conducted and facilitated using electronic media (a video and accompanying forms) provided by Contracting Officer.

d. The Partners will determine the frequency of the follow-on sessions.

e. Participants will bear their own costs for meals, lodging and transportation associated with Partnering.

1.20 PROFIT

a. Use the alternate structured approach weighted guidelines method of determining profit on any equitable adjustment change order or modification issued under this contract. The profit factors are as follows:

Factor	Rate	Weight	Value
Degree of Risk	20	See Item	
Relative difficulty of work	15	b. below	
Size of Job	15		
Period of performance	15		
Contractor's investment	5		

Assistance by Government	5
Subcontracting	25
	100

b. Based on the circumstances of each procurement action, weight each of the above factors from 0.03 to 0.12 as indicated below. Obtain the value by multiplying the rate by the weight. The value column when totaled indicates the fair and reasonable profit percentage under the circumstances of the particular procurement.

(1) Degree of Risk. Where the work involves no risk or the degree of risk is very small, the weighting should be 0.03; as the degree of risk increases, the weighting should be increased up to a maximum of 0.12. Lump sum items will have, generally, a higher weighted value than the unit price items for which quantities are provided. Other things to consider: the portion of the work to be done by subcontractors, nature of work, where work is to be performed, reasonableness of negotiated costs, amount of labor included in costs, and whether the negotiation is before or after performance of work. A weight of 0.03 is appropriate for after the fact equitable adjustments and/or settlements.

(2) Relative Difficulty of Work. If the work is difficult and complex, the weighting should be 0.12 and should be proportionately reduced to 0.03 on the simplest of jobs. This factor is tied, to some extent, to the degree of risk. Some things to consider: the nature of the work, by whom it is to be done (i.e. subcontractors, consultants), etc.

(3) Size of Job. All work not in excess of $100,000 shall be weighted at 0.12. Work estimated between $100,000 and $5,000,000 shall be proportionately weighted from 0.12 to 0.05. Work from $5,000,000 to $10,000,000 shall be weighted at 0.04. Work in excess of $10,000,000 shall be weighted at 0.03. It should be noted that control of fixed expenses generally improves with increased job magnitude.

(4) Periods of Performance. Jobs in excess of 24 months are to be weighted at 0.12. Jobs of lesser duration are to be proportionately weighted to a minimum of 0.03 for jobs not to exceed 30 days. No weight where additional time not required.

(5) Contractor's Investment. To be weighted from 0.03 to 0.12 on the basis of below average, average, and above average. Consider the amount of subcontracting, Government-furnished property or data (such as surveys), method of making progress payments, and any mobilization payment items.

(6) Assistance by Government. To be weighted from 0.12 to 0.03 on the basis of average to above average. Things to consider: use of Government-owned property, equipment and facilities, and expediting assistance.

(7) Subcontracting. To be weighted inversely proportional to the amount of subcontracting. Where 80 percent or more of the work is to be subcontracted, the weighting is to be 0.03 and such weighting proportionately increased to 0.12 where all the work is performed by the Contractor's own forces.

1.21 LABOR CONDITIONS APPLICABLE TO TEMPORARY FACILITIES

It is the position of the Department of Defense that the Davis-Bacon Act,

40 U.S.C. 276a is applicable to temporary facilities such as job headquarters, tool yards, batch plants, borrow pits, sandpits, rock quarries, and similar operations, provided they are dedicated exclusively, or nearly so, to performance of the contract or project, and provided they are adjacent or virtually adjacent to the site of the work and are established after receipt of the proposal or bid. Clause "Payrolls and Basic Records" of the GENERAL CONDITIONS (CONTRACT CLAUSES) is applicable to such operations.

1.22 DRAWING SCALES

All scales shown are based on a standard drawing size of 22" x 34". If any other size drawings are furnished or plotted, adjust the scales accordingly. Advise subcontractors of the above.

1.23 CYBERSECURITY DURING CONSTRUCTION

{For Reference Only: This subpart (and its subparts) relates to Access Control - 18, System and Services Acquisition - 3, Configuration Control Identifier - 00258.} Meet the following requirements throughout the construction process.

1.23.1 Contractor Computer Equipment

Contractor owned computers may be used for construction. When used, contractor computers must meet the following requirements:

1.23.1.1 Operating System

The operating system must be an operating system currently supported by the manufacturer of the operating system. The operating system must be current on security patches and operating system manufacturer required updates.

1.23.1.2 Anti-Malware Software

The computer must run anti-malware software from a reputable software manufacturer. Anti-malware software must be a version currently supported by the software manufacturer, must be current on all patches and updates, and must use the latest definitions file. All computers used on this project must be scanned using the installed software at least once per day.

1.23.1.3 Passwords and Passphrases

The passwords and passphrases for all computers must be changed from their default values. Passwords must be a minimum of eight characters with a minimum of one uppercase letter, one lowercase letter, one number and one special character.

1.23.1.4 Contractor Computer Cybersecurity Compliance Statements

Provide a single submittal containing completed Contractor Computer Cybersecurity Compliance Statements for each company using contractor owned computers. Contractor Computer Cybersecurity Compliance Statements must use the template published at https://www.wbdg.org/dod/ufgs/ufgs-forms-graphics-tables. Each Statement must be signed by a cybersecurity representative for the relevant company.

PART 2 NOT USED

PART 3 NOT USED

-- End of Section --

This page was intentionally left blank for duplex printing.

SECTION TABLE OF CONTENTS

DIVISION 01 - GENERAL REQUIREMENTS

SECTION 01 32 01.00 10

PROJECT SCHEDULE

PART 1 GENERAL

1.1 REFERENCES
1.2 SUBMITTALS
1.3 PROJECT SCHEDULER QUALIFICATIONS

PART 2 PRODUCTS

2.1 SOFTWARE
2.1.1 Government Default Software
2.1.2 Contractor Software
2.1.2.1 Primavera
2.1.2.2 Other Than Primavera

PART 3 EXECUTION

3.1 GENERAL REQUIREMENTS
3.1.1 Scheduling Expectations Kickoff Meeting(SEKO)
3.2 BASIS FOR PAYMENT AND COST LOADING
3.2.1 Activity Cost Loading
3.2.2 Cost Loading of Submittals
3.2.3 Withholdings / Payment Rejection
3.3 PROJECT SCHEDULE DETAILED REQUIREMENTS
3.3.1 Level of Detail Required
3.3.2 Activity Durations
3.3.3 Procurement Activities
3.3.4 Mandatory Activities
3.3.5 Government Activities
3.3.6 Standard Activity Coding Dictionary
3.3.6.1 Workers Per Day (WRKP)
3.3.6.2 Responsible Party Coding (RESP)
3.3.6.3 Area of Work Coding (AREA)
3.3.6.4 Modification Number (MODF)
3.3.6.5 Bid Item Coding (BIDI)
3.3.6.6 Phase of Work Coding (PHAS)
3.3.6.7 Category of Work Coding (CATW)
3.3.6.8 Feature of Work Coding (FOW)
3.3.7 Contract Milestones and Constraints
3.3.7.1 Project Start Date Milestone and Constraint
3.3.7.2 End Project Finish Milestone and Constraint
3.3.7.3 Interim Completion Dates and Constraints
3.3.7.3.1 Start Phase
3.3.7.3.2 End Phase
3.3.8 Adverse Weather
3.3.9 Calendars
3.3.10 Open Ended Logic

3.3.11 Default Progress Data Disallowed
3.3.12 Out-of-Sequence Progress
3.3.13 Added and Deleted Activities
3.3.14 Original Durations
3.3.15 Leads, Lags, and Start to Finish Relationships
3.3.16 Retained Logic
3.3.17 Percent Complete
3.3.18 Remaining Duration
3.3.19 Cost Loading of Closeout Activities
3.3.19.1 As-Built Drawings
3.3.19.2 O & M Manuals
3.3.20 Early Completion Schedule and the Right to Finish Early
3.4 PROJECT SCHEDULE SUBMISSIONS
3.4.1 Preliminary Project Schedule Submission
3.4.2 Initial Project Schedule Submission
3.4.3 Periodic Schedule Updates
3.5 SUBMISSION REQUIREMENTS
3.5.1 Electronic Scheduling Data
3.5.2 Narrative Report
3.5.3 Schedule Reports
3.5.3.1 Activity Report
3.5.3.2 Logic Report
3.5.3.3 Total Float Report
3.5.3.4 Earnings Report by CLIN
3.5.3.5 Scheduling and Leveling Report
3.5.4 Network Diagram
3.5.4.1 Continuous Flow
3.5.4.2 Project Milestone Dates
3.5.4.3 Critical Path
3.5.4.4 Grouping and Sorting
3.5.4.5 Cash Flow / Schedule Variance Control (SVC) Diagram
3.6 PERIODIC SCHEDULE UPDATE
3.6.1 Periodic Schedule Update Meetings
3.6.2 Update Submission Following Progress Meeting
3.7 WEEKLY PROGRESS MEETINGS
3.8 REQUESTS FOR TIME EXTENSIONS
3.8.1 Justification of Delay
3.8.2 Changes That Do Not Cause Delay
3.8.3 Time Impact Analysis (Prospective Analysis)
3.8.4 Forensic Schedule Analysis (Retrospective Analysis)
3.8.5 Fragmentary Network (Fragnet)
3.8.6 Time Extension
3.8.7 Impact to Early Completion Schedule
3.9 FAILURE TO ACHIEVE PROGRESS
3.9.1 Artificially Improving Progress
3.9.2 Failure to Perform
3.9.3 Recovery Schedule
3.10 OWNERSHIP OF FLOAT
3.11 TRANSFER OF SCHEDULE DATA INTO RESIDENT MANAGEMENT SYSTEM
3.12 PRIMAVERA P6 MANDATORY REQUIREMENTS

-- End of Section Table of Contents --

SECTION 01 32 01.00 10

PROJECT SCHEDULE

PART 1 GENERAL

1.1 REFERENCES

The publications listed below form a part of this specification to the extent referenced. The publications are referred to within the text by the basic designation only.

AACE INTERNATIONAL (AACE)

AACE 29R-03	(2011) Forensic Schedule Analysis
AACE 52R-06	(2006) Time Impact Analysis - As Applied in Construction
AACE 84R-13	(2015) Planning and Accounting for Adverse Weather

AMERICAN SOCIETY OF CIVIL ENGINEERS (ASCE)

ASCE 67-17	(2017) Schedule Delay Analysis

U.S. ARMY CORPS OF ENGINEERS (USACE)

ER 1-1-11	(2017) Administration -- Project Schedules

1.2 SUBMITTALS

Government approval is required for submittals with a "G" classification. Submittals not having a "G" classification are for information only. When used, a code following the "G" classification identifies the office that will review the submittal for the Government. Submit the following in accordance with Section 01 33 00 SUBMITTAL PROCEDURES:

SD-01 Preconstruction Submittals

Project Scheduler Qualifications; G, AO

Preliminary Project Schedule; G, AO

Initial Project Schedule; G, AO

Periodic Schedule Update; G, AO

1.3 PROJECT SCHEDULER QUALIFICATIONS

Designate an authorized representative to be responsible for the preparation of the schedule and all required updating and production of reports. The Designated Project Scheduler must have prepared and maintained at least three previous construction schedules for projects of similar size and complexity to this contract, using Primavera P6. Representative must have a comprehensive knowledge of CPM scheduling

principles and application.

PART 2 PRODUCTS

2.1 SOFTWARE

The scheduling software utilized to produce and update the schedules required herein must be capable of meeting all requirements of this specification.

2.1.1 Government Default Software

The Government uses Primavera P6. Ensure exported schedule files are compatible with the version of P6 used by the Government.

2.1.2 Contractor Software

Scheduling software used by the contractor must be commercially available from the software vendor for purchase with vendor software support agreements available. The software routine used to create the required sdef file must be created and supported by the software manufacturer.

2.1.2.1 Primavera

If Primavera P6 is selected for use, provide the "xer" export file in a version of P6 importable by the Government system. Verify at the SEKO meeting which version of P6 is in use by the Government. Export the schedule in a version of P6 no newer than that used by the Government.

2.1.2.2 Other Than Primavera

If the Contractor chooses software other than Primavera P6, that is compliant with this specification, provide for the Government's use two licenses, two computers, and training for two Government employees in the use of the software. These computers will be stand-alone and not connected to Government network. Computers and licenses will be returned at project completion.

PART 3 EXECUTION

3.1 GENERAL REQUIREMENTS

Prepare for approval a Project Schedule, as specified herein, pursuant to FAR Clause 52.236-15 Schedules for Construction Contracts. Show in the schedule the proposed sequence to perform the work and dates contemplated for starting and completing all schedule activities. The scheduling of the entire project is required. The scheduling of construction is the responsibility of the Contractor. Contractor management personnel must actively participate in its development. Subcontractors, and suppliers working on the project must also contribute in developing and maintaining an accurate Project Schedule. Provide a schedule that is a forward planning as well as a project monitoring tool. Use the Critical Path Method (CPM) of network calculation to generate all Project Schedules. Prepare each Project Schedule using the Precedence Diagram Method (PDM).

3.1.1 Scheduling Expectations Kickoff Meeting(SEKO)

In conjunction with the post award conference or pre construction conference the Government and the Contractor will hold a separate and

distinct Scheduling Expectations Kickoff Meeting(SEKO). The intent of this meeting is for the Government to review with the contractor the requirements of the scheduling specification, communicate the Government's expectations regarding schedule development and management, and answer any questions the Contractor may have regarding the schedule requirements.

3.2 BASIS FOR PAYMENT AND COST LOADING

The schedule is the basis for determining contract earnings during each update period and therefore the amount of each progress payment. The aggregate value of all activities coded to a contract CLIN must equal the value of the CLIN. Match the progress payment "Pay Period Thru" date in RMS to the schedule data date.

3.2.1 Activity Cost Loading

Activity cost loading must be reasonable and without front-end loading. Activities with a negative cost loading is not allowed. Provide additional documentation to demonstrate reasonableness if requested by the Contracting Officer.

3.2.2 Cost Loading of Submittals

No costs are to be assigned to activities for the preparation, review, or approval of submittals, except as described under paragraph COST LOADING OF CLOSEOUT ACTIVITIES, paragraph AS-BUILT DRAWINGS, and paragraph O&M MANUALS.

3.2.3 Withholdings / Payment Rejection

Failure to meet the requirements of this specification may result in the disapproval of the preliminary, initial, or periodic schedule updates and subsequent rejection of payment requests until compliance is met.

In the event that the Contracting Officer directs schedule revisions and those revisions have not been included in subsequent Project Schedule revisions or updates, the Contracting Officer may withhold 10 percent of pay request amount from each payment period until such revisions to the project schedule have been made.

3.3 PROJECT SCHEDULE DETAILED REQUIREMENTS

3.3.1 Level of Detail Required

Develop the Project Schedule to the appropriate level of detail to address major milestones and to allow for satisfactory project planning and execution. Failure to develop the Project Schedule to an appropriate level of detail will result in its disapproval. The Contracting Officer will consider, but is not limited to, the following characteristics and requirements to determine appropriate level of detail:

3.3.2 Activity Durations

Reasonable activity durations are those that allow the progress of ongoing activities to be accurately determined between update periods. Non-procurement activities Original Durations (OD) are not to exceed 20 workdays or 30 calendar days.

3.3.3 Procurement Activities

Include in the schedule activities associated with the critical submittals and their approvals, procurement, fabrication, and delivery of long lead materials, equipment, fabricated assemblies, and supplies. Long lead procurement activities are those with an anticipated procurement sequence of over 90 calendar days.

3.3.4 Mandatory Activities

Include the following activities in the initial project schedule and all updates.

a. Submission, review and acceptance of SD-01 Preconstruction Submittals (individual activity for each).

b. Submission, review and acceptance of features requiring design completion

c. Submission of mechanical/electrical/information systems layout drawings.

d. Submission and approval of O & M manuals.

e. Submission and approval of as-built drawings.

f. Submission and approval of DD1354 data and installed equipment lists.

g. Submission and approval of testing and air balance (TAB).

h. Submission of TAB specialist design review report.

i. Submission and approval of fire protection specialist.

j. Submission and approval of Building Commissioning Plan, Controls testing plan, test data, and reports: Develop the schedule logic associated with testing and commissioning of mechanical systems to a level of detail consistent with the contract commissioning requirements. All tasks associated with building testing and commissioning will be completed prior to submission of building commissioning report and subsequent contract completion.

   These activities may include but are not limited to: air and water balancing, building commissioning -functional performance testing, controls testing, and performance verification testing. Include other systems testing, if required. Include additional commissioning requirements noted elsewhere in the Contract as required in the schedule and discuss during the SEKO meeting, noted in paragraph SCHEDULING EXPECTATIONS KICKOFF MEETING (SEKO).

k. Contractor's pre-final inspection.

m. Correction of punch list from Contractor's pre-final inspection.

n. Government's pre-final inspection.

o. Correction of punch list from Government's pre-final inspection.

p. Final inspection.

3.3.5 Government Activities

Show in schedule, Government and other agency activities that could impact progress. These activities include, but are not limited to approvals, environmental permit approvals by State regulators, inspections, utility tie-in, Government Furnished Equipment (GFE) and Notice to Proceed (NTP) for phasing requirements.

3.3.6 Standard Activity Coding Dictionary

Use the activity coding structure defined in the Standard Data Exchange Format (SDEF) in ER 1-1-11. This exact structure is mandatory. Develop and assign all Activity Codes to activities as detailed herein.

The SDEF format is as follows:

Field	Activity Code	Length	Description
1	WRKP	3	Workers per day
2	RESP	4	Responsible party
3	AREA	4	Area of work
4	MODF	6	Modification Number
5	BIDI	6	Bid Item (CLIN)
6	PHAS	2	Phase of work
7	CATW	1	Category of work
8	FOW	20	Feature of work*

*Some systems require that FEATURE OF WORK values be placed in several activity code fields. The notation shown is for Primavera P6. Refer to the specific software guidelines with respect to the FEATURE OF WORK field requirements.

3.3.6.1 Workers Per Day (WRKP)

Assign Workers per Day for all field construction or direct work activities, if directed by the Contracting Officer. Workers per day is based on the average number of workers expected each day to perform a task for the duration of that activity.

3.3.6.2 Responsible Party Coding (RESP)

Assign responsibility code for all activities to the Prime Contractor, Subcontractor(s) or Government agency(ies) responsible for performing the activity.

a. Activities coded with a Government Responsibility code include, but are not limited to: Government approvals, Government design reviews,

environmental permit approvals by State regulators, Government Furnished Property/Equipment (GFP) and Notice to Proceed (NTP) for phasing requirements.

b. Activities cannot have more than one Responsibility Code. Examples of acceptable activity code values are: DOR (for the designer of record); ELEC (for the electrical subcontractor); MECH (for the mechanical subcontractor); and GOVT (for USACE).

3.3.6.3 Area of Work Coding (AREA)

Assign Work Area code to activities based upon the work area in which the activity occurs. Define work areas based on resource constraints or space constraints that would preclude a resource, such as a particular trade or craft work crew from working in more than one work area at a time due to restraints on resources or space. Examples of Work Area Coding include different areas within a floor of a building, different floors within a building, and different buildings within a complex of buildings. Activities cannot have more than one Work Area Code.

3.3.6.4 Modification Number (MODF)

Assign a Modification Number Code to any activity or sequence of activities added to the schedule as a result of a Contract Modification, when approved by Contracting Officer. Key all Code values to the Government's modification numbering system. An activity can have only one Modification Number Code.

3.3.6.5 Bid Item Coding (BIDI)

Assign a Bid Item Code to all activities using the Contract Line Item Number (CLIN) to which the activity belongs, even when an activity is not cost loaded. An activity can have only one BIDI Code.

3.3.6.6 Phase of Work Coding (PHAS)

Assign Phase of Work Code to all activities. Examples of phase of work are procurement phase and construction phase. Each activity can have only one Phase of Work code.

a. Code proposed fast track design and construction phases proposed to allow filtering and organizing the schedule by fast track design and construction packages.

b. If the contract specifies phasing with separately defined performance periods, identify a Phase Code to allow filtering and organizing the schedule accordingly.

3.3.6.7 Category of Work Coding (CATW)

Assign a Category of Work Code to all activities. Category of Work Codes include, but are not limited to construction submittal, procurement, fabrication, weather sensitive installation, non-weather sensitive installation, start-up, and testing activities. Each activity can have no more than one Category of Work Code.

3.3.6.8 Feature of Work Coding (FOW)

Assign a Feature of Work Code to appropriate activities based on the

Definable Feature of Work to which the activity belongs based on the approved QC plan.

Definable Feature of Work is defined in Section 01 45 00 QUALITY CONTROL. An activity can have only one Feature of Work Code.

3.3.7 Contract Milestones and Constraints

Milestone activities are to be used for significant project events including, but not limited to, project phasing, project start and end activities, or interim completion dates. The use of artificial float constraints such as "zero free float" or "zero total float" are prohibited.

Mandatory constraints that ignore or affect network logic are prohibited. No constrained dates are allowed in the schedule other than those specified herein. Submit additional constraints to the Contracting Officer for approval on a case by case basis.

3.3.7.1 Project Start Date Milestone and Constraint

The first activity in the project schedule must be a start milestone titled "NTP Acknowledged," which must have a "Start On" constraint date equal to the date that the NTP is acknowledged.

3.3.7.2 End Project Finish Milestone and Constraint

The last activity in the schedule must be a finish milestone titled "End Project."

Constrain the project schedule to the Contract Completion Date in such a way that if the schedule calculates an early finish, then the float calculation for "End Project" milestone reflects positive float on the longest path. If the project schedule calculates a late finish, then the "End Project" milestone float calculation reflects negative float on the longest path.

3.3.7.3 Interim Completion Dates and Constraints

Constrain contractually specified interim completion dates to show negative float when the calculated late finish date of the last activity in that phase is later than the specified interim completion date.

3.3.7.3.1 Start Phase

Use a start milestone as the first activity for a project phase. Call the start milestone "Start Phase X" where "X" refers to the phase of work.

3.3.7.3.2 End Phase

Use a finish milestone as the last activity for a project phase. Call the finish milestone "End Phase X" where "X" refers to the phase of work.

3.3.8 Adverse Weather

Ensure anticipated adverse weather is accounted for in the Project Schedule. AACE 84R-13 provides methodologies for techniques in planning for adverse weather. The preferred methodology is the use of a weather calendar. If a method other than a weather calendar is proposed, discuss

the reason during the SEKO meeting.

3.3.9 Calendars

Schedule activities on a Calendar to which the activity logically belongs. Develop calendars to accommodate any contract defined work period such as a 7-day calendar for Government Acceptance activities, concrete cure times, etc. Develop the default Calendar to match the physical work plan with non-work periods identified including weekends and holidays. Develop Seasonal Calendar(s) and assign to seasonally affected activities as applicable.

If a weather calendar is used its implementation and execution is to be in accordance with AACE 84R-13

3.3.10 Open Ended Logic

Only two open ended activities are allowed: the first activity "NTP Acknowledged" is to have no predecessor logic, and the last activity -"End Project" is to have no successor logic. Except as noted above, each activity must have at least a start-to-start or finish-to-start relationship with its predecessor and a finish-to-finish or finish-to-start relationship with its successor.

Predecessor open ended logic may be allowed in a time impact analyses upon the Contracting Officer's approval.

3.3.11 Default Progress Data Disallowed

Actual Start and Finish dates must not automatically update with default mechanisms included in the scheduling software. Updating of the percent complete and the remaining duration of any activity must be independent functions. Disable program features that calculate one of these parameters from the other. Activity Actual Start (AS) and Actual Finish (AF) dates assigned during the updating process must match those dates provided in the Contractor Quality Control Reports. Failure to document the AS and AF dates in the Daily Quality Control report will result in disapproval of the Contractor's schedule.

3.3.12 Out-of-Sequence Progress

Activities that have progressed before all preceding logic has been satisfied (Out-of-Sequence Progress) will be allowed only on a case-by-case basis subject to approval by the Contracting Officer. Propose logic corrections to eliminate out of sequence progress or justify not changing the sequencing for approval prior to submitting an updated project schedule. Address out of sequence progress or logic changes in the Narrative Report and in the periodic schedule update meetings.

3.3.13 Added and Deleted Activities

Do not delete activities from the project schedule or add new activities to the schedule without approval from the Contracting Officer. Activity ID and description changes are considered new activities and cannot be changed without Contracting Officer approval.

3.3.14 Original Durations

Activity Original Durations (OD) must be reasonable to perform the work

item. OD changes are prohibited unless justification is provided and approved by the Contracting Officer.

3.3.15 Leads, Lags, and Start to Finish Relationships

Lags must be reasonable as determined by the Government and not used in place of realistic original durations, must not be in place to artificially absorb or create float, or to replace proper schedule logic.

a. Leads (negative lags) are prohibited.

b. Start to Finish (SF) relationships are prohibited.

3.3.16 Retained Logic

Schedule calculations must retain the logic between predecessors and successors ("retained logic" mode) even when the successor activity(s) starts and the predecessor activity(s) has not finished (out-of-sequence progress). Software features that in effect sever the tie between predecessor and successor activities when the successor has started and the predecessor logic is not satisfied ("progress override") are not allowed.

3.3.17 Percent Complete

Update the percent complete for each activity started, based on the realistic assessment of earned value. Activities which are complete but for remaining minor punch list work and which do not restrain the initiation of successor activities may be declared 100 percent complete to allow for proper schedule management. Budgeted cost of activity is to be reduced by the amount needed to correct deficiency. The activity referenced in paragraph COST LOADING of CLOSEOUT ACTIVITIES must have its budgeted cost increased by this amount.

3.3.18 Remaining Duration

Update the remaining duration for each activity based on the number of estimated workdays it will take to complete the activity. Remaining duration may not mathematically correlate with percentage found under paragraph entitled Percent Complete. The remaining duration for unstarted activities are not to be less than its original duration.

3.3.19 Cost Loading of Closeout Activities

Cost load the "Correction of punch list from Government pre-final inspection" activity(ies) not less than 1 percent of the present contract value. Activity(ies) may be declared 100 percent complete upon the Government's verification of completion and correction of all punch list work identified during Government pre-final inspection(s).

3.3.19.1 As-Built Drawings

If there is no separate contract line item (CLIN) for as-built drawings, cost load the "Submission and approval of as-built drawings" activity not less than $35,000 or 1 percent of the present contract value, whichever is greater, up to $200,000. Activity will be declared 100 percent complete upon the Government's approval.

3.3.19.2 O & M Manuals

Cost load the "Submission and approval of O & M manuals" activity not less than $20,000. Activity will be declared 100 percent complete upon the Government's approval of all O & M manuals.

3.3.20 Early Completion Schedule and the Right to Finish Early

An Early Completion Schedule is an Initial Project Schedule (IPS) that indicates all scope of the required contract work will be completed before the contractually required completion date.

a. No IPS indicating an Early Completion will be accepted without being fully resource-loaded (including crew sizes and manhours) and the Government agreeing that the schedule is reasonable and achievable.

b. The Government is under no obligation to accelerate work items it is responsible for to ensure that the early completion is met nor is it responsible to modify incremental funding (if applicable) for the project to meet the contractor's accelerated work.

3.4 PROJECT SCHEDULE SUBMISSIONS

Provide the submissions as described below. The data reports and network diagrams required for each submission are contained in paragraph SUBMISSION REQUIREMENTS. If the Contractor fails or refuses to furnish the information and schedule updates as set forth herein, the Contractor will be deemed not to have provided an estimate upon which a progress payment can be made.

Review comments made by the Government on the schedule(s) do not relieve the Contractor from compliance with requirements of the Contract Documents.

3.4.1 Preliminary Project Schedule Submission

Within 15 calendar days after the NTP is acknowledged, submit the Preliminary Project Schedule defining the planned operations detailed for the first 90 calendar days for approval. The approved Preliminary Project Schedule will be used for payment purposes not to exceed 90 calendar days after NTP. Completely cost load the Preliminary Project Schedule to balance the contract award CLINS shown on the Price Schedule. The Preliminary Project Schedule may be summary in nature for the remaining performance period. It must be early start and late finish constrained and logically tied as specified. The Preliminary Project Schedule forms the basis for the Initial Project Schedule specified herein and must include all of the required plan and program preparations, submissions and approvals identified in the contract (for example, Quality Control Plan, Safety Plan, and Environmental Protection Plan) as well as design activities, planned submissions of all early design packages, permitting activities, design review conference activities, and other non-construction activities intended to occur within the first 90 calendar days. Government acceptance of the associated design package(s) and all other specified Program and Plan approvals must occur prior to any planned construction activities. Code activities that are summary in nature, after the first 90 calendar days, with the following activity codes: Bid Item (CLIN) code (BIDI), Responsibility Code (RESP), and Feature of Work code (FOW).

3.4.2 Initial Project Schedule Submission

Submit the Initial Project Schedule for approval within 42 calendar days after notice to proceed is issued. The schedule must demonstrate a reasonable and realistic sequence of activities which represent all work through the entire contract performance period. No payment will be made for work items not fully detailed in the Project Schedule.

3.4.3 Periodic Schedule Updates

Update the Project Schedule on a regular basis, monthly at a minimum. Provide a draft Periodic Schedule Update for review at the schedule update meetings as prescribed in the paragraph PERIODIC SCHEDULE UPDATE MEETINGS. These updates will enable the Government to assess Contractor's progress.

a. Update information including Actual Start Dates (AS), Actual Finish Dates (AF), Remaining Durations (RD), and Percent Complete. Updated information is subject to the approval of the Government at the meeting.

b. AS and AF dates must match the date(s) reported on the Contractor's Quality Control Report for an activity start or finish.

3.5 SUBMISSION REQUIREMENTS

Submit the following items for the Preliminary Schedule, Initial Schedule, and every Periodic Schedule Update throughout the life of the project:

3.5.1 Electronic Scheduling Data

Provide electronic scheduling data containing the current project schedule and all previously submitted schedules in the format of the scheduling software (e.g. .xer). Also include the Narrative Report and all required Schedule Reports. The electronic file is to identify the type of schedule (Preliminary, Initial, Update), full contract number, Data Date and schedule file name. Each schedule must have a unique file name and use project specific settings. The file naming convention is to be determined at SEKO meeting.

3.5.2 Narrative Report

Provide a Narrative Report with each schedule submission. The Schedule Narrative Report is a "stand alone" report in PDF or Word format. Title the report "Schedule Narrative Report". Show the Report date, schedule name, and contract number on the first page. Indicate who is responsible for the schedule update and narrative report. Provide a brief description of the Project Scope. The Narrative Report is expected to communicate to the Government the thorough analysis of the schedule output and the plans to compensate for problems, either current or potential, which are revealed through that analysis. Include the following information at a minimum in the Narrative Report:

a. Identify and discuss the work scheduled to start in the next update period.

b. Describe activities along the critical path in addition to activities on the next float path after the critical path.

c. Describe current and anticipated problem areas, delaying factors and their impact, and an explanation of corrective actions taken or required to be taken. Identify the party responsible for delay, if applicable.

d. Identify and explain why activities, based on their calculated late dates, should have either started or finished during the update period but did not.

e. Identify and discuss all schedule changes by activity ID and activity name including what specifically was changed and why the change was needed. Include at a minimum new and deleted activities, logic changes, duration changes, calendar changes, lag changes, resource changes, and actual start and finish date changes.

f. Identify and discuss out-of-sequence work.

g. If the longest path changes from a monthly update to the next, provide an explanation of the factors driving the change.

h. Respond to USACE Schedule Review Comments from the previous update(s).

3.5.3 Schedule Reports

The format, filtering, organizing, and sorting for each schedule report will be as directed by the Contracting Officer. Typically, reports contain Activity Numbers, Activity Description, Original Duration, Remaining Duration, Early Start Date, Early Finish Date, Late Start Date, Late Finish Date, Total Float, Actual Start Date, Actual Finish Date, and Percent Complete. Provide the reports electronically in .pdf format. The following lists typical reports that will be requested:

3.5.3.1 Activity Report

List of all activities sorted according to activity number.

3.5.3.2 Logic Report

List of detailed predecessor and successor activities for every activity in ascending order by activity number.

3.5.3.3 Total Float Report

A list of all incomplete activities sorted in ascending order of total float. List activities which have the same amount of total float in ascending order of Early Start Dates. Do not show completed activities on this report.

3.5.3.4 Earnings Report by CLIN

A compilation of the Total Earnings on the project from the NTP to the data date, which reflects the earnings of activities based on the agreements made in the schedule update meeting defined herein. Provided a complete schedule update has been furnished, this report serves as the basis of determining progress payments. Group activities by CLIN number and sort by activity number. Provide a total CLIN percent earned value, CLIN percent complete, and project percent complete. The printed report must contain the following for each activity: the Activity Number, Activity Description, Original Budgeted Amount, Earnings to Date, Earnings

this period, Total Quantity, Quantity to Date, and Percent Complete (based on cost).

3.5.3.5 Scheduling and Leveling Report

Provide a Scheduling/Leveling Report generated from the current project schedule being submitted.

3.5.4 Network Diagram

The Network Diagram is required for the Preliminary, Initial and Periodic Updates. Depict and display the order and interdependence of activities and the sequence in which the work is to be accomplished. The Contracting Officer will use, but is not limited to, the following conditions to review compliance with this paragraph:

3.5.4.1 Continuous Flow

Show a continuous flow from left to right with no arrows from right to left. Show the activity number, description, duration, and estimated earned value on the diagram.

3.5.4.2 Project Milestone Dates

Show dates on the diagram for start of project, any contract required interim completion dates, and contract completion dates.

3.5.4.3 Critical Path

Show all activities on the critical path. The critical path is defined as the longest path.

3.5.4.4 Grouping and Sorting

Group and sort activities as directed to assist in the understanding of the activity sequence. Typically, this flow will group activities by major elements of work, category of work, work area and/or responsibility.

3.5.4.5 Cash Flow / Schedule Variance Control (SVC) Diagram

With each schedule submission, provide a SVC diagram showing 1) Cash Flow S-Curves indicating planned project cost based on projected early and late activity finish dates, and 2) Earned Value to-date.

3.6 PERIODIC SCHEDULE UPDATE

3.6.1 Periodic Schedule Update Meetings

Conduct periodic schedule update meetings for the purpose of reviewing the proposed Periodic Schedule Update, Narrative Report, Schedule Reports, and progress payment. Conduct meetings at least monthly within five days of the proposed schedule data date. Provide a computer with the scheduling software loaded and a projector which allows all meeting participants to view the proposed schedule during the meeting. The Contractor's authorized scheduler must organize, group, sort, filter, perform schedule revisions as needed and review functions as requested by the Contractor and/or Government. The Contractor scheduler must attend in person unless virtual attendance is approved by Contracting Officer. The meeting is a working interactive exchange which allows the Government and Contractor

the opportunity to review the updated schedule on a real time and interactive basis. The meeting will last no longer than 8 hours. Submit schedule file and narrative to the Government a minimum of two workdays in advance of the meeting. The Contractor's Project Manager must attend the meeting with the authorized representative of the Contracting Officer. Superintendents, foremen and major subcontractors must attend the meeting as required to discuss the project schedule and work. Following the schedule update meeting, make corrections to the schedule and resubmit, following the required schedule naming convention. Include only those changes approved by the Government in the schedule review meeting. Only approved schedules may be used to generate invoices for payment.

3.6.2 Update Submission Following Progress Meeting

Submit the complete Periodic Schedule Update of the Project Schedule containing all approved progress, revisions, and adjustments, pursuant to paragraph SUBMISSION REQUIREMENTS not later than 4 workdays after the periodic schedule update meeting.

3.7 WEEKLY PROGRESS MEETINGS

Conduct a weekly meeting with the Government (or as otherwise mutually agreed to) between the meetings described in paragraph entitled PERIODIC SCHEDULE UPDATE MEETINGS for the purpose of jointly reviewing the actual progress of the project as compared to the as planned progress and to review planned activities for the upcoming two weeks. Use the current approved schedule update for the purposes of this meeting and for the production and review of reports. At the weekly progress meeting, address the status of RFIs, RFPs and Submittals.

3.8 REQUESTS FOR TIME EXTENSIONS

ASCE 67-17 provides delay analysis guidelines. If there is a conflict between the contract and guidance provided in ASCE 67-17, the contract will govern. Provide justification of delay to the Contracting Officer in accordance with the contract provisions and clauses for approval, within 10 days of a delay occurring. Also prepare a time impact analysis for each Government request for proposal (RFP).

3.8.1 Justification of Delay

Provide a description of the event(s) that caused the delay and/or impact to the work. As part of the description, identify all schedule activities impacted. Show that the event that caused the delay/impact was the responsibility of the Government. Provide a time impact analysis that demonstrates the effects of the delay or impact on the project completion date, or interim completion date(s). Evaluate multiple impacts chronologically; each with its own justification of delay. With multiple impacts consider any concurrency of delay. A time extension and the schedule fragnet becomes part of the project schedule and all future schedule updates upon approval by the Contracting Officer.

3.8.2 Changes That Do Not Cause Delay

If it is determined that a change does not constitute a schedule time extension, a fragnet as described in paragraph FRAGMENTARY NETWORK, is to be created and inserted into the Project schedule.

3.8.3 Time Impact Analysis (Prospective Analysis)

Submit requests for time extensions based on a prospective analysis if the work involved or the impact identified has not already occurred. Where the impact is ongoing a prospective analysis may be considered. However, the Government reserves the right to require a retrospective analysis be prepared after the impact has ended.

Prepare a time impact analysis for approval by the Contracting Officer based on industry recommended practice AACE 52R-06. Utilize a copy of the last approved schedule prior to the first day of the impact or delay for the time impact analysis. If Contracting Officer determines the time frame between the last approved schedule and the first day of impact is too great, prepare an interim updated schedule to perform the time impact analysis. Unless approved by the Contracting Officer, no other changes may be incorporated into the schedule being used to justify the time impact.

3.8.4 Forensic Schedule Analysis (Retrospective Analysis)

Submit requests for time extensions based on a retrospective analysis if the work involved or the impact identified has already occurred. The analysis must account for the actual performance of both the impacted work and all other contract work in the schedule.

If a methodology is chosen from AACE 29R-03, the method must adhere to the principles identified in ASCE 67-17. If there is a conflict with the methodology chosen from AACE 29R-03 and ASCE 67-17, ASCE 67-17 will govern. Choice of methodology should be discussed prior to submission to Government.

3.8.5 Fragmentary Network (Fragnet)

Prepare a proposed fragnet for time impact analysis consisting of a sequence of new activities that are proposed to be added to the project schedule to demonstrate the influence of the delay or impact to the project's contractual dates. Clearly show how the proposed fragnet is to be tied into the project schedule including all predecessors and successors to the fragnet activities. The proposed fragnet must be approved by the Contracting Officer prior to incorporation into the project schedule.

3.8.6 Time Extension

The Contracting Officer must approve the Justification of Delay including the time impact analysis before a time extension will be granted. No time extension will be granted unless the delay consumes all available Project Float and extends the projected finish date ("End Project" milestone) beyond the Contract Completion Date. The time extension will be in calendar days.

Actual delays that are found to be caused by the Contractor's own actions, which result in a calculated schedule delay, are not a cause for an extension to the performance period, completion date, or any interim milestone date.

3.8.7 Impact to Early Completion Schedule

No extended overhead will be paid for delay prior to the original Contract

Completion Date for an Early Completion IPS unless the Contractor actually performed work in accordance with that Early Completion Schedule. The Contractor must show that an early completion was achievable had it not been for the impact.

3.9 FAILURE TO ACHIEVE PROGRESS

Should the progress fall behind the approved project schedule for reasons other than those that are excusable within the terms of the contract, the Contracting Officer may require provision of a written recovery plan for approval. The plan must detail how progress will be made-up to include which activities will be accelerated by adding additional crews, longer work hours, extra workdays, etc.

3.9.1 Artificially Improving Progress

Artificially improving progress by means such as, but not limited to, revising the schedule logic, modifying, or adding constraints, shortening activity durations, or changing calendars in the project schedule is prohibited. Indicate assumptions made and the basis for any logic, constraint, duration, and calendar changes used in the creation of the recovery plan. Any additional resources, manpower, or daily and weekly work hour changes proposed in the recovery plan must be evident at the work site and documented in the daily report along with the Schedule Narrative Report.

3.9.2 Failure to Perform

Failure to perform work and maintain progress in accordance with the supplemental recovery plan may result in an interim and final unsatisfactory performance rating and may result in corrective action directed by the Contracting Officer pursuant to FAR 52.236-15 Schedules for Construction Contracts, FAR 52.249-10 Default (Fixed-Price Construction), and other contract provisions.

3.9.3 Recovery Schedule

Should the Contracting Officer find it necessary, submit a recovery schedule pursuant to FAR 52.236-15 Schedules for Construction Contracts.

3.10 OWNERSHIP OF FLOAT

Except for the provision given in the paragraph IMPACT TO EARLY COMPLETION SCHEDULE, float available in the schedule, at any time, belongs to the Project and is available for Contractor and Government use. This includes activity and project float. Activity float is the number of workdays that an activity can be delayed without causing a delay to the "End Project" finish milestone. Project float (if applicable) is the number of work days between the projected early finish and the "End Project" finish.

3.11 TRANSFER OF SCHEDULE DATA INTO RESIDENT MANAGEMENT SYSTEM

Ensure schedule data is uploaded to RMS. This data is additional supporting data in a form and detail required by the Contracting Officer pursuant to FAR 52.232-5 Payments under Fixed-Price Construction Contracts. The receipt of a proper payment request pursuant to FAR 52.232-27 Prompt Payment for Construction Contracts is contingent upon the Government receiving both acceptable and approvable hard copies and matching electronic versions of the application for progress payment.

3.12 PRIMAVERA P6 MANDATORY REQUIREMENTS

Ensure Primavera P6 settings provide a schedule capable of fulfilling the requirements of the contract. The following settings are mandatory and required in all schedule submissions to the Government:

a. Activity Codes must be Project Level, not Global or EPS level.

b. Calendars must be Project Level, not Global or Resource level.

c. Activity Duration Types must be set to "Fixed Duration & Units".

d. Percent Complete Types must be set to "Physical".

e. Time Period Admin Preferences must remain the default "8.0 hr/day, 40 hr/week, 172 hr/month, 2000 hr/year". Set Calendar Work Hours/Day to 8.0 Hour days.

f. Set Schedule Option for defining Critical Activities to "Longest Path".

g. Set Schedule Option for defining progressed activities to "Retained Logic".

h. Set up cost loading using a single lump sum non-labor resource. The Price/Unit must be $1/hr, Default Units/Time must be "8h/d", and settings "Auto Compute Actuals" and "Calculate costs from units" un-selected.

i. Activity ID's must not exceed 10 characters.

j. Activity Names must have a verb-noun structure and contain the most defining and detailed description within the first 30 characters.

k. The daily ending hour for all work calendars must be the same.

-- End of Section --

This page was intentionally left blank for duplex printing.

SECTION TABLE OF CONTENTS

DIVISION 01 - GENERAL REQUIREMENTS

SECTION 01 33 00

SUBMITTAL PROCEDURES

PART 1 GENERAL

1.1 SUMMARY
1.1.1 Submittal Information
1.1.2 Project Type
1.1.3 Submission of Submittals
1.2 DEFINITIONS
1.2.1 Submittal Descriptions (SD)
1.2.2 Approving Authority
1.2.3 Work
1.3 SUBMITTALS
1.3.1 Action Codes
1.3.1.1 Contractor Action Codes
1.3.2 Government Reviewer Designations
1.4 SUBMITTAL CLASSIFICATION
1.4.1 Government Approved (G)
1.4.2 For Information Only
1.5 PREPARATION
1.5.1 Transmittal Form
1.5.2 Submittal Format
1.5.2.1 Format of SD-01 Preconstruction Submittals
1.5.2.2 Format for SD-02 Shop Drawings
1.5.2.2.1 Drawing Identification
1.5.2.3 Format of SD-03 Product Data
1.5.2.3.1 Product Information
1.5.2.3.2 Standards
1.5.2.3.3 Data Submission
1.5.2.4 Format of SD-04 Samples
1.5.2.4.1 Sample Characteristics
1.5.2.4.2 Sample Incorporation
1.5.2.4.3 Comparison Sample
1.5.2.5 Format of SD-05 Design Data
1.5.2.6 Format of SD-06 Test Reports
1.5.2.7 Format of SD-07 Certificates
1.5.2.8 Format of SD-08 Manufacturer's Instructions
1.5.2.8.1 Standards
1.5.2.9 Format of SD-09 Manufacturer's Field Reports
1.5.2.10 Format of SD-11 Closeout Submittals
1.5.3 Source Drawings for Shop Drawings
1.5.3.1 Source Drawings
1.5.3.2 Terms and Conditions
1.5.4 Electronic File Format
1.6 QUANTITY OF SUBMITTALS
1.6.1 Number of SD-04 Samples
1.7 INFORMATION ONLY SUBMITTALS
1.8 PROJECT SUBMITTAL REGISTER

1.8.1 Submittal Management
1.8.2 Preconstruction Use of Submittal Register
1.8.3 Contractor Use of Submittal Register
1.8.4 Approving Authority Use of Submittal Register
1.8.5 Action Codes
1.8.6 Delivery of Copies
1.9 VARIATIONS
1.9.1 Considering Variations
1.9.2 Proposing Variations
1.9.3 Warranting that Variations are Compatible
1.9.4 Review Schedule Extension
1.10 SCHEDULING
1.11 GOVERNMENT APPROVING AUTHORITY
1.11.1 Review Notations
1.12 DISAPPROVED SUBMITTALS
1.13 APPROVED SUBMITTALS
1.14 APPROVED SAMPLES
1.15 WITHHOLDING OF PAYMENT
1.16 CERTIFICATION OF SUBMITTAL DATA

PART 2 PRODUCTS

PART 3 EXECUTION

ATTACHMENTS:

ENG Form 4025

Project Submittal Register

-- End of Section Table of Contents --

SECTION 01 33 00

SUBMITTAL PROCEDURES

PART 1 GENERAL

Attachments: Submittal Register

1.1 SUMMARY

1.1.1 Submittal Information

The Contractor is responsible for total management of their work including, but not limited to, approval, scheduling, control, certification of all submittals and compliance with all applicable Buy-American and Trade Agreement clauses. The submittal management system provided in these specifications is intended to be a complete system for the Contractor to use to control the quality of materials, equipment and workmanship provided by manufacturers, fabricators, suppliers and subcontractors. Review each submittal for contract compliance. **Compliance with all applicable Buy American and Trade Agreement Clauses is to be included in this review. The Contractor must provide the country of origin on ENG Form 4025 for each item submitted.** The Submittal Register (ENG Form 4288) will be utilized to log and monitor all submittal activities.

The Contracting Officer may request submittals, in addition to those specified, when deemed necessary to adequately describe the work covered in the respective sections. Each submittal is to be complete and in sufficient detail to allow ready determination of compliance with contract requirements.

Units of weights and measures used on all submittals are to be the same as those used in the contract drawings.

1.1.2 Project Type

The Contractor's Quality Control (CQC) System Manager is to check and approve all items before submittal and stamp, sign, and date indicating action taken. Clearly identify proposed deviations from the contract requirements. Include within submittals items such as: Contractor's, manufacturer's, or fabricator's drawings; descriptive literature including (but not limited to) catalog cuts, diagrams, operating charts or curves; test reports; test cylinders; samples; O&M manuals (including parts list); certifications; warranties; and other such required items.

1.1.3 Submission of Submittals

Schedule and provide submittals requiring Government approval, after notice to proceed (NTP). Provide ample lead time to ensure the submittal's processing by the Government and any lead time needed by the manufacturer upon ordering after approval. Dispose of samples not incorporated into the work in accordance with manufacturer's Safety Data Sheets (SDS) and in compliance with existing laws and regulations.

1.2 DEFINITIONS

1.2.1 Submittal Descriptions (SD)

Submittal requirements are specified in the technical sections. Examples and descriptions of submittals identified by the Submittal Description (SD) numbers and titles follow:

SD-01 Preconstruction Submittals

Submittals that are required prior to or at the start of construction (work) or the next major phase of the construction on a multiphase contract.

Preconstruction Submittals include schedules and a tabular list of locations, features, and other pertinent information regarding products, materials, equipment, or components to be used in the work.

The Government reserves the right to handle pre-construction submittals (listed below) as administrative submittals via a Serial Letter, as directed by the Project, Area or Resident Office. When directed by the Project, Area or Resident Office (as directed), submit administrative submittals for acceptance by the Government. Format for the Serial Letter will be as directed by the Project, Area or Resident Office.

Certificates Of Insurance

Surety Bonds

List Of Proposed Subcontractors

List Of Proposed Products

Baseline Network Analysis Schedule (NAS)

Submittal Register

Schedule Of Prices Or Earned Value Report

Accident Prevention Plan

Work Plan

Quality Control (QC) plan

Permits

Environmental Protection Plan

SD-02 Shop Drawings

Drawings, diagrams and schedules specifically prepared to illustrate some portion of the work.

Diagrams and instructions from a manufacturer or fabricator for use in producing the product and as aids to the Contractor for integrating the product or system into the project.

Drawings prepared by or for the Contractor to show how multiple systems and interdisciplinary work will be coordinated.

SD-03 Product Data

Catalog cuts, illustrations, schedules, diagrams, performance charts, instructions and brochures illustrating size, physical appearance and other characteristics of materials, systems or equipment for some portion of the work.

Samples of warranty language when the contract requires extended product warranties.

SD-04 Samples

Fabricated or unfabricated physical examples of materials, equipment or workmanship that illustrate functional and aesthetic characteristics of a material or product and establish standards by which the work can be judged.

Color samples from the manufacturer's standard line (or custom color samples if specified) to be used in selecting or approving colors for the project.

Field samples and mock-ups constructed on the project site establish standards ensuring work can be judged. Includes assemblies or portions of assemblies that are to be incorporated into the project and those that will be removed at conclusion of the work.

SD-06 Test Reports

Report signed by authorized official of testing laboratory that a material, product or system identical to the material, product or system to be provided has been tested in accord with specified requirements. Unless specified in another section, testing must have been within three years of date of contract award for the project.

Report that includes findings of a test required to be performed on an actual portion of the work or prototype prepared for the project before shipment to job site.

Report that includes finding of a test made at the job site or on sample taken from the job site, on portion of work during or after installation.

Investigation reports

Daily logs and checklists

Final acceptance test and operational test procedure

SD-07 Certificates

Statements printed on the manufacturer's letterhead and signed by responsible officials of manufacturer of product, system or material attesting that the product, system, or material meets specification requirements. Must be dated after award of project contract and clearly name the project.

Document required of Contractor, or of a manufacturer, supplier, installer or Subcontractor through Contractor. The document purpose is to further promote the orderly progression of a portion of the work by documenting procedures, acceptability of methods, or personnel qualifications.

Confined space entry permits

Text of posted operating instructions

SD-11 Closeout Submittals

Documentation to record compliance with technical or administrative requirements or to establish an administrative mechanism.

Submittals required for Guiding Principle Validation (GPV) or Third Party Certification (TPC).

Special requirements necessary to properly close out a construction contract. For example, Record Drawings and as-built drawings. Also, submittal requirements necessary to properly close out a major phase of construction on a multi-phase contract.

1.2.2 Approving Authority

Office or designated person authorized to approve the submittal.

1.2.3 Work

As used in this section, on-site and off-site construction required by contract documents, including labor necessary to produce submittals, construction, materials, products, equipment, and systems incorporated or to be incorporated in such construction. In exception, excludes work to produce SD-01 submittals.

1.3 SUBMITTALS

Government approval is required for submittals with a "G" designation; submittals not having any designation are for information only. When used, a designation following the "G" designation identifies the office that will review the submittal for the Government. Submit the following in accordance with this section. When directed by the Government, the submittal register may be submitted via Section of 01 45 00.15 10 RESIDENTIAL MANAGMENT SYSTEM CONTRACTOR MODE (RMS-CM) in lieu of the copy attached to this section. SpecsIntact is the software system used by Government to generate the Submittal Register that is loaded into RMS-CM.

SD-01 Preconstruction Submittals

Submittal Register; G-AO

1.3.1 Action Codes

1.3.1.1 Contractor Action Codes

DESIGN BID BUILD SUBMITTALS			
Submittal Classifications shown in UFGS Sections	Submittal Classification	Corresponding SpecsIntact (SI) Submittal Register Code which is populated in the SI Submittal Register. Software Limitations: (The software shows one character delineation in the SpecsIntact Submittal Register)	RMS – The following Submittal Classifications are populated in RMS when the SpecsIntact Submittal Data File is pulled into RMS)
G	Submittal requires Government Approval	G	GA
BLANK	Submittal is For Information Only (FIO)	BLANK	FIO

1.3.2 Government Reviewer Designations

Following the Submittal Classification designation "G", the following reviewer designations may be included:

RO - Resident Office
AO - Area Office
DO - District Office

Additional information will be provided at the pre-design and/or pre-construction conference.

Corps of Engineers, Omaha District Office for "DO" reviewer designations, submittals will be coordinated through RMS.

1.4 SUBMITTAL CLASSIFICATION

1.4.1 Government Approved (G)

Government approval is required for extensions of design, critical materials, variations, equipment whose compatibility with the entire system must be checked, and other items as designated by the Government.

Within the terms of the Contract Clause SPECIFICATIONS AND DRAWINGS FOR

CONSTRUCTION, submittals are considered to be "shop drawings."

1.4.2 For Information Only

Submittals not requiring Government approval will be for information only. Within the terms of the Contract Clause SPECIFICATIONS AND DRAWINGS FOR CONSTRUCTION, they are not considered to be "shop drawings."

1.5 PREPARATION

1.5.1 Transmittal Form

Use the ENG Form 4025 transmittal form for submitting both Government-approved and information-only submittals. Submit in accordance with the instructions on the reverse side of the form. These forms are included in the RMS CM software that the Contractor is required to use for this contract. Properly complete this form by filling out all the heading blank spaces and identifying each item submitted. If there are multiple Item numbers listed on a particular ENG Form 4025 submittal, combine all submitted items for review into a single Adobe file with bookmarks (for ease of review). Exercise special care to ensure proper listing of the specification paragraph and sheet number of the contract drawings pertinent to the data submitted for each item.

1.5.2 Submittal Format

1.5.2.1 Format of SD-01 Preconstruction Submittals

When the submittal includes a document that is to be used in the project, or is to become part of the project record, other than as a submittal, do not apply the Contractor's approval stamp to the document itself, but to a separate sheet accompanying the document.

Provide data in the unit of measure used in the contract documents.

1.5.2.2 Format for SD-02 Shop Drawings

Provide shop drawings not less than 8 1/2 by 11 inches nor more than 30 by 42 inches, except for full-size patterns or templates. Prepare drawings to accurate size, with scale indicated, unless another form is required. Ensure drawings are suitable for reproduction and of a quality to produce clear, distinct lines and letters, with dark lines on a white background.

a. Include the nameplate data, size, and capacity on drawings. Also include applicable federal, military, industry, and technical society publication references.

b. Dimension drawings, except diagrams and schematic drawings. Prepare drawings demonstrating interface with other trades to scale. Use the same unit of measure for shop drawings as indicated on the contract drawings. Identify materials and products for work shown.

Submit an electronic copy of drawings in PDF format.

1.5.2.2.1 Drawing Identification

Include on each drawing the drawing title, number, date, and revision numbers and dates.

Number drawings in a logical sequence. Each drawing is to bear the number of the submittal in a uniform location next to the title block. Place the Government contract number in the margin, immediately below the title block, for each drawing.

1.5.2.3 Format of SD-03 Product Data

Present product data submittals for each section. Include a table of contents, listing the page and catalog item numbers for product data.

Indicate, by prominent notation, each product that is being submitted; indicate the specification section number and paragraph number to which it pertains.

1.5.2.3.1 Product Information

Supplement product data with material prepared for the project to satisfy the submittal requirements where product data does not exist. Identify this material as developed specifically for the project, with information and format as required for submission of SD-07 Certificates.

Provide product data in units used in the Contract documents. Where product data are included in preprinted catalogs with another unit, submit the dimensions in contract document units, on a separate sheet.

1.5.2.3.2 Standards

Where equipment or materials are specified to conform to industry or technical-society reference standards of such organizations as the American National Standards Institute (ANSI), American Society for Testing and Materials International (ASTM), National Electrical Manufacturer's Association (NEMA), Underwriters Laboratories (UL), or Association of Edison Illuminating Companies (AEIC), submit proof of such compliance. The label or listing by the specified organization will be acceptable evidence of compliance. In lieu of the label or listing, submit a certificate from an independent testing organization, competent to perform testing, and approved by the Contracting Officer. State on the certificate that the item has been tested in accordance with the specified organization's test methods and that the item complies with the specified organization's reference standard.

1.5.2.3.3 Data Submission

Collect required data submittals for each specific material, product, unit of work, or system into a single submittal that is marked for choices, options, and portions applicable to the submittal. Mark each copy of the product data identically. Partial submittals will not be accepted for expedition of the construction effort.

Submit the manufacturer's instructions before installation.

1.5.2.4 Format of SD-04 Samples

1.5.2.4.1 Sample Characteristics

Furnish samples in the following sizes, unless otherwise specified or unless the manufacturer has prepackaged samples of approximately the same size as specified:

a. Sample of Equipment or Device: Full size.

b. Sample of Materials Less Than 2 by 3 inches: Built up to 8 1/2 by 11 inches.

c. Sample of Materials Exceeding 8 1/2 by 11 inches: Cut down to 8 1/2 by 11 inches and adequate to indicate color, texture, and material variations.

d. Sample of Linear Devices or Materials: 10 inch length or length to be supplied, if less than 10 inches. Examples of linear devices or materials are conduit and handrails.

e. Sample Volume of Nonsolid Materials: Pint. Examples of nonsolid materials are sand and paint.

f. Color Selection Samples: 2 by 4 inches. Where samples are specified for selection of color, finish, pattern, or texture, submit the full set of available choices for the material or product specified. Sizes and quantities of samples are to represent their respective standard unit.

g. Sample Panel: 4 by 4 feet.

h. Sample Installation: 100 square feet.

1.5.2.4.2 Sample Incorporation

Reusable Samples: Incorporate returned samples into work only if so specified or indicated. Incorporated samples are to be in undamaged condition at the time of use.

Recording of Sample Installation: Note and preserve the notation of any area constituting a sample installation, but remove the notation at the final clean-up of the project.

1.5.2.4.3 Comparison Sample

Samples Showing Range of Variation: Where variations in color, finish, pattern, or texture are unavoidable due to nature of the materials, submit sets of samples of not less than three units showing extremes and middle of range. Mark each unit to describe its relation to the range of the variation.

When color, texture, or pattern is specified by naming a particular manufacturer and style, include one sample of that manufacturer and style, for comparison.

1.5.2.5 Format of SD-05 Design Data

Provide design data and certificates on 8 1/2 by 11 inch page size.

1.5.2.6 Format of SD-06 Test Reports

By prominent notation, indicate each report in the submittal. Indicate the specification number and paragraph number to which each report pertains.

1.5.2.7 Format of SD-07 Certificates

Provide design data and certificates on 8 1/2 by 11 inch page size.

1.5.2.8 Format of SD-08 Manufacturer's Instructions

Present manufacturer's instructions submittals for each section. Include the manufacturer's name, trade name, place of manufacture, and catalog model or number on product data. Also include applicable federal, military, industry, and technical-society publication references. If supplemental information is needed to clarify the manufacturer's data, submit it as specified for SD-07 Certificates.

Submit the manufacturer's instructions before installation.

1.5.2.8.1 Standards

Where equipment or materials are specified to conform to industry or technical-society reference standards of such organizations as the American National Standards Institute (ANSI), ASTM International (ASTM), National Electrical Manufacturer's Association (NEMA), Underwriters Laboratories (UL), or Association of Edison Illuminating Companies (AEIC), submit proof of such compliance. The label or listing by the specified organization will be acceptable evidence of compliance. In lieu of the label or listing, submit a certificate from an independent testing organization, competent to perform testing, and approved by the Contracting Officer. State on the certificate that the item has been tested in accordance with the specified organization's test methods and that the item complies with the specified organization's reference standard.

1.5.2.9 Format of SD-09 Manufacturer's Field Reports

By prominent notation, indicate each report in the submittal. Indicate the specification number and paragraph number to which each report pertains.

1.5.2.10 Format of SD-11 Closeout Submittals

When the submittal includes a document that is to be used in the project or is to become part of the project record, other than as a submittal, do not apply the Contractor's approval stamp to the document itself, but to a separate sheet accompanying the document.

Provide data in the unit of measure used in the contract documents.

1.5.3 Source Drawings for Shop Drawings

1.5.3.1 Source Drawings

The entire set of source drawing files (DWG or DGN) will not be provided to the Contractor. Request the specific Drawing Number for the preparation of shop drawings. Only those drawings requested to prepare shop drawings will be provided. These drawings are provided only after award.

1.5.3.2 Terms and Conditions

Data contained on these electronic files must not be used for any purpose

other than as a convenience in the preparation of construction data for the referenced project. Any other use or reuse is at the sole risk of the Contractor and without liability or legal exposure to the Government. The Contractor must make no claim, and waives to the fullest extent permitted by law any claim or cause of action of any nature against the Government, its agents, or its subconsultants that may arise out of or in connection with the use of these electronic files. The Contractor must, to the fullest extent permitted by law, indemnify and hold the Government harmless against all damages, liabilities, or costs, including reasonable attorney's fees and defense costs, arising out of or resulting from the use of these electronic files.

These electronic source drawing files are not construction documents. Differences may exist between the source drawing files and the corresponding construction documents. The Government makes no representation regarding the accuracy or completeness of the electronic source drawing files, nor does it make representation to the compatibility of these files with the Contractor hardware or software. The Contractor is responsible for determining if any conflict exists. In the event that a conflict arises between the signed and sealed construction documents prepared by the Government and the furnished source drawing files, the signed and sealed construction documents govern. Use of these source drawing files does not relieve the Contractor of the duty to fully comply with the contract documents, including and without limitation the need to check, confirm and coordinate the work of all contractors for the project. If the Contractor uses, duplicates or modifies these electronic source drawing files for use in producing construction data related to this contract, remove all previous indication of ownership (seals, logos, signatures, initials and dates).

1.5.4 Electronic File Format

Provide submittals in electronic format, with the exception of material samples required for SD-04 Samples items. Compile the submittal file as a single, complete document, to include the Transmittal Form described within. Name the electronic submittal file specifically according to its contents, and coordinate the file naming convention with the Contracting Officer. Electronic files must be of sufficient quality that all information is legible. Use PDF as the electronic format, unless otherwise specified or directed by the Contracting Officer. All documents must make use of optical character recognition (OCR) routines to make text searchable and selectable, so that the text can be copied. Index and bookmark files exceeding 30 pages to allow efficient navigation of the file. When required, the electronic file must include a valid electronic signature.

E-mail electronic submittal documents smaller than 10MB to an e-mail address as directed by the Contracting Officer, unless directed otherwise by COR. Provide electronic documents over 10 MB on an optical disc or through an electronic file sharing system, such as secure ftp site or DoD SAFE located at the following website: https://safe.apps.mil/. Use of the Government web application must be initiated by the Government, unless Contractor has a Government Common Access Card (CAC). This Government web application restricts the number of days files are available to download.

1.6 QUANTITY OF SUBMITTALS

Submittals are to be transmitted electronically, unless directed otherwise.

1.6.1 Number of SD-04 Samples

a. Submit two samples, or two sets of samples showing the range of variation, of each required item. One approved sample or set of samples will be retained by the approving authority and one will be returned to the Contractor.

b. Submit one sample panel or provide one sample installation where directed. Include components listed in the technical section or as directed.

c. Submit one sample installation, where directed.

d. Submit one sample of nonsolid materials.

1.7 INFORMATION ONLY SUBMITTALS

Submittals without an action code must be certified by the QC manager and submitted to the Contracting Officer for information-only. Approval of the Contracting Officer is not required on information only submittals. The Contracting Officer will mark "receipt acknowledged" on submittals for information and will return only the transmittal cover sheet to the Contractor. Normally, submittals for information only will not be returned. However, the Government reserves the right to return unsatisfactory submittals and require the Contractor to resubmit any item found not to comply with the contract. This does not relieve the Contractor from the obligation to furnish material conforming to the plans and specifications; will not prevent the Contracting Officer from requiring removal and replacement of nonconforming material incorporated in the work; and does not relieve the Contractor of the requirement to furnish samples for testing by the Government laboratory or for check testing by the Government in those instances where the technical specifications so prescribe.

1.8 PROJECT SUBMITTAL REGISTER

A sample Project Submittal Register showing submittals required by the specifications is attached to this section as "Project Submittal Register."

1.8.1 Submittal Management

Prepare and maintain a submittal register, as the work progresses. Do not change data that is output in columns (c), (d), (e), and (f) as delivered by Government; retain data that is output in columns (a), (g), (h), and (i) as approved. As an attachment, provide a submittal register showing items of equipment and materials for which submittals are required by the specifications. This list may not be all-inclusive and additional submittals may be required. Maintain a submittal register for the project in accordance with Section 01 45 00.15 10 RESIDENT MANAGEMENT SYSTEM CONTRACTOR MODE(RMS CM). The Government will provide the initial submittal register in electronic format with the following fields completed, to the extent that will be required by the Government during subsequent usage.

Column (c): Lists specification section in which submittal is required.

Column (d): Lists each submittal description (SD Number. and type, e.g., SD-02 Shop Drawings) required in each specification

section.

Column (e): Lists one principal paragraph in each specification section where a material or product is specified. This listing is only to facilitate locating submitted requirements. Do not consider entries in column (e) as limiting the project requirements.

Thereafter, the Contractor is to track all submittals by maintaining a complete list, including completion of all data columns and all dates on which submittals are received by and returned by the Government.

1.8.2 Preconstruction Use of Submittal Register

Submit the submittal register as an electronic database, using the submittal management program furnished to Contractor, unless directed otherwise by COR. Include the QC plan and the project schedule. Verify that all submittals required for the project are listed and add missing submittals. Coordinate and complete the following fields on the register database submitted with the QC plan and the project schedule:

Column (a) Activity Number: Activity number from the project schedule.

Column (g) Contractor Submit Date: Scheduled date for the approving authority to receive submittals.

Column (h) Contractor Approval Date: Date that Contractor needs approval of submittal.

Column (i) Contractor Material: Date that Contractor needs material delivered to Contractor control.

1.8.3 Contractor Use of Submittal Register

Update the following fields in the Government-furnished submittal register program or equivalent fields in the program used by the Contractor with each submittal throughout the contract.

Column (b) Transmittal Number: List of consecutive, Contractor-assigned numbers.

Column (j) Action Code (k): Date of action used to record Contractor's review when forwarding submittals to QC.

Column (l) Date submittal transmitted.

Column (q) Date approval was received.

1.8.4 Approving Authority Use of Submittal Register

Update the following fields:

Column (b) Transmittal Number: List of consecutive, Contractor-assigned numbers.

Column (l) Date submittal was received.

Column (m) through (p) Dates of review actions.

Column (q) Date of return to Contractor.

1.8.5 Action Codes

See paragraph Action Codes above.

1.8.6 Delivery of Copies

Submit an updated electronic copy of the submittal register to the Contracting Officer with each invoice request, unless a paper copy is requested by the Contracting Officer. Provide an updated Submittal Register monthly regardless of whether an invoice is submitted.

1.9 VARIATIONS

Variations from contract requirements require Contracting Officer approval pursuant to contract Clause FAR 52.236-21 Specifications and Drawings for Construction, and will be considered where advantageous to the Government.

1.9.1 Considering Variations

Discussion of variations with the Contracting Officer before submission will help ensure that functional and quality requirements are met and minimize rejections and resubmittals. For variations that include design changes or some material or product substitutions, the Government may require an evaluation and analysis by a licensed professional engineer hired by the contractor. When contemplating a variation that results in lower cost, consider submission of the variation as a Value Engineering Change Proposal (VECP).

Specifically point out variations from contract requirements in transmittal letters. Failure to point out variations may cause the Government to require rejection and removal of such work at no additional cost to the Government.

1.9.2 Proposing Variations

When proposing variations, deliver a written request to the Contracting Officer, with documentation of the nature and features of the variation and why the variation is desirable and beneficial to Government. If lower cost is a benefit, also include an estimate of the cost savings. In addition to documentation required for variation, include the submittals required for the item. Clearly mark the proposed variation in all documentation.

Check the column "variation" of ENG Form 4025 for submittals that include variations proposed by the Contractor. Set forth in writing the reason for any variations and note such variations on the submittal. The Government reserves the right to rescind inadvertent approval of submittals containing unnoted variations.

1.9.3 Warranting that Variations are Compatible

When delivering a variation for approval, the Contractor warrants that this contract has been reviewed to establish that the variation, if incorporated, will be compatible with other elements of work.

1.9.4 Review Schedule Extension

In addition to the normal submittal review period, a period of 14 calendar days will be allowed for the Government to consider submittals with variations.

1.10 SCHEDULING

Schedule and submit concurrently product data and shop drawings covering component items forming a system or items that are interrelated. Submit pertinent certifications at the same time. No delay damages or time extensions will be allowed for time lost in late submittals. .

a. Coordinate scheduling, sequencing, preparing, and processing of submittals with performance of work so that work will not be delayed by submittal processing. The Contractor is responsible for additional time required for Government reviews resulting from required resubmittals. The review period for each resubmittal is the same as for the initial submittal.

b. Submittals required by the contract documents are listed on the submittal register. If a submittal is listed in the submittal register but does not pertain to the contract work, the Contractor is to include the submittal in the register and annotate it "N/A" with a brief explanation. Approval by the Contracting Officer does not relieve the Contractor of supplying submittals required by the contract documents but that have been omitted from the register or marked "N/A."

c. Resubmit the submittal register and annotate it monthly with actual submission and approval dates. When all items on the register have been fully approved, no further resubmittal is required.

Contracting Officer review will be completed within 20 calendar days after the date of submission.

The Government review period for each construction submittal does not begin until the submittal is delivered via RMS CM. Contract compliance for all submittals are the Contractor's responsibility. Government acceptance or receipt acknowledged does not remove this responsibility for contract compliance on any construction submittal.

1.11 GOVERNMENT APPROVING AUTHORITY

When the approving authority is the Contracting Officer, the Government will:

a. Note the date on which the submittal was received.

b. Review submittals for approval within the scheduling period specified and only for conformance with project design concepts and compliance with contract documents.

c. Identify returned submittals with one of the actions defined in paragraph REVIEW NOTATIONS and with comments and markings appropriate for the action indicated.

Upon completion of review of submittals requiring Government approval, stamp and date submittals. An electronic copy of the submittal will be

retained by the Contracting Officer and an electronic copy of the submittal will be returned to the Contractor. The Government may process submittals in the RMS CM System.

1.11.1 Review Notations

Submittals will be returned to the Contractor with the following notations:

a. Submittals marked "approved" or "accepted" authorize proceeding with the work covered.

b. Submittals marked "approved as noted" or "approved, except as noted, resubmittal not required," authorize proceeding with the work covered provided that the Contractor takes no exception to the corrections.

c. Submittals marked "not approved," "disapproved," or "revise and resubmit" indicate incomplete submittal or noncompliance with the contract requirements or design concept. Resubmit with appropriate changes. Do not proceed with work for this item until the resubmittal is approved.

d. Submittals marked "not reviewed" indicate that the submittal has been previously reviewed and approved, is not required, does not have evidence of being reviewed and approved by Contractor, or is not complete. A submittal marked "not reviewed" will be returned with an explanation of the reason it is not reviewed. Resubmit submittals returned for lack of review by Contractor or for being incomplete, with appropriate action, coordination, or change.

e. Submittals marked "receipt acknowledged" indicate that submittals have been received by the Government. This applies only to "information-only submittals" as previously defined.

1.12 DISAPPROVED SUBMITTALS

Make corrections required by the Contracting Officer. If the Contractor considers any correction or notation on the returned submittals to constitute a change to the contract drawings or specifications, give notice to the Contracting Officer as required under the FAR clause titled CHANGES. The Contractor is responsible for the dimensions and design of connection details and the construction of work. Failure to point out variations may cause the Government to require rejection and removal of such work at the Contractor's expense.

If changes are necessary to submittals, make such revisions and resubmit in accordance with the procedures above. No item of work requiring a submittal change is to be accomplished until the changed submittals are approved.

1.13 APPROVED SUBMITTALS

The Contracting Officer's approval of submittals is not to be construed as a complete check, and indicates only that the general method of construction, materials, detailing, and other information are satisfactory.

Approval or acceptance by the Government for a submittal does not relieve the Contractor of the responsibility for meeting the contract requirements or for any error that may exist, because under the Quality Control (QC)

requirements of this contract, the Contractor is responsible for ensuring information contained within each submittal accurately conforms with the requirements of the contract documents.

After submittals have been approved or accepted by the Contracting Officer, no resubmittal for the purpose of substituting materials or equipment will be considered unless accompanied by an explanation of why a substitution is necessary.

1.14 APPROVED SAMPLES

Approval of a sample is only for the characteristics or use named in such approval and is not to be construed to change or modify any contract requirements. Before submitting samples, provide assurance that the materials or equipment will be available in quantities required in the project. No change or substitution will be permitted after a sample has been approved.

Match the approved samples for materials and equipment incorporated in the work. If requested, approved samples, including those that may be damaged in testing, will be returned to the Contractor, at its expense, upon completion of the contract. Unapproved samples will also be returned to the Contractor at its expense, if so requested.

Failure of any materials to pass the specified tests will be sufficient cause for refusal to consider, under this contract, any further samples of the same brand or make as that material. The Government reserves the right to disapprove any material or equipment that has previously proved unsatisfactory in service.

Samples of various materials or equipment delivered on the site or in place may be taken by the Contracting Officer for testing. Samples failing to meet contract requirements will automatically void previous approvals. Replace such materials or equipment to meet contract requirements.

1.15 WITHHOLDING OF PAYMENT

Payment for materials incorporated in the work will not be made if required approvals have not been obtained.

1.16 CERTIFICATION OF SUBMITTAL DATA

Certify the submittal data as follows on Form ENG 4025: "I certify that the above submitted items had been reviewed in detail and are correct and in strict conformance with the contract drawings and specifications except as otherwise stated.

_____NAME OF CONTRACTOR _____ SIGNATURE OF CONTRACTOR

PART 2 PRODUCTS

Not Used

PART 3 EXECUTION

Not Used

-- End of Section --

This page was intentionally left blank for duplex printing.

SUBMITTAL REGISTER

CONTRACT NO.

TITLE AND LOCATION
Oahe IDCC Road Maintenance 2026 - Oahe Dam, South Dakota

CONTRACTOR

ACTIVITY NO	TRANSMITTAL NO	SPEC SECT	DESCRIPTION ITEM SUBMITTED	PARAGRAPH #	CLASSIFICATION	GOVT OR A/E REVWR	CONTRACTOR: SCHEDULE DATES			CONTRACTOR ACTION		DATE FWD TO APPR AUTH/ DATE RCD FROM CONTR	APPROVING AUTHORITY				MAILED TO CONTR/ DATE RCD FRM APPR AUTH	REMARKS
							SUBMIT	APPROVAL NEEDED BY	MATERIAL NEEDED BY	ACTION CODE	DATE OF ACTION		DATE FWD TO OTHER REVIEWER	DATE RCD FROM OTH REVIEWER	ACTION CODE	DATE OF ACTION		
(a)	(b)	(c)	(d)	(e)	(f)		(g)	(h)	(i)	(j)	(k)	(l)	(m)	(n)	(o)	(p)	(q)	(r)
		01 12 00	SD-01 Preconstruction Submittals															
			Proposed Methods of Operation	1.9	G	AO												
			Construction Right-of-Way	1.2														
			State and Federal Highways	1.7.6														
			State and Local Public Roads	1.7.7														
			Temporary Traffic Control (TTC)	1.7.3	G	AO												
			SD-02 Shop Drawings															
			Care of Water	1.4	G	AO												
			SD-11 Closeout Submittals															
			Warranty of Construction	1.13														
			Final As-Built Drawings	1.16	G	AO												
		01 30 00.24	SD-01 Preconstruction Submittals															
			iWATCH and/or CorpsWatch	1.6														
			Training Sign-In Sheets															
			E-Verify	1.6														
			Contractor Computer	1.23.1.4	G	RO												
			Cybersecurity Compliance															
			Statements															
		01 32 01.00 10	SD-01 Preconstruction Submittals															
			Project Scheduler Qualifications	1.3	G	AO												
			Preliminary Project Schedule	3.4.1	G	AO												
			Initial Project Schedule	3.4.2	G	AO												
			Periodic Schedule Update	3.6.2	G	AO												
		01 33 00	SD-01 Preconstruction Submittals															
			Submittal Register	1.8	G	AO												
		01 35 26	SD-01 Preconstruction Submittals															

SUBMITTAL REGISTER

CONTRACT NO.

TITLE AND LOCATION
Oahe IDCC Road Maintenance 2026 - Oahe Dam, South Dakota

CONTRACTOR

ACTIVITY NO	TRANSMITTAL NO	SPEC SECT	DESCRIPTION ITEM SUBMITTED	PARAGRAPH #	CLASSIFICATION	GOVT OR A/E REVWR	CONTRACTOR: SCHEDULE DATES			CONTRACTOR ACTION			APPROVING AUTHORITY					
							SUBMIT	APPROVAL NEEDED BY	MATERIAL NEEDED BY	ACTION CODE	DATE OF ACTION	DATE FWD TO APPR AUTH/ DATE RCD FROM CONTR	DATE FWD TO OTHER REVIEWER	DATE RCD FROM OTH REVIEWER	ACTION CODE	DATE OF ACTION	MAILED TO CONTR/ DATE RCD FRM APPR AUTH	REMARKS
(a)	(b)	(c)	(d)	(e)	(f)		(g)	(h)	(i)	(j)	(k)	(l)	(m)	(n)	(o)	(p)	(q)	(r)
		01 35 26	Accident Prevention Plan (APP)	1.8.1	G	AO												
			SD-06 Test Reports															
			Accident Reports	1.12.2	G	AO												
			Monthly Exposure Reports	1.5	G	AO												
			SD-07 Certificates															
			Activity Hazard Analysis (AHA)	1.9	G	AO												
			Hot Work Permit	1.13														
		01 41 26.01 24	SD-01 Preconstruction Submittals															
			Notice of Intent	3.2.1														
			Authorization Letter	3.2.2														
			Storm Water Pollution Prevention	3.2.4	G	RO												
			Plan															
			Notice of Termination	3.2.7														
			SWPPP Preparer Training	3.2.4														
			Certification															
			SD-06 Test Reports															
			Reports	3.2.5														
		01 45 00	SD-01 Preconstruction Submittals															
			Contractor Quality Control (CQC)	1.5.2	G	AO												
			Plan															
			SD-06 Test Reports															
			Verification Statement	1.12.3														
		01 57 20.00 10	SD-01 Preconstruction Submittals															
			Environmental Protection Plan	1.8	G	AO												
		01 57 23	SD-07 Certificates															
			Mill Certificate or Affidavit	2.1.3														

SUBMITTAL REGISTER

CONTRACT NO.

TITLE AND LOCATION
Oahe IDCC Road Maintenance 2026 - Oahe Dam, South Dakota

CONTRACTOR

ACTIVITY NO	TRANSMITTAL NO	SPEC SECT	DESCRIPTION ITEM SUBMITTED	PARAGRAPH #	CLASSIFICATION	GOVT OR A/E REVWR	CONTRACTOR: SCHEDULE DATES			CONTRACTOR ACTION		DATE FWD TO APPR AUTH/ DATE RCD FROM CONTR	APPROVING AUTHORITY				MAILED TO CONTR/ DATE RCD FRM APPR AUTH	REMARKS
							SUBMIT	APPROVAL NEEDED BY	MATERIAL NEEDED BY	ACTION CODE	DATE OF ACTION		DATE FWD TO OTHER REVIEWER	DATE RCD FROM OTH REVIEWER	ACTION CODE	DATE OF ACTION		
(a)	(b)	(c)	(d)	(e)	(f)		(g)	(h)	(i)	(j)	(k)	(l)	(m)	(n)	(o)	(p)	(q)	(r)
		31 00 00	SD-03 Product Data															
			Rock Excavation	1.6.1.2	G													
			Opening of any Excavation or	3.4	G													
			Borrow Pit															
			Shoulder Construction	3.10	G													
			SD-06 Test Reports															
			Testing	3.13	G													
			SD-07 Certificates															
			Testing	3.13	G													
		31 05 19	SD-07 Certificates															
			Geotextile	2.1.1	G													
		32 01 17.16	SD-03 Product Data															
			Installation of Sealant	3.4	G													
			SD-04 Samples															
			Materials		G													
			SD-06 Test Reports															
			Test Requirements	1.4	G													
		32 11 23	SD-03 Product Data															
			Plant, Equipment, and Tools	2.1	G													
			Waybills and Delivery Tickets	1.1.4	G													
			SD-06 Test Reports															
			Sampling and Testing	1.5	G													
			Field Density Tests	1.5.2.4	G													
		32 12 16	SD-03 Product Data															
			Mix Design	2.4	G													
			Quality Control	3.9	G													

SUBMITTAL REGISTER

CONTRACT NO.

TITLE AND LOCATION
Oahe IDCC Road Maintenance 2026 - Oahe Dam, South Dakota

CONTRACTOR

ACTIVITY NO	TRANSMITTAL NO	SPEC SECT	DESCRIPTION ITEM SUBMITTED	PARAGRAPH #	CLASSIFICATION	GOVT OR A/E REVWR	CONTRACTOR: SCHEDULE DATES			CONTRACTOR ACTION			APPROVING AUTHORITY					
							SUBMIT	APPROVAL NEEDED BY	MATERIAL NEEDED BY	ACTION CODE	DATE OF ACTION	DATE FWD TO APPR AUTH/ DATE RCD FROM CONTR	DATE FWD TO OTHER REVIEWER	DATE RCD FROM OTH REVIEWER	ACTION CODE	DATE OF ACTION	MAILED TO CONTR/ DATE RCD FRM APPR AUTH	REMARKS
(a)	(b)	(c)	(d)	(e)	(f)		(g)	(h)	(i)	(j)	(k)	(l)	(m)	(n)	(o)	(p)	(q)	(r)
		32 12 16	Material Acceptance	3.10	G													
			SD-04 Samples															
			Asphalt Cement Binder	2.3	G													
			Aggregates	2.2	G													
			SD-06 Test Reports															
			Aggregates	2.2	G													
			QC Monitoring	3.9.2.9	G													
			SD-07 Certificates															
			Asphalt Cement Binder	2.3	G													
			Testing Laboratory	3.5	G													
		32 12 36.13	SD-03 Product Data															
			Waybills and Delivery Tickets	1.1.3	G													
			Equipment List	1.4	G													
			Inspection Reports	3.4.2	G													
			SD-04 Samples															
			Bituminous Materials	1.5.3	G													
			Aggregates	1.5.2	G													
			Fog Seal	2.3	G													
			SD-06 Test Reports															
			Tests	3.3.1														
		32 16 13	SD-03 Product Data															
			Concrete Mix Design		G													
			Concrete Admixtures		G													
			SD-06 Test Reports															
			Field Quality Control	3.8	G													
			Cylinder Compressive Strength		G													

SUBMITTAL REGISTER

CONTRACT NO.

TITLE AND LOCATION
Oahe IDCC Road Maintenance 2026 - Oahe Dam, South Dakota

CONTRACTOR

ACTIVITY NO	TRANSMITTAL NO	SPEC SECT	DESCRIPTION ITEM SUBMITTED	PARAGRAPH #	CLASSIFICATION	GOVT OR A/E REVWR	CONTRACTOR: SCHEDULE DATES			CONTRACTOR ACTION			APPROVING AUTHORITY					
							SUBMIT	APPROVAL NEEDED BY	MATERIAL NEEDED BY	ACTION CODE	DATE OF ACTION	DATE FWD TO APPR AUTH/ DATE RCD FROM CONTR	DATE FWD TO OTHER REVIEWER	DATE RCD FROM OTH REVIEWER	ACTION CODE	DATE OF ACTION	MAILED TO CONTR/ DATE RCD FRM APPR AUTH	REMARKS
(a)	(b)	(c)	(d)	(e)	(f)		(g)	(h)	(i)	(j)	(k)	(l)	(m)	(n)	(o)	(p)	(q)	(r)
		32 17 24.00 10	SD-03 Product Data															
			Equipment	1.3														
			Qualifications	1.5.1	G													
			SD-06 Test Reports															
			Sampling and Testing	2.3	G													
		32 92 19	SD-03 Product Data															
			Wood cellulose fiber mulch	2.4.3	G													
			Fertilizer	2.3	G													
			SD-07 Certificates															
			seed	2.1	G													
		33 40 00	SD-03 Product Data															
			Placing Pipe	3.3														
			SD-04 Samples															
			Pipe for Culverts and Storm	2.1	G													
			Drains															
			SD-07 Certificates															
			Determination of Density	3.5.5	G													

This page was intentionally left blank for duplex printing.

U.S. Army Corps of Engineers (USACE)

TRANSMITTAL OF SHOP DRAWINGS, EQUIPMENT DATA, MATERIAL SAMPLES, OR MANUFACTURER'S CERTIFICATES OF COMPLIANCE

For use of this form, see ER 415-1-10; the proponent agency is CECW-CE.

DATE	TRANSMITTAL NO.

SECTION I - REQUEST FOR APPROVAL OF THE FOLLOWING ITEMS (*This section will be initiated by the contractor*)

TO:	FROM:	CONTRACT NO.	CHECK ONE: ☐ THIS IS A NEW TRANSMITTAL ☐ THIS IS A RESUBMITTAL OF TRANSMITTAL _____

SPECIFICATION SEC. NO. (*Cover only one section with each transmittal*)	PROJECT TITLE AND LOCATION	THIS TRANSMITTAL IS FOR: (*Check one*) ☐ FIO ☐ GA ☐ DA ☐ CR ☐ DA/CR ☐ DA/GA

ITEM NO. (*See Note 3*)	**DESCRIPTION OF SUBMITTAL ITEM** (*Type size, model number/etc.*)	**SUBMITTAL TYPE CODE** (*See Note 8*)	**NO. OF COPIES**	**CONTRACT DOCUMENT REFERENCE**		**CONTRACTOR REVIEW CODE**	**VARIATION** Enter "Y" if requesting a variation (*See Note 6*)	**USACE ACTION CODE** (*Note 9*)
				SPEC. PARA. NO.	**DRAWING SHEET NO.**			
a.	**b.**	**c.**	**d.**	**e.**	**f.**	**g.**	**h.**	**i.**

REMARKS	I certify that the above submitted items had been reviewed in detail and are correct and in strict conformance with the contract drawings and specifications except as otherwise stated.	
	NAME OF CONTRACTOR	SIGNATURE OF CONTRACTOR

SECTION II - APPROVAL ACTION

ENCLOSURES RETURNED (*List by item No.*)	NAME AND TITLE OF APPROVING AUTHORITY	SIGNATURE OF APPROVING AUTHORITY	DATE

INSTRUCTIONS

1. Section I will be initiated by the Contractor in the required number of copies.

2. Each Transmittal shall be numbered consecutively. The Transmittal Number typically includes two parts separated by a dash (-). The first part is the specification section number. The second part is a sequential number for the submittals under that spec section. If the Transmittal is a resubmittal, then add a decimal point to the end of the original Transmittal Number and begin numbering the resubmittal packages sequentially after the decimal.

3. The "Item No." for each entry on this form will be the same "Item No." as indicated on ENG FORM 4288-R.

4. Submittals requiring expeditious handling will be submitted on a separate ENG Form 4025-R.

5. Items transmitted on each transmittal form will be from the same specification section. Do not combine submittal information from different specification sections in a single transmittal.

6. If the data submitted are intentionally in variance with the contract requirements, indicate a variation in column h, and enter a statement in the Remarks block describing he detailed reason for the variation.

7. ENG Form 4025-R is self-transmitting - a letter of transmittal is not required.

8. When submittal items are transmitted, indicate the "Submittal Type" (*SD-01 through SD-11*) in column c of Section I.
   Submittal types are the following:
   SD-01 - Preconstruction SD-02 - Shop Drawings SD-03 - Product Data SD-04 - Samples SD-05 - Design Data SD-06 - Test Reports
   SD-07 - Certificates SD-08 - Manufacturer's Instructions SD-09 - Manufacturer's Field Reports SD-10 - O&M Data SD-11 - Closeout

9. For each submittal item, the Contractor will assign Submittal Action Codes in column g of Section I. The U.S. Army Corps of Engineers approving authority will assign Submittal Action Codes in column i of Section I. The Submittal Action Codes are:

   A -- Approved as submitted.
   B -- Approved, except as noted on drawings. Resubmission not required.
   C -- Approved, except as noted on drawings. Refer to attached comments. Resubmission required.
   D -- Will be returned by separate correspondence.
   E -- Disapproved. Refer to attached comments.
   F -- Receipt acknowledged.
   X -- Receipt acknowledged, does not comply with contract requirements, as noted.
   G -- Other action required *(Specify)*
   K -- Government concurs with intermediate design. (*For D-B contracts*)
   R -- Design submittal is acceptable for release for construction. (*For D-B contracts*)

10. Approval of items does not relieve the contractor from complying with all the requirements of the contract.

SECTION TABLE OF CONTENTS

DIVISION 01 - GENERAL REQUIREMENTS

SECTION 01 35 26

GOVERNMENTAL SAFETY REQUIREMENTS

PART 1 GENERAL

1.1 REFERENCES
1.2 DEFINITIONS
1.2.1 Site Safety and Health Officer (SSHO)
1.2.1.1 Level One SSHO
1.2.1.2 Level Two SSHO
1.2.1.3 Level Three SSHO
1.2.1.4 Alternate SSHO
1.2.2 Competent Person (CP)
1.2.3 Qualified Person (QP)
1.3 SUBMITTALS
1.4 PUBLIC HEALTH EMERGENCIES
1.5 MONTHLY EXPOSURE REPORTS
1.6 REGULATORY REQUIREMENTS
1.7 SITE QUALIFICATIONS, DUTIES, AND MEETINGS
1.7.1 Site Safety and Health Officer (SSHO)
1.7.1.1 Qualifications of SSHO
1.7.1.2 Duties of SSHO
1.7.1.3 Safety Meetings
1.7.2 Roles and Responsibilities of Prime Contractor and SSHO
1.7.3 Contract Site Safety And Health Officer(s)(SSHOs) Minimum Requirements
1.7.4 Preconstruction Conference
1.8 ACCIDENT PREVENTION PLAN (APP)
1.8.1 Accident Prevention Plan (APP)
1.8.2 Names and Qualifications
1.9 ACTIVITY HAZARD ANALYSIS (AHA)
1.9.1 AHA Management
1.9.2 AHA Signature Log
1.10 SITE SAFETY REFERENCE MATERIALS
1.11 EMERGENCY MEDICAL TREATMENT
1.12 NOTIFICATIONS AND REPORTS
1.12.1 Accident Notification
1.12.2 Accident Reports
1.13 HOT WORK PERMIT
1.13.1 Permit and Personnel Requirements
1.13.2 Work Around Flammable Materials
1.14 SEVERE STORM PLAN

PART 2 PRODUCTS

PART 3 EXECUTION

3.1 CONSTRUCTION AND OTHER WORK

3.1.1 Worksite Communication
3.1.2 Hazardous Material Exclusions
3.1.3 Unforeseen Hazardous Material
3.2 USE OF EXPLOSIVES

-- End of Section Table of Contents --

SECTION 01 35 26

GOVERNMENTAL SAFETY REQUIREMENTS

PART 1 GENERAL

1.1 REFERENCES

The publications listed below form a part of this specification to the extent referenced. The publications are referred to within the text by the basic designation only.

AMERICAN SOCIETY OF SAFETY PROFESSIONALS (ASSP)

ANSI/ASSP A10.34	(2021) Protection of the Public on or Adjacent to Construction Sites

INTERNATIONAL SAFETY EQUIPMENT ASSOCIATION (ISEA)

ANSI/ISEA Z89.1	(2014; R 2019) American National Standard for Industrial Head Protection

NATIONAL FIRE PROTECTION ASSOCIATION (NFPA)

NFPA 51B	(2024) Standard for Fire Prevention During Welding, Cutting, and Other Hot Work
NFPA 70	(2026) National Electrical Code
NFPA 70E	(2024) Standard for Electrical Safety in the Workplace
NFPA 241	(2022; ERTA 22-1) Standard for Safeguarding Construction, Alteration, and Demolition Operations

U.S. ARMY CORPS OF ENGINEERS (USACE)

EM 385-1-1	(2024) Safety -- Safety and Occupational Health (SOH) Requirements

1.2 DEFINITIONS

The following definitions are for the convenience of the reader. If there is a referenced document in the text of this specification section, that is the document that should define terms for that paragraph. If further clarification is needed, contact the Contracting Officer.

1.2.1 Site Safety and Health Officer (SSHO)

A Contractor Employee that is responsible for overseeing and ensuring implementation of the prime Contractor's Safety and Occupational Health (SOH) program according to the Contract, EM 385-1-1 (where EM stands for "Engineer Manual"), applicable federal, state, and local requirements.

1.2.1.1 Level One SSHO

A designated employee with full-time SOH responsibility that meets and follows the requirements of EM 385-1-1.

1.2.1.2 Level Two SSHO

A designated employee with Level Two SSHO responsibility that meets and follows the requirements of EM 385-1-1. Level Two SSHOs cannot be assigned to projects that have a residual Risk Assessment Code (RAC) of high or extremely high.

1.2.1.3 Level Three SSHO

A designated Qualified Person or Competent Person with SOH responsibility that meets and follows the requirements of EM 385-1-1. Level 3 SSHOs cannot be assigned to projects that have a residual RAC of high or extremely high.

1.2.1.4 Alternate SSHO

An employee that meets the definition of the contract-required level SSHO, but is not the primary SSHO.

1.2.2 Competent Person (CP)

The CP is a person designated in writing, who, through training, knowledge and experience, is capable of identifying, evaluating, and addressing existing and predictable hazards in the working environment or working conditions that are unsanitary, hazardous, or dangerous to personnel, and who has authorization to take prompt corrective measures to eliminate them.

1.2.3 Qualified Person (QP)

The QP is a person designated in writing, who, by possession of a recognized degree, certificate, or professional standing, or extensive knowledge, training, and experience, has successfully demonstrated their ability to solve or resolve problems related to the subject matter, the work, or the project.

1.3 SUBMITTALS

Government Acceptance or Approval does not remove responsibility from the Contractors for their actions or liability.

Government approval is required for submittals with a "G" classification. Submittals not having a "G" classification are for information only. When used, a code following the "G" classification identifies the office that will review the submittal for the Government. Submit the following in accordance with Section 01 33 00 SUBMITTAL PROCEDURES:

SD-01 Preconstruction Submittals

Accident Prevention Plan (APP); G, AO

SD-06 Test Reports

Accident Reports; G, AO

Monthly Exposure Reports; G, AO

SD-07 Certificates

Activity Hazard Analysis (AHA); G, AO

Hot Work Permit

1.4 PUBLIC HEALTH EMERGENCIES

In the event of a declared public health emergency, follow safety precautions as required by the Occupational Safety and Health Administration (OSHA) www.osha.gov, the Centers for Disease Control and Prevention (CDC) www.cdc.gov, and as required by federal, state and local requirements.

1.5 MONTHLY EXPOSURE REPORTS

Provide a Monthly Exposure Report by the fifth day of each month for the previous month. This report is a compilation of employee-hours worked each month for all site workers, both Prime and subcontractor. Failure to submit the report may result in retention of up to 10 percent of the progress payment. Submit the hours via the agency construction management system of record.

1.6 REGULATORY REQUIREMENTS

In addition to the detailed requirements included in the provisions of this Contract, comply with the most recent edition of USACE EM 385-1-1, and the following federal, state, and local laws, ordinances, criteria, rules and regulations at the date of the Solicitation for this Contract. Submit matters of interpretation of standards to the appropriate administrative agency for resolution before starting work. Where the requirements of this specification, applicable laws, criteria, ordinances, regulations, and referenced documents vary, the most stringent requirements govern.

1.7 SITE QUALIFICATIONS, DUTIES, AND MEETINGS

1.7.1 Site Safety and Health Officer (SSHO)

1.7.1.1 Qualifications of SSHO

All SSHOs will have met the training, experience requirements identified in the EM 385-1-1 and this Contract.

1.7.1.2 Duties of SSHO

All SSHOs will carry out the roles and responsibilities as identified in this Contract and the EM 385-1-1. All SSHOs will be designated on an ENG Form 6282, provided by the Contracting Officer. Superintendent, QC Manager, and SSHO are subject to dismissal if their required duties are not being effectively carried out. If either the Superintendent, QC Manager, or SSHO are dismissed, project work will be stopped and will not be allowed to resume until a suitable replacement is approved and the above duties are again being effectively carried out.

1.7.1.3 Safety Meetings

Conduct safety meetings to review past activities, plan for new or changed operations, review pertinent aspects of appropriate AHA (by trade), establish safe working procedures for anticipated hazards, and provide pertinent Safety and Occupational Health (SOH) training and motivation. Conduct meetings at least once a month for all supervisors at the project location. The SSHO, supervisors, or foremen must conduct meetings at least once a week for the trade workers. Document meeting minutes to include the date, persons in attendance, subjects discussed, and names of individual(s) who conducted the meeting. Maintain documentation on-site and furnish copies to the Contracting Officer on request. Notify the Contracting Officer of all scheduled meetings 7 calendar days in advance.

1.7.2 Roles and Responsibilities of Prime Contractor and SSHO

The Prime Contractor and SSHO must ensure that the requirements of all applicable OSHA and EM 385-1-1 are met for the project. The Prime Contractor must ensure an SSHO or an equally qualified Alternate SSHO(s) is at the worksite at all times to implement and administer the Contractor's safety program and Government accepted Accident Prevention Plan. "Worksite" is defined as the physical location of construction activities. If the required SSHO has to temporarily (that is, up to 24 hours / 1 day) leave the site of work due to unforeseen or emergency situations, a Level One, Two, or Three SSHO may be used in the interim and must be on the site of work at all times when work is being performed.

If the SSHO must be off-site for a period longer than 24 hours / 1 day, a qualified alternate that meets the contract requirements must be onsite.

a. Prime contractor must ensure all SSHOs:

(1) Are designated on an ENG Form 6282.

(2) Meet minimum training and experience requirements identified in EM 385-1-1.

(3) Execute roles and responsibilities identified in EM 385-1-1.

1.7.3 Contract Site Safety And Health Officer(s)(SSHOs) Minimum Requirements

Provide a minimum of one Level One SSHO that meets the requirements of EM 385-1-1 for this project.

1.7.4 Preconstruction Conference

a. Contractor representatives who have a responsibility or significant role in accident prevention on the project must attend the preconstruction conference. This includes the project superintendent, Site Safety and Occupational Health Officer, quality control manager, or any other assigned safety and health professionals who participated in the development of the APP (including the Activity Hazard Analyses (AHAs) and special plans, program and procedures associated with it).

b. Discuss the details of the submitted APP to include incorporated plans, programs, procedures and a listing of anticipated AHAs that will be developed and implemented during the performance of the Contract. This list of proposed AHAs will be reviewed and an

agreement will be reached between the Contractor and the Contracting Officer as to which phases will require an analysis. In addition, establish a schedule for the preparation, submittal, and Government review of AHAs to preclude project delays. The creation of the APP and Schedule will be created after being given Notice to Proceed.

c. Deficiencies in the submitted APP, identified during the Contracting Officer's review, must be corrected and the APP re-submitted for review prior to the start of construction. Work is not permitted to begin until an APP is established that is acceptable to the Contracting Officer.

1.8 ACCIDENT PREVENTION PLAN (APP)

1.8.1 Accident Prevention Plan (APP)

Submit the Accident Prevention Plan (APP) for review and acceptance by the Government at least 15 calendar days prior to the start, after being given Notice to Proceed. A competent person must prepare the written site-specific APP. Prepare the APP in accordance with the format and requirements of EM 385-1-1, ENG Form 6293, and herein. The APP must be job-specific and address any unusual or unique aspects of the project or activity for which it is written. The APP must interface with the Contractor's overall safety and occupational health program referenced in the APP in the applicable APP element and made site-specific. Describe the methods to evaluate past safety performance of potential subcontractors in the selection process. Also, describe innovative methods used to ensure and monitor safe work practices of subcontractors. The Government considers the Prime Contractor to be the "controlling employer" for all worksite safety and health of the subcontractors. Contractors are responsible for informing their subcontractors of the safety provisions under the terms of the Contract and the penalties for noncompliance, coordinating the work to prevent one craft from interfering with or creating hazardous working conditions for other crafts, and inspecting subcontractor operations to ensure that accident prevention responsibilities are being carried out. The APP must be signed in accordance with the APP and ENG Form 6293 Accident Prevention Plan Worksheet. The SSHO must provide and maintain the APP and a log of signatures by each subcontractor foreman, attesting that they have read and understand the APP, and make the APP and log available on-site to the Contracting Officer. If English is not the foreman's primary language, the Prime Contractor must provide an interpreter.

Submit the APP to the Contracting Officer within 30 calendar days of Contract award. Work cannot proceed without an accepted APP. Once reviewed and accepted by the Contracting Officer, the APP and attachments will be enforced as part of the Contract. Disregarding the provisions of this Contract or the accepted APP is cause for stopping of work, at the discretion of the Contracting Officer, until the matter has been rectified. Continuously review and amend the APP, as necessary, throughout the life of the Contract. Changes to the accepted APP must be made with the knowledge and concurrence of the Contracting Officer, project superintendent, SSHO and Quality Control Manager. Incorporate unusual or high-hazard activities not identified in the original APP as they are discovered. Should any severe hazard exposure (i.e., imminent danger) become evident, stop work in the area, secure the area, and develop a plan to remove the exposure and control the hazard. Notify the Contracting Officer within 24 hours of discovery. Eliminate and remove the hazard. In the interim, take all necessary action to restore and

maintain safe working conditions in order to safeguard onsite personnel, visitors, the public (as defined by ANSI/ASSP A10.34), and the environment.

1.8.2 Names and Qualifications

Provide plans in accordance with the requirements outlined in EM 385-1-1, including the following:

a. Names and qualifications (resumes including education, training, experience and certifications) of site safety and health personnel designated to perform work on this project to include the designated Site Safety and Health Officer and other competent and qualified personnel to be used. Specify the duties of each position.

b. As a minimum, designate and submit qualifications of Competent Persons (CP) for each of the following major areas: excavation; scaffolding; fall protection; hazardous energy; confined space; health hazard recognition, evaluation and control of chemical, physical and biological agents; and personal protective equipment and clothing to include selection, use and maintenance. Designate and submit qualifications for additional CPs as applicable to the work performed under this Contract.

1.9 ACTIVITY HAZARD ANALYSIS (AHA)

Before beginning each activity, task or Definable Feature of Work (DFOW) involving a type of work presenting hazards not experienced in previous project operations, or where a new work crew or subcontractor is to perform the work, the Contractor(s) performing that work activity must prepare an AHA. AHAs must be developed by the Prime Contractor, subcontractor, or supplier performing the work, and provided for Prime Contractor review and approval before submitting to the Contracting Officer. AHAs must be signed by the SSHO, Superintendent, QC Manager and the subcontractor Foreman performing the work. Format the AHA in accordance with EM 385-1-1 or as directed by the Contracting Officer. Submit the AHA for review at least 15 working days prior to the start of each activity task, or DFOW. The Government reserves the right to require the Contractor to revise and resubmit the AHA if it fails to effectively identify the work sequences, specific anticipated hazards, site conditions, equipment, materials, personnel and the control measures to be implemented.

AHAs must identify competent persons required for phases involving high risk activities, including confined entry, crane and rigging, excavations, trenching, electrical work, fall protection, and scaffolding.

1.9.1 AHA Management

Review the AHA list periodically (at least monthly) at the Contractor supervisory safety meeting, and update as necessary when procedures, scheduling, or hazards change. Use the AHA during daily inspections by the SSHO to ensure the implementation and effectiveness of the required safety and health controls for that work activity.

1.9.2 AHA Signature Log

Each employee performing work as part of an activity, task or DFOW must review the AHA for that work and sign a signature log specifically maintained for that AHA prior to starting work on that activity. The SSHO

must maintain a signature log on site for every AHA. Provide employees whose primary language is other than English, with an interpreter to ensure a clear understanding of the AHA and its contents.

1.10 SITE SAFETY REFERENCE MATERIALS

Maintain safety-related references applicable to the project, including those listed in paragraph REFERENCES. Maintain applicable equipment manufacturer's manuals.

1.11 EMERGENCY MEDICAL TREATMENT

Contractors must arrange for their own emergency medical treatment in accordance with EM 385-1-1. The Government has no responsibility to provide emergency medical treatment.

1.12 NOTIFICATIONS AND REPORTS

1.12.1 Accident Notification

Notify the Contracting Officer in accordance with the EM 385-1-1 Accident Reporting Timeline.

Table
Accident Reporting Required Timeline

Accident Type	Notify Contracting Officer	Complete Final Accident Report on ENG 3394 and provide to Contracting Officer
Fatality, in-patient hospitalization, amputation, eye loss, or property damage over $600,000.	Immediately, no later than (NLT) 8 Hours	Within 7 Days
All other accidents and near misses	Immediately, no later than (NLT) 24 Hours	Within 7 Days

Within notification include Contractor name; Contract title; type of Contract; name of activity, installation or location where accident occurred; date and time of accident; names of personnel injured; extent of property damage, if any; extent of injury, if known, and brief description of accident (for example, type of construction equipment used and PPE used). Preserve the conditions and evidence on the accident site until the Government investigation team arrives on-site and Government investigation is conducted. Assist and cooperate fully with the Government's investigation(s) of any accident or near miss.

1.12.2 Accident Reports

a. Conduct an accident investigation for recordable injuries and illnesses, property damage, and near misses as defined in EM 385-1-1, to establish the root cause(s) of the accident. All accidents are reportable, regardless of whether or not it is recordable. Complete the applicable USACE Accident Report, ENG Form 3394, and provide the report to the Contracting Officer within 7 calendar days of the

accident. The Contracting Officer will provide copies of any required or special forms. All accidents are reportable, regardless of whether or not it is recordable.

b. Near Misses: For Army projects, report all "Near Misses" to the Contracting Officer, using local accident reporting procedures, within 24 hours. The Contracting Officer will provide the Contractor the required forms. Near miss reports are considered positive and proactive Contractor safety management actions.

1.13 HOT WORK PERMIT

1.13.1 Permit and Personnel Requirements

Submit and obtain a written permit prior to performing "Hot Work" (i.e., welding or cutting) or operating other flame-producing/spark producing devices, from the Fire Division. A permit is required from the Explosives Safety Office for work in and around where explosives are processed, stored, or handled. Contractors are required to meet all criteria before a permit is issued. Provide at least two 20-pound 4A:20 BC rated extinguishers for normal "Hot Work". The extinguishers must be current inspection tagged and contain an approved safety pin and tamper resistant seal. It is also mandatory to have a designated FIRE WATCH for any "Hot Work" done at this activity. The Fire Watch must be trained in accordance with NFPA 51B and remain on-site for a minimum of 1 hour after completion of the task or as specified on the hot work permit.

When starting work in the facility, require personnel to familiarize themselves with the location of the nearest fire alarm boxes and place in memory the emergency Fire Division phone number. Report any fire, no matter how small, to the responsible Fire Division immediately.

1.13.2 Work Around Flammable Materials

Obtain permit approval from a NFPA Certified Marine Chemist, or Certified Industrial Hygienist for "Hot Work" within or around flammable materials (such as fuel systems or welding/cutting on fuel pipes) or confined spaces (such as sewer wet wells, manholes, or vaults) that have the potential for flammable or explosive atmospheres.

Whenever these materials, except beryllium and chromium (VI), are encountered in indoor operations, local mechanical exhaust ventilation systems that are sufficient to reduce and maintain personal exposures to within acceptable limits must be used and maintained in accordance with manufacturer's instruction and supplemented by exceptions noted in EM 385-1-1.

1.14 SEVERE STORM PLAN

In the event of a severe storm warning, the Contractor must comply with the applicable Storm Plan and:

a. Secure outside equipment and materials and place materials that could be damaged in protected areas.

b. Check surrounding area, including roof, for loose material, equipment, debris, and other objects that could be blown away or against existing facilities.

c. Ensure that temporary erosion controls are adequate.

PART 2 PRODUCTS

Not Used

PART 3 EXECUTION

3.1 CONSTRUCTION AND OTHER WORK

Comply with EM 385-1-1, NFPA 70, NFPA 70E, NFPA 241, the APP, the AHA, Federal and State OSHA regulations, and other related submittals and activity fire and safety regulations. The most stringent standard prevails.

PPE is governed in all areas by the nature of the work the employee is performing. Always use personal hearing protection in designated noise hazardous areas or when performing noise hazardous tasks. Safety glasses must be worn or carried/available on each person. Mandatory PPE includes:

a. Head Protection that meets ANSI/ISEA Z89.1

b. Long Pants

c. Appropriate Safety Footwear

d. Appropriate Class Reflective Vests

3.1.1 Worksite Communication

Employees working alone in a remote location or away from other workers must be provided an effective means of emergency communications (i.e., cellular phone, two-way radios, land-line telephones or other acceptable means). The selected communication must be readily available (easily within the immediate reach) of the employee and must be tested prior to the start of work to verify that it effectively operates in the area/environment. Develop an employee check-in/check-out communication procedure to ensure employee safety.

3.1.2 Hazardous Material Exclusions

Notwithstanding any other hazardous material used in this Contract, radioactive materials or instruments capable of producing ionizing/non-ionizing radiation (with the exception of radioactive material and devices used in accordance with EM 385-1-1 such as nuclear density meters for compaction testing and laboratory equipment with radioactive sources) as well as materials which contain asbestos, mercury or polychlorinated biphenyls, di-isocyanates, lead-based paint, and hexavalent chromium, are prohibited. The Contracting Officer, upon written request by the Contractor, may consider exceptions to the use of any of the above excluded materials. Low mercury lamps used within fluorescent lighting fixtures are allowed as an exception without further Contracting Officer approval. Notify the Radiation Safety Officer (RSO) prior to excepted items of radioactive material and devices being brought on base.

3.1.3 Unforeseen Hazardous Material

Contract documents identify materials such as PCB, lead paint, and friable

and non-friable asbestos and other OSHA regulated chemicals (i.e., 29 CFR Part 1910.1000). If material(s) that may be hazardous to human health upon disturbance are encountered during demolition, repair, renovation, or construction operations, stop that portion of work and notify the Contracting Officer immediately. Within 14 calendar days the Government will determine if the material is hazardous. If material is not hazardous or poses no danger, the Government will direct the Contractor to proceed without change. If material is hazardous and handling of the material is necessary to accomplish the work, the Government will issue a modification.

3.2 USE OF EXPLOSIVES

Explosives must not be used or brought to the project site without prior written approval from the Contracting Officer. Such approval does not relieve the Contractor of responsibility for injury to persons or for damage to property due to blasting operations.

Storage of explosives, when permitted on Government property, must be only where directed and in approved storage facilities. These facilities must always be locked except for inspection, delivery, and withdrawal of explosives.

-- End of Section --

SECTION TABLE OF CONTENTS

DIVISION 01 - GENERAL REQUIREMENTS

SECTION 01 41 26.01 24

(SOUTH DAKOTA) NPDES PERMIT REQUIREMENTS FOR STORM WATER DISCHARGES FROM CONSTRUCTION SITES

PART 1 GENERAL

1.1 REFERENCES (Not Applicable)
1.2 SUBMITTALS

PART 2 PRODUCTS (Not Applicable)

PART 3 EXECUTION

3.1 GENERAL
3.2 IMPLEMENTATION
3.2.1 Notice of Intent
3.2.2 Authorization Letter
3.2.3 Posting NOI and Authorization Letter
3.2.4 Storm Water Pollution Prevention Plan
3.2.5 Inspections and Reporting
3.2.6 Retention of Records
3.2.7 Notice of Termination
3.2.8 Renotification

-- End of Section Table of Contents --

SECTION 01 41 26.01 24

(SOUTH DAKOTA) NPDES PERMIT REQUIREMENTS FOR STORM WATER DISCHARGES FROM CONSTRUCTION SITES

PART 1 GENERAL

The General Permit for the State of South Dakota, "General Permit For Authorizing Storm Water Discharges Associated With Construction Activities Under the South Dakota Surface Water Discharge System", Permit No. SDR100000, hereinafter referred to as the "General Permit", can be found at the following website: https://danr.sd.gov/OfficeOfWater/SurfaceWaterQuality/stormwater/StormWaterConstruction.aspx

1.1 REFERENCES (Not Applicable)

1.2 SUBMITTALS

Government approval is required for submittals with a "G" designation; submittals not having an "G" designation are for information only. When used, a designation following the "G" designation identifies the office that will review the submittal for the Government. Submit the following in accordance with Section 01 33 00 SUBMITTAL PROCEDURES:

SD-01 Preconstruction Submittals

Notice of Intent

Authorization Letter

Storm Water Pollution Prevention Plan; G, RO

Notice of Termination

SWPPP Preparer Training Certification

SD-06 Test Reports

Reports

PART 2 PRODUCTS (Not Applicable)

PART 3 EXECUTION

3.1 GENERAL

Implement the terms and requirements of the General Permit for storm water discharges from construction sites. The Contractor shall be considered the "permittee". Submit all General Permit requirement to the State of South Dakota using the EPA CDX portal. Contractor Authorization forms will still need to be submitted by email (stormwater@state.sd.us), or to the address listed in Section 7.3 of the General Permit using hard copy

mail. Furnish a copy of each submission to the Contracting Officer's Representative (COR).

3.2 IMPLEMENTATION

3.2.1 Notice of Intent

Complete and submit a Notice of Intent (NOI) in accordance with the G eneral Permit. Furnish a copy of the submitted NOI to the COR at least 30 days prior to the commencement of construction activities. The Government shall be considered the "Applicant" and will sign as such on the form after review by the COR. Complete Appendix C entitled "Contract Authorization Form" in the General Permit and submit with the NOI. Complete the SWPPP before submitting the NOI for review by the COR. ***NOTE: The Contractor is responsible for any Notice of Violations that occur while the NPDES Permit is in effect. The Contractor will be responsible for paying for any violation fines and/or making any corrections necessary.***

The State Of South Dakota requires stormwater permit fees. Effective July 1, 2018 new construction Notice of Intents (NOIs) must include the first year's fee, which shall be paid by the Contractor at the time of the NOI filing. (If the fee is not paid, the owner of the project will be billed, but the Contractor will be responsible for the fee.) The fee is as follows:

- <5 acres = $100
- 5 to <40 acres = $250
- 40 to <80 acres = $500
- 80+ acres = $750

NOTE: These fees are per year and must be paid every year of the project by the Contractor.

3.2.2 Authorization Letter

Do not begin construction activities regulated under the General Permit until receipt of an authorization letter from the State granting coverage for the storm water discharges. Submit a copy of the authorization letter to the COR prior to the commencement of construction activities.

3.2.3 Posting NOI and Authorization Letter

Post a copy of the NOI and the authorization letter at the construction site in a prominent place for public viewing.

3.2.4 Storm Water Pollution Prevention Plan

Prepare and implement a Storm Water Pollution Prevention Plan (SWPPP) in accordance with the General Permit. The Government recommends use of the SWPPP template provided by the EPA as a basis for the project SWPPP: https://www.epa.gov/npdes/construction-general-permit-resources-tools-and-templates/. Ensure the SWPPP preparer is trained in the principles and practice of erosion and sediment controls. Include all requirements found in Section 5.0 of the General Permit "STORMWATER POLLUTION PREVENTION PLAN" in the SWPPP. Submit the SWPPP preparer training certification and the SWPPP to the COR at least 30 days prior to the commencement of construction activities. Incorporate any temporary or permanent erosion and sedimentation control measures shown on the drawings into the SWPPP. Submit copies of all revisions to the SWPPP.

3.2.5 Inspections and Reporting

Conduct all inspections and reporting required under the General Permit. Furnish copies of all inspection reports to the COR.

3.2.6 Retention of Records

Retain a copy of the SWPPP, reports, and records of all data used to complete the NOI in accordance with the General Permit. The General Permit requires that records and reports be kept for at least three years from the date that the construction permit is terminated.

3.2.7 Notice of Termination

Complete and submit a Notice of Termination (NOT) in accordance with the General Permit. Do not submit the NOT until the site restoration meets conditions of Final Stabilization per the General Permit. Furnish a copy of the NOT to the COR prior to submission to the State. The Government as the "Applicant" must sign and submit the NOT to the State.

3.2.8 Renotification

If the current General Permit expires prior to completion of construction, submit a new NOI in accordance with the General Permit. Furnish a copy of all submissions to the State to the COR.

-- End of Section --

SECTION TABLE OF CONTENTS

DIVISION 01 - GENERAL REQUIREMENTS

SECTION 01 42 00

SOURCES FOR REFERENCE PUBLICATIONS

PART 1 GENERAL

1.1 REFERENCES
1.2 ORDERING INFORMATION

PART 2 PRODUCTS

PART 3 EXECUTION

-- End of Section Table of Contents --

SECTION 01 42 00

SOURCES FOR REFERENCE PUBLICATIONS

PART 1 GENERAL

1.1 REFERENCES

Various publications are referenced in other sections of the specifications to establish requirements for the work. These references are identified in each section by document number, date and title. The document number used in the citation is the number assigned by the standards producing organization (e.g., ASTM B564 Standard Specification for Nickel Alloy Forgings). However, when the standards producing organization has not assigned a number to a document, an identifying number has been assigned for reference purposes.

1.2 ORDERING INFORMATION

The addresses of the standards publishing organizations whose documents are referenced in other sections of these specifications are listed below, and if the source of the publications is different from the address of the sponsoring organization, that information is also provided.

AACE INTERNATIONAL (AACE)
726 East Park Avenue #180
Fairmont, WV 26554 USA
Ph: 304-296-8444
Fax: 304-291-5728
Internet: https://web.aacei.org/

AMERICAN ASSOCIATION OF STATE HIGHWAY AND TRANSPORTATION OFFICIALS (AASHTO)
555 12th Street NW, Suite 1000
Washington, DC 20004
Ph: 202-624-5800
Fax: 202-624-5806
E-Mail: info@aashto.org
Internet: https://www.transportation.org/

AMERICAN SOCIETY OF CIVIL ENGINEERS (ASCE)
1801 Alexander Bell Drive
Reston, VA 20191
Ph: 800-548-2723; 703-295-6300
Email: customercare@asce.org
Internet: https://www.asce.org/

AMERICAN SOCIETY OF SAFETY PROFESSIONALS (ASSP)
520 N. Northwest Highway
Park Ridge, IL 60068
Ph: 847-699-2929
E-mail: customerservice@assp.org
Internet: https://www.assp.org/

ASPHALT INSTITUTE (AI)
2696 Research Park Drive

Lexington, KY 40511-8480
Ph: 859-288-4960 or 1-866-540-9577
Fax: 859-288-4999
E-mail: info@asphaltinstitute.org
Internet: http://www.asphaltinstitute.org

ASTM INTERNATIONAL (ASTM)
100 Barr Harbor Drive, P.O. Box C700
West Conshohocken, PA 19428-2959
Ph: 610-832-9500
Fax: 610-832-9555
E-mail: service@astm.org
Internet: https://www.astm.org/

INTERNATIONAL SAFETY EQUIPMENT ASSOCIATION (ISEA)
1101 Wilson Blvd, Suite 1425
Arlington, VA 22209-1762
Ph: 703-525-1695
Fax: 703-528-2148
Internet: https://safetyequipment.org/

NATIONAL FIRE PROTECTION ASSOCIATION (NFPA)
1 Batterymarch Park
Quincy, MA 02169-7471
Ph: 800-344-3555
Fax: 800-593-6372
Internet: https://www.nfpa.org

SOUTH DAKOTA DEPARTMENT OF TRANSPORTATION (SDDOT)
700 E. Broadway Ave.
Pierre, SD 57501
Ph: 605-773-3265
Fax: 605-773-6214
Internet: https://dot.sd.gov

U.S. ARMY CORPS OF ENGINEERS (USACE)
CRD-C DOCUMENTS available on Internet: https://www.wbdg.org/army
THE CAD/BIM TECHNOLOGY CENTER FOR FACILITIES, INFRASTRUCTURE, AND ENVIRONMENT (USACE)on Internet:
https://cadbimcenter.erdc.dren.mil/
Order Other Documents from:
Official Publications of the Headquarters, USACE
E-mail: hqpublications@usace.army.mil
Internet: http://www.publications.usace.army.mil/
or
https://www.hnc.usace.army.mil/Missions/Engineering-Directorate/TECHINFO/

U.S. DEPARTMENT OF AGRICULTURE (USDA)
Order AMS Publications from:
AGRICULTURAL MARKETING SERVICE (AMS)
Seed Regulatory and Testing Branch
801 Summit Crossing Place, Suite C
Gastonia, NC 28054-2193
Ph: 704-810-8884
E-mail: PA@usda.gov
Internet: https://www.ams.usda.gov/

Order Other Publications from:
USDA Rural Development
Rural Utilities Service
STOP 1510, Rm 5135
1400 Independence Avenue SW
Washington, DC 20250-1510
Phone: (202) 720-9540
Internet:
https://www.rd.usda.gov/about-rd/agencies/rural-utilities-service

U.S. FEDERAL HIGHWAY ADMINISTRATION (FHWA)
1200 New Jersey Ave., SE
Washington, DC 20590
Ph: 202-366-4000
E-mail: ExecSecretariat.FHWA@dot.gov
Internet: https://highways.dot.gov/
Order from:
Superintendent of Documents
U.S. Government Publishing Office (GPO)
732 N. Capitol Street, NW
Washington, DC 20401
Ph: 202-512-1800 or 866-512-1800
Bookstore: 202-512-0132
Internet: https://www.gpo.gov/

U.S. GENERAL SERVICES ADMINISTRATION (GSA)
General Services Administration
1800 F Street, NW
Washington, DC 20405
Ph: 1-844-472-4111
Internet: https://www.gsaelibrary.gsa.gov/ElibMain/home.do
Obtain documents from:
Acquisition Streamlining and Standardization Information System (ASSIST)
Internet: https://assist.dla.mil/online/start/; account registration required

U.S. NATIONAL ARCHIVES AND RECORDS ADMINISTRATION (NARA)
8601 Adelphi Road
College Park, MD 20740-6001
Ph: 866-272-6272
Internet: https://www.archives.gov/
Order documents from:
Superintendent of Documents
U.S. Government Publishing Office (GPO)
732 N. Capitol Street, NW
Washington, DC 20401
Ph: 202-512-1800 or 866-512-1800
Bookstore: 202-512-0132
Internet: https://www.gpo.gov/

PART 2 PRODUCTS

Not used

PART 3 EXECUTION

Not used

-- End of Section --

This page was intentionally left blank for duplex printing.

SECTION TABLE OF CONTENTS

DIVISION 01 - GENERAL REQUIREMENTS

SECTION 01 45 00

QUALITY CONTROL

PART 1 GENERAL

1.1 REFERENCES
1.2 PAYMENT
1.3 SUBMITTALS
1.4 GENERAL REQUIREMENTS
1.5 QUALITY CONTROL (QC) PROGRAM REQUIREMENTS
1.5.1 Meetings
1.5.1.1 Quality Control Plan Meeting
1.5.1.2 Coordination and Mutual Understanding Meeting
1.5.1.2.1 Purpose
1.5.1.2.2 Coordination of Activities
1.5.1.2.3 Attendees
1.5.1.3 Quality Control (QC) Meetings
1.5.2 Contractor Quality Control (CQC) Plan
1.5.2.1 Content of Contractor Quality Control (CQC) Plan
1.5.3 Acceptance of the Quality Control (QC) Plan
1.5.4 Notification of Changes
1.6 QUALITY CONTROL (QC) ORGANIZATION
1.6.1 Personnel Requirements
1.6.2 Quality Control (QC) Manager
1.6.2.1 Duties
1.6.2.2 Qualifications
1.6.2.3 Construction Quality Management Training
1.6.3 Organizational Changes
1.6.4 Alternate Quality Control (QC) Manager Duties and Qualifications
1.7 SUBMITTAL AND DELIVERABLES REVIEW AND APPROVAL
1.8 THREE PHASES OF CONTROL
1.8.1 Preparatory Phase
1.8.2 Initial Phase
1.8.3 Follow-Up Phase
1.8.4 Additional Preparatory and Initial Phases
1.8.5 Notification of Three Phases of Control for Off-Site Work
1.8.6 Deficiency/Rework Items List
1.9 TESTING
1.9.1 Laboratory Accreditation Authorities
1.9.2 Capability Check
1.9.2.1 Capability Recheck
1.9.2.2 Onsite Laboratory
1.9.3 Test Results
1.10 COMPLETION INSPECTIONS
1.10.1 Punch-Out Inspection
1.10.2 Pre-Final Inspection
1.10.3 Final Acceptance Inspection
1.11 QUALITY CONTROL (QC) CERTIFICATIONS

1.11.1 Contractor Quality Control (CQC) Report Certification
1.11.2 Completion Certification
1.12 DOCUMENTATION AND INFORMATION FOR THE CONTRACTING OFFICER
1.12.1 Construction Documentation
1.12.2 Quality Control Activities
1.12.3 Verification Statement
1.12.4 Quality Control Validation
1.12.5 Testing Plan and Log
1.12.6 As-Built Drawings
1.13 NOTIFICATION ON NON-COMPLIANCE
1.14 DELIVERY, STORAGE, AND HANDLING

PART 2 PRODUCTS

PART 3 EXECUTION

-- End of Section Table of Contents --

SECTION 01 45 00

QUALITY CONTROL

PART 1 GENERAL

1.1 REFERENCES

The publications listed below form a part of this specification to the extent referenced. The publications are referred to in the text by the basic designation only.

ASTM INTERNATIONAL (ASTM)

ASTM D3740	(2019) Minimum Requirements for Agencies Engaged in the Testing and/or Inspection of Soil and Rock as Used in Engineering Design and Construction
ASTM E329	(2025b) Standard Specification for Agencies Engaged in Construction Inspection, Testing, or Special Inspection

U.S. ARMY CORPS OF ENGINEERS (USACE)

EM 385-1-1	(2024) Safety -- Safety and Occupational Health (SOH) Requirements

1.2 PAYMENT

Separate payment will not be made for providing and maintaining an effective Quality Control program. Include all associated costs in the applicable Bid Schedule item.

1.3 SUBMITTALS

Government approval is required for submittals with a "G" classification. Submittals not having a "G" classification are for information only. When used, a code following the "G" classification identifies the office that will review the submittal for the Government. Submit the following in accordance with Section 01 33 00 SUBMITTAL PROCEDURES.

SD-01 Preconstruction Submittals

Contractor Quality Control (CQC) Plan; G, AO

SD-06 Test Reports

Verification Statement

1.4 GENERAL REQUIREMENTS

Establish and maintain an effective quality control (QC) system that complies with FAR 52.246-12 Inspection of Construction. QC is comprised of plans, procedures, and organization necessary to produce a product that complies with the Contract requirements. The QC system covers all construction operations, both onsite and offsite, and must be keyed to the proposed construction sequence. The Quality Control Manager, Superintendent, Site Safety and Health Officer (SSHO), and all on-site supervisors are responsible for the quality of work and are subject to removal by the Contracting Officer for non-compliance with the quality requirements specified in the Contract. The Quality Control Manager must always maintain a physical presence at the work site and is the primary individual responsible for all quality control. "Work site" is defined as the physical location of construction activities.

1.5 QUALITY CONTROL (QC) PROGRAM REQUIREMENTS

Establish and maintain a QC program as described in this section. The QC program consists of a QC Organization, QC Plan, QC Plan Meeting(s), a Coordination and Mutual Understanding Meeting, QC meetings, three phases of control, submittal review and approval, testing, completion inspections, QC certifications, and documentation necessary to provide materials, equipment, workmanship, fabrication, construction and operations that comply with the requirements of this Contract. The QC program must cover on-site and off-site work and be keyed to the work sequence. No construction work or testing may be performed unless the QC Manager is on the work site. The QC Manager must report to an officer of the firm and not be subordinate to the Project Superintendent or the Project Manager. The QC Manager, Project Superintendent and Project Manager must work together effectively. Although the QC Manager is the primary individual responsible for quality control, all individuals will be held responsible for the quality of work on the job.

1.5.1 Meetings

1.5.1.1 Quality Control Plan Meeting

Prior to submission of the QC Plan, the Contractor may request a meeting with the Contracting Officer to discuss the QC Plan requirements of this Contract.

The purpose of this meeting is to develop a mutual understanding of the QC Plan requirements prior to plan development and submission and to agree on the Contractor's list of Definable Feature of Work (DFOW).

1.5.1.2 Coordination and Mutual Understanding Meeting

After the Preconstruction Conference, before start of construction, and prior to acceptance by the Government of the CQC Plan, meet with the Contracting Officer and discuss the Contractor's quality control system. During the meeting, a mutual understanding of the system details must be developed, including the forms for recording the CQC operations, control activities, testing, administration of the system for both onsite and offsite work, and the interrelationship of Contractor's Management and control with the Government's Quality Assurance. Minutes of the meeting

will be prepared by the QC Manager and signed by the Contractor and the Government. Provide a copy of the signed minutes to all attendees and incorporate in the relevant QC Plan. At a minimum the Coordination and Mutual Understanding Meeting must be repeated when a new QC Manager is appointed. There can be other occasions when subsequent conferences will be called by either party to reconfirm mutual understandings or address deficiencies in the CQC system or procedures which can require corrective action by the Contractor.

1.5.1.2.1 Purpose

The purpose of this meeting is to develop a mutual understanding of the QC details, including documentation, administration for on-site and off-site work, design intent, environmental requirements and procedures, coordination of activities to be performed, and the coordination of the Contractor's management, production, and QC personnel. At the meeting, the Contractor must explain in detail how three phases of control will be implemented for each DFOW, as well as how each DFOW will be affected by each management plan or requirement as listed below:

a. Waste Management Plan.

b. Procedures for noise and acoustics management.

c. Environmental Protection Plan.

d. Environmental regulatory requirements.

1.5.1.2.2 Coordination of Activities

Coordinate activities included in various sections to assure efficient and orderly installation of each component. Coordinate operations included under different sections that are dependent on each other for proper installation and operation.

1.5.1.2.3 Attendees

As a minimum, the Contractor's personnel required to attend include an officer of the firm, the Project Manager, Project Superintendent, QC Manager, Alternate QC Manager, Environmental Manager, and subcontractor representatives. Each subcontractor who will be assigned QC responsibilities must have a principal of the firm at the meeting.

1.5.1.3 Quality Control (QC) Meetings

After the start of construction, conduct weekly QC meetings led by the QC Manager at the work site with the Project Superintendent, and the other personnel as necessary. The QC Manager is to prepare the minutes of the meeting and provide a copy to the Contracting Officer within two working days after the meeting. The Contracting Officer may attend these meetings. As a minimum, accomplish the following at each meeting:

a. Review the minutes of the previous meeting.

b. Review the schedule and the status of work and deficiencies/rework. Review the most current approved schedule (in accordance with schedule specification) and the status of work and deficiencies/rework.

c. Review the status of submittals and Request For Information (RFIs).

d. Review the work to be accomplished in the next three weeks as defined by the schedule section paragraph WEEKLY PROGRESS MEETINGS in Section 01 32 01.00 10 PROJECT SCHEDULE and all quality control documentation required for that work.

e. Review Testing Plan and Log including status of tests performed since last QC Meeting.

f. Resolve QC and production problems. Discuss status of pending change orders.

g. Address items that may require revising the QC Plan.

h. Review Accident Prevention Plan (APP) and effectiveness of the safety program.

i. Review environmental requirements and procedures.

j. Review Environmental Management Plan.

k. Review Waste Management Plan.

l. Review the status of training completion.

1.5.2 Contractor Quality Control (CQC) Plan

Submit no later than 30 calendar days after receipt of notice to proceed, the CQC Plan proposed to implement the requirements FAR 52.246-12 Inspection of Construction. The Government will consider an interim plan for the first 30 calendar days of operation. Construction will be permitted to begin only after acceptance of the CQC Plan and other Contract requirements or acceptance of an interim plan applicable to the feature of work to be started. Work outside of the accepted interim plan will not be permitted to begin until acceptance of a CQC Plan or another interim plan containing the additional work.

1.5.2.1 Content of Contractor Quality Control (CQC) Plan

Provide a CQC Plan, prior to start of construction that includes a table of contents, with major sections identified, pages numbered sequentially, and that documents the proposed methods and responsibilities for accomplishing quality control during the construction of the project. The CQC Plan must at a minimum include the following sections:

a. A description of the quality control organization and acknowledgment that the CQC staff will implement the three-phase control system for all aspects of the work specified. Include a CQC System Manager who reports to the Project Manager or another Quality Management Executive in the organization (not the Superintendent). Project Manager in this context means the individual with responsibility for the overall management of the project, including quality and production.

b. An organizational chart showing the quality control organization with individual names and job titles and lines of authority up to an executive of the company at the home office.

c. NAMES AND QUALIFICATIONS: Names and qualifications, in resume format, (including position titles and durations for qualifying experiences) for each person in the QC organization. Include the Construction Quality Management (CQM) for Contractors course certifications for the QC personnel as required by the paragraph CONSTRUCTION QUALITY MANAGEMENT TRAINING.

d. DUTIES, RESPONSIBILITY AND AUTHORITY OF QC PERSONNEL: Duties, responsibilities, and authorities of each person in the QC organization.

e. OUTSIDE ORGANIZATIONS: A listing of outside organizations, such as architectural and consulting engineering firms, that will be employed by the Contractor and a description of the services these firms will provide.

f. APPOINTMENT LETTERS: Letters signed by an officer of the firm appointing the QC Manager and Alternate QC Manager, and stating that they are responsible for implementing and managing the QC program as described in this Contract. Include in this letter the responsibility of the QC Manager and Alternate QC Manager to implement and manage the three phases of control, and their authority to stop work that is not in compliance with the Contract. Letters of direction are to be issued by the QC Manager to all other QC Specialists or quality control representatives outlining their duties, authorities, and responsibilities. Include copies of the letters in the QC Plan.

g. SUBMITTAL PROCEDURES AND INITIAL SUBMITTAL REGISTER: Procedures for reviewing, approving, scheduling, and managing submittals, including those of subcontractors, offsite fabricators, suppliers, and purchasing agents. Provide the name(s) of the person(s) in the QC organization authorized to review and certify submittals prior to approval. Provide the initial submittal of the Submittal Register as specified in Section 01 33 00 SUBMITTAL PROCEDURES.

h. TESTING LABORATORY INFORMATION: Testing laboratory information required by the paragraph ACCREDITATION REQUIREMENTS, as applicable.

i. TESTING PLAN AND LOG: A Testing Plan and Log that includes the tests required, associated feature of work required, referenced by the specification paragraph number requiring the test, the frequency, and the person responsible for each test.

j. Procedures to complete construction deficiencies from identification through acceptable corrective action. Establish verification procedures that identified deficiencies have been corrected. This phase is performed prior to beginning work on each definable feature of work, after all required plans, documents, materials are approved, and after copies are at the work site.

k. Reporting procedures, including proposed reporting formats.

l. Procedures for submitting and reviewing design changes/variations prior to submission to the Contracting Officer.

m. LIST OF DEFINABLE FEATURES: A Definable Feature of Work (DFOW) is a task that is separate and distinct from other tasks and has control requirements and work crews unique to that task. A DFOW is identified by different trades or disciplines, or it is work by the same trade in

a different environment. A DFOW is any item or activity on the construction schedule, and the schedule specification provides direction regarding how the DFOWs are to be structured. Include in the list of DFOWs for all activities on the Construction Schedule. Although each section of the specifications can generally be considered as a definable feature of work, there are frequently multiple definable features under a particular section. Identify the specification section number and schedule activity ID for each DFOW listed. The DFOW list will be reviewed in coordination with the construction schedule and agreed upon during the Coordination of Mutual Understanding Meeting.

n. PROCEDURES FOR PERFORMING AND TRACKING THE THREE PHASES OF CONTROL: Identify procedures used to ensure the three phases of control to manage the quality on this project. For each Definable Feature of Work (DFOW), a Preparatory and Initial phase checklist will be filled out during the Preparatory and Initial phase meetings. Conduct the Preparatory and Initial Phases and meetings with a view towards obtaining quality construction by planning ahead and identifying potential problems for each DFOW.

1.5.3 Acceptance of the Quality Control (QC) Plan

The Contracting Officer's acceptance of the Contractor QC Plan, or interim plan applicable to the particular feature of work to be started,is required prior to the start of construction. The Government will consider an interim plan for the first 30 calendar days of operation. Work outside of the accepted interim plan will not be permitted to begin until acceptance of a CQC Plan or another interim plan containing the additional work. The Contracting Officer reserves the right to require changes in the QC Plan and operations as necessary, including removal or addition of personnel, to ensure the specified quality of work. The Contracting Officer reserves the right to interview any member of the QC organization at any time to verify the submitted qualifications. All QC organization personnel are subject to acceptance by the Contracting Officer. The Contracting Officer may require the removal of any individual for non-compliance with quality requirements specified in the Contract.

1.5.4 Notification of Changes

Notify the Contracting Officer, in writing, of any proposed changes in the QC Plan or changes to the QC organization personnel. Proposed changes are subject to acceptance by the Contracting Officer.

1.6 QUALITY CONTROL (QC) ORGANIZATION

1.6.1 Personnel Requirements

The requirements for the CQC organization are a Site Safety and Health Officer (SSHO), QC Manager, and enough qualified personnel to ensure safety and Contract compliance. The SSHO reports directly to a senior project (or corporate) official independent from the QC Manager. The SSHO will also serve as a member of the CQC Staff Personnel identified in the technical provisions as requiring specialized skills to assure the required work is being performed properly. The CQC staff always maintains a presence at the site during progress of the work and have complete authority and responsibility to take any action necessary to ensure Contract compliance. The CQC staff will be subject to acceptance by the Contracting Officer. Provide adequate office space, filing systems and

other resources as necessary to maintain an effective and fully functional CQC organization. Promptly complete and furnish all letters, material submittals, shop drawing submittals, schedules, and all other project documentation to the CQC organization. The CQC organization is responsible for always maintaining these documents and records at the site, except as otherwise acceptable to the Contracting Officer.

1.6.2 Quality Control (QC) Manager

1.6.2.1 Duties

Provide a QC Manager at the work site to implement and manage the QC program. The QC Manager must be employed by the Prime Contractor. The only duties and responsibilities of the QC Manager are to manage and implement the QC program on this Contract. The QC Manager must attend the Coordination and Mutual Understanding Meeting, perform the three phases of control, perform submittal review and approval, ensure testing is performed and provide QC certifications and documentation required in this Contract. The QC Manager is responsible for managing and coordinating the three phases of control and documentation performed by testing laboratory personnel and any other inspection and testing personnel required by this Contract. The QC Manager is the manager of all QC activities.

1.6.2.2 Qualifications

The QC Manager must be an individual with a minimum of 5 years' combined experience in the following positions: Project Superintendent, QC Manager, Project Manager, Project Engineer or Construction Manager on similar size and type construction Contracts which included the major trades that are part of this Contract. The individual must have at least 2 years' experience as a QC Manager. The individual must be familiar with the requirements of EM 385-1-1 and have experience in the areas of hazard identification, safety compliance, and sustainability.

The QC Manager and all members of the QC organization must be capable of reading, writing, and conversing fluently in the English language.

1.6.2.3 Construction Quality Management Training

In addition to the above experience and education requirements, the QC Manager, Alternate QC Manager, and Superintendent must have completed the CQM for Contractors course. If the QC Manager does not have a current certification, obtain the CQM for Contractors course certification within 90 days of award. This course is periodically offered by the Naval Facilities Engineering Systems Command and the Army Corps of Engineers. Contact the Contracting Officer for information on the next scheduled class.

The Construction Quality Management Training certificate expires after 5 years. If the QC Manager's certificate has expired, retake the course to remain current.

1.6.3 Organizational Changes

Always maintain the QC staff with personnel as required by the specification section. When it is necessary to make changes to the QC staff, revise the CQC Plan to reflect the changes and submit the changes to the Contracting Officer for acceptance.

1.6.4 Alternate Quality Control (QC) Manager Duties and Qualifications

Designate an alternate for the QC Manager at the work site to serve in the event of the designated QC Manager's absence. The qualification requirements for the Alternate QC Manager must be the same as for the QC Manager.

1.7 SUBMITTAL AND DELIVERABLES REVIEW AND APPROVAL

Procedures for submission, review and approval of submittals are described in Section 01 33 00 SUBMITTAL PROCEDURES. Procedures must include field verification of relevant dimensions and component characteristics by the QC organization prior to submittal being sent to the Contracting Officer. The CQC organization is responsible for certifying that all submittals and deliverables are in compliance with the Contract.

1.8 THREE PHASES OF CONTROL

CQC enables the Contractor to ensure that the construction, including that of subcontractors and suppliers, complies with the requirements of the Contract. At least three phases of control must be conducted by the QC Manager to adequately cover both on-site and off-site work for each definable feature of the construction work as follows:

1.8.1 Preparatory Phase

Document the results of the preparatory phase actions by separate minutes prepared by the QC Manager and attach to the daily CQC report. Instruct applicable workers as to the acceptable level of workmanship required to meet Contract specifications.

Notify the Contracting Officer at least two business days in advance of each preparatory phase meeting. The meeting will be conducted by the QC Manager and attended by the Project Superintendent,and the foreman responsible for the DFOW. When the DFOW will be accomplished by a subcontractor, that subcontractor's foreman must attend the preparatory phase meeting. This phase is performed prior to beginning work on each definable feature of work, after all required plans/documents/materials are approved/accepted, and after copies are at the work site. Perform the following prior to beginning work on each DFOW:

a. Review each paragraph of the applicable specification sections, reference codes, and standards. Make available during the preparatory inspection a copy of those sections of referenced codes and standards applicable to that portion of the work to be accomplished in the field. Maintain and make available in the field for use by Government personnel until final acceptance of the work.

b. Review the Contract drawings.

c. Verify that field measurements are as indicated on construction or shop drawings or both before confirming product orders, to minimize waste due to excessive materials.

d. Verify that appropriate shop drawings and submittals for materials and equipment have been submitted and approved. Verify receipt of approved factory test results, when required.

e. Review the testing plan and ensure that provisions have been made to

provide the required QC testing.

f. Examine the work area to ensure that the required preliminary work has been completed and complies with the Contract and ensure any deficiencies/rework items in the preliminary work have been corrected and confirmed by the Contracting Officer.

g. Review coordination of product/material delivery to designated prepared areas to execute the work.

h. Examine the required materials, equipment and sample work to ensure that they are on hand and conform to the approved shop drawings and submitted data and are properly stored.

i. Check to assure that all materials and equipment have been tested, submitted, and approved.

j. Discuss specific controls to be used, construction methods, construction tolerances, workmanship standards, and the approach that will be used to provide quality construction by planning ahead and identifying potential problems for each DFOW. Ensure any portion of the plan requiring separate Contracting Officer acceptance has been approved.

k. Review the APP and appropriate Activity Hazard Analysis (AHA) to ensure that applicable safety requirements are met, and that required Safety Data Sheets (SDS) are submitted.

l. Discussion of procedures for controlling quality of the work including repetitive deficiencies. Document construction tolerances and workmanship standards for that feature of work.

m. Discuss schedule and execution of the initial control phase and confirmation or construction quality compliance.

1.8.2 Initial Phase

Notify the Contracting Officer at least two business days in advance of each initial phase. When construction crews are ready to start work on a DFOW, conduct the initial phase with the Project Superintendent, and the foreman responsible for that DFOW. Observe the initial segment of the DFOW to ensure that the work complies with Contract requirements. Document the results of the initial phase in the daily CQC Report and in the Initial Phase Checklist. Repeat the initial phase for each new crew to work on-site when acceptable levels of specified quality are not being met. Indicate the exact location of initial phase for definable feature of work for future reference and comparison with follow-up phases. Perform the following for each DFOW:

a. Check work to ensure that it is in full compliance with Contract requirements. Review minutes of the preparatory meeting.

b. Verify adequacy of controls to ensure full Contract compliance. Verify required control inspection and testing comply with the Contract.

c. Establish level of workmanship and verify that it meets the minimum acceptable workmanship standards. Compare with required sample panels as appropriate.

d. Resolve any workmanship issues.

e. Ensure that testing is performed by the approved laboratory.

f. Check work procedures for compliance with the APP and the appropriate AHA to ensure that applicable safety requirements are met.

g. Review project specific work plans (i.e., hazardous materials (HAZMAT) Abatement, Stormwater Management) to ensure all preparatory work items have been completed and documented.

1.8.3 Follow-Up Phase

Perform the following for on-going DFOW daily, or more frequently as necessary, until the completion of each DFOW. The Final Follow-Up for any DFOW will clearly note in the daily report the DFOW is completed, and all deficiencies/rework items have been completed in accordance with the paragraph DEFICIENCY/REWORK ITEMS LIST. Each DFOW that has completed the Initial Phase and has not completed the Final Follow-up must be included on each daily report. If no work was performed on that DFOW for the period of that daily report, it must be so noted. Document all Follow-Up activities for DFOWs in the daily CQC Report:

a. Ensure the work including control testing complies with Contract requirements until completion of that work feature. Record checks in the CQC documentation.

b. Maintain the quality of workmanship required.

c. Ensure that testing is performed by the approved laboratory.

d. Ensure that deficiencies/rework items are being corrected. Conduct final follow-up checks and correct all deficiencies prior to the start of additional features of work which may be affected by the deficient work.

e. Do not build upon nor conceal non-conforming work.

f. Assure manufacturers' representatives have performed necessary inspections if required and perform safety inspections.

1.8.4 Additional Preparatory and Initial Phases

Conduct additional preparatory and initial phases on the same DFOW if the quality of on-going work is unacceptable, if there are changes in the applicable QC organization, if there are changes in the on-site production supervision or work crew, if work on a DFOW has not started within 45 days of the initial preparatory meeting or has resumed after 45 days of inactivity, or if other problems develop.

1.8.5 Notification of Three Phases of Control for Off-Site Work

Notify the Contracting Officer at least two weeks prior to the start of the preparatory and initial phases.

1.8.6 Deficiency/Rework Items List

The QC Manager must maintain a list of work that does not comply with the

Contract, identifying what items need to be corrected, the activity ID number associated with the item, the date the item was originally discovered, the date the item will be corrected by, and the date the item was corrected.

The QC Manager reviews the list at each weekly QC Meeting:

a. There is no requirement to report a deficiency/rework item that is corrected the same day it is discovered.

b. No successor task may be advanced beyond the preparatory phase meeting until all deficiencies/rework items have been cleared by the QC Manager and concurred with by the Contracting Officer. This must be confirmed as part of the Preparatory Phase activities.

c. Attach a copy of the "Deficiency/Rework Items List" to the last daily CQC Report of each month.

d. The Contractor is responsible for including those items identified by the Contracting Officer.

e. All deficiencies/rework items must be confirmed as corrected by the QC Manager, and concurred by the Contracting Officer, prior to commencement of any completion inspections per paragraph COMPLETION INSPECTIONS unless specifically exempted by the Contracting Officer.

f. Non-Compliance with these requirements is grounds for removal in accordance with paragraph ACCEPTANCE OF THE QUALITY CONTROL (QC) PLAN.

g. All delays, concurrent or related to failure to manage, monitor, control, and correct deficiencies/rework items are entirely the responsibility of the Contractor and cannot be made the subject, or any component of any request for additional time or compensation.

1.9 TESTING

Perform specified or required tests to verify that control measures are adequate to provide a product which conforms to Contract requirements. Upon request, furnish to the Government duplicate samples of test specimens for possible testing by the Government. Testing includes operation and acceptance tests when specified. Procure the services of an U.S. Army Corps of Engineers approved testing laboratory or establish an approved testing laboratory at the project site or at a nearby location as approved by the COR. Perform the following activities and record and provide the following data:

a. Verify that testing procedures comply with Contract requirements.

b. Verify that facilities and testing equipment are available and comply with testing standards.

c. Check test instrument calibration data against certified standards.

d. Verify that recording forms and test identification control number system, including all test documentation requirements, have been prepared.

e. Record results of all tests taken, both passing and failing on the CQC report for the date taken. Specification paragraph reference,

location where tests were taken, and the sequential control number identifying the test. If approved by the Contracting Officer, actual test reports are submitted later with a reference to the test number and date taken. Provide an information copy of tests performed by an offsite or commercial test facility directly to the Contracting Officer. Failure to submit timely test reports as stated results in nonpayment for related work performed and disapproval of the test facility for this Contract.

1.9.1 Laboratory Accreditation Authorities

All testing laboratories must be validated by the USACE Material Testing Center (MTC) for the tests to be performed. Information on the USACE MTC with web-links to both a list of validated testing laboratories and for the laboratory inspection request for can be found at: https://mtc.erdc.dren.mil

1.9.2 Capability Check

The Contracting Officer retains the right to check laboratory equipment in the proposed laboratory and the laboratory technician's testing procedures, techniques, and other items pertinent to testing, for compliance with the standards set forth in this Contract. Laboratories utilized for testing soils, concrete, asphalt, and steel must meet criteria detailed in ASTM D3740 and ASTM E329.

1.9.2.1 Capability Recheck

If the selected laboratory fails the capability check, the Contractor will be assessed the actual cost of the recheck to reimburse the Government for each succeeding recheck of the laboratory or the checking of a subsequently selected laboratory. Such costs will be deducted from the Contract amount due the Contractor.

1.9.2.2 Onsite Laboratory

The Government reserves the right to utilize the Contractor's control testing laboratory and equipment to make assurance tests, and to check the Contractor's testing procedures, techniques, and test results at no additional cost to the Government.

1.9.3 Test Results

Cite applicable Contract requirements, tests or analytical procedures used. Provide actual results and include a statement that the item tested or analyzed conforms or fails to conform to specified requirements. If the item fails to conform, notify the Contracting Officer immediately. Conspicuously stamp the cover sheet for each report in large red letters "CONFORMS" or "DOES NOT CONFORM" to the specification requirements, whichever is applicable. Test results must be signed by a testing laboratory representative authorized to sign certified test reports. Furnish the signed reports, certifications, and other documentation to the Contracting Officer via the QC Manager.

1.10 COMPLETION INSPECTIONS

1.10.1 Punch-Out Inspection

Near the completion of all work or any increment thereof, established by a

completion time stated in the Contract Clause entitled "Commencement, Prosecution, and Completion of Work," or stated elsewhere in the specifications, the QC Manager must conduct an inspection of the work and develop a "punch list" of items which do not conform to the approved drawings, specifications, and Contract. Include in the punch list any remaining items on the "Deficiency/Rework Items List", that were not corrected prior to the Punch-Out Inspection as approved by the Contracting Officer in accordance with the paragraph DEFICIENCY/REWORK ITEMS LIST. Include within the punch list the estimated date by which the deficiencies will be corrected. Provide a copy of the punch list to the Contracting Officer.

The QC Manager, or staff, must make follow-on inspections to ascertain that all deficiencies have been corrected. All punch list items must be confirmed as corrected by the QC Manager and concurred by the Contracting Officer. Once this is accomplished, notify the Government that the facility is ready for the Government "Pre-Final Inspection".

1.10.2 Pre-Final Inspection

The Government and QC Manager will perform this inspection to verify that the facility is complete and ready to be occupied. A Government "Pre-Final Punch List" will be prepared by the QC Manager as part of this inspection. The QC Manager will ensure that all items on this list are corrected and verified by the Contracting Officer prior to notifying the Government that a "Final" inspection with the Client can be scheduled. All items noted on the "Pre-Final" inspection must be corrected and concurred by the Contracting Officer in a timely manner and be accomplished before the Contract completion date for the work, or any increment thereof, if the project is divided into increments by separate completion dates unless exceptions are directed by the Contracting Officer.

1.10.3 Final Acceptance Inspection

Notify the Contracting Officer at least 14 calendar days prior to the date a final acceptance inspection can be held. State within the notice that all items previously identified on the pre-final punch list will be corrected and acceptable, along with any other unfinished Contract work, by the date of the final acceptance inspection. The Contractor must be represented by the QC Manager, the Project Superintendent, and others deemed necessary. Attendees for the Government will include the Contracting Officer, other Government QA personnel, and personnel representing the Client. Failure of the Contractor to have all Contract work acceptably complete for this inspection will be cause for the Contracting Officer to bill the Contractor for the Government's additional inspection cost in accordance with the Contract Clause entitled "Inspection of Construction."

1.11 QUALITY CONTROL (QC) CERTIFICATIONS

1.11.1 Contractor Quality Control (CQC) Report Certification

Contain the following statement within the CQC Report: "On behalf of the Contractor, I certify that this report is complete and correct and equipment and material used, and work performed during this reporting period is in compliance with the Contract drawings and specifications to the best of my knowledge, except as noted in this report."

1.11.2 Completion Certification

Upon completion of work under this Contract, the QC Manager must furnish a certificate to the Contracting Officer attesting that "the work has been completed, inspected, tested and is in compliance with the Contract." Provide a copy of this final QC Certification for completion to the preparer of the Operation & Maintenance (O&M) documentation.

1.12 DOCUMENTATION AND INFORMATION FOR THE CONTRACTING OFFICER

Maintain current and complete records of on-site and off-site QC program operations and activities.

Contact the Contracting Officer for sample forms or print from Resident Management System - Quality Control System (RMS-QCS) as needed. Prior to commencing work on construction, the Contractor must obtain a copy set of the current report forms. The report forms will consist of the Contractor Quality Control (CQC) Report, CQC Report (Continuation Sheet), Contractor Production Report, Contractor Production Report (Continuation Sheet), Preparatory Phase Checklist, Initial Phase Checklist, Testing Plan and Log, and Rework Items List. Unless otherwise provided by the Contracting Officer, Contractor may use the forms provided as related material located at https://www.wbdg.org/dod/ufgs/ufgs-01-45-00.

1.12.1 Construction Documentation

Reports are required for each day that work is performed and must be attached to the Contractor Quality Control Report prepared for the same day. Maintain current and complete records of on-site and off-site QC program operations and activities. Reports are required for each day work is performed. Account for each calendar day throughout the life of the Contract.

The Project Superintendent and the QC Manager must prepare and sign the Contractor Production and CQC Reports, respectively. Every space on the forms must be filled in. Use N/A if nothing can be reported in one of the spaces. The reporting of work must be identified by terminology consistent with the construction schedule. In the "Remarks" sections of the reports, enter pertinent information including directions received, problems encountered during construction, work progress and delays, conflicts or errors in the drawings or specifications, field changes, safety hazards encountered, instructions given and corrective actions taken, delays encountered, a record of visitors to the work site, quality control problem areas, deviations from the QC Plan, construction deficiencies encountered, and meetings held. For each entry in the report(s), identify the Schedule Activity No. that is associated with the entered remark.

1.12.2 Quality Control Activities

CQC and Contractor Production reports will be prepared daily to maintain current records providing factual evidence that required quality control activities and tests have been performed. Include in these records the work of subcontractors and suppliers on an acceptable form that includes, as a minimum, the following information:

a. The name and area of responsibility of the Contractors and any subcontractors.

b. Operating plant/equipment with hours worked, idle, or down for repair.

c. Work performed each day, giving location, description, and by whom. When a Network Analysis Schedule (NAS) is used, identify each item of work performed each day by NAS activity number.

d. Control phase activities performed. Preparatory, and Initial phase Checklists associated with the DFOW referenced to the construction schedule. Follow-up phase activities identified to the DFOW. If testing or specific QC Specialist activities are associated with the Follow-up phase activities for a specific DFOW note this and include those reports.

e. Test and control activities performed with results and references to specifications and drawings requirements. Identify the control phase (Preparatory, Initial, Follow-up). List of deficiencies noted, along with corrective action in accordance with the paragraph DEFICIENCY/REWORK ITEMS LIST.

f. Quantity of materials received at the site with statement as to acceptability, storage, and reference to specifications and drawings requirements.

g. Submittals and deliverables reviewed, with Contract reference, by whom, and action taken.

h. Offsite surveillance activities, including actions taken.

i. Job safety evaluations stating what was checked, results, and instructions or corrective actions.

j. Instructions given/received and conflicts in plans and specifications.

1.12.3 Verification Statement

Indicate a description of trades working on the project; the number of personnel working; weather conditions encountered; and any delays encountered. Cover both conforming and deficient features and include a statement that equipment and materials incorporated in the work and workmanship comply with the Contract.

Furnish the original and one copy of these records in report form to the Government by 10:00 AM the next working day after the date covered by the report. As a minimum, prepare and submit one report for every seven days of no work and on the last day of a no work period. All calendar days need to be accounted for throughout the life of the Contract. The first report following a day of no work will be for that day only. Reports need to be signed and dated by the QC Manager. Include copies of test reports and copies of reports prepared by all subordinate quality control personnel within the QC Manager Report.

1.12.4 Quality Control Validation

Establish and maintain the following in an electronic folder. Divide folder into a series of tabbed sections as shown below. Ensure folder is updated at each required progress meeting.

a. CQC Meeting minutes in accordance with paragraph QUALITY CONTROL (QC) MEETINGS.

b. All completed Preparatory and Initial Phase Checklists, arranged by specification section, further sorted by DFOW referenced to the construction schedule. Submit each individual Phase Checklist the day the phase event occurs as part of the CQC daily report.

c. All milestone inspections, arranged by Activity Number referenced to the construction schedule.

d. An up-to-date copy of the Testing Plan and Log with supporting field test reports, arranged by specification section referenced to the DFOW to which individual reports results are associated. Individual field test reports will be submitted within two working days after the test is performed in accordance with the paragraph QUALITY CONTROL ACTIVITIES.

e. Copies of all Contract modifications, arranged in numerical order. Also include documentation that modified work was accomplished.

f. An up-to-date copy of the paragraph DEFICIENCY/REWORK ITEMS LIST.

g. Upon commencement of Completion Inspections of the entire project or any defined portion, maintain up-to-date copies of all punch lists issued by the QC staff to the Contractor and subcontractors and all punch lists issued by the Government in accordance with the paragraph COMPLETION INSPECTIONS.

1.12.5 Testing Plan and Log

As tests are performed, the QC Manager will record on the "Testing Plan and Log" the date the test was performed and the date the test results were forwarded to the Contracting Officer. Attach a copy of the updated "Testing Plan and Log" to the last daily CQC Report of each month. Provide a copy of the final "Testing Plan and Log" to the preparer of the Operation & Maintenance (O&M) documentation.

1.12.6 As-Built Drawings

The QC Manager must ensure the as-built drawings are kept current daily and marked to show deviations which have been made from the Contract drawings. The as-built drawings document commences with the QC Manager ensuring all amendments, or changes to the Contract prior to Contract award are accurately noted in the initial document set creating the accurate baseline of the Contract prior to any work starting. Ensure each deviation has been identified with the appropriate modifying documentation (e.g., PC No., Modification No., Request for Information No.). The QC Manager must initial each revision. Upon completion of work, the QC Manager will furnish a certificate attesting to the accuracy of the as-built drawings prior to submission to the Contracting Officer.

1.13 NOTIFICATION ON NON-COMPLIANCE

The Contracting Officer will notify the Contractor of any detected non-compliance with the Contract. Take immediate corrective action after receipt of such notice. Such notice, when delivered to the Contractor at the work site, is deemed sufficient for the purpose of notification. If the Contractor fails or refuses to comply promptly, the Contracting Officer may issue an order stopping all or part of the work until satisfactory corrective action has been taken. No part of the time lost

due to such stop orders will be made the subject of a claim for extension of time for excess costs or damages by the Contractor.

1.14 DELIVERY, STORAGE, AND HANDLING

Designate receiving/storage areas for incoming material to be delivered according to installation schedule and be placed conveniently in relation to the work area so as to minimize waste from excessive materials handling and misapplication. Store and handle materials in a manner as to prevent loss from weather and other damage. Keep materials, products, and accessories covered and off the ground, and store in a dry, secure area. Prevent contact with material that may cause corrosion, discoloration, or staining. Protect all materials and installations from damage by the activities of other trades.

PART 2 PRODUCTS

Not Used

PART 3 EXECUTION

Not Used

-- End of Section --

This page was intentionally left blank for duplex printing.

SECTION TABLE OF CONTENTS

DIVISION 01 - GENERAL REQUIREMENTS

SECTION 01 45 00.15 10

RESIDENT MANAGEMENT SYSTEM CONTRACTOR MODE (RMS CM)

PART 1 GENERAL

1.1 REFERENCES
1.2 MEASUREMENT AND PAYMENT
1.3 CONTRACT ADMINISTRATION
1.3.1 Correspondence and Electronic Communications
1.3.2 Other Factors
1.4 RMS SOFTWARE
1.5 CONTRACT DATABASE - GOVERNMENT
1.6 CONTRACT DATABASE - CONTRACTOR
1.6.1 Administration
1.6.1.1 Contractor Information
1.6.1.2 Subcontractor Information
1.6.1.3 Correspondence
1.6.1.4 Equipment
1.6.1.5 Reports
1.6.1.6 Request For Information (RFI)
1.6.2 Finances
1.6.2.1 Pay Activity Data
1.6.2.2 Payment Requests
1.6.3 Quality Control (QC)
1.6.3.1 Quality Control (QC) Reports
1.6.3.2 Deficiency Tracking.
1.6.3.3 Three-Phase Control Meetings
1.6.3.4 Labor and Equipment Hours
1.6.3.5 Accident/Safety Reporting
1.6.3.6 Definable Features of Work
1.6.3.7 Activity Hazard Analysis
1.6.4 Submittal Management
1.6.5 Schedule
1.6.6 Closeout
1.7 IMPLEMENTATION
1.8 NOTIFICATION OF NONCOMPLIANCE

PART 2 PRODUCTS

PART 3 EXECUTION

-- End of Section Table of Contents --

SECTION 01 45 00.15 10

RESIDENT MANAGEMENT SYSTEM CONTRACTOR MODE (RMS CM)

PART 1 GENERAL

1.1 REFERENCES

The publications listed below form a part of this section to the extent referenced. The publications are referred to within the text by the basic designation only.

U.S. ARMY CORPS OF ENGINEERS (USACE)

EM 385-1-1	(2024) Safety -- Safety and Occupational Health (SOH) Requirements

1.2 MEASUREMENT AND PAYMENT

The work of this section is not measured for payment. The Contractor is responsible for the work of this section, without any direct compensation other than the payment received for contract items.

1.3 CONTRACT ADMINISTRATION

The Government will use the Resident Management System (RMS) to assist in its monitoring and administration of this contract. The Government accesses the system using the Government Mode of RMS (RMS GM) and the Contractor accesses the system using the Contractor Mode (RMS CM). The term RMS will be used in the remainder of this section for both RMS GM and RMS CM. The joint Government-Contractor use of RMS facilitates electronic exchange of information and overall management of the contract. The Contractor accesses RMS to record, maintain, input, track, and electronically share information with the Government throughout the contract period in the following areas:

Administration
Finances
Quality Control
Submittal Monitoring
Scheduling
Closeout
Import/Export of Data

The Contractor must be prepared to transition from the Resident Management System (RMS) to the new Construction Management Platform (CMP) at any time during the period of performance of this contract, once the USACE enterprise implements this change. The Contractor's obligation to transition from RMS to the CMP system is a requirement of this contract. Therefore, additional time or cost increase to complete this transition will not be considered. In the event of the transition, RMS project information will be migrated to CMP by the government and available in the CMP system. After the transition, the Contractor must utilize the CMP system to perform all contract administration functions previously required in RMS, including all areas listed above. After the transition, “RMS” and “CMP” will be synonymous for all “Resident Management System”

and “RMS” references in this contract’s specification. To facilitate the transition from RMS to CMP, online training for the CMP system will be made available to the Contractor with enough time to train staff, prior to the transition occurring.

1.3.1 Correspondence and Electronic Communications

For ease and speed of communications, exchange correspondence and other documents in electronic format to the maximum extent feasible. Some documents may be required in paper format with original signatures. Paper documents will govern in the event of discrepancy with the electronic version. Contracting Officer will determine which documents require submission of paper copies.

1.3.2 Other Factors

Other portions of this document have a direct relationship to the reporting accomplished through RMS. Particular attention is directed to FAR 52.236-15 Schedules for Construction Contracts; FAR 52.232-27 Prompt Payment for Construction Contracts; FAR 52.232-5 Payments Under Fixed-Priced Construction Contracts; Section 01 32 01.00 10 PROJECT SCHEDULE; Section 01 33 00 SUBMITTAL PROCEDURES; Section 01 35 26 GOVERNMENTAL SAFETY REQUIREMENTS; and Section 01 45 00 QUALITY CONTROL.

1.4 RMS SOFTWARE

RMS is a web-based application. Download, install and be able to utilize the latest version of RMS within 7 calendar days of receipt of the Notice to Proceed. RMS software, user manuals, access and installation instructions, program updates and training information are available from the RMS website (https://rms.usace.army.mil). The Government and the Contractor will have different access authorities to the same contract database through RMS. The common database will be updated automatically each time a user finalizes an entry or change.

1.5 CONTRACT DATABASE - GOVERNMENT

The Government will enter the basic contract award data in RMS prior to granting the Contractor access. The Government entries into RMS will generally be related to submittal reviews, correspondence status, and Quality Assurance (QA) comments, as well as other miscellaneous administrative information.

1.6 CONTRACT DATABASE - CONTRACTOR

Contractor entries into RMS establish, maintain, and update data throughout the duration of the contract. Contractor entries generally include prime and subcontractor information, daily reports, submittals, RFI's, schedule updates and payment requests. RMS includes the ability to import attachments and export reports in many of the modules, including submittals. The Contractor responsibilities for entries in RMS typically include the following items:

1.6.1 Administration

1.6.1.1 Contractor Information

Enter all current Contractor administrative data and information into RMS within 7 calendar days of receiving access to the contract in RMS. This

includes, but is not limited to, Contractor's name, address, telephone numbers, management staff, and other required items.

1.6.1.2 Subcontractor Information

Enter all missing subcontractor administrative data and information into RMS CM within seven calendar days of receiving access to the Contract in RMS or within seven calendar days of the signing of the subcontractor agreement for agreements signed at a later date. This includes name, trade, address, phone numbers, and other required information for all subcontractors. A subcontractor is listed separately for each trade to be performed.

1.6.1.3 Correspondence

Identify all Contractor correspondence to the Government with a serial number. Prefix correspondence initiated by the Contractor's site office with "S". Prefix letters initiated by the Contractor's home (main) office with "H". Letters are numbered starting from 0001. (e.g., H-0001 or S-0001). The Government's letters to the Contractor will be prefixed with "C" or "RFP".

1.6.1.4 Equipment

Enter and maintain a current list of equipment planned for use or being used on the jobsite, including the most recent and planned equipment inspection dates in accordance with Section 01 45 00 QUALITY CONTROL.

1.6.1.5 Reports

Track the status of the project using the reports available in RMS. The value of these reports reflects the quality of the data input. These reports include but are not limited to the Progress Payment Request worksheet, Quality Control (QC) comments, Deficiency Tracking Log, Submittal Register Status, and Three-Phase Control worksheets in accordance with Sections 01 32 01.00 10 PROJECT SCHEDULE, 01 33 00 SUBMITTAL PROCEDURES, and 01 45 00 QUALITY CONTROL.

1.6.1.6 Request For Information (RFI)

Create and track all Requests For Information (RFI) in the RMS Administration Module for Government review and response. Provide status at weekly progress meeting in accordance with Section 01 32 01.00 10 PROJECT SCHEDULE.

1.6.2 Finances

1.6.2.1 Pay Activity Data

Develop and enter a list of pay activities in conjunction with the project schedule in accordance with Section 01 32 01.00 10 PROJECT SCHEDULE. The sum of pay activities equals the total Contract amount, including modifications. Each pay activity must be assigned to a Contract Line Item Number (CLIN). The sum of the activities assigned to a CLIN equals the amount of each CLIN.

1.6.2.2 Payment Requests

Prepare all progress payment requests using RMS. Update the work

completed under the Contract at least monthly, measured as percent or as specific quantities. After the update, generate a payment request and prompt payment certification using RMS. Submit the signed prompt payment certification and payment request as well as supporting data, either electronically or by hard copy.

1.6.3 Quality Control (QC)

Enter and track implementation of the 3-phase QC Control System, QC testing, transferred and installed property and warranties in RMS. Prepare daily reports, identify and track deficiencies, document progress of work, and support other Contractor QC requirements in RMS. Maintain all data daily. Ensure that RMS reflects all quality control methods, tests and actions contained within the Contractor Quality Control (CQC) Plan and Government review comments. Provide within seven calendar days of Government acceptance of the CQC Plan.

1.6.3.1 Quality Control (QC) Reports

The Contractor's Quality Control (QC) Daily Report in RMS is the official report. The Contractor can use other supplemental formats to record QC data, but information from any supplemental formats is to be consolidated and entered into the RMS QC Daily Report. Any supplemental information may be entered into RMS as an attachment to the report. QC Daily Reports must be finalized and signed in RMS within 24 hours after the date covered by the report.

1.6.3.2 Deficiency Tracking.

Use the QC Daily Report Module to enter and track deficiencies. Deficiencies identified and entered into RMS by the Contractor or the Government will be sequentially numbered with a QC or QA prefix for tracking purposes. Enter each deficiency into RMS the same day that the deficiency is identified. Monitor, track and resolve all QC and QA entered deficiencies. A deficiency is not considered to be corrected until the Government indicates concurrence in RMS.

1.6.3.3 Three-Phase Control Meetings

Maintain scheduled and actual dates and times of preparatory and initial control meetings in RMS, and upload meeting minutes of the meetings. Worksheets for the three-phase control meetings are generated within RMS.

1.6.3.4 Labor and Equipment Hours

Enter labor and equipment exposure hours daily. Roll up the labor and equipment exposure data into a monthly exposure report.

1.6.3.5 Accident/Safety Reporting

Both the Contractor and the Government enter safety related comments in RMS as a deficiency. The Contractor must monitor, track and show resolution for safety issues in the QC Daily Report area of the RMS QC Module. In addition, follow all reporting requirements for accidents and incidents as required in EM 385-1-1, Section 01 35 26 GOVERNMENTAL SAFETY REQUIREMENTS and as required by any other applicable Federal, State or local agencies.

1.6.3.6 Definable Features of Work

Enter each feature of work, as defined in the approved CQC Plan, into the RMS QC Module. A feature of work may be associated with a single or multiple pay activities, however a pay activity is only to be linked to a single feature of work.

1.6.3.7 Activity Hazard Analysis

Import activity hazard analysis electronic document files into the RMS QC Module utilizing the document package manager. Prepare activity hazard analysis in accordance with Section 01 35 26 GOVERNMENT SAFETY REQUIREMENTS.

1.6.4 Submittal Management

Enter all current submittal register data and information into RMS within seven calendar days of receiving access to the Contract in RMS. Contractor is responsible for entering Activity Numbers for each submittal item corresponding to their Schedule. Group electronic submittal documents into transmittal packages to send to the Government, except very large electronic files, samples, spare parts, mockups, color boards, or where hard copies are specifically required. Track transmittals and update the submittal register in RMS on a daily basis throughout the duration of the Contract.

Contractor may request submittals to be added to RMS throughout the lifecycle of the project. Approval/disapproval of Contractor requests is at the discretion of the Contracting Officer. Submittals entry into RMS must be updated daily or as practical for performance of the Contract, as approved by the Contracting Officer.

1.6.5 Schedule

Develop a construction schedule consisting of pay activities, in accordance with Section 01 32 01.00 10 PROJECT SCHEDULE. Enter and update the contract project schedule in RMS by either manually entering all schedule data or by importing the Standard Data Exchange Format (SDEF) file. Include with each pay request the updated schedule. Provide electronic copies of transmittals.

1.6.6 Closeout

Closeout documents, processes and forms are managed and tracked in RMS by both the Contractor and the Government. Ensure that all closeout documents are entered, completed and documented within RMS.

1.7 IMPLEMENTATION

Use of RMS as described in the preceding paragraphs is mandatory. Ensure that sufficient resources are available to maintain contract data within the RMS system. RMS is an integral part of the Contractor's required management of quality control.

1.8 NOTIFICATION OF NONCOMPLIANCE

Take corrective action within seven calendar days after receipt of notice of RMS non-compliance by the Contracting Officer.

PART 2 PRODUCTS

Not Used

PART 3 EXECUTION

Not Used

-- End of Section --

This page was intentionally left blank for duplex printing.

SECTION TABLE OF CONTENTS

DIVISION 01 - GENERAL REQUIREMENTS

SECTION 01 57 20.00 10

ENVIRONMENTAL PROTECTION

PART 1 GENERAL

1.1 REFERENCES
1.2 DEFINITIONS
1.2.1 Environmental Pollution and Damage
1.2.2 Environmental Protection
1.2.3 Contractor Generated Hazardous Waste
1.2.4 Land Application for Discharge Water
1.2.5 Pests
1.2.6 Pesticide
1.2.7 Project Pesticide Coordinator
1.2.8 Surface Discharge
1.2.9 Waters of the United States
1.2.10 Wetlands
1.3 GENERAL REQUIREMENTS
1.4 SUBCONTRACTORS
1.5 PAYMENT
1.6 SUBMITTALS
1.7 ENVIRONMENTAL COORDINATION, PERMITS, NOTICES, REVIEWS AND/OR APPROVALS
1.7.1 PERMITS, NOTICES, REVIEWS, AND/OR APPROVALS
1.7.1.1 NPDES Permit for South Dakota Construction Activities
1.8 ENVIRONMENTAL PROTECTION PLAN
1.8.1 Compliance
1.8.2 Contents
1.8.3 Appendix
1.9 PROTECTION FEATURES
1.10 ENVIRONMENTAL ASSESSMENT OF CONTRACT DEVIATIONS
1.11 NOTIFICATION

PART 2 PRODUCTS (NOT USED)

PART 3 EXECUTION

3.1 LAND RESOURCES
3.1.1 Work Area Limits
3.1.2 Landscape
3.1.3 Erosion and Sediment Controls
3.1.4 Contractor Facilities and Work Areas
3.2 WATER RESOURCES
3.2.1 Wetlands
3.3 AIR RESOURCES
3.3.1 Particulates
3.3.2 Odors
3.3.3 Sound Intrusions

3.3.4 Burning
3.4 CHEMICAL MATERIALS MANAGEMENT AND WASTE DISPOSAL
3.4.1 Solid Wastes
3.4.2 Chemicals and Chemical Wastes
3.4.3 Contractor Generated Hazardous Wastes/Excess Hazardous Materials
3.4.4 Fuel and Lubricants
3.4.5 Waste Water
3.5 RECYCLING AND WASTE MINIMIZATION
3.6 NON-HAZARDOUS SOLID WASTE DIVERSION REPORT
3.7 HISTORICAL, ARCHAEOLOGICAL, AND CULTURAL RESOURCES
3.8 BIOLOGICAL RESOURCES
3.8.1 Endangered/Threatened Species
3.8.1.1 Interior Least Terns and/or Piping Plovers
3.8.1.2 Bald Eagles
3.8.2 Migratory Bird Treaty Act
3.9 INTEGRATED PEST MANAGEMENT
3.9.1 Pesticide Delivery and Storage
3.9.2 Qualifications
3.9.3 Pesticide Handling Requirements
3.9.4 Application
3.10 PREVIOUSLY USED EQUIPMENT
3.11 MAINTENANCE OF POLLUTION FACILITIES
3.12 TRAINING OF CONTRACTOR PERSONNEL
3.13 POST PERFORMANCE CLEANUP

-- End of Section Table of Contents --

SECTION 01 57 20.00 10

ENVIRONMENTAL PROTECTION

PART 1 GENERAL

1.1 REFERENCES

The publications listed below form a part of this specification to the extent referenced. The publications are referred to within the text by the basic designation only.

U.S. ARMY CORPS OF ENGINEERS (USACE)

EM 385-1-1	(2024) Safety -- Safety and Occupational Health (SOH) Requirements
WETLAND MANUAL	Corps of Engineers Wetlands Delineation Manual Technical Report Y-87-1

U.S. NATIONAL ARCHIVES AND RECORDS ADMINISTRATION (NARA)

33 CFR 328	Definitions of Waters of the United States
40 CFR 150 - 189	Pesticide Programs
40 CFR 261	Identification and Listing of Hazardous Waste
40 CFR 262	Standards Applicable to Generators of Hazardous Waste
40 CFR 279	Standards for the Management of Used Oil
40 CFR 302	Designation, Reportable Quantities, and Notification
40 CFR 355	Emergency Planning and Notification
40 CFR 68	Chemical Accident Prevention Provisions
49 CFR 171 - 178	Hazardous Materials Regulations

1.2 DEFINITIONS

1.2.1 Environmental Pollution and Damage

Environmental pollution and damage is the presence of chemical, physical, or biological elements or agents which adversely affect human health or welfare; unfavorably alter ecological balances of importance to human life; affect other species of importance to humankind; or degrade the environment aesthetically, culturally and/or historically.

1.2.2 Environmental Protection

Environmental protection is the prevention/control of pollution and habitat disruption that may occur to the environment during construction. The control of environmental pollution and damage requires consideration of land, water, and air; biological and cultural resources; and includes management of visual aesthetics; noise; solid, chemical, gaseous, and liquid waste; radiant energy and radioactive material as well as other pollutants.

1.2.3 Contractor Generated Hazardous Waste

Contractor generated hazardous waste means materials that, if abandoned or disposed of, may meet the definition of a hazardous waste. These waste streams would typically consist of material brought on site by the Contractor to execute work, but are not fully consumed during the course of construction. Examples include, but are not limited to, excess paint thinners (i.e. methyl ethyl ketone, toluene etc.), waste thinners, excess paints, excess solvents, waste solvents, and excess pesticides, and contaminated pesticide equipment rinse water.

1.2.4 Land Application for Discharge Water

The term "Land Application" for discharge water implies that the Contractor must discharge water at a rate which allows the water to percolate into the soil. No sheeting action, soil erosion, discharge into storm sewers, discharge into defined drainage areas, or discharge into the "waters of the United States" must occur. Land Application must be in compliance with all applicable Federal, State, and local laws and regulations.

1.2.5 Pests

The term "pests" means arthropods, birds, rodents, nematodes, fungi, bacteria, viruses, algae, snails, marine borers, snakes, weeds and other organisms (except for human or animal disease-causing organisms) that adversely affect readiness, military operations, or the well-being of personnel and animals; attack or damage real property, supplies, equipment, or vegetation; or are otherwise undesirable.

1.2.6 Pesticide

Pesticide is defined as any substance or mixture of substances intended for preventing, destroying, repelling, or mitigating any pest, or intended for use as a plant regulator, defoliant or desiccant.

1.2.7 Project Pesticide Coordinator

The Project Pesticide Coordinator (PPC) is an individual that resides at a Civil Works Project office and that is responsible for oversight of pesticide application on Project grounds.

1.2.8 Surface Discharge

The term "Surface Discharge" implies that the water is discharged with possible sheeting action and subsequent soil erosion may occur. Waters that are surface discharged may terminate in drainage ditches, storm sewers, creeks, and/or "waters of the United States" and would require a

permit to discharge water from the governing agency.

1.2.9 Waters of the United States

All waters which are under the jurisdiction of the Clean Water Act, as defined in 33 CFR 328.

1.2.10 Wetlands

Those areas that are inundated or saturated by surface or groundwater at a frequency and duration sufficient to support, and that under normal circumstances do support, a prevalence of vegetation typically adapted for life in saturated soil conditions. Wetlands generally include swamps, marshes, and bogs. Official determination of whether or not an area is classified as a wetland must be done in accordance with WETLAND MANUAL.

1.3 GENERAL REQUIREMENTS

Minimize environmental pollution and damage that may occur as the result of construction operations. The environmental resources within the project boundaries and those affected outside the limits of permanent work must be protected during the entire duration of this contract. Comply with all applicable environmental Federal, State, and local laws and regulations. Any delays resulting from failure to comply with environmental laws and regulations will be the Contractor's responsibility.

1.4 SUBCONTRACTORS

Ensure compliance with this section by subcontractors.

1.5 PAYMENT

No separate payment will be made for work covered under this section. Payment of fees associated with environmental permits, application, and/or notices obtained by the Contractor, and payment of all fines/fees for violation or non-compliance with Federal, State, Regional and local laws and regulations are the Contractor's responsibility. All costs associated with this section must be included in the contract price.

1.6 SUBMITTALS

Government approval is required for submittals with a "G" designation; submittals not having a "G" designation are for information only. When used, a designation following the "G" designation identifies the office that will review the submittal for the Government. Submit the following in accordance with Section 01 33 00 SUBMITTAL PROCEDURES:

SD-01 Preconstruction Submittals

Environmental Protection Plan; G, AO

The environmental protection plan.

1.7 ENVIRONMENTAL COORDINATION, PERMITS, NOTICES, REVIEWS AND/OR APPROVALS

The Contractor shall be responsible for contacting the appropriate Federal, State, Regional, and local environmental agencies to identify all required environmental permits (construction and operating), notices, reviews, and approvals required for the project. Once the requirements

are identified, the Contractor shall be responsible for coordinating the requirements with the Contracting Officer in regard to implementation for the project. The Contractor shall ensure that all coordination, permits, notices, reviews and/or approvals are completed and submitted with each applicable phase of the design. Prior to construction starting for any phase, the Contractor shall assure that all permits and/or approvals are received and copies are submitted to the Contracting Officer. The Contractor shall be responsible for any contract delays resulting from failure to obtain environmental permits, notices, reviews and/or approvals when required.

1.7.1 PERMITS, NOTICES, REVIEWS, AND/OR APPROVALS

The following is a listing of permits, notices, reviews, and/or approvals which **may be** required for this project. This listing and requirements are not to be considered all-inclusive by the Contractor, but is provided as information that may be used in successfully accomplishing the environmental compliances.

1.7.1.1 NPDES Permit for South Dakota Construction Activities

If construction activities results in disturbance of 1 acre of land or more (sites that may be smaller than 1 acre but are part of common plan of development are considered to be over 1 acre), coverage under the State of South Dakota Department of Agriculture and Natural Resources' (SDDANR), Authorization to Discharge Under the Surface Water Discharge System Permit #SDR100000 is required. If the current permit is revised by the State of South Dakota to requiring the permit for a project disturbing less than 1 acre, the Contractor shall be responsible for the applying for coverage under the permit. The Contractor shall be responsible for implementing the terms and requirements of the permit and shall be considered the "permittee". The Contractor shall complete and submit a Notice of Intent (NOI) and the Notice of Termination (NOT)in accordance with Permit #SDR100000 and shall be considered the "Facility Operator". The Contractor shall not begin construction until an authorization letter from the State granting coverage for the storm water discharges is received. The Contractor shall be responsible for posting a copy of the NOI and the authorization letter at the construction site in a prominent place for public viewing. The Contractor shall prepare and implement a Storm Water Pollution Prevention Plan, inspections, and reporting in accordance with the SD#100000. Any temporary or permanent erosion and sedimentation control measures shown on the drawings shall be incorporated into the Contractor's Storm Water Pollution Prevention Plan. The Contractor shall be responsible for assuring that their SWPPP is in accordance with Best Management Practices. The Contractor shall retain copies of the storm water pollution prevention plan and all reports in accordance with the permit. All submissions to the State shall be by certified mail. The Contractor shall include copies of all submittals to the State of South Dakota, plans, and reports in the Appendix to the Environmental Protection Plan.

1.8 ENVIRONMENTAL PROTECTION PLAN

Prior to commencing construction activities or delivery of materials to the site, submit an Environmental Protection Plan for review and approval by the Contracting Officer. The purpose of the Environmental Protection Plan is to present a comprehensive overview of known or potential environmental issues which the Contractor must address during construction. Issues of concern must be defined within the Environmental Protection Plan

as outlined in this section. Address each topic at a level of detail commensurate with the environmental issue and required construction task(s). Topics or issues which are not identified in this section, but are considered necessary, must be identified and discussed after those items formally identified in this section. Prior to submittal of the Environmental Protection Plan, meet with the Contracting Officer for the purpose of discussing the implementation of the initial Environmental Protection Plan; possible subsequent additions and revisions to the plan including any reporting requirements; and methods for administration of the Contractor's Environmental Plans. The Environmental Protection Plan must be current and maintained onsite by the Contractor.

1.8.1 Compliance

No requirement in this Section will relieve the Contractor of any applicable Federal, State, and local environmental protection laws and regulations. During Construction, the Contractor will be responsible for identifying, implementing, and submitting for approval any additional requirements to be included in the Environmental Protection Plan.

1.8.2 Contents

Include in the environmental protection plan, but not limit it to, the following:

a. Name(s) of person(s) within the Contractor's organization who is(are) responsible for ensuring adherence to the Environmental Protection Plan.

b. Name(s) and qualifications of person(s) responsible for manifesting hazardous waste to be removed from the site, if applicable.

c. Name(s) and qualifications of person(s) responsible for training the Contractor's environmental protection personnel.

d. Description of the Contractor's environmental protection personnel training program.

e. An erosion and sediment control plan which identifies the type and location of the erosion and sediment controls to be provided. The plan must include monitoring and reporting requirements to assure that the control measures are in compliance with the erosion and sediment control plan, Federal, State, and local laws and regulations. A Storm Water Pollution Prevention Plan (SWPPP) may be substituted for this plan.

f. Drawings showing locations of proposed temporary excavations or embankments for haul roads, stream crossings, material storage areas, structures, sanitary facilities, and stockpiles of excess or spoil materials including methods to control runoff and to contain materials on the site.

g. Traffic control plans including measures to reduce erosion of temporary roadbeds by construction traffic, especially during wet weather. Plan shall include measures to minimize the amount of mud transported onto paved public roads by vehicles or runoff.

h. Work area plan showing the proposed activity in each portion of the area and identifying the areas of limited use or nonuse. Plan should

include measures for marking the limits of use areas including methods for protection of features to be preserved within authorized work areas.

i. Drawing showing the location of borrow areas.

j. Include in the Spill Control plan the procedures, instructions, and reports to be used in the event of an unforeseen spill of a substance regulated by 40 CFR 68, 40 CFR 302, 40 CFR 355, and/or regulated under State or Local laws and regulations. The Spill Control Plan supplements the requirements of EM 385-1-1. Include in this plan, as a minimum:

(1) The name of the individual who will report any spills or hazardous substance releases and who will follow up with complete documentation. This individual will immediately notify the Contracting Officer and the local Fire Department in addition to the legally required Federal, State, and local reporting channels (including the National Response Center 1-800-424-8802) if a reportable quantity is released to the environment. Include in the plan a list of the required reporting channels and telephone numbers.

(2) The name and qualifications of the individual who will be responsible for implementing and supervising the containment and cleanup.

(3) Training requirements for Contractor's personnel and methods of accomplishing the training.

(4) A list of materials and equipment to be immediately available at the job site, tailored to cleanup work of the potential hazard(s) identified.

(5) The names and locations of suppliers of containment materials and locations of additional fuel oil recovery, cleanup, restoration, and material-placement equipment available in case of an unforeseen spill emergency.

(6) The methods and procedures to be used for expeditious contaminant cleanup.

k. A non-hazardous solid waste disposal plan identifying methods and locations for solid waste disposal including clearing debris and schedules for disposal.

(1) Identify any subcontractors responsible for the transportation and disposal of solid waste. Submit licenses or permits for solid waste disposal sites that are not a commercial operating facility.

(2) Evidence of the disposal facility's acceptance of the solid waste must be attached to this plan during the construction. Attach a copy of each of the Non-hazardous Solid Waste Diversion Reports to the disposal plan. Submit the report for the previous quarter on the first working day after the first quarter that non-hazardous solid waste has been disposed and/or diverted (e.g. the first working day of January, April, July, and October).

(3) Indicate in the report the total amount of waste generated and total amount of waste diverted in cubic yards or tons along with the percent that was diverted.

(4) A recycling and solid waste minimization plan with a list of measures to reduce consumption of energy and natural resources. Detail in the plan the Contractor's actions to comply with and to participate in Federal, State, Regional, and local government sponsored recycling programs to reduce the volume of solid waste at the source.

l. An air pollution control plan detailing provisions to assure that dust, debris, materials, trash, etc., do not become air borne and travel off the project site.

m. A contaminant prevention plan that: identifies potentially hazardous substances to be used on the job site; identifies the intended actions to prevent introduction of such materials into the air, water, or ground; and details provisions for compliance with Federal, State, and local laws and regulations for storage and handling of these materials. In accordance with EM 385-1-1, a copy of the Safety Data Sheets (SDS) and the maximum quantity of each hazardous material to be onsite at any given time must be included in the contaminant prevention plan. Update the plan as new hazardous materials are brought onsite or removed from the site.

n. A waste water management plan that identifies the methods and procedures for management and/or discharge of waste waters which are directly derived from construction activities, such as concrete curing water, clean-up water, dewatering of groundwater, disinfection water, hydrostatic test water, and water used in flushing of lines. If a settling/retention pond is required, the plan must include the design of the pond including drawings, removal plan, and testing requirements for possible pollutants. If land application will be the method of disposal for the waste water, the plan must include a sketch showing the location for land application along with a description of the pretreatment methods to be implemented. If surface discharge will be the method of disposal, include a copy of the permit and associated documents as an attachment prior to discharging the waste water. If disposal is to a sanitary sewer, the plan must include documentation that the Waste Water Treatment Plant Operator has approved the flow rate, volume, and type of discharge.

o. A historical, archaeological, cultural resources biological resources and wetlands plan that defines procedures for identifying and protecting historical, archaeological, cultural resources, biological resources and wetlands known to be on the project site: and/or identifies procedures to be followed if historical archaeological, cultural resources, biological resources and wetlands not previously known to be onsite or in the area are discovered during construction. Include in the plan methods to assure the protection of known or discovered resources, identifying lines of communication between Contractor personnel and the Contracting Officer.

p. Include and update a pesticide treatment plan, as information becomes available. Include in the plan: sequence of treatment, dates, times, locations, pesticide trade name, EPA registration numbers, authorized uses, chemical composition, formulation, original and applied concentration, application rates of active ingredient (i.e. pounds of

active ingredient applied), equipment used for application and calibration of equipment. Federal, State, Regional and Local pest management record keeping and reporting requirements as well as any additional project specific requirements are the Contractor's responsibility.

1.8.3 Appendix

Attach to the Environmental Protection Plan, as an appendix, copies of all environmental permits, permit application packages, approvals to construct, notifications, certifications, reports, and termination documents.

1.9 PROTECTION FEATURES

This paragraph supplements the Contract Clause PROTECTION OF EXISTING VEGETATION, STRUCTURES, EQUIPMENT, UTILITIES, AND IMPROVEMENTS. Prior to start of any onsite construction activities, the Contractor and the Contracting Officer will make a joint condition survey. Immediately following the survey, the Contractor will prepare a brief report including a plan describing the features requiring protection under the provisions of the Contract Clauses, which are not specifically identified on the drawings as environmental features requiring protection along with the condition of trees, shrubs and grassed areas immediately adjacent to the site of work and adjacent to the Contractor's assigned storage area and access route(s), as applicable. This survey report will be signed by both the Contractor and the Contracting Officer upon mutual agreement as to its accuracy and completeness. The Contractor must protect those environmental features included in the survey report and any indicated on the drawings, regardless of interference which their preservation may cause to the work under the contract.

1.10 ENVIRONMENTAL ASSESSMENT OF CONTRACT DEVIATIONS

Any deviations from the drawings, plans and specifications, requested by the Contractor and which may have an environmental impact, will be subject to approval by the Contracting Officer and may require an extended review, processing, and approval time. The Contracting Officer reserves the right to disapprove alternate methods, even if they are more cost effective, if the Contracting Officer determines that the proposed alternate method will have an adverse environmental impact.

1.11 NOTIFICATION

The Contracting Officer will notify the Contractor in writing of any observed noncompliance with Federal, State or local environmental laws or regulations, permits, and other elements of the Contractor's Environmental Protection plan. After receipt of such notice, the Contractor will inform the Contracting Officer of the proposed corrective action and take such action when approved by the Contracting Officer. The Contracting Officer may issue an order stopping all or part of the work until satisfactory corrective action has been taken. No time extensions will be granted or equitable adjustments allowed for any such suspensions. This is in addition to any other actions the Contracting Officer may take under the contract, or in accordance with the Federal Acquisition Regulation or Federal Law.

PART 2 PRODUCTS (NOT USED)

PART 3 EXECUTION

3.1 LAND RESOURCES

Confine all activities to areas defined by the drawings and specifications. Identify any land resources to be preserved within the work area prior to the beginning of any construction. Do not remove, cut, deface, injure, or destroy land resources including trees, shrubs, vines, grasses, topsoil, and land forms without approval, except in areas indicated on the drawings or specified to be cleared. Ropes, cables, or guys will not be fastened to or attached to any trees for anchorage unless specifically authorized. Provide effective protection for land and vegetation resources at all times, as defined in the following subparagraphs. Remove stone, soil, or other materials displaced into uncleared areas.

3.1.1 Work Area Limits

Mark the areas that need not be disturbed under this contract prior to commencing construction activities. Mark or fence isolated areas within the general work area which are not to be disturbed. Protect monuments and markers before construction operations commence. Where construction operations are to be conducted during darkness, any markers must be visible in the dark. The Contractor's personnel must be knowledgeable of the purpose for marking and/or protecting particular objects.

3.1.2 Landscape

Trees, shrubs, vines, grasses, land forms and other landscape features indicated and defined on the drawings to be preserved must be clearly identified by marking, fencing, or wrapping with boards, or any other approved techniques. Restore landscape features damaged or destroyed during construction operations outside the limits of the approved work area.

3.1.3 Erosion and Sediment Controls

Providing erosion and sediment control measures in accordance with Federal, State, and local laws and regulations is the Contractor's responsibility. The erosion and sediment controls selected and maintained by the Contractor shall be such that water quality standards are not violated as a result of construction activities. The area of bare soil exposed at any one time by construction operations should be kept to a minimum. Construct or install temporary and permanent erosion and sediment control best management practices (BMPs) as specified in Section 01 57 23 TEMPORARY STORM WATER POLLUTION CONTROL. BMPs may include, but not be limited to, vegetation cover, stream bank stabilization, slope stabilization, silt fences, construction of terraces, interceptor channels, sediment traps, inlet and outfall protection, diversion channels, and sedimentation basins.as specified in Section 01 57 23 TEMPORARY STORM WATER POLLUTION CONTROL Remove any temporary measures after the area has been stabilized.

3.1.4 Contractor Facilities and Work Areas

Place field offices, staging areas, stockpile storage, and temporary buildings in areas designated on the drawings or as directed by the

Contracting Officer. Temporary movement or relocation of Contractor facilities will be made only when approved. Erosion and sediment controls must be provided for onsite borrow and spoil areas to prevent sediment from entering nearby waters. Temporary excavation and embankments for plant and/or work areas must be controlled to protect adjacent areas.

3.2 WATER RESOURCES

Monitor all water areas affected by construction activities to prevent pollution of surface water and groundwater. Do not apply toxic or hazardous chemicals to soil or vegetation unless otherwise indicated. For construction activities immediately adjacent to impaired surface waters, the Contractor must be capable of quantifying sediment or pollutant loading to that surface water when required by State or Federally issued Clean Water Act permits.

3.2.1 Wetlands

D0 not enter, disturb, destroy, or allow discharge of contaminants into any wetlands.

3.3 AIR RESOURCES

Equipment operation, activities, or processes will be in accordance with all Federal and State air emission and performance laws and standards.

3.3.1 Particulates

Dust particles; aerosols and gaseous by-products from construction activities; and processing and preparation of materials, such as from asphaltic batch plants; must be controlled at all times, including weekends, holidays and hours when work is not in progress. Maintain excavations, stockpiles, haul roads, permanent and temporary access roads, plant sites, spoil areas, borrow areas, and other work areas within or outside the project boundaries free from particulates which would cause the Federal, State, and local air pollution standards to be exceeded or which would cause a hazard or a nuisance. Sprinkling, chemical treatment of an approved type, baghouse, scrubbers, electrostatic precipitators or other methods will be permitted to control particulates in the work area. Sprinkling, to be efficient, must be repeated to keep the disturbed area damp at all times. Provide sufficient, competent equipment available to accomplish these tasks. Perform particulate control as the work proceeds and whenever a particulate nuisance or hazard occurs. Comply with all State and local visibility regulations.

3.3.2 Odors

Odors from construction activities must be controlled at all times. The odors must be in compliance with State regulations and/or local ordinances and may not constitute a health hazard.

3.3.3 Sound Intrusions

Keep construction activities under surveillance and control to minimize environment damage by noise. Comply with State regulations and/or local ordinances pertaining to noise.

3.3.4 Burning

Burning is prohibited on the Government premises.

3.4 CHEMICAL MATERIALS MANAGEMENT AND WASTE DISPOSAL

Disposal of wastes will be as directed below, unless otherwise specified in other sections and/or shown on the drawings.

3.4.1 Solid Wastes

Place solid wastes (excluding clearing debris) in containers which are emptied on a regular schedule. Handling, storage, and disposal must be conducted to prevent contamination. Employ segregation measures so that no hazardous or toxic waste will become co-mingled with solid waste. Transport solid waste off Government property and dispose of it in compliance with Federal, State, and local requirements for solid waste disposal. A Subtitle D RCRA permitted landfill will be the minimum acceptable offsite solid waste disposal option. Verify that the selected transporters and disposal facilities have the necessary permits and licenses to operate. Comply with Federal, State, and local laws and regulations pertaining to the use of landfill areas.

3.4.2 Chemicals and Chemical Wastes

Dispense chemicals ensuring no spillage to the ground or water. Perform and document periodic inspections of dispensing areas to identify leakage and initiate corrective action. This documentation will be periodically reviewed by the Government. Collect chemical waste in corrosion resistant, compatible containers. Collection drums must be monitored and removed to a staging or storage area when contents are within 6 inches of the top. Wastes will be classified, managed, stored, and disposed of in accordance with Federal, State, and local laws and regulations.

3.4.3 Contractor Generated Hazardous Wastes/Excess Hazardous Materials

Hazardous wastes are defined in 40 CFR 261, or are as defined by applicable State and local regulations. Hazardous materials are defined in 49 CFR 171 - 178. At a minimum, manage and store hazardous waste in compliance with 40 CFR 262 in accordance with the Project Office hazardous waste management plan. Take sufficient measures to prevent spillage of hazardous and toxic materials during dispensing. Segregate hazardous waste from other materials and wastes, protect it from the weather by placing it in a safe covered location, and take precautionary measures such as berming or other appropriate measures against accidental spillage. Storage, describing, packaging, labeling, marking, and placarding of hazardous waste and hazardous material in accordance with 49 CFR 171 - 178, State, and local laws and regulations is the Contractor's responsibility. Transport Contractor generated hazardous waste off Government property within 60 days in accordance with the Environmental Protection Agency and the Department of Transportation laws and regulations. Dispose of hazardous waste in compliance with Federal, State and local laws and regulations. Spills of hazardous or toxic materials must be immediately reported to the Contracting Officer. Cleanup and cleanup costs due to spills are the Contractor's responsibility. The disposition of Contractor generated hazardous waste and excess hazardous materials are the Contractor's responsibility. Coordinate the disposition of hazardous waste with the Project Office's Hazardous Waste Manager and the Contracting Officer.

3.4.4 Fuel and Lubricants

Storage, fueling and lubrication of equipment and motor vehicles must be conducted in a manner that affords the maximum protection against spill and evaporation. Manage and store fuel, lubricants and oil in accordance with all Federal, State, Regional, and local laws and regulations. Used lubricants and used oil to be discarded must be stored in marked corrosion-resistant containers and recycled or disposed in accordance with 40 CFR 279, State, and local laws and regulations. Storage of fuel on the project site will be in accordance with all Federal, State, and local laws and regulations.

3.4.5 Waste Water

Disposal of waste water will be as specified below.

a. Waste water from construction activities, such as onsite material processing, concrete curing, foundation and concrete clean-up, water used in concrete trucks, forms, etc. will not be allowed to enter water ways or to be discharged prior to being treated to remove pollutants. Dispose of the construction related waste water off-Government property in accordance with all Federal, State, Regional and Local laws and regulations.

b. For discharge of ground water, the Contractor shall obtain a State or Federal permit specific for pumping and discharging ground water prior to surface discharging. In South Dakota the contractor may also need to obtain a Temporary Water Right Permit from the SDDANR Water Rights Program for any dewatering. The SDDANR Water Rights Program can be contacted at (605)773-3352 to determine if a permit is required.

c. Water generated from the flushing of lines after disinfection or disinfection in conjunction with hydrostatic testing will be land applied in accordance with all Federal, State, and local laws and regulations for land application or discharged into the sanitary sewer with prior approval and/or notification to the Waste Water Treatment Plant's Operator.

3.5 RECYCLING AND WASTE MINIMIZATION

Participate in State and local government sponsored recycling programs. The Contractor is further encouraged to minimize solid waste generation throughout the duration of the project.

Divert a minimum of 60 percent by weight of the non-hazardous project construction waste and demolition debris/waste from the landfill or incinerator. Follow applicable industry standards in the management of waste. Apply sound environmental principles in the management of waste. (1) Practice efficient waste management when sizing, cutting, and installing products and materials and (2) use all reasonable means to divert construction waste and demolition debris/waste from landfills and incinerators and to facilitate the recycling or reuse of excess construction materials.

3.6 NON-HAZARDOUS SOLID WASTE DIVERSION REPORT

Maintain an inventory of non-hazardous solid waste diversion and disposal

of construction and demolition debris. Submit a report to the Contracting Officer on the first working day after each fiscal year quarter, starting the first quarter that non-hazardous solid waste has been generated. Include the following in the report:

a. Construction and Demolition (C&D) Debris Disposed = _____ in cubic yards or tons, as appropriate.

b. Construction and Demolition (C&D) Debris Recycled = _____ in cubic yards or tons, as appropriate.

c. Total C&D Debris Generated = _____ in cubic yards or tons, as appropriate.

d. Waste Sent to Waste-To-Energy Incineration Plant (This amount should not be included in the recycled amount) = _____ in cubic yards or tons, as appropriate.

3.7 HISTORICAL, ARCHAEOLOGICAL, AND CULTURAL RESOURCES

If during excavation or other construction activities any previously unidentified or unanticipated historical, archaeological, and cultural resources are discovered or found, all activities that may damage or alter such resources will be temporarily suspended. Resources covered by this paragraph include but are not limited to: any human skeletal remains or burials; artifacts; shell, midden, bone, charcoal, or other deposits; rock or coral alignments, pavings, wall, or other constructed features; and any indication of agricultural or other human activities. Upon such discovery or find, immediately notify the Contracting Officer so that the appropriate authorities may be notified and a determination made as to their significance and what, if any, special disposition of the finds should be made. Cease all activities that may result in impact to or the destruction of these resources. Secure the area and prevent employees or other persons from trespassing on, removing, or otherwise disturbing such resources.

3.8 BIOLOGICAL RESOURCES

Minimize interference with, disturbance to, and damage to fish, wildlife, and plants including their habitat. The protection of threatened and endangered animal and plant species, including their habitat, is the Contractor's responsibility in accordance with Federal, State, Regional, and local laws and regulations.

3.8.1 Endangered/Threatened Species

The Contractor shall be responsible for the protection of threatened and endangered animal and plant species including their habitat in accordance with Federal, State, Regional, and local laws and regulations. The following are known endangered/threatened species that could possibly be in the project area.

3.8.1.1 Interior Least Terns and/or Piping Plovers

No Construction shall occur within a quarter of a mile of the areas identified as nesting habitat for the Interior Least Terns and/or Piping Plovers between the dates of April 15 and August 15 of any year.

3.8.1.2 Bald Eagles

The Contractor shall be responsible for identifying and avoiding disturbance to bald eagles which may be roosting in the project area. The Government recommends avoiding roosting bald eagles by eliminating activity within 75 meters of the roosting bald eagle. However, this is a general recommendation, and may change dependent upon location, available cover, and concealment. It is the Contractor's responsibility to accurately determine appropriate distances to avoid disturbing the Bald Eagle. The Contractor shall ensure that his employees are able to identify bald eagles and shall avoid disturbing bald eagles.

3.8.2 Migratory Bird Treaty Act

Clearing and grubbing shall be scheduled so as to avoid disturbance to any active nests of migratory birds covered by the above Act. Normally, that allows clearing only from 15 September to 31 January. However, if the CO determines that trees in the work area are free of nests, the contractor may clear such trees outside that time window. Adherence to these guidelines will help avoid any unnecessary take of migratory birds and the penalties specified in the Act and associated regulations.

3.9 INTEGRATED PEST MANAGEMENT

In order to minimize impacts to existing fauna and flora, the Contractor through the Contracting Officer, must coordinate with the Project Pesticide Coordinator (PPC)at the earliest possible time prior to pesticide application. Discuss integrated pest management strategies with the PPC and receive concurrence from the PPC through the COR prior to the application of any pesticide associated with these specifications. Installation Project Office Pest Management personnel will be given the opportunity to be present at all meetings concerning treatment measures for pest or disease control and during application of the pesticide. The use and management of pesticides are regulated under 40 CFR 150 - 189.

3.9.1 Pesticide Delivery and Storage

Deliver pesticides to the site in the original, unopened containers bearing legible labels indicating the EPA registration number and the manufacturer's registered uses. Store pesticides according to manufacturer's instructions and under lock and key when unattended.

3.9.2 Qualifications

For the application of pesticides, use the services of a subcontractor whose principal business is pest control. The subcontractor must be licensed and certified in the state where the work is to be performed.

3.9.3 Pesticide Handling Requirements

Formulate, treat with, and dispose of pesticides and associated containers in accordance with label directions and use the clothing and personal protective equipment specified on the labeling for use during all phases of the application. Furnish Material Safety Data Sheets (MSDS) for all pesticide products.

3.9.4 Application

Apply pesticides using a State Certified Pesticide Applicator in

accordance with EPA label restrictions and recommendation. The Certified Applicator must wear clothing and personal protective equipment as specified on the pesticide label. The Contracting Officer will designate locations for water used in formulating. Do not allow the equipment to overflow. Prior to application of pesticide, all equipment must be inspected for leaks, clogging, wear, or damage and repaired prior to application of pesticide.

3.10 PREVIOUSLY USED EQUIPMENT

Clean all previously used construction equipment prior to bringing it onto the project site. Ensure that the equipment is free from soil residuals, egg deposits from plant pests, noxious weeds, and plant seeds. Consult with the USDA jurisdictional office for additional cleaning requirements.

3.11 MAINTENANCE OF POLLUTION FACILITIES

Maintain permanent and temporary pollution control facilities and devices for the duration of the contract or for that length of time construction activities create the particular pollutant.

3.12 TRAINING OF CONTRACTOR PERSONNEL

The Contractor's personnel must be trained in all phases of environmental protection and pollution control. Conduct environmental protection/pollution control meetings for all personnel prior to commencing construction activities. Additional meetings must be conducted for new personnel and when site conditions change. Include in the training and meeting agenda: methods of detecting and avoiding pollution; familiarization with statutory and contractual pollution standards; installation and care of devices, vegetative covers, and instruments required for monitoring purposes to ensure adequate and continuous environmental protection/pollution control; anticipated hazardous or toxic chemicals or wastes, and other regulated contaminants; recognition and protection of archaeological sites, artifacts, wetlands, and endangered species and their habitat that are known to be in the area.

3.13 POST PERFORMANCE CLEANUP

The Contractor will clean up all areas used for construction in accordance with Contract Clause: "Cleaning Up". Unless otherwise instructed in writing by the Contracting Officer, obliterate all signs of temporary construction facilities such as haul roads, work area, structures, foundations of temporary structures, stockpiles of excess or waste materials, and other vestiges of construction prior to final acceptance of the work. The disturbed area must be graded, filled and the entire area seeded unless otherwise indicated.

-- End of Section --

This page was intentionally left blank for duplex printing.

SECTION TABLE OF CONTENTS

DIVISION 01 - GENERAL REQUIREMENTS

SECTION 01 57 23

TEMPORARY STORM WATER POLLUTION CONTROL

PART 1 GENERAL

1.1 REFERENCES
1.2 GENERAL
1.3 SUBMITTALS
1.4 EROSION AND SEDIMENT CONTROLS
1.4.1 Stabilization Practices
1.4.1.1 Permanent Seeding
1.4.1.2 Temporary Seeding and Mulching
1.4.1.3 Erosion Control Blankets
1.4.2 Temporary Structural Practices
1.4.2.1 Silt Fences
1.4.2.2 Storm Drain Inlet Protection
1.4.2.3 Culvert Inlet Protection
1.4.2.4 Rock Check Dams
1.4.2.5 Stone Construction Entrance
1.4.2.6 Sediment Trap
1.4.2.7 Diversion Dikes

PART 2 PRODUCTS

2.1 COMPONENTS FOR SILT FENCES
2.1.1 Geotextile
2.1.2 Silt Fence Stakes and Posts
2.1.3 Mill Certificate or Affidavit
2.1.4 Identification Storage and Handling
2.1.5 Support Mesh
2.2 EROSION CONTROL BLANKETS
2.2.1 Netless Erosion Control Blanket
2.2.2 Single-Net Erosion Control Blanket
2.2.3 Double-Net Erosion Control Blanket
2.3 PERMANENT TURF REINFORCEMENT MAT
2.4 COMPONENTS FOR SEDIMENT TRAP
2.5 COMPONENTS FOR INLET PROTECTION
2.6 STONE CONSTRUCTION ENTRANCE
2.7 ROCK CHECK DAMS
2.8 GEOTEXTILES

PART 3 EXECUTION

3.1 INSTALLATION OF SILT FENCES
3.2 EROSION CONTROL BLANKETS
3.3 TURF REINFORCEMENT MAT
3.4 SEDIMENT TRAP
3.5 STONE CONSTRUCTION ENTRANCE
3.6 MAINTENANCE

3.6.1 Silt Fences
3.6.2 Storm Drain Inlet Protection
3.6.3 Rock Check Dams
3.6.4 Stone Construction Entrance
3.6.5 Sediment Traps
3.6.6 Diversion Dikes
3.7 INSPECTIONS
3.7.1 General
3.7.2 Inspections Details
3.7.3 Inspection Reports

-- End of Section Table of Contents --

SECTION 01 57 23

TEMPORARY STORM WATER POLLUTION CONTROL

PART 1 GENERAL

1.1 REFERENCES

The publications listed below form a part of this specification to the extent referenced. The publications are referred to in the text by basic designation only.

ASTM INTERNATIONAL (ASTM)

ASTM D448	(2012; R 2017) Standard Classification for Sizes of Aggregate for Road and Bridge Construction
ASTM D4873/D4873M	(2017; R 2021) Standard Guide for Identification, Storage, and Handling of Geosynthetic Rolls and Samples

AMERICAN ASSOCIATION OF STATE HIGHWAY AND TRANSPORTATION OFFICIALS (AASHTO)

AASHTO M 288	(2021) Standard Specification for Geosynthetic Specification for Highway Applications

U.S. FEDERAL HIGHWAY ADMINISTRATION (FHWA)

FHWA FP-24	(2024) FP-24 Standard Specifications for Construction of Roads and Bridges on Federal Highway Projects

1.2 GENERAL

Implement the storm water pollution prevention measures specified in this section in a manner which will meet the requirements of Section 01 57 20.00 10 ENVIRONMENTAL PROTECTION, and the requirements of the National Pollution Discharge Elimination System (NPDES) permit specified in Section 01 41 26.01 24 NPDES PERMIT REQUIREMENTS FOR STORM WATER DISCHARGES FROM CONSTRUCTION SITES.

1.3 SUBMITTALS

Government approval is required for submittals with a "G" designation; submittals not haveing a "G" designation are for information only. When used, a designation following the "G" designation identifies the office that will review the submittal for the Government. Submit the following in accordance with Section 01 33 00 SUBMITTAL PROCEDURES:

SD-07 Certificates

Mill Certificate or Affidavit

1.4 EROSION AND SEDIMENT CONTROLS

The controls and measures required by the Contractor are described in the Storm Water Pollution Prevention Plans (SWPPP) per Section 01 41 26.01 24 NPDES PERMIT REQUIREMENTS FOR STORM WATER DISCHARGES FROM CONSTRUCTION SITES.

1.4.1 Stabilization Practices

The stabilization practices to be implemented may include temporary seeding, mulching, sod stabilization, vegetative buffer strips, erosion control blankets, protection of trees, preservation of mature vegetation, etc. Record the dates when the major grading activities occur on the daily CQC report; when construction activities temporarily or permanently cease on a portion of the site; and when stabilization practices are initiated.

1.4.1.1 Permanent Seeding

Stabilize disturbed areas of the site where construction activities permanently cease with permanent seeding no more than 14 days after the construction activity ceases, except as follows. When the initiation of permanent seeding is stopped due to snow cover or arid conditions, initiate permanent seeding as soon as practicable.

1.4.1.2 Temporary Seeding and Mulching

Temporarily seed and mulch areas where construction activities will temporarily cease for more than one year. Stabilize disturbed areas of the site where construction activities temporarily cease for more than 21 days and less than one year with either temporary seeding and mulching or mulching not more than 14 days after construction activity ceases, except as follows. When the initiation of temporary stabilization measures is stopped due to snow cover or arid conditions, initiate stabilization measures as soon as practicable.

1.4.1.3 Erosion Control Blankets

Erosion control blanket may be installed on steep slopes and in drainage swales and ditches to protect finished grades from erosion.

1.4.2 Temporary Structural Practices

Implement temporary structural practices to divert flows from exposed soils, temporarily store flows, or otherwise limit runoff and the discharge of pollutants from exposed areas of the site to the degree attainable. Implement temporary structural practices in a timely manner during the construction process to minimize erosion and sediment runoff. Temporary structural practices shall include but not be limited to the following devices. Location and details of installation and construction are shown on the drawings.

1.4.2.1 Silt Fences

Provide silt fences as a temporary structural practice to minimize erosion and sediment runoff. Properly install silt fences to effectively retain sediment immediately after completing each phase of work where erosion would occur in the form of sheet and rill erosion (e.g. clearing and grubbing, excavation, embankment, and grading). Install silt fence

barriers along the down slope boundary of all disturbed areas prior to begining land-distrubing activities in those areas. Silt fence barriers may be installed across ditches or swales but not where the drainage area is greater than 1 acre. Removal of silt fence barriers shall be approved by the Contracting Officer.

1.4.2.2 Storm Drain Inlet Protection

Install storm drain inlet protection at each new and existing inlet which receives storm runoff from disturbed areas of 1 acre of less. Remove the protection at each inlet once the disturbed area has been finally stabilized.

1.4.2.3 Culvert Inlet Protection

Install culvert inlet protection at all culverts with a drainage area of 1 acre or less.

1.4.2.4 Rock Check Dams

Rock check dams may be used to reduce erosion of temporary or permanent ditches or swales. Use type 1 rock check dams when the upstream drainage area is less than 2 acres. Use type 2 rock check dams when the upstream area is 2 to 10 acres.

1.4.2.5 Stone Construction Entrance

Construct a stone construction entrance wherever traffic will be leaving the construction site and move directly onto a paved road. Remove stone construction entrances after the site has been finally stabilized.

1.4.2.6 Sediment Trap

Sediment traps may be constructed below disturbed areas where the total contributing drainage area is less than 3 acres. Sediment traps, when used, should be constructed prior to disturbance of upslope areas. Sediment traps must have an initial storage volume of 134 cubic yards per acre of drainage area, half of which shall be in the form of a permanent pool or wet storage to provide a stable settling medium. The remaining half shall be in the form of a drawdown or dry storage which will provide extended settling time during less frequent, larger storm events.

1.4.2.7 Diversion Dikes

Diversion dikes may be constructed to divert runoff from upslope drainage areas away from unprotected disturbed areas and slopes to a stabiilized outlet or to divert sediment-laden runoff from a disturbed area to a sediment-trapping facility such as a sediment trap or sediment basin. Diversion dikes shall have a maximum channel slope of 2 percent and shall be adequately compacted to prevent failure. The minimum height measured from the top of the dike to the bottom of the channel shall be 18 inches. The minimum base width shall be 6 feet and the minimum top width shall be 2 feet. The Contractor shall ensure that the diversion dikes are not damaged by construction operations or traffic.

PART 2 PRODUCTS

2.1 COMPONENTS FOR SILT FENCES

2.1.1 Geotextile

The geotextile shall comply with the requirements of AASHTO M 288 for temporary silt fence.

2.1.2 Silt Fence Stakes and Posts

Use either wooden stakes or steel posts for fence construction. Wooden stakes utilized for silt fence construction, shall have a minimum cross section of 2 inches by 2 inches when oak is used and 4 inches by 4 inches when pine is used, and shall have a minimum length of 3 feet. Steel posts (standard "U" or "T" section) utilized for silt fence construction, shall have a minimum weight of 1.33 pounds per linear foot and a minimum length of 5 feet.

2.1.3 Mill Certificate or Affidavit

Provide a mill certificate or affidavit attesting that the geotextile and factory seams meet chemical, physical, and manufacturing requirements specified above. The mill certificate or affidavit shall specify the actual Minimum Average Roll Values and shall identify the fabric supplied by roll identification numbers. Submit a mill certificate or affidavit signed by a legally authorized official from the company manufacturing the geotextile.

2.1.4 Identification Storage and Handling

Geotextile shall be identified, stored and handled in accordance with ASTM D4873/D4873M.

2.1.5 Support Mesh

Support mesh shall be 14-1/2 gage or heavier steel wire with a mesh spacing of 6 by 6 inch or a prefabricated polymeric mesh of equivalent strength.

2.2 EROSION CONTROL BLANKETS

Installation staple patterns shall be clearly marked on the erosion control blanket with environmentally safe paint.

2.2.1 Netless Erosion Control Blanket

Erosion control blankets shall be a machine-produced mat with a biodegradable agricultural straw matrix (approximately 0.50 lb/sq yd). The blanket shall have a 12-month typical functional longevity and be designed for use on geotechnically stable slopes with gradients up to 1V:4H and channels with shear stresses up to 0.50 pounds per square foot.

2.2.2 Single-Net Erosion Control Blanket

Erosion control blankets shall be a machine-produced mat with a biodegradable agricultural straw matrix (approximately 0.50 lb/sq yd) and photodegradable netting on the top side. The blanket shall be sewn together with degradable thread. The blanket shall have a 12-month

typical functional longevity and be designed for use on geotechnically stable slopes with gradients up to 1V:3H and channels with shear stresses up to 1.50 pounds per square foot.

2.2.3 Double-Net Erosion Control Blanket

Erosion control blankets shall be a machine-produced mat with a biodegradable agricultural straw matrix (approximately 0.50 lb/sq yd) and photodegradable netting on each side. The blanket shall be sewn together with degradable thread. The blanket shall have a 12-month typical functional longevity and be designed for use on geotechnically stable slopes with gradients up to 1V:2H and channels with shear stresses up to 1.75 pounds per square foot.

2.3 PERMANENT TURF REINFORCEMENT MAT

Turf reinforcement matting shall conform to FHWA FP-24, Section 713, Type 5.A.

2.4 COMPONENTS FOR SEDIMENT TRAP

Coarse aggregate shall conform to ASTM D448, Size 3, 357, or 5. Minor variations from the gradations specified will be permitted. Stone for riprap shall consist of field stone or rough unhewn quarry stone of approximately rectangular shape. The stone shall be hard and angular and of such quality that it will not disintegrate on exposure to water or weathering. The specific gravity of individual stones shall be at least 2.5. Riprap stones shall weigh between 50 and 150 pounds each, except that approximately 10 percent may weigh 50 pounds or less. At least 60 percent shall weight more than 100 pounds. Geotextile shall conform to paragraph GEOTEXTILES.

2.5 COMPONENTS FOR INLET PROTECTION

Aggregates for gravel filter should be sized to get the greatest amount of filtering action possible (by using smaller-sized stone), while not creating significant ponding problems.

2.6 STONE CONSTRUCTION ENTRANCE

Aggregate for construction entrance shall conform to ASTM D448, Size 1. Minor variations from the gradation specified will be permitted. Geotextile shall conform to paragraph GEOTEXTILES.

2.7 ROCK CHECK DAMS

Coarse aggregate shall conform to ASTM D448 size number 1 or approved equal. Riprap shall consist of field stone or rough unhewn quarry stone of approximately rectangular shape. Riprap shall be hard and angular. The specific gravity of individual stones shall be at least 2.5. Concrete rubble may be used provided it has a density of at least 150 pcf. Individual stones shall have a weight of 50 to 150 lbs except that a maximum of 10 percent of stone may weigh less than 50 lbs. At least 60 percent of stones shall weigh more than 100 lbs.

2.8 GEOTEXTILES

Geotextile for other than silt fence shall comply with the requirements of AASHTO M 288 for a separation geotextile.

PART 3 EXECUTION

3.1 INSTALLATION OF SILT FENCES

Silt fences shall extend a minimum of 16 inches above the ground surface and shall not exceed 34 inches above the ground surface. Geotextile shall be from a continuous roll cut to the length of the barrier to avoid the use of joints. When joints are unavoidable, geotextile shall be spliced together at a support post, with a minimum 6 inch overlap, and securely sealed. Silt fence may be installed using either the trench or soil slicing method. Silt fences shall be removed upon approval by the Contracting Officer.

3.2 EROSION CONTROL BLANKETS

Installation of erosion control blankets shall conform to the manufacturer's recommendations.

3.3 TURF REINFORCEMENT MAT

Installation of turf reinforcement matting shall conform to the manufacturer's recommendations.

3.4 SEDIMENT TRAP

The area under the embankment shall be cleared, grubbed, and stripped of any vegetation and root mat. Fill material for the embankment shall be placed in accordance with Section 31 00 00 EARTHWORK. A geotextile shall be placed between the riprap and subgrade.

3.5 STONE CONSTRUCTION ENTRANCE

Clear the area of the entrance of all vegatation, roots, and other objectionable material. The aggregate layer shall have a minimum total thickness of 6 inches. Place a geotextile beneath aggregate for the full width and length of the entrance. A minimum of 3 inches of the aggregate shall be placed in a cut section to provide stability and secure the geotextile. If conditions on the site are such that the majority of the mud is not removed by the vehicles traveling over the stone, then wash the tires of the vehicles before entering the road. Wash water must be carried away from the entrance to an approved settling area to remove sediment. A wash rack may also be installed for washing of vehicles.

3.6 MAINTENANCE

Maintain the temporary and permanent vegetation, erosion and sediment control measures, and other protective measures in good and effective operating condition by performing routine inspections to determine condition and effectiveness, by restoration of destroyed vegetative cover, and by repair of erosion and sediment control measures and other protective measures. Maintenance of protective measures shall conform to the requirements in the SWPPP.

3.6.1 Silt Fences

Inspect silt fences in accordance with paragraph INSPECTIONS. Make any required repairs promptly. Pay close attention to the repair of damaged silt fence resulting from end runs and undercutting. Should the fabric on

a silt fence decompose or become ineffective, and the barrier is still necessary, replace the fabric promptly. Remove sediment deposits when deposits reach one-third of the height of the barrier. Remove silt fence when it is no longer required. Shape the immediate area occupied by the fence and any sediment deposits to an acceptable grade. Seed the areas disturbed by this shaping in accordance with Section 32 92 19 SEEDING.

3.6.2 Storm Drain Inlet Protection

Inspect inlet protection structures after each rainfall and make repairs as needed. Remove sediment and restore the trap to its original dimensions when the sediment has accumulated to one half the design depth.

3.6.3 Rock Check Dams

Check dams should be checked for sediment after each runoff-producing storm event. Remove sediment when it reaches one half the original height of the measure.

3.6.4 Stone Construction Entrance

Maintain stone construction entrances in a conditon which will prevent tracking or flow of mud onto paved roads. This may require periodic top dressing with additional stone or the washing and reworking of existing stone as conditions demand and repair and/or cleanout of any structures used to trap sediment. The use of water trucks to remove materials dropped, washed, or tracked onto roadways will not be permitted under any circumstances.

3.6.5 Sediment Traps

Remove sediment restore the trap to its original dimensions when the sediment has accumulated to one half the design volume of the wet storage. Check filter stone regularly to ensure that filtration performance is maintained. Remove stone choked with sediment and clean or replace. Inspect the structure regularly to ensure that it is structurally sound and has not been damaged by erosion or construction equipement. Inspect the height of the stone outlet to ensure that its center is a least 1 foot below the top of the embankment.

3.6.6 Diversion Dikes

Inspect diversion dikes in accordance with paragraph INSPECTIONS. Pay close attention to the repair of damaged diversion dikes and promptly accomplish necessary repairs. When diversion dikes are no longer required, they shall be shaped to an acceptable grade. Seed the areas disturbed by this shaping in accordance with Section 32 92 19 SEEDING.

3.7 INSPECTIONS

3.7.1 General

Inspect disturbed areas of the construction site, areas used for storage of materials that are exposed to precipitation that have not been finally stabilized, stabilization practices, structural practices, other controls, and area where vehicles exit the site at least once every seven (7) calendar days and within 24 hours of the end of any storm that produces 0.5 inches or more rainfall at the site. Where sites have been finally stabilized, conduct such inspection at least once every month. Inspection

of protective measures shall conform to the requirements in the SWPPP.

3.7.2 Inspections Details

Inspect disturbed areas and areas used for material storage that are exposed to precipitation for evidence of, or the potential for, pollutants entering the drainage system. Observe erosion and sediment control measures to ensure that they are operating correctly. Inspect discharge locations or points to ascertain whether erosion control measures are effective in preventing significant impacts to receiving waters. Inspect locations where vehicles exit the site for evidence of offsite sediment tracking.

3.7.3 Inspection Reports

For each inspection conducted, prepare a report summarizing the scope of the inspection, name(s) of personnel making the inspection, the date(s) of the inspection, major observations relating to the implementation of the storm water pollution prevention measures, maintenance performed, and actions taken. Furnish the report to the Contracting Officer within 24 hours of the inspection as a part of the Contractor's daily CQC REPORT.

-- End of Section --

SECTION TABLE OF CONTENTS

DIVISION 31 - EARTHWORK

SECTION 31 00 00

EARTHWORK

PART 1 GENERAL

1.1 MEASUREMENT PROCEDURES
1.1.1 Excavation
1.1.2 Piping Trench Excavation
1.1.3 Topsoil Requirements
1.1.4 Overhaul Requirements
1.1.5 Select Granular Material
1.2 PAYMENT PROCEDURES
1.2.1 Piping Trench Excavation
1.2.2 Rock Excavation
1.2.3 Unclassified Excavation
1.2.4 Embankment Borrow Material
1.2.5 Topsoil Borrow
1.3 CRITERIA FOR BIDDING
1.4 REFERENCES
1.5 DEFINITIONS
1.5.1 Satisfactory Materials
1.5.2 Unsatisfactory Materials
1.5.3 Cohesionless and Cohesive Materials
1.5.4 Degree of Compaction
1.5.5 Topsoil
1.5.6 Unstable Material
1.6 SYSTEM DESCRIPTION
1.6.1 Classification of Excavation
1.6.1.1 Common Excavation
1.6.1.2 Rock Excavation
1.6.2 Blasting
1.7 SUBMITTALS

PART 2 PRODUCTS

PART 3 EXECUTION

3.1 STRIPPING OF TOPSOIL
3.2 GENERAL EXCAVATION
3.2.1 Ditches, Gutters, and Channel Changes
3.2.2 Drainage Structures
3.3 SELECTION OF BORROW MATERIAL
3.4 OPENING AND DRAINAGE OF EXCAVATION AND BORROW PITS
3.5 GRADING AREAS
3.6 GROUND SURFACE PREPARATION
3.6.1 General Requirements
3.6.2 Frozen Material
3.7 BACKFILLING AND COMPACTION

3.8 EMBANKMENTS
3.8.1 Earth Embankments
3.9 SUBGRADE PREPARATION
3.9.1 Construction
3.9.2 Compaction
3.10 SHOULDER CONSTRUCTION
3.11 FINISHING
3.11.1 Subgrade and Embankments
3.12 PLACING TOPSOIL
3.13 TESTING
3.13.1 Fill and Backfill Material Gradation
3.13.2 In-Place Densities
3.13.3 Optimum Moisture and Maximum Dry Density
3.13.4 Tolerance Tests for Subgrades
3.14 DISPOSITION OF SURPLUS MATERIAL

-- End of Section Table of Contents --

SECTION 31 00 00

EARTHWORK

PART 1 GENERAL

1.1 MEASUREMENT PROCEDURES

1.1.1 Excavation

The unit of measurement for excavation and borrow will be the cubic yard, computed by average truck yardage capacity and borrow operations, including the excavation for road, ditches, gutters, and channel changes, when the material is acceptably utilized or disposed of as herein specified. The measurements will include authorized excavation of rock , authorized excavation of unsatisfactory subgrade soil, allowance will be made on the same basis for selected backfill ordered as replacement. The measurement will not include the volume of subgrade material or other material that is scarified or plowed and reused in-place, and will not include the volume excavated without authorization or the volume of any material used for purposes other than directed. The volume of overburden stripped from borrow pits and the volume of excavation for ditches to drain borrow pits, unless used as borrow material, will not be measured for payment.

1.1.2 Piping Trench Excavation

Excavate to the depths and widths specified for the particular size of pipe. Replace unstable trench bottoms with a selected granular material. Include the additional width at manholes and similar structures, the furnishing, placing and removal of sheeting and bracing, pumping and bailing, and all incidentals necessary to complete the work required by this section.

1.1.3 Topsoil Requirements

Separate excavation, hauling, and spreading or piling of topsoil and related miscellaneous operations will be considered subsidiary obligations of the Contractor, covered under the contract unit price for excavation.

1.1.4 Overhaul Requirements

Allow the unit of measurement for overhaul to be the cubic yard/mile. The overhaul distance will be the distance in miles between the center of volume of the overhaul material in its original position and the center of volume after placing, minus the free-haul distance of 1,000 feet. The haul distance will be measured along the shortest route determined by the Contracting Officer as feasible and satisfactory. Do not measure or waste unsatisfactory materials for overhaul where the length of haul for borrow is within the free-haul limits. Overhaul will only be paid for unclassified excavation operations.

1.1.5 Select Granular Material

Measure select granular material per ton for replacing wet or unstable material in trench bottoms within the limits shown. Provide unit prices

which include furnishing and placing the granular material, excavation and disposal of unsatisfactory material, and additional requirements for sheeting and bracing, pumping, bailing, cleaning, and other incidentals necessary to complete the work.

1.2 PAYMENT PROCEDURES

Payment will constitute full compensation for all labor, equipment, tools, supplies, and incidentals necessary to complete the work.

1.2.1 Piping Trench Excavation

Payment for trench excavation will constitute full payment for excavation and backfilling, including specified overdepth except in rock or unstable trench bottoms. Piping trench excavation shall be incidental to the cost per lineal foot of pipe installed.

1.2.2 Rock Excavation

Rock excavation will be paid for at the contract unit price per cubic yard. Payment for rock excavation encountered during pipe installation will be made in addition to the price per lineal foot of pipe installed, and shall include all necessary means to excavate and dispose of rock.

1.2.3 Unclassified Excavation

Unclassified excavation will be paid for at the contract unit price per cubic yard for unclassified excavation.

1.2.4 Embankment Borrow Material

Embankment borrow material will be paid for at the contract unit prices per cubic yard for satisfactory borrow materials. All costs to excavate and deliver borrow materials to the site shall be included in the contract unit price for embankment borrow materials.

1.2.5 Topsoil Borrow

Topsoil borrow will be paid for at the contract unit price per cubic yard for topsoil borrow. All cost to deliver topsoil borrow to the site shall be included in the contract unit price for topsoil borrow.

1.3 CRITERIA FOR BIDDING

Base bids on the following criteria:

a. Surface elevations are as indicated.

b. Pipes or other artificial obstructions, except those indicated, will not be encountered.

c. Hard materials and rock may be encountered in some areas..

1.4 REFERENCES

The publications listed below form a part of this specification to the extent referenced. The publications are referred to within the text by the basic designation only.

AMERICAN ASSOCIATION OF STATE HIGHWAY AND TRANSPORTATION OFFICIALS (AASHTO)

SOUTH DAKOTA DEPARTMENT OF TRANSPORTATION (SDDOT)

SDDOT	2015 SDDOT Standard Specifications for Roads and Bridges
SDDOT	Materials Manual

ASTM INTERNATIONAL (ASTM)

ASTM C136/C136M	(2014) Standard Test Method for Sieve Analysis of Fine and Coarse Aggregates
ASTM D1140	(2014) Amount of Material in Soils Finer than the No. 200 (75-micrometer) Sieve
ASTM D1556	(2007) Density and Unit Weight of Soil in Place by the Sand-Cone Method
ASTM D2487	(2011) Soils for Engineering Purposes (Unified Soil Classification System)
ASTM D422	(1963; R 2007; E 2014; E 2014) Particle-Size Analysis of Soils
ASTM D4318	(2010; E 2014) Liquid Limit, Plastic Limit, and Plasticity Index of Soils

1.5 DEFINITIONS

1.5.1 Satisfactory Materials

Satisfactory materials comprise any materials classified by ASTM D2487 as GW, GP, GM, GP-GM, GW-GM, GC, GP-GC, GM-GC, SW, SP, SM, SW-SM, SC, SW-SC, SP-SM, SP-SC, CL, ML, CL-ML, CH, MH. Satisfactory materials for grading comprise stones less than 8 inches, except for fill material for pavements which comprise stones less than 3 inches in any dimension.

1.5.2 Unsatisfactory Materials

Materials which do not comply with the requirements for satisfactory materials are unsatisfactory. Unsatisfactory materials also include man-made fills; trash; refuse; backfills from previous construction; and material classified as satisfactory which contains root and other organic matter or frozen material. Notify the Contracting Officer when encountering any contaminated materials.

1.5.3 Cohesionless and Cohesive Materials

Cohesionless materials include materials classified in ASTM D2487 as GW, GP, SW, and SP. Cohesive materials include materials classified as GC,

SC, ML, CL, MH, and CH. Materials classified as GM and SM will be identified as cohesionless only when the fines are nonplastic. Perform testing, required for classifying materials, in accordance with ASTM D4318, ASTM C136/C136M, ASTM D422, and ASTM D1140.

1.5.4 Degree of Compaction

Degree of compaction required as per 2015 SDDOT Standard Specifications for Roads and Bridges.

1.5.5 Topsoil

Material suitable for topsoils obtained from offsite areas and excavations is defined as: Natural, friable soil representative of productive, well-drained soils in the area, free of subsoil, stumps, rocks larger than one inch diameter, brush, weeds, toxic substances, and other material detrimental to plant growth. Amend topsoil pH range to obtain a pH of 5.5 to 7.

1.5.6 Unstable Material

Unstable materials are too wet to properly support the utility pipe, conduit, or appurtenant structure.

1.6 SYSTEM DESCRIPTION

1.6.1 Classification of Excavation

No consideration will be given to the nature of the materials, and all excavation will be designated as unclassified excavation with the exception of rock excavation.

1.6.1.1 Common Excavation

Include common excavation with the satisfactory removal and disposal of all materials not classified as rock excavation.

1.6.1.2 Rock Excavation

Submit notification of encountering rock in the project. Include rock excavation with blasting, excavating, grading, disposing of material classified as rock, and the satisfactory removal and disposal of boulders 1/2 cubic yard or more in volume; solid rock; rock material that is in ledges, bedded deposits, and unstratified masses, which cannot be removed without systematic drilling and blasting; firmly cemented conglomerate deposits possessing the characteristics of solid rock impossible to remove without systematic drilling and blasting; and hard materials. Include the removal of any concrete or masonry structures, except pavements, exceeding 1/2 cubic yard in volume that may be encountered in the work in this classification. If at any time during excavation, excluding excavation from borrow areas, the Contractor encounters material that may be classified as rock excavation, uncover such material and notify the Contracting Officer. Do not proceed with the excavation of this material until the Contracting Officer has classified the materials as common excavation or rock excavation and has taken cross sections as required. Failure on the part of the Contractor to uncover such material, notify the Contracting Officer, and allow ample time for classification and cross

sectioning of the undisturbed surface of such material will cause the forfeiture of the Contractor's right of claim to any classification or volume of material to be paid for other than that allowed by the Contracting Officer for the areas of work in which such deposits occur.

1.6.2 Blasting

Blasting will not be permitted unless approved by the Contracting Officer.

1.7 SUBMITTALS

Government approval is required for submittals with a "G" designation; submittals not having a "G" designation are for information only. When used, a designation following the "G" designation identifies the office that will review the submittal for the Government. Submit the following in accordance with Section 01 33 00 SUBMITTAL PROCEDURES:

SD-03 Product Data

Rock Excavation; G

Opening of any Excavation or Borrow Pit; G

Shoulder Construction; G

SD-06 Test Reports

Testing; G

Within 24 hours of conclusion of physical tests, submit 2 copies of test results, including calibration curves and results of calibration tests.

SD-07 Certificates

Testing; G

PART 2 PRODUCTS

PART 3 EXECUTION

3.1 STRIPPING OF TOPSOIL

Where indicated or directed, strip topsoil to a depth of 4 inches. Spread topsoil on areas already graded and prepared for topsoil, or transported and deposited in stockpiles convenient to areas that are to receive application of the topsoil later, or at locations indicated or specified. Keep topsoil separate from other excavated materials, brush, litter, objectionable weeds, roots, stones larger than 2 inches in diameter, and other materials that would interfere with planting and maintenance operations. Stockpile in locations indicated .

3.2 GENERAL EXCAVATION

Perform excavation of every type of material encountered within the limits of the project to the lines, grades, and elevations indicated and as specified. Perform the grading in accordance with the typical sections shown and the tolerances specified in paragraph FINISHING. Transport satisfactory excavated materials and place in fill or embankment within

the limits of the work. Excavate unsatisfactory materials encountered within the limits of the work below grade and replace with satisfactory materials as directed. Include such excavated material and the satisfactory material ordered as replacement in excavation. Dispose surplus satisfactory excavated material not required for fill or embankment in areas approved for surplus material storage or designated waste areas. Dispose unsatisfactory excavated material in designated waste or spoil areas. During construction, perform excavation and fill in a manner and sequence that will provide proper drainage at all times. Excavate material required for fill or embankment in excess of that produced by excavation within the grading limits from the borrow areas indicated or from other approved areas selected by the Contractor as specified.

3.2.1 Ditches, Gutters, and Channel Changes

Finish excavation of ditches, gutters, and channel changes by cutting accurately to the cross sections, grades, and elevations shown on Drawings. Do not excavate ditches and gutters below grades shown. Backfill the excessive open ditch or gutter excavation with satisfactory, thoroughly compacted, material or with suitable stone or cobble to grades shown. Dispose excavated material as shown or as directed, except in no case allow material be deposited a maximum 4 feet from edge of a ditch. Maintain excavations free from detrimental quantities of leaves, brush, sticks, trash, and other debris until final acceptance of the work.

3.2.2 Drainage Structures

Make excavations to the lines, grades, and elevations shown, or as directed. Provide trenches and foundation pits of sufficient size to permit the placement and removal of forms for the full length and width of structure footings and foundations as shown. Clean rock or other hard foundation material of loose debris and cut to a firm, level, stepped, or serrated surface. Remove loose disintegrated rock and thin strata. Do not disturb the bottom of the excavation when concrete or masonry is to be placed in an excavated area. Do not excavate to the final grade level until just before the concrete or masonry is to be placed. Where pile foundations are to be used, stop the excavation of each pit at an elevation 1 foot above the base of the footing, as specified, before piles are driven. After the pile driving has been completed, remove loose and displaced material and complete excavation, leaving a smooth, solid, undisturbed surface to receive the concrete or masonry.

3.3 SELECTION OF BORROW MATERIAL

Select borrow material to meet the requirements and conditions of the particular fill or embankment for which it is to be used. Obtain borrow material from the borrow areas from approved private sources. Unless otherwise provided in the contract, the Contractor is responsible for obtaining the right to procure material, pay royalties and other charges involved, and bear the expense of developing the sources, including rights-of-way for hauling from the owners. Borrow material from approved sources on Government-controlled land may be obtained without payment of royalties. Unless specifically provided, do not obtain borrow within the limits of the project site without prior written approval. Consider necessary clearing, grubbing, and satisfactory drainage of borrow pits and the disposal of debris thereon related operations to the borrow excavation.

3.4 OPENING AND DRAINAGE OF EXCAVATION AND BORROW PITS

Notify the Contracting Officer sufficiently in advance of the opening of any excavation or borrow pit or borrow areas to permit elevations and measurements of the undisturbed ground surface to be taken. Except as otherwise permitted, excavate borrow pits and other excavation areas providing adequate drainage. Transport overburden and other spoil material to designated spoil areas or otherwise dispose of as directed. Provide neatly trimmed and drained borrow pits after the excavation is completed. Ensure that excavation of any area, operation of borrow pits, or dumping of spoil material results in minimum detrimental effects on natural environmental conditions.

3.5 GRADING AREAS

Where indicated, divide work into grading areas within which satisfactory excavated material will be placed in embankments, fills, and required backfills. Do not haul satisfactory material excavated in one grading area to another grading area except when so directed in writing. Place and grade stockpiles of satisfactory materials as specified.

3.6 GROUND SURFACE PREPARATION

3.6.1 General Requirements

Remove and replace unsatisfactory material with satisfactory materials, as directed by the Contracting Officer, in surfaces to receive fill or in excavated areas. Scarify the surface to a depth of 6 inches before the fill is started. Plow, step, bench, or break up sloped surfaces steeper than 1 vertical to 4 horizontal so that the fill material will bond with the existing material. When subgrades are less than the specified density, break up the ground surface to a minimum depth of 6 inches, pulverizing, and compacting to the specified density. When the subgrade is part fill and part excavation or natural ground, scarify the excavated or natural ground portion to a depth of 12 inches and compact it as specified for the adjacent fill.

3.6.2 Frozen Material

Do not place material on surfaces that are muddy, frozen, or contain frost. Finish compaction by sheepsfoot rollers, pneumatic-tired rollers, steel-wheeled rollers, or other approved equipment well suited to the soil being compacted. Moisten material as necessary to plus or minus 5 percent of optimum moisture .

3.7 BACKFILLING AND COMPACTION

Place backfill adjacent to any and all types of structures, and compact to as per 2015 SDDOT Standard Specification for Roads and Bridges

3.8 EMBANKMENTS

3.8.1 Earth Embankments

Construct earth embankments from satisfactory materials free of organic or frozen material and rocks with any dimension greater than 3 inches. Place the material in successive horizontal layers of loose material not more than 12 inches in depth. Spread each layer uniformly on a soil surface that has been moistened or aerated as necessary, and scarified or

otherwise broken up so that the fill will bond with the surface on which it is placed. After spreading, plow, disk, or otherwise brake up each layer; moisten or aerate as necessary; thoroughly mix; and compact to at least 90 percent laboratory maximum density for cohesive materials or 95 percent laboratory maximum density for cohesionless materials. Compaction requirements for the upper portion of earth embankments forming subgrade for pavements are identical with those requirements specified in paragraph SUBGRADE PREPARATION. Finish compaction by sheepsfoot rollers, pneumatic-tired rollers, steel-wheeled rollers, vibratory compactors, or other approved equipment.

3.9 SUBGRADE PREPARATION

3.9.1 Construction

Shape subgrade to line, grade, and cross section, and compact as specified. Include plowing, disking, and any moistening or aerating required to obtain specified compaction for this operation. Remove soft or otherwise unsatisfactory material and replace with satisfactory excavated material or other approved material as directed. Excavate rock encountered in the cut section to a depth of 6 inches below finished grade for the subgrade. Bring up low areas resulting from removal of unsatisfactory material or excavation of rock to required grade with satisfactory materials, and shape the entire subgrade to line, grade, and cross section and compact as specified. Do not vary the elevation of the finish subgrade more than 0.05 foot from the established grade and cross section.

3.9.2 Compaction

Finish compaction by sheepsfoot rollers, pneumatic-tired rollers, steel-wheeled rollers, vibratory compactors, or other approved equipment. Except for paved areas, compact each layer of the embankment to at least 95 percent of maximum dry density, as per 2015 SDDOT Standard Specification for Roads and Bridges,

3.10 SHOULDER CONSTRUCTION

Construct shoulders of satisfactory excavated or borrow material or as otherwise shown or specified.. Submit advanced notice on shoulder construction for rigid pavements. Construct shoulders immediately after adjacent paving is complete. In the case of rigid pavements, do not construct shoulders until permission of the Contracting Officer has been obtained. Compact the entire shoulder area to at least the percentage of maximum density as specified in paragraph SUBGRADE PREPARATION above, for specific ranges of depth below the surface of the shoulder. Finish compaction by sheepsfoot rollers, pneumatic-tired rollers, steel-wheeled rollers, vibratory compactors, or other approved equipment. Finish shoulder construction in proper sequence in such a manner that adjacent ditches will be drained effectively and that no damage of any kind is done to the adjacent completed pavement. Align the completed shoulders true to grade and shaped to drain in conformity with the cross section shown.

3.11 FINISHING

Finish the surface of excavations, embankments, and subgrades to a smooth and compact surface in accordance with the lines, grades, and cross sections or elevations shown. Provide the degree of finish for graded areas within 0.1 foot of the grades and elevations indicated except that

the degree of finish for subgrades specified in paragraph SUBGRADE PREPARATION. Finish gutters and ditches in a manner that will result in effective drainage. Finish the surface of areas to be turfed from settlement or washing to a smoothness suitable for the application of turfing materials. Repair graded, topsoiled, or backfilled areas prior to acceptance of the work, and re-established grades to the required elevations and slopes.

3.11.1 Subgrade and Embankments

During construction, keep embankments and excavations shaped and drained. Maintain ditches and drains along subgrade to drain effectively at all times. Do not disturb the finished subgrade by traffic or other operation. Protect and maintain the finished subgrade in a satisfactory condition until ballast, subbase, base, or pavement is placed. Do not permit the storage or stockpiling of materials on the finished subgrade. Do not lay subbase, base course, ballast, or pavement until the subgrade has been checked and approved, and in no case place subbase, base, surfacing, pavement, or ballast on a muddy, spongy, or frozen subgrade.

3.12 PLACING TOPSOIL

On areas to receive topsoil, prepare the compacted subgrade soil to a 2 inches depth for bonding of topsoil with subsoil. Spread topsoil evenly to a thickness of 4 inch and grade to the elevations and slopes shown. Do not spread topsoil when frozen or excessively wet or dry. Obtain material required for topsoil in excess of that produced by excavation within the grading limits from offsite areas or areas indicated.

3.13 TESTING

Perform testing by a Certified commercial testing laboratory or the Contractor's Certified testing facility.

a. Determine field in-place density in accordance with ASTM D1556 .

b. When test results indicate, as determined by the Contracting Officer, that compaction is not as specified, remove the material, replace and recompact to meet specification requirements.

c. Perform tests on recompacted areas to determine conformance with specification requirements. Appoint a registered professional civil engineer to certify inspections and test results. These certifications shall state that the tests and observations were performed by or under the direct supervision of the engineer and that the results are representative of the materials or conditions being certified by the tests. The following number of tests, if performed at the appropriate time, will be the minimum acceptable for each type operation.

3.13.1 Fill and Backfill Material Gradation

One test per 1000 cubic yards stockpiled or in-place source material. Determine gradation of fill and backfill material in accordance with ASTM C136/C136M, ASTM D422, and/or ASTM D1140.

3.13.2 In-Place Densities

Perform tests as per SDDOT Materials Manual and 2015 SDDOT Standard

Specification for Roads and Bridges,

3.13.3 Optimum Moisture and Maximum Dry Density

Perform tests as per SDDOT Materials Manual and 2015 SDDOT Standard Specification for Roads and Bridges.

3.13.4 Tolerance Tests for Subgrades

Perform continuous checks on the degree of finish specified in paragraph SUBGRADE PREPARATION during construction of the subgrades.

3.14 DISPOSITION OF SURPLUS MATERIAL

Remove surplus material or other soil material not required or suitable for filling or backfilling, and brush, refuse, stumps, roots, and timber to a Government disposal area as indicated by COR.

-- End of Section --

SECTION TABLE OF CONTENTS

DIVISION 31 - EARTHWORK

SECTION 31 05 19

GEOTEXTILE

PART 1 GENERAL

1.1 MEASUREMENT
1.2 PAYMENT
1.3 REFERENCES
1.4 SUBMITTALS
1.5 DELIVERY, STORAGE, AND HANDLING
1.5.1 Delivery
1.5.2 Storage
1.5.3 Handling

PART 2 PRODUCTS

2.1 RAW MATERIALS
2.1.1 Geotextile
2.2 MANUFACTURING QUALITY CONTROL SAMPLING AND TESTING

PART 3 EXECUTION

3.1 INSTALLATION
3.1.1 Subgrade Preparation
3.1.2 Placement
3.2 SEAMS
3.2.1 Overlap Seams
3.3 PROTECTION

-- End of Section Table of Contents --

SECTION 31 05 19

GEOTEXTILE

PART 1 GENERAL

1.1 MEASUREMENT

Measure the as-built surface area, covered by geotextile, in square yards. Allowance will be made for geotextile in anchor and/or drainage trenches but no allowance will be made for waste, overlaps, damaged materials, repairs, or materials used for the convenience of the Contractor.

1.2 PAYMENT

Geotextile installed and accepted will be paid for at the respective contract unit price in the bidding schedule. This unit price will include the cost of materials, equipment, installation, testing, and other costs associated with placement of the geotextile.

1.3 REFERENCES

The publications listed below form a part of this specification to the extent referenced. The publications are referred to within the text by the basic designation only.

ASTM INTERNATIONAL (ASTM)

ASTM D4354	(2012) Sampling of Geosynthetics for Testing
ASTM D4355/D4355M	(2014) Deterioration of Geotextiles from Exposure to Light, Moisture and Heat in a Xenon-Arc Type Apparatus
ASTM D4491	(1999a; R 2014; E 2014) Water Permeability of Geotextiles by Permittivity
ASTM D4533/D4533M	(2015) Standard Test Method for Trapezoid Tearing Strength of Geotextiles
ASTM D4632/D4632M	(2015) Grab Breaking Load and Elongation of Geotextiles
ASTM D4751	(2012) Determining Apparent Opening Size of a Geotextile
ASTM D4759	(2011) Determining the Specification Conformance of Geosynthetics
ASTM D4873	(2002; R 2009) Identification, Storage, and Handling of Geosynthetic Rolls and Samples
ASTM D6241	(2014) Standard Test Method for the Static

Puncture Strength of Geotextiles and Geotextile-Related Products Using a 50-mm Probe

SOUTH DAKOTA DEPARTMENT OF TRANSPORTATION (SDDOT)

1.4 SUBMITTALS

Government approval is required for submittals with a "G" designation; submittals not having a "G" designation are for information only. When used, a designation following the "G" designation identifies the office that will review the submittal for the Government. Submit the following in accordance with Section 01 33 00 SUBMITTAL PROCEDURES:

SD-07 Certificates

Geotextile; G

1.5 DELIVERY, STORAGE, AND HANDLING

Deliver, store, and handle geotextile in accordance with ASTM D4873.

1.5.1 Delivery

Notify the Contracting Officer a minimum of 24 hours prior to delivery and unloading of geotextile rolls packaged in an opaque, waterproof, protective plastic wrapping. The plastic wrapping shall not be removed until deployment. If quality assurance samples are collected, immediately rewrap rolls with the plastic wrapping. Geotextile or plastic wrapping damaged during storage or handling shall be repaired or replaced, as directed. Label each roll with the manufacturer's name, geotextile type, roll number, roll dimensions (length, width, gross weight), and date manufactured.

1.5.2 Storage

Protect rolls of geotextile from construction equipment, chemicals, sparks and flames, temperatures in excess of 160 degrees F, or any other environmental condition that may damage the physical properties of the geotextile. To protect geotextile from becoming saturated, either elevate rolls off the ground or place them on a sacrificial sheet of plastic in an area where water will not accumulate.

1.5.3 Handling

Handle and unload geotextile rolls with load carrying straps, a fork lift with a stinger bar, or an axial bar assembly. Rolls shall not be dragged along the ground, lifted by one end, or dropped to the ground.

PART 2 PRODUCTS

2.1 RAW MATERIALS

A minimum of 7 days prior to scheduled use, submit manufacturer's certificate of compliance stating that the geotextile meets the requirements of this section. For needle punched geotextiles, the manufacturer shall also certify that the geotextile has been continuously inspected using permanent on-line full-width metal detectors and does not contain any needles which could damage other geosynthetic layers. The

certificate of compliance shall be attested to by a person having legal authority to bind the geotextile manufacturer.

2.1.1 Geotextile

Provide geotextile that is a nonwoven pervious sheet of polymeric material consisting of long-chain synthetic polymers composed of at least 95 percent by weight polyolefins, polyesters, or polyamides. The use of woven slit film geotextiles (i.e. geotextiles made from yarns of a flat, tape-like character) will not be allowed. Add stabilizers and/or inhibitors to the base polymer, as needed, to make the filaments resistant to deterioration by ultraviolet light, oxidation, and heat exposure. Regrind material, which consists of edge trimmings and other scraps that have never reached the consumer, may be used to produce the geotextile. Post-consumer recycled material may also be used. Geotextile shall be formed into a network such that the filaments or yarns retain dimensional stability relative to each other, including the edges. Geotextiles shall meet the requirements specified in Table 1. Where applicable, Table 1 property values represent minimum average roll values (MARV) in the weakest principal direction. Values for AOS represent maximum average roll values.

TABLE 1
MINIMUM PHYSICAL REQUIREMENTS FOR DRAINAGE GEOTEXTILE

PROPERTY	UNITS	ACCEPTABLE VALUES	TEST METHOD
GRAB STRENGTH	LBS	160	ASTM D4632/D4632M
			ASTM D4632/D4632M
PUNCTURE	LBS	310	ASTM D6241
TRAPEZOID TEAR	LBS	55	ASTM D4533/D4533M
APPARENT OPENING SIZE	U.S. SIEVE	Max. 100 Min. 40 U.S. SIEVE	ASTM D4751
PERMITTIVITY	SEC -1	.1 Min.	ASTM D4491
ULTRAVIOLET DEGRADATION	PERCENT	50 AT 500 HRS	ASTM D4355/D4355M

2.2 MANUFACTURING QUALITY CONTROL SAMPLING AND TESTING

The Manufacturer is responsible for establishing and maintaining a quality control program to assure compliance with the requirements of the specification. A minimum of 7 days prior to scheduled use, submit manufacturer's quality control manual. Documentation describing the quality control program shall be made available upon request. Perform manufacturing quality control sampling and testing in accordance with the manufacturer's approved quality control manual. As a minimum, geotextiles shall be randomly sampled for testing in accordance with ASTM D4354,

Procedure A. Acceptance of geotextile shall be in accordance with ASTM D4759. Tests not meeting the specified requirements will result in the rejection of applicable rolls.

PART 3 EXECUTION

3.1 INSTALLATION

3.1.1 Subgrade Preparation

The surface underlying the geotextile shall be smooth and free of ruts or protrusions which could damage the geotextile.

3.1.2 Placement

Notify the Contracting Officer a minimum of 24 hours prior to installation of geotextile. Geotextile rolls which are damaged or contain imperfections shall be repaired or replaced as directed. The geotextile shall be laid flat and smooth so that it is in direct contact with the subgrade. The geotextile shall also be free of tensile stresses, folds, and wrinkles. On slopes steeper than 10 horizontal on 1 vertical, lay the geotextile with the machine direction of the fabric parallel to the slope direction.

3.2 SEAMS

3.2.1 Overlap Seams

Continuously overlap geotextile panels a minimum of 12 inches at all longitudinal and transverse joints. Where seams must be oriented across the slope, lap the upper panel over the lower panel. If approved, sewn seams may be used instead of overlapped seams.

3.3 PROTECTION

Protect the geotextile during installation from clogging, tears, and other damage. Damaged geotextile shall be repaired or replaced as directed. Use adequate ballast (e.g. sand bags) to prevent uplift by wind. The geotextile shall not be left uncovered for more than 2 days after installation.

-- End of Section --

This page was intentionally left blank for duplex printing.

SECTION TABLE OF CONTENTS

DIVISION 32 - EXTERIOR IMPROVEMENTS

SECTION 32 01 16.17

COLD MILLING OF BITUMINOUS PAVEMENTS

PART 1 GENERAL

1.1 UNIT PRICES
1.1.1 Measurement
1.1.1.1 Milled Pavement (0"-4" Depth)
1.1.1.1.1 Full Depth Reclamation
1.1.2 Payment
1.1.2.1 Milled Pavement (0"-4" Depth)
1.1.2.1.1 Full Depth Reclamation
1.2 REFERENCES
1.3 QUALITY ASSURANCE
1.3.1 Grade
1.3.2 Surface Smoothness
1.3.3 Traffic Control
1.4 ENVIRONMENTAL REQUIREMENTS

PART 2 MATERIALS

PART 3 EXECUTION

3.1 EXECUTING EQUIPMENT
3.1.1 Cold-Milling Machine
3.1.2 Recycling Equipment (Full Depth Reclamation)
3.1.3 Rollers
3.1.4 Cleaning Equipment
3.1.5 Straightedge
3.2 PREPARATION OF SURFACE
3.3 MILLING OPERATION
3.4 PROCESSING AND LAYDOWN
3.5 COMPACTION AND DESNSITY REQUIREMENTS
3.6 GRADE AND SURFACE-SMOOTHNESS TESTING
3.6.1 Grade-Conformance Tests
3.6.2 Surface-Smoothness Tests
3.7 REMOVAL OF MILLED MATERIAL

-- End of Section Table of Contents --

SECTION 32 01 16.17

COLD MILLING OF BITUMINOUS PAVEMENTS

PART 1 GENERAL

1.1 UNIT PRICES

1.1.1 Measurement

1.1.1.1 Milled Pavement (0"-4" Depth)

The quantity of milled pavement will be the number of square yards completed and accepted as determined by the Contracting Officer. Determine the number of square yards of milled pavement by measuring the length and width of the milled surface within the specified work area. Measurement to determine the area shall be to the closest\inch for width and the closest\foot for length.

1.1.1.1.1 Full Depth Reclamation

The quantity of full depth reclamation will be the number of square yards completed and accepted as determined by the Contracting Officer. Determine the number of square yards of reclaimed pavement by measuring the length and width of the reclaimed surface within the specified work area. Measurement to determine the area shall be to the closest\inch for width and the closest\foot for length.

1.1.2 Payment

1.1.2.1 Milled Pavement (0"-4" Depth)

Payment will be to the nearest square yard inclusive of all costs for milling, removing, hauling, stockpiling, brooming, equipment, labor, and incidentals necessary to satisfactorily complete the work.

1.1.2.1.1 Full Depth Reclamation

Payment will be to the nearest square yard inclusive of all costs for milling, processing, blending, placing, shaping, watering, compacting, equipment, test strips, hauling of excess material, labor, and incidentals necessary to satisfactorily complete the work.

1.2 REFERENCES

The publications listed below form a part of this specification to the extent referenced. The publications are referred to within the text by the basic designation only.

ASTM INTERNATIONAL (ASTM)

ASTM C136/C136M (2014) Standard Test Method for Sieve

Analysis of Fine and Coarse Aggregates

SOUTH DAKOTA DEPARTMENT OF TRANSPORTATION (SDDOT)

1.3 QUALITY ASSURANCE

1.3.1 Grade

Conform the finished milled surfaces to the lines, grades, and cross sections indicated. The finished milled-pavement surfaces shall vary not more than 1/4 inch from the established plan grade line and elevation. Finished surfaces at a juncture with other pavements shall coincide with the finished surfaces of the abutting pavements. The deviations from the plan grade line and elevation will not be permitted in areas of pavements where closer conformance with planned grade and elevation is required for the proper functioning of appurtenant structures involved.

1.3.2 Surface Smoothness

Finished surfaces shall not deviate from the testing edge of a straightedge more than 1/4 inch in the transverse or longitudinal direction.

1.3.3 Traffic Control

Provide all necessary traffic controls during milling operations.

1.4 ENVIRONMENTAL REQUIREMENTS

Milling shall not be performed when there is accumulation of snow or ice on the pavement surface.

PART 2 MATERIALS

The reclaimed asphalt mix and granular base material shall conform to Section 884 of the 2015 SDDOT Standard Specifications for Roads and Bridges.

PART 3 EXECUTION

3.1 EXECUTING EQUIPMENT

3.1.1 Cold-Milling Machine

Provide a cold-milling machine which is self-propelled, capable of milling the pavement to a specified depth and smoothness and of establishing grade control; with means of controlling transverse slope and dust produced during the pavement milling operation. The machine shall have the ability to remove the millings or cuttings from the pavement and load them into a truck. The milling machine shall not cause damage to any part of the pavement structure that is not to be removed.

3.1.2 Recycling Equipment (Full Depth Reclamation)

The equipment shall be self propelled and capable of milling/crushing, processing and blending the asphalt and granular base material to the depth specified in the plans.

3.1.3 Rollers

Pneumatic tired rollers shall have an effective roller weight of 250 pounds per inch of roller width or satisfactory vibratory compaction equipment. Tires shall be uniformly inflated so their air pressures will not vary by more than 5 psi. Rollers shall be operated with tire pressures and wheel loads within the manufacturer's recommended range for the size and ply of the tire being used.

Steel rollers shall furnish a minimum rolling weight of 275 pounds per inch of rolling width.

3.1.4 Cleaning Equipment

Provide cleaning equipment suitable for removing and cleaning loose material from the pavement surface.

3.1.5 Straightedge

Furnish and maintain at the site, in good condition, one 12 foot straightedge or other suitable device for each milling machine, for testing the finished surface. Make straightedge available for Government use. Straightedges shall be constructed of aluminum or other lightweight metal, with blades of box or box-girder cross section with flat bottom reinforced to insure rigidity and accuracy. Straightedges shall have handles to facilitate movement on the pavement.

3.2 PREPARATION OF SURFACE

Clean the pavement surface of excessive dirt, clay, or other foreign material immediately prior to milling the pavement.

3.3 MILLING OPERATION

A minimum of seven days notice is required, prior to start work, for the Contracting Officer to coordinate the milling operation with other activities at the site. Make sufficient passes so that the designated area is milled to the grades and cross sections indicated. The milling shall proceed with care and in depth increments that will not damage the pavement below the designated finished grade. Repair or replace, as directed, items damaged during milling such as manholes, valve boxes, utility lines, pavement that is torn, cracked, gouged, broken, or undercut. The milled material shall be removed from the pavement and loaded into trucks and delivered to specified on site stockpile locations. Removed material shall have a minimum of 95 percent by weight passing a 1" sieve when tested in accordance with ASTM C136/C136M.

3.4 PROCESSING AND LAYDOWN

Full depth reclamation shall consist of milling/crushing, processing and blending the asphalt mix and granular base material and placing, watering, shaping, and compacting the material to the typical section.

Asphalt concrete mix and granular base material shall be processed in place so that a uniform blend is obtained. The material shall be handled to ensure that salvaged material is not lost down the inslope.

The processed material shall be placed in a minimum of two lifts. The maximum lift thickness shall not exceed 4 inches.

The depths of the in place asphalt concrete and granular base material may vary from what is shown in the plans. The Contractor will be responsible for interpreting the depths and including all costs to mill/crush and process the required depth of existing pavement and granular material.

The final rolling of the top surface of the granular materials shall embed as many loose stones as possible. The finished surface shall be smooth and free from waves and the Contractor shall finish the surfacing materials to +/- 0.5% of the typical section cross slope.

The quarter crown within any 12 foot transverse length (or actual lane width paved with a single paver pass) shall not exceed 0.04 feet when measured with a straight edge, stringline, or other suitable equipment. The centerline shall be finished to a transverse distance within +/- 0.25 feet of the plans shown location of centerline.

The Contractor shall conduct operations in such a way that both lanes will be brought up even at the end of each day.

3.5 COMPACTION AND DESNSITY REQUIREMENTS

Compaction and density requirements shall be a minimum of 95% of the target dry density established by SD 219 (2015 SDDOT) and compacted under the following conditions:

1. Material shall have a minimum of 4% moisture uniformly blended throughout the depth of the lift of material. The percent moisture may be adjusted by the COR.

3.6 GRADE AND SURFACE-SMOOTHNESS TESTING

3.6.1 Grade-Conformance Tests

Test the finished milled surface of the pavement for conformance with the plan-grade requirements and for acceptance by the Contracting Officer by running lines of levels at intervals of 50 feet longitudinally and 12 feet transversely to determine the elevation of the completed pavement. Correct variations from the designated grade line and elevation in excess of the plan-grade requirements as directed. Skin patching for correcting low areas will not be permitted. Remove and replace the deficient low area. Remove sufficient material to allow at least 1 inch of asphalt concrete to be placed.

3.6.2 Surface-Smoothness Tests

After completion of the final milling, the finished milled surface will be tested by the Government with a straightedge. Other approved devices may be used, provided that when satisfactorily and properly operated, such devices reveal all surface irregularities exceeding the tolerances specified. Correct surface irregularities that depart from the testing edge by more than 1/4 inch. Skin patching for correcting low areas will not be permitted. Remove and replace the deficient low area. Remove sufficient material to allow at least 1 inch of asphalt concrete to be placed.

3.7 REMOVAL OF MILLED MATERIAL

Material that is removed shall be stockpiled on site at nearest stockpile location to milling operations and in such a manner as to prevent segregation or contamination. Hauling and stockpiling is to be considered incidental to the milling and full depth reclamation unit price bid items.

-- End of Section --

SECTION TABLE OF CONTENTS

DIVISION 32 - EXTERIOR IMPROVEMENTS

SECTION 32 01 17.16

SEALING OF CRACKS IN BITUMINOUS PAVEMENTS

PART 1 GENERAL

1.1 UNIT PRICES
1.1.1 Measurement
1.1.2 Payment
1.2 REFERENCES
1.3 SUBMITTALS
1.4 QUALITY ASSURANCE
1.5 DELIVERY, STORAGE, AND HANDLING
1.6 ENVIRONMENTAL REQUIREMENTS

PART 2 PRODUCTS

2.1 SEALANTS
2.2 BACKUP MATERIALS

PART 3 EXECUTION

3.1 EXECUTING EQUIPMENT
3.1.1 Routing Equipment
3.1.2 Concrete Saw
3.1.3 Air Compressor
3.1.4 Hand Tools
3.1.5 Crack Sealing Equipment
3.2 PREPARATION OF CRACKS
3.2.1 Cracks
3.2.1.1 Hairline Cracks
3.2.1.2 Small Cracks
3.2.1.3 Medium Cracks
3.2.1.4 Large Cracks
3.2.2 Existing Sealant Removal
3.2.3 Routing
3.2.4 Cleaning
3.2.5 Backup Material
3.2.6 Rate of Progress of Crack Preparation
3.3 PREPARATION OF SEALANT
3.4 INSTALLATION OF SEALANT
3.4.1 Time of Application
3.4.2 Sealing the Crack
3.5 CLEANUP
3.6 QUALITY CONTROL PROVISIONS
3.6.1 Crack Cleaning
3.6.2 Crack Seal Application Equipment
3.6.3 Crack Sealant

-- End of Section Table of Contents --

SECTION 32 01 17.16

SEALING OF CRACKS IN BITUMINOUS PAVEMENTS

PART 1 GENERAL

1.1 UNIT PRICES

1.1.1 Measurement

Determine the quantity of each sealing item to be paid for by actual measurement of the number of linear feet of in-place material that has been approved.

1.1.2 Payment

Payment will be made at the contract unit bid prices per linear\foot for the sealing items scheduled. Include in the unit bid prices the cost of all labor, traffic control, materials, and the use of all equipment and tools required to complete the work.

1.2 REFERENCES

The publications listed below form a part of this specification to the extent referenced. The publications are referred to within the text by the basic designation only.

ASTM INTERNATIONAL (ASTM)

ASTM C509	(2006; R 2011) Elastomeric Cellular Preformed Gasket and Sealing Material
ASTM D6690	(2012) Standard Specification for Joint and Crack Sealants, Hot Applied, for Concrete and Asphalt Pavements
ASTM D789	(2007; E 2010) Determination of Relative Viscosity and Moisture Content of Polyamide (PA)

SOUTH DAKOTA DEPARTMENT OF TRANSPORTATION (SDDOT)

1.3 SUBMITTALS

Government approval is required for submittals with a "G" designation; submittals not having a "G" designation are for information only. When used, a designation following the "G" designation identifies the office that will review the submittal for the Government. Submit the following in accordance with Section 01 33 00 SUBMITTAL PROCEDURES:

SD-03 Product Data

Installation of Sealant; G

SD-04 Samples

Materials; G

SD-06 Test Reports

Test Requirements; G

1.4 QUALITY ASSURANCE

Test the crack sealant and backup material, when required, for conformance with the referenced applicable material specification. Furnish samples of materials, in sufficient quantity to be tested upon request. Conformance with the test requirements of the laboratory tests specified will not constitute final acceptance of the materials. Submit reports of all tests. Final acceptance will be based on the performance of the in-place materials.

1.5 DELIVERY, STORAGE, AND HANDLING

Inspect materials delivered to the job site for defects; unload, and store them with a minimum of handling to avoid damage. Provide storage facilities at the job site to protect materials from weather and to maintain them at the temperatures recommended by the manufacturer.

1.6 ENVIRONMENTAL REQUIREMENTS

The ambient air temperature shall be within 40-85 degrees F and the pavement temperature 35 degrees F within the joint wall and rising at the time of application of the materials. Do not apply sealant if moisture is observed in the crack.

PART 2 PRODUCTS

2.1 SEALANTS

Provide sealants conforming to ASTM D6690. Usage of sealing materials for sealing cracks in the various paved areas indicated on the task order.

2.2 BACKUP MATERIALS

Provide backup material that is a compressible, nonshrinking, nonstaining, nonabsorptive material and nonreactive with the crack sealant. The melting point of the backing material shall be at least 5 degrees F greater than the maximum pouring temperature of the sealant being used, when tested in accordance with ASTM D789. The material shall have a water absorption of not more than 5 percent by weight when tested in accordance with ASTM C509. The backup material shall be 25 percent (plus or minus 5 percent) larger in diameter than the nominal width of the crack.

PART 3 EXECUTION

3.1 EXECUTING EQUIPMENT

3.1.1 Routing Equipment

Provide routing equipment which is a self-powered machine operating a power driven tool or bit specifically designed for routing bituminous pavements. The bit shall rotate about a vertical axis at sufficient speed to cut a smooth vertical-walled reservoir in the pavement surface and

shall maintain accurate cutting without damaging the sides or top edges of the reservoir. Provide a router capable of following the trace of the crack without deviation. The use of rotary impact routing devices may be permitted if vertical-sided carbide tipped bits are used.

3.1.2 Concrete Saw

Provide a self-propelled power saw with small diameter (6 inches or less) water-cooled diamond or abrasive saw blades for cutting cracks to the depths and widths specified and for removing filler that is embedded in the cracks or adhered to the crack faces. The diameter of the saw blade shall be small enough to allow the saw to closely follow the trace of the crack.

3.1.3 Air Compressor

Include in the equipment an air compressor, hose, and nozzle. The maximum nozzle opening shall not exceed 3/4 inch. The air compressor shall be portable; and shall be capable of furnishing not less than 125 cfm and maintaining a line pressure of not less than 90 psi at the nozzle while in use. The compressor shall be equipped with traps that will maintain the compressed air free of oil and water.

3.1.4 Hand Tools

Hand tools may be used, when approved, for removing defective sealant from cracks and repairing or cleaning the crack faces.

3.1.5 Crack Sealing Equipment

Provide unit applicators, used for heating and installing the hot-poured crack sealant materials, that are mobile and equipped with a double-boiler, agitator-type kettle with an oil medium in the outer space for heat transfer; a direct-connected pressure-type extruding device with a nozzle shaped for inserting in the crack to be filled; positive temperature devices for controlling the temperature of the transfer oil and sealant; and a recording type thermometer for indicating the temperature of the sealant. Allow the sealant to circulate through the delivery hose and return to the inner kettle when not in use, due to the applicator unit design .

3.2 PREPARATION OF CRACKS

Immediately before the installation of the crack sealant, thoroughly clean the cracks to remove oxidized pavement, loose aggregate and foreign debris. The preparation shall be as follows:

3.2.1 Cracks

3.2.1.1 Hairline Cracks

Cracks that are less than 1/4 inch wide do not need to be sealed .

3.2.1.2 Small Cracks

Cracks that are 1/4 to 3/4 inch wide shall be routed to a nominal width 1/8 inch greater than the existing nominal width and to a depth not less than 3/4 inch, sandblasted, waterblasted, or wire brushed and cleaned using compressed air.

3.2.1.3 Medium Cracks

Cracks that are 3/4 to 2 inches wide shall be sandblasted, waterblasted, or wire brushed and cleaned using compressed air.

3.2.1.4 Large Cracks

Cracks that are greater than 2 inches wide shall be repaired using pothole repair techniques instead of sealing.

3.2.2 Existing Sealant Removal

Cut loose the in-place sealant from both crack faces and to a depth shown on the drawings, using a concrete saw or hand tools as specified. Depth shall be sufficient to accommodate any backup material that is required to maintain the depth of new sealant to be installed. Prior to further cleaning operations, remove all old loose sealant remaining in the crack opening by blowing with compressed air.

3.2.3 Routing

Perform routing of the cracks using a rotary router with a bit that is at least 1/8 inch wider than the nominal width of the crack to remove all residual old sealant (resealing), oxidized pavement and any loose aggregate in the crack wall.

3.2.4 Cleaning

Cleaning shall be accomplished with an air compressor producing a minimum of 125 cubic feet per minute output and equipped with a maximum 3/4 inch nozzle. The air compressors shall be equipped with traps capable of removing all free water and oil from the compressed air. Use a multiple-pass technique until the surfaces are free of dust, dirt, old sealant residue, or foreign debris that might prevent the sealant material from bonding to the asphalt pavement. After final cleaning and immediately prior to sealing, blow out the cracks with compressed air and leave them completely free of debris and water. Ensure that cleaning does not damage the pavement.

3.2.5 Backup Material

Use backup material on all cracks that have a depth greater than 3/4 inch. Insert the backup material into the lower portion of the crack. Ensure that the backup material is placed at the specified depth and is not stretched or twisted during installation.

3.2.6 Rate of Progress of Crack Preparation

Limit the stages of crack preparation, which include routing, sandblasting of the crack faces, air pressure cleaning and placing of the backup material, to only that linear footage that can be sealed during the next 72 hours.

3.3 PREPARATION OF SEALANT

Do not heat hot-poured sealants in excess of the safe heating temperature recommended by the manufacturer, as shown on the sealant containers.

Withdraw and waste sealant that has been overheated or subjected to application temperatures for over 4 hours or that has remained in the applicator at the end of the day's operation.

3.4 INSTALLATION OF SEALANT

3.4.1 Time of Application

Seal cracks immediately following final cleaning of the crack walls and following the placement of the backup material (when required). Cracks that cannot be sealed under the conditions specified, or when rain interrupts sealing operations, shall be recleaned and allowed to dry prior to installing the sealant.

3.4.2 Sealing the Crack

Immediately preceding, but not more than 50 feet ahead of the crack sealing operations, perform a final cleaning with compressed air. Fill the cracks from the bottom up to exceed the pavement surface and shall be squeegeed level with the road surface 1" to 2" on each side of the crack vessel, working from the shoulder to the center of the roadway. The squeegee shall be a "U" shaped device with a wiping surface fabricated from neoprene rubber. Remove excess or spilled sealant from the pavement by approved methods and discard it. Install the sealant in a manner which prevents the formation of voids and entrapped air. Several passes with the applicator wand may be necessary to obtain the specified sealant depth from the pavement surface. Do not use gravity methods or pouring pots to install the sealant material. Traffic shall not be permitted over newly sealed pavement until authorized by the Contracting Officer. Cracks shall be checked frequently to ensure that the newly installed sealant is cured to a tack-free condition within 3 hours. A blotting material, such as toilet tissue, or an approved de-tacking agent shall be placed over the sealant material immediately after placement at intersections, superelevated curves, urban areas, grades steeper than 4%, and other locations specified on the plans. Blotting material or an approved de-tacking agent will be required when traffic is allowed to cross a sealed area before track free status has been achieved.

3.5 CLEANUP

Upon completion of the project, remove unused materials from the site and leave the pavement in a clean condition.

3.6 QUALITY CONTROL PROVISIONS

3.6.1 Crack Cleaning

Provide quality control provisions during the crack cleaning process to correct improper equipment and cleaning techniques that damage the bituminous pavement in any manner. Cleaned cracks shall be approved prior to installation of the crack sealant.

3.6.2 Crack Seal Application Equipment

Inspect the application equipment to ensure conformance to temperature requirements and proper installation. Evidences of bubbling, improper installing, and failing to cure or set will cause to suspend operations until causes of the deficiencies are determined and corrected.

3.6.3 Crack Sealant

Inspect the crack sealant for proper cure and set rating, bonding to the bituminous pavement, cohesive separation within the sealant, reversion to liquid, and entrapped air and voids. Sealants exhibiting any of these deficiencies, at any time prior to the final acceptance of the project, shall be removed from the crack, wasted, and replaced as specified herein at no additional cost to the Government.

-- End of Section --

SECTION TABLE OF CONTENTS

DIVISION 32 - EXTERIOR IMPROVEMENTS

SECTION 32 11 23

AGGREGATE AND/OR GRADED-CRUSHED AGGREGATE BASE COURSE

PART 1 GENERAL

1.1 UNIT PRICES
1.1.1 Measurement
1.1.1.1 Area
1.1.1.2 Volume
1.1.1.3 Weight
1.1.2 Payment for Quantities
1.1.3 Payment for Stabilization of Underlying Course
1.1.4 Waybills and Delivery Tickets
1.2 REFERENCES
1.3 DEFINITIONS
1.3.1 Aggregate Base Course
1.3.2 Graded-Crushed Aggregate Base Course
1.3.3 Degree of Compaction
1.4 SUBMITTALS
1.5 QUALITY ASSURANCE
1.5.1 Sampling
1.5.2 Tests
1.5.2.1 Sieve Analysis
1.5.2.2 Liquid Limit and Plasticity Index
1.5.2.3 Moisture-Density Determinations
1.5.2.4 Field Density Tests
1.5.2.5 Wear Test
1.5.2.6 Soundness
1.5.2.7 Weight of Slag
1.5.3 Testing Frequency
1.5.3.1 Initial Tests
1.5.3.2 In Place Tests
1.6 ENVIRONMENTAL REQUIREMENTS

PART 2 PRODUCTS

2.1 PLANT, EQUIPMENT, AND TOOLS
2.2 AGGREGATES
2.2.1 Coarse Aggregate
2.2.1.1 Aggregate Base Course
2.2.1.2 Graded-Crushed Aggregate Base Course
2.2.2 Fine Aggregate
2.2.2.1 Aggregate Base Course
2.2.2.2 Graded-Crushed Aggregate Base Course
2.2.3 Gradation Requirements
2.3 LIQUID LIMIT AND PLASTICITY INDEX

PART 3 EXECUTION

3.1 GENERAL REQUIREMENTS
3.2 OPERATION OF AGGREGATE SOURCES
3.3 STOCKPILING MATERIAL
3.4 PREPARATION OF UNDERLYING COURSE
3.5 INSTALLATION
3.5.1 Mixing the Materials
3.5.2 Placing
3.5.3 Grade Control
3.5.4 Edges of Base Course
3.5.5 Compaction
3.5.6 Thickness
3.5.7 Proof Rolling
3.5.8 Finishing
3.5.9 Smoothness
3.6 TRAFFIC
3.7 MAINTENANCE
3.8 DISPOSAL OF UNSATISFACTORY MATERIALS

-- End of Section Table of Contents --

SECTION 32 11 23

AGGREGATE AND/OR GRADED-CRUSHED AGGREGATE BASE COURSE

PART 1 GENERAL

1.1 UNIT PRICES

1.1.1 Measurement

1.1.1.1 Area

Measure the quantity of ABC and GCA completed and accepted, as determined by the Contracting Officer, in square yards.

1.1.1.2 Volume

Measure the quantity of ABC and GCA completed and accepted, as determined by the Contracting Officer, in cubic yards. The volume of material in-place and accepted will be determined by the average job thickness obtained in accordance with paragraph THICKNESS and the dimensions shown.

1.1.1.3 Weight

The tonnage of ABC and GCA material will be the number of tons of aggregate, placed and accepted in the completed course plus the amount placed in authorized stockpiles, as determined by the Contracting Officer. Deductions shall be made for any material wasted, unused, rejected, or used for convenience of the Contractor, and for water exceeding specified amount at time of weighing.

1.1.2 Payment for Quantities

Quantities of ABC and GCA, determined as specified above, will be paid for at the respective contract unit prices, which shall constitute full compensation for the construction and completion of the ABC and GCA.

1.1.3 Payment for Stabilization of Underlying Course

Stabilization of cohesionless subgrade or subbase courses, as specified in paragraph PREPARATION OF UNDERLYING COURSE, will be paid for as a special item on a tonnage basis. This tonnage price will include the price of extra manipulation as required.

1.1.4 Waybills and Delivery Tickets

Before the final statement is allowed, file certified waybills and certified delivery tickets for all aggregates actually used, as specified in the Submittals paragraph.

1.2 REFERENCES

The publications listed below form a part of this specification to the extent referenced. The publications are referred to in the text by basic designation only.

ASTM INTERNATIONAL (ASTM)

ASTM C131/C131M	(2014) Standard Test Method for Resistance to Degradation of Small-Size Coarse Aggregate by Abrasion and Impact in the Los Angeles Machine
ASTM C29/C29M	(2009) Standard Test Method for Bulk Density ("Unit Weight") and Voids in Aggregate
ASTM C88	(2013) Standard Test Method for Soundness of Aggregates by Use of Sodium Sulfate or Magnesium Sulfate
ASTM D1556	(2007) Density and Unit Weight of Soil in Place by the Sand-Cone Method
ASTM D1557	(2012) Standard Test Methods for Laboratory Compaction Characteristics of Soil Using Modified Effort (56,000 ft-lbf/ft3) (2700 kN-m/m3)
ASTM D2167	(2008) Density and Unit Weight of Soil in Place by the Rubber Balloon Method
ASTM D2487	(2011) Soils for Engineering Purposes (Unified Soil Classification System)
ASTM D4318	(2010; E 2014) Liquid Limit, Plastic Limit, and Plasticity Index of Soils
ASTM D5821	(2013) Standard Test Method for Determining the Percentage of Fractured Particles in Coarse Aggregate
ASTM D6938	(2010) Standard Test Method for In-Place Density and Water Content of Soil and Soil-Aggregate by Nuclear Methods (Shallow Depth)
ASTM D75/D75M	(2014) Standard Practice for Sampling Aggregates
ASTM E11	(2013) Wire Cloth and Sieves for Testing Purposes

SOUTH DAKOTA DEPARTMENT OF TRANSPORTATION (SDDOT)

1.3 DEFINITIONS

For the purposes of this specification, the following definitions apply.

1.3.1 Aggregate Base Course

Aggregate base course (ABC) is well graded, durable aggregate uniformly moistened and mechanically stabilized by compaction.

1.3.2 Graded-Crushed Aggregate Base Course

Graded-crushed aggregate (GCA) base course is well graded, crushed, durable aggregate uniformly moistened and mechanically stabilized by compaction. GCA is similar to ABC, but it has more stringent requirements and it produces a base course with higher strength and stability.

1.3.3 Degree of Compaction

Degree of compaction required shall be in compliance with 2015 SDDOT 260.3B.

1.4 SUBMITTALS

Government approval is required for submittals with a "G" designation; submittals not having a "G" designation are for information only. When used, a designation following the "G" designation identifies the office that will review the submittal for the Government. Submit the following in accordance with Section 01 33 00 SUBMITTAL PROCEDURES:

SD-03 Product Data

Plant, Equipment, and Tools; G

Waybills and Delivery Tickets; G

SD-06 Test Reports

Sampling and Testing; G

Field Density Tests; G

1.5 QUALITY ASSURANCE

Sampling and testing are the responsibility of the Contractor and performed by a cerified testing laboratory approved in accordance with Section 01 45 00 QUALITY CONTROL. Work requiring testing will not be permitted until the testing laboratory has been inspected and approved. Test the materials to establish compliance with the specified requirements; perform testing at the specified frequency. The Contracting Officer may specify the time and location of the tests. Furnish copies of test results to the Contracting Officer within 24 hours of completion of the tests.

1.5.1 Sampling

Take samples for laboratory testing in conformance with ASTM D75/D75M. When deemed necessary, the sampling will be observed by the Contracting Officer.

1.5.2 Tests

Perform the following tests in conformance with the applicable standards listed.

1.5.2.1 Sieve Analysis

Shall comply with 2015 SDDOT 882.2.

1.5.2.2 Liquid Limit and Plasticity Index

Determine liquid limit and plasticity index in accordance with ASTM D4318. Shall comply with 2015 SDDOT 882.3

1.5.2.3 Moisture-Density Determinations

Determine the laboratory maximum dry density and optimum moisture content in accordance with ASTM D1557 .

1.5.2.4 Field Density Tests

Measure field density in accordance with ASTM D1556, ASTM D2167 or ASTM D6938. For the method presented in ASTM D6938 check the calibration curves and adjust them, if necessary, using only the sand cone method as described in paragraph Calibration, of the ASTM publication. Tests performed in accordance with ASTM D6938 result in a wet unit weight of soil, and ASTM D6938 shall be used to determine the moisture content of the soil. The calibration curves furnished with the moisture gauges shall also be checked along with density calibration checks as described in ASTM D6938. The calibration checks of both the density and moisture gauges shall be made by the prepared containers of material method, as described in paragraph Calibration of ASTM D6938, on each different type of material being tested at the beginning of a job and at intervals as directed.

a. Submit certified copies of test results for approval not less than 10 days before material is required for the work.

b. Submit calibration curves and related test results prior to using the device or equipment being calibrated.

c. Submit copies of field test results within 3 days after the tests are performed.

1.5.2.5 Wear Test

Perform wear tests on ABC and GCA course material in conformance with ASTM C131/C131M.

1.5.2.6 Soundness

Perform soundness tests on GCA in accordance with ASTM C88.

1.5.2.7 Weight of Slag

Determine weight per cubic foot of slag in accordance with ASTM C29/C29M on the ABC and GCA course material.

1.5.3 Testing Frequency

1.5.3.1 Initial Tests

Perform one of each of the following tests, on the proposed material prior to commencing construction, to demonstrate that the proposed material meets all specified requirements when furnished. If materials from more than one source are going to be utilized, this testing shall be completed for each source.

a. Sieve Analysis.

b. Liquid limit and plasticity index.

c. Moisture-density relationship.

d. Wear.
e. Soundness.

1.5.3.2 In Place Tests

Perform each of the following tests on samples taken from the placed and compacted ABC and GCA. Samples shall be taken and tested at the rates indicated.

a. Perform density tests on every lift of material placed and at a frequency of one set of tests for every 1500 square yards , or portion thereof, of completed area.

b. Perform sieve analysis on every lift of material placed and at a frequency of one sieve analysis for every ,source delivered.

c. Perform liquid limit and plasticity index tests at the same frequency as the sieve analysis.

1.6 ENVIRONMENTAL REQUIREMENTS

Perform construction when the atmospheric temperature is above 35 degrees F. When the temperature falls below 35 degrees F, protect all completed areas by approved methods against detrimental effects of freezing. Correct completed areas damaged by freezing, rainfall, or other weather conditions to meet specified requirements.

PART 2 PRODUCTS

2.1 PLANT, EQUIPMENT, AND TOOLS

All plant, equipment, and tools used in the performance of the work will be subject to approval before the work is started and shall be maintained in satisfactory working condition at all times. Submit a list of proposed equipment, including descriptive data. Provide adequate equipment having the capability of producing the required compaction, meeting grade controls, thickness control, and smoothness requirements as set forth herein.

2.2 AGGREGATES

Provide aggregate consisting of clean, sound, durable particles of crushed stone, crushed slag, crushed gravel, angular sand, or other approved material. GCA shall be free of silt and clay as defined by ASTM D2487, organic matter, and other objectionable materials or coatings. The portion retained on the No. 4 sieve is known as coarse aggregate; that portion passing the No. 4 sieve is known as fine aggregate.

2.2.1 Coarse Aggregate

Provide coarse aggregates with angular particles of uniform density. When the coarse aggregate is supplied from more than one source, aggregate from each source shall meet the specified requirements and shall be stockpiled

separately.

a. Crushed Gravel: Crushed gravel manufactured by crushing gravels, and meets all the requirements specified below.

b. Crushed Stone: Provide crushed stone consisting of freshly mined quarry rock, meeting all the requirements specified below.

2.2.1.1 Aggregate Base Course

ABC coarse aggregate shall not show more than 50 percent loss when subjected to the Los Angeles abrasion test in accordance with ASTM C131/C131M. The amount of flat and elongated particles shall not exceed 30 percent. A flat particle is one having a ratio of width to thickness greater than 3; an elongated particle is one having a ratio of length to width greater than 3. In the portion retained on each sieve specified, the crushed aggregates shall contain at least 50 percent by weight of crushed pieces having two or more freshly fractured faces determined in accordance with ASTM D5821. When two fractures are contiguous, the angle between planes of the fractures must be at least 30 degrees in order to count as two fractured faces. Crushed gravel shall be manufactured from gravel particles 50 percent of which, by weight, are retained on the maximum size sieve listed in TABLE 1.

2.2.1.2 Graded-Crushed Aggregate Base Course

GCA coarse aggregate shall not show more than 50 percent loss when subjected to the Los Angeles abrasion test in accordance with ASTM C131/C131M. GCA coarse aggregate shall not exhibit a loss greater than 18 percent weighted average, at five cycles, when tested for soundness in magnesium sulfate, or 12 percent weighted average, at five cycles, when tested in sodium sulfate in accordance with ASTM C88. The amount of flat and elongated particles shall not exceed 20 percent for the fraction retained on the 1/2 inch sieve nor 20 percent for the fraction passing the 1/2 inch sieve. A flat particle is one having a ratio of width to thickness greater than 3; an elongated particle is one having a ratio of length to width greater than 3. In the portion retained on each sieve specified, the crushed aggregate shall contain at least 90 percent by weight of crushed pieces having two or more freshly fractured faces determined in accordance with ASTM D5821. When two fractures are contiguous, the angle between planes of the fractures must be at least 30 degrees in order to count as two fractured faces. Crushed gravel shall be manufactured from gravel particles 90 percent of which by weight are retained on the maximum size sieve listed in TABLE 1.

2.2.2 Fine Aggregate

Fine aggregates shall be angular particles of uniform density. When the fine aggregate is supplied from more than one source, aggregate from each source shall meet the specified requirements.

2.2.2.1 Aggregate Base Course

ABC fine aggregate shall consist of screenings, angular sand, crushed recycled concrete fines, or other finely divided mineral matter processed or naturally combined with the coarse aggregate.

2.2.2.2 Graded-Crushed Aggregate Base Course

Provide GCA fine aggregate consisting of angular particles produced by crushing stone, slag, or gravel that meets the requirements for wear and soundness specified for GCA coarse aggregate. Fine aggregate shall be produced by crushing only particles larger than No. 4 sieve in size. The fine aggregate shall contain at least 90 percent by weight of particles having two or more freshly fractured faces in the portion passing the No. 4 sieve and retained on the No. 10 sieve, and in the portion passing the No. 10 sieve and retained on the No. 40 sieve. Fine aggregate shall be manufactured from gravel particles 95 percent of which by weight are retained on the 1/2 inch sieve.

2.2.3 Gradation Requirements

Apply the specified gradation requirements to the completed base course. The aggregates shall be continuously well graded within the limits specified in TABLE 1. Sieves shall conform to ASTM E11.

REQUIREMENT	Gravel Surfacing	Aggregate Base Course
Sieve	Percent Passing	
6 inch		
2 inch		
1 inch		100
3/4 inch	100	80-100
1/2 inch		68-91
#4	50-78	46-70
#8	37-67	34-58
#40	13-35	13-35
#200	4.0-15.0	3.0-12
Other Properties		
Liquid Limit (max)		25
Plasticity Index	4-12	0-6

REQUIREMENT	Gravel Surfacing	Aggregate Base Course
LA Abrasion Loss (maximum)	40	40
Crushed Particles (minimum) +#4 Sieve	30% 1-CF	30% 1-CF
Foot Notes		*1,*2

*1 The fraction passing the #200 sieve shall not be greater than 2/3 of the fraction passing the #40 sieve. In no case shall the upper limit specified for the #200 sieve be exceeded.
*2 Requirements apply to ledge rock other than limestone ledge rock.
*3 Acceptance of pit run will be by visual inspection. The Engineer may require a sieve analysis to verify the material meets the specified gradation. Independent Assurance will not be required.

FINE AGGREGATE	
Sieve Size	Percent Passing
3/8 inch	100
#4	95 - 100
#16	45-85
#50	10-30
#100	2-10

The fine aggregate shall conform to section 800 of the SDDOT Standard Specifications for Roads and Bridges (2015).

2.3 LIQUID LIMIT AND PLASTICITY INDEX

Apply liquid limit and plasticity index requirements to the completed course and to any component that is blended to meet the required gradation. The portion of any component or of the completed course passing the No. 40 sieve shall be either nonplastic or have a liquid limit not greater than 25 and a plasticity index not greater than 5.

PART 3 EXECUTION

3.1 GENERAL REQUIREMENTS

When the ABC or GCA is constructed in more than one layer, clean the previously constructed layer of loose and foreign matter by sweeping with power sweepers or power brooms, except that hand brooms may be used in

areas where power cleaning is not practicable. Provide adequate drainage during the entire period of construction to prevent water from collecting or standing on the working area. Provide line and grade stakes as necessary for control. Grade stakes shall be in lines parallel to the centerline of the area under construction and suitably spaced for string lining.

3.2 OPERATION OF AGGREGATE SOURCES

Clearing, stripping, and excavating are the responsibility of the Contractor. Operate the aggregate sources to produce the quantity and quality of materials meeting the specified requirements in the specified time limit. Upon completion of the work, the aggregate sources on Government property shall be conditioned to drain readily and shall be left in a satisfactory condition. Aggregate sources on private lands shall be conditioned in agreement with local laws or authorities.

3.3 STOCKPILING MATERIAL

Clear and level storage sites prior to stockpiling of material. Stockpile all materials, including approved material available from excavation and grading, in the manner and at the locations designated. Aggregates shall be stockpiled on the cleared and leveled areas designated by the Contracting Officer to prevent segregation. Materials obtained from different sources shall be stockpiled separately.

3.4 PREPARATION OF UNDERLYING COURSE

Prior to constructing the base course(s), the underlying course or subgrade shall be cleaned of all foreign substances. At the time of construction of the base course(s), the underlying course shall contain no frozen material. The surface of the underlying course or subgrade shall meet specified compaction and surface tolerances. The underlying course shall conform to Section 31 00 00 EARTHWORK . Ruts or soft yielding spots in the underlying courses, areas having inadequate compaction, and deviations of the surface from the requirements set forth herein shall be corrected by loosening and removing soft or unsatisfactory material and by adding approved material, reshaping to line and grade, and recompacting to specified density requirements. For cohesionless underlying courses containing sands or gravels, as defined in ASTM D2487, the surface shall be stabilized prior to placement of the base course(s). Stabilization shall be accomplished by mixing ABC orGCA into the underlying course and compacting by approved methods. The stabilized material shall be considered as part of the underlying course and shall meet all requirements of the underlying course. The finished underlying course shall not be disturbed by traffic or other operations and shall be maintained in a satisfactory condition until the base course is placed.

3.5 INSTALLATION

3.5.1 Mixing the Materials

Mix the coarse and fine aggregates in a stationary plant, or in a traveling plant or bucket loader on an approved paved working area. Make adjustments in mixing procedures or in equipment, as directed, to obtain true grades, to minimize segregation or degradation, to obtain the required water content, and to insure a satisfactory base course meeting all requirements of this specification.

3.5.2 Placing

Place the mixed material on the prepared subgrade or subbase in layers of uniform thickness with an approved spreader. When a compacted layer 6 inches or less in thickness is required, place the material in a single layer. When a compacted layer in excess of 6 inches is required, place the material in layers of equal thickness. No layer shall be thicker than 6 inches or thinner than 3 inches when compacted. The layers shall be so placed that when compacted they will be true to the grades or levels required with the least possible surface disturbance. Where the base course is placed in more than one layer, the previously constructed layers shall be cleaned of loose and foreign matter by sweeping with power sweepers, power brooms, or hand brooms, as directed. Such adjustments in placing procedures or equipment shall be made as may be directed to obtain true grades, to minimize segregation and degradation, to adjust the water content, and to insure an acceptable base course.

3.5.3 Grade Control

The finished and completed base course shall conform to the lines, grades, and cross sections shown. Underlying material(s) shall be excavated and prepared at sufficient depth for the required base course thickness so that the finished base course and the subsequent surface course will meet the designated grades.

3.5.4 Edges of Base Course

The base course(s) shall be placed so that the completed section will be a minimum of 2 feet wider, on all sides, than the next layer that will be placed above it. Additionally, place approved fill material along the outer edges of the base course in sufficient quantities to compact to the thickness of the course being constructed, or to the thickness of each layer in a multiple layer course, allowing in each operation at least a 2 foot width of this material to be rolled and compacted simultaneously with rolling and compacting of each layer of base course. If this base course material is to be placed adjacent to another pavement section, then the layers for both of these sections shall be placed and compacted along this edge at the same time.

3.5.5 Compaction

Compact each layer of the base course, as specified, with approved compaction equipment. Maintain water content during the compaction procedure to within plus or minus 2 percent of the optimum water content determined from laboratory tests as specified in this Section. Begin rolling at the outside edge of the surface and proceed to the center, overlapping on successive trips at least one-half the width of the roller. Alternate trips of the roller shall be slightly different lengths. Speed of the roller shall be such that displacement of the aggregate does not occur. In all places not accessible to the rollers, the mixture shall be compacted with hand-operated power tampers. Continue compaction until each layer has a degree of compaction that is at least 97 percent of laboratory maximum density through the full depth of the layer. Make such adjustments in compacting or finishing procedures as may be directed to obtain true grades, to minimize segregation and degradation, to reduce or increase water content, and to ensure a satisfactory base course. Any materials that are found to be unsatisfactory shall be removed and replaced with satisfactory material or reworked, as directed, to meet the requirements of this specification.

3.5.6 Thickness

Construct the compacted thickness of the base course as indicated. No individual layer shall be thicker than 6 inches nor be thinner than 3 inches in compacted thickness. The total compacted thickness of the base course(s) shall be within 1/2 inch of the thickness indicated. Where the measured thickness is more than 1/2 inch deficient, correct such areas by scarifying, adding new material of proper gradation, reblading, and recompacting as directed. Where the measured thickness is more than 1/2 inch thicker than indicated, the course shall be considered as conforming to the specified thickness requirements. Average job thickness shall be the average of all thickness measurements taken for the job, but shall be within 1/4 inch of the thickness indicated. The total thickness of the base course shall be measured at intervals in such a manner as to ensure one measurement for each 500 square yards of base course. Measurements shall be made in 3 inch diameter test holes penetrating the base course.

3.5.7 Proof Rolling

Proof rolling of the areas indicated shall be in addition to the compaction specified and shall consist of the application of sufficient coverages to achieve desired compaction with a heavy pneumatic-tired roller having four or more tires, each loaded to a minimum of 30,000 pounds and inflated to a minimum of 125 psi. In areas designated, apply proof rolling to the top of the underlying material on which the base course is laid and to each layer of base course top of the completed ABC or GCA course. Maintain water content of the underlying material at optimum or at the percentage directed from start of compaction to completion of proof rolling of that layer. Water content of each layer of the base course shall be maintained at the optimum percentage directed from start of compaction to completion of proof rolling. Any base course materials or any underlying materials that produce unsatisfactory results by proof rolling shall be removed and replaced with satisfactory materials, recompacted and proof rolled to meet these specifications.

3.5.8 Finishing

The surface of the top layer of base course shall be finished after final compaction by cutting any overbuild to grade and rolling with a steel-wheeled roller. Thin layers of material shall not be added to the top layer of base course to meet grade. If the elevation of the top layer of base course is 1/2 inch or more below grade, then the top layer should be scarified to a depth of at least 3 inches and new material shall be blended in and compacted to bring to grade. Adjustments to rolling and finishing procedures shall be made as directed to minimize segregation and degradation, obtain grades, maintain moisture content, and insure an acceptable base course. Should the surface become rough, corrugated, uneven in texture, or traffic marked prior to completion, the unsatisfactory portion shall be scarified, reworked and recompacted or it shall be replaced as directed.

3.5.9 Smoothness

The surface of the top layer shall show no deviations in excess of 3/8 inch when tested with a 12 foot straightedge. Take measurements in successive positions parallel to the centerline of the area to be paved. Measurements shall also be taken perpendicular to the centerline at 100 foot intervals. Deviations exceeding this amount shall be corrected by

removing material and replacing with new material, or by reworking existing material and compacting it to meet these specifications.

3.6 TRAFFIC

Completed portions of the base course may be opened to limited traffic, provided there is no marring or distorting of the surface by the traffic. Heavy equipment shall not be permitted except when necessary to construction, and then the area shall be protected against marring or damage to the completed work.

3.7 MAINTENANCE

Maintain the base course in a satisfactory condition until the full pavement section is completed and accepted. Maintenance shall include immediate repairs to any defects and shall be repeated as often as necessary to keep the area intact. Any base course that is not paved over prior to the onset of winter, shall be retested to verify that it still complies with the requirements of this specification. Any area of base course that is damaged shall be reworked or replaced as necessary to comply with this specification.

3.8 DISPOSAL OF UNSATISFACTORY MATERIALS

Dispose of any unsuitable materials that must be removed outside the limits of Government-controlled land . No additional payments will be made for materials that must be replaced.

-- End of Section --

270: PROCESSING, AND STOCKPILING GRANULAR BASE AND ASPHALT CONCRETE MIX MATERIAL

270.1 DESCRIPTION

The work includes all material, equipment and labor used for crushing and stockpiling as per specifications. Work also includes all necessary operations to load crusher, crush, and stockpile all asphalt mix material located at USACE Oahe gravel pit. See specification section 32 11 23 titled: Aggregate Material.

270.2 MATERIALS

Salvaged material will meet the requirements of Section 884 of the 2025 South Dakota Standard Specification for Road and Bridges.

270.3 CONSTRUCTION REQUIREMENTS

A. Stockpile Asphalt mix and Granular Base Material:

1) Stockpiling: Asphalt concrete mix and granular material will be processed or crushed and stockpiled together so that a uniform blend is obtained. The salvaged material may be stockpiled at contractor provided sites. Prior to stockpiling, the stockpile site will be prepared by removal of the top 6 inches of topsoil and the area bladed smooth.

B. Stockpile Asphalt Mix Material:

1) Stockpiling: Salvaged asphalt mix material will be processed or crushed and stockpiled so a uniform blend is obtained. Prior to stockpiling, the stockpile site will be prepared by removal of the top 6 inches of topsoil and the area bladed smooth. Stockpiles will be constructed in accordance with Section 320.3 C. The stockpiles will not contain dirt, grease, oil, brick, paving fabric, clay balls, organic debris, and other foreign material.

Salvage and Stockpile Asphalt Mix and Granular Base Material: Asphalt mix and granular base material salvaged and placed into a stockpile will conform to the following gradation:

Sieve Size	**Percent Passing**
1½ inch	100
1 inch	95 – 100

270.4 MEASUREMENT

Per ton. Crushing Asphalt Mix Material (Stockpiled) will be measured for payment by the number of tons of material satisfactorily crushed and stockpiled as specified. Material weighed: (1) on public or private scales which have been certified by the State. The Contractor shall furnish the Government Inspector a copy of each printed weigh bill when

self printing scales are used, or a copy signed by a public or bonded weigh master as each load is delivered; or (2) material may be weighed on the Contractor-furnished scales under the supervision of the Government Inspector. (3) material may be weighed using a loader scale that is calibrated on a weekly basis and the calibration ticket must be submitted to the government. Each printed weigh bill shall contain the following: date, time, unit number, gross, tare and net weight, name of project, contractor, contract number and signature of
bonded weigh master. All material shall be weighed to the nearest 20
pounds and the net weight reduced to the nearest hundredth of a ton.

270.5 PAYMENT

Payment for crushed asphalt mix material (stockpiled) shall be based on the unit price per ton as indicated on the Bidding Schedule multiplied by the number of tons needed to complete the required work according to drawings and specifications.

SECTION TABLE OF CONTENTS

DIVISION 32 - EXTERIOR IMPROVEMENTS

SECTION 32 12 16

HOT-MIX ASPHALT (HMA) FOR ROADS

PART 1 GENERAL

1.1 UNIT PRICES
1.1.1 Method of Measurement
1.1.2 Basis of Payment
1.1.2.1 Hot Mix Asphalt
1.1.2.1.1 Asphalt Pothole Repair
1.1.3 In-place Density
1.1.4 Payment Adjustment for Smoothness
1.1.4.1 Straightedge Testing
1.1.4.2 Bumps ("Must Grind" Areas)
1.2 REFERENCES
1.3 SUBMITTALS
1.4 ENVIRONMENTAL REQUIREMENTS

PART 2 PRODUCTS

2.1 SYSTEM DESCRIPTION
2.1.1 Asphalt Mixing Plant
2.1.1.1 Truck Scales
2.1.1.2 Testing Facilities
2.1.2 Hauling Equipment
2.1.3 Asphalt Pavers
2.1.3.1 Receiving Hopper
2.1.3.2 Automatic Grade Controls
2.1.4 Rollers
2.2 AGGREGATES
2.2.1 Coarse Aggregate
2.2.2 Fine Aggregate
2.2.3 Aggregate Gradation
2.3 ASPHALT CEMENT BINDER
2.4 MIX DESIGN
2.4.1 JMF Requirements
2.4.2 Adjustments to Field JMF

PART 3 EXECUTION

3.1 PREPARATION OF ASPHALT BINDER MATERIAL
3.2 PREPARATION OF MINERAL AGGREGATE
3.3 PREPARATION OF HOT-MIX ASPHALT MIXTURE
3.4 PREPARATION OF THE UNDERLYING SURFACE
3.5 TESTING LABORATORY
3.6 TRANSPORTING AND PLACING
3.6.1 Transporting
3.6.2 Placing
3.7 COMPACTION OF MIXTURE

3.8 JOINTS
3.8.1 Transverse Joints
3.8.2 Longitudinal Joints
3.9 QUALITY CONTROL
3.9.1 General Quality Control Requirements
3.9.2 Quality Control Testing
3.9.2.1 Asphalt Content
3.9.2.2 Gradation
3.9.2.3 Aggregate Moisture
3.9.2.4 Moisture Content of Mixture
3.9.2.5 Laboratory Air Voids, Marshall Stability and Flow
3.9.2.6 In-Place Density
3.9.2.7 Grade and Smoothness
3.9.2.8 Additional Testing
3.9.2.9 QC Monitoring
3.9.3 Sampling
3.10 MATERIAL ACCEPTANCE
3.10.1 Sublot Sampling
3.10.2 Additional Sampling and Testing
3.10.3 Grade
3.10.4 Surface Smoothness
3.10.4.1 Smoothness Requirements
3.10.4.1.1 Straightedge Testing
3.10.4.2 Testing Method
3.10.4.2.1 Straightedge Testing

-- End of Section Table of Contents --

SECTION 32 12 16

HOT-MIX ASPHALT (HMA) FOR ROADS

PART 1 GENERAL

1.1 UNIT PRICES

1.1.1 Method of Measurement

The amount paid for hot mix asphalt will be the number of short tons of hot-mix asphalt mixture used in the accepted work. The amount paid for asphalt pothole repair will be the number of square feet of repair. Weigh hot-mix asphalt mixture after mixing, and no separate payment will be made for weight of asphalt cement material incorporated herein.

1.1.2 Basis of Payment

1.1.2.1 Hot Mix Asphalt

Quantities of hot-mix asphalt mixtures, determined as specified above, will be paid for at respective contract unit prices or at reduced prices adjusted in accordance with paragraphs MATERIAL ACCEPTANCE. Payment will constitute full compensation for furnishing all materials, equipment, plant, and tools; and for all labor, traffic control, and other incidentals necessary to complete work required by this section of the specification.

1.1.2.1.1 Asphalt Pothole Repair

Quantities of asphalt pothole repair will be paid for at respective contract unit prices. Payment will constitute full compensation for furnishing all materials, bedding material, equipment, plant, and tools; and for all labor, traffic control, and other incidentals necessary to complete work required by this section of the specification.

1.1.3 In-place Density

For determining in-place density, one random core (4 inches or 6 inches in diameter) will be taken by the contractor from the mat (interior of the lane) of each sublot, and one random core will be taken from the joint (immediately over joint) of each sublot. Each random core will be full thickness of the layer being placed. When the random core is less than 1 inch thick, it will not be included in the analysis. In this case, another random core will be taken. After air drying to a constant weight, cores obtained from the mat and from the joints will be used for in-place density determination. In place density shall be in accordance with 2015 SDDOT section 321.3C.

1.1.4 Payment Adjustment for Smoothness

1.1.4.1 Straightedge Testing

Record location and deviation from straightedge for all measurements. When between 5.0 and 10.0 percent of all measurements made within a lot

exceed the tolerance specified in paragraph Smoothness Requirements above, after any reduction of high spots or removal and replacement, the computed pay factor for that lot based on surface smoothness, will be 95 percent. When more than 10.0 percent of all measurements exceed the tolerance, the computed pay factor will be 90 percent. When between 15.0 and 20.0 percent of all measurements exceed the tolerance, the computed pay factor will be 75 percent. When 20.0 percent or more of the measurements exceed the tolerance, the lot shall be removed and replaced at no additional cost to the Government. Regardless of the above, any small individual area with surface deviation which exceeds the tolerance given above by more than 50 percent, shall be corrected by diamond grinding to meet the specification requirements above or shall be removed and replaced at no additional cost to the Government.

1.1.4.2 Bumps ("Must Grind" Areas)

Any bumps ("must grind" areas) shown on the profilograph trace which exceed 0.3 inch in height shall be reduced by diamond grinding until they do not exceed 0.3 inch when retested. Such grinding shall be tapered in all directions to provide smooth transitions to areas not requiring grinding. The following will not be permitted: (1) skin patching for correcting low areas, (2) planing or milling for correcting high areas. At the Contractor's option, pavement areas, including ground areas, may be rechecked with the profilograph in order to record a lower Profile Index.

1.2 REFERENCES

The publications listed below form a part of this specification to the extent referenced. The publications are referred to within the text by the basic designation only.

AMERICAN ASSOCIATION OF STATE HIGHWAY AND TRANSPORTATION OFFICIALS (AASHTO)

AASHTO M 156	(2013) Standard Specification for Requirements for Mixing Plants for Hot-Mixed, Hot-Laid Bituminous Paving Mixtures

ASPHALT INSTITUTE (AI)

AI MS-2	(1997 6th Ed) Mix Design Methods
AI SP-2	(2001; 3rd Ed) Superpave Mix Design

ASTM INTERNATIONAL (ASTM)

ASTM C136/C136M	(2014) Standard Test Method for Sieve Analysis of Fine and Coarse Aggregates
ASTM C566	(2013) Standard Test Method for Total Evaporable Moisture Content of Aggregate by Drying
ASTM D1461	(2011) Moisture or Volatile Distillates in Bituminous Paving Mixtures
ASTM D2489/D2489M	(2008) Estimating Degree of Particle Coating of Bituminous-Aggregate Mixtures

ASTM D2950/D2950M	(2014) Density of Bituminous Concrete in Place by Nuclear Methods
ASTM D3665	(2012) Random Sampling of Construction Materials
ASTM D3666	(2013) Standard Specification for Minimum Requirements for Agencies Testing and Inspecting Road and Paving Materials
ASTM D5444	(2008) Mechanical Size Analysis of Extracted Aggregate
ASTM D6925	(2014) Standard Test Method for Preparation and Determination of the Relative Density of Hot Mix Asphalt (HMA) Specimens by Means of the Superpave Gyratory Compactor
ASTM D6926	(2010) Standard Practice for Preparation of Bituminous Specimens Using Marshall Apparatus
ASTM D6927	(2006) Standard Test Method for Marshall Stability and Flow of Bituminous Mixtures

SOUTH DAKOTA DEPARTMENT OF TRANSPORTATION (SDDOT)

1.3 SUBMITTALS

Government approval is required for submittals with a "G" designation; submittals not having a "G" designation are for information only. When used, a designation following the "G" designation identifies the office that will review the submittal for the Government. Submit the following in accordance with Section 01 33 00 SUBMITTAL PROCEDURES:

SD-03 Product Data

Mix Design; G

Quality Control; G

Material Acceptance; G

SD-04 Samples

Asphalt Cement Binder; G

Aggregates; G

SD-06 Test Reports

Aggregates; G

QC Monitoring; G

SD-07 Certificates

Asphalt Cement Binder; G

Testing Laboratory; G

1.4 ENVIRONMENTAL REQUIREMENTS

Do not place the hot-mix asphalt upon a wet surface or when the surface temperature of the underlying course is less than specified in Table 3. The temperature requirements may be waived by the Contracting Officer, if requested; however, meet all other requirements, including compaction.

Table 3. Surface Temperature Limitations of Underlying Course

Mat Thickness, inches	Degrees F
3 or greater	40
Less than 3	45

PART 2 PRODUCTS

2.1 SYSTEM DESCRIPTION

Perform the work consisting of pavement courses composed of mineral aggregate and asphalt material heated and mixed in a central mixing plant and placed on a prepared course. HMA designed and constructed in accordance with this section shall conform to the lines, grades, thicknesses, and typical cross sections indicated. Construct each course to the depth, section, or elevation required by the drawings and roll, finish, and approve it before the placement of the next course.

2.1.1 Asphalt Mixing Plant

Plants used for the preparation of hot-mix asphalt shall conform to the requirements of AASHTO M 156 with the following changes:

2.1.1.1 Truck Scales

Weigh the asphalt mixture on approved, certified scales at the Contractor's expense. Inspect and seal scales at least annually by an approved calibration laboratory.

2.1.1.2 Testing Facilities

Provide laboratory facilities at the plant for the use of the Government's acceptance testing and the Contractor's quality control testing.

2.1.2 Hauling Equipment

Provide trucks for hauling hot-mix asphalt having tight, clean, and smooth metal beds. To prevent the mixture from adhering to them, the truck beds shall be lightly coated with a minimum amount of paraffin oil, lime solution, or other approved material. Petroleum based products shall not be used as a release agent. Each truck shall have a suitable cover to protect the mixture from adverse weather. When necessary to ensure that the mixture will be delivered to the site at the specified temperature, truck beds shall be insulated or heated and covers (tarps) shall be securely fastened.

2.1.3 Asphalt Pavers

Provide asphalt pavers which are self-propelled, with an activated screed, heated as necessary, and capable of spreading and finishing courses of hot-mix asphalt which will meet the specified thickness, smoothness, and grade. The paver shall have sufficient power to propel itself and the hauling equipment without adversely affecting the finished surface.

2.1.3.1 Receiving Hopper

Provide paver with a receiving hopper of sufficient capacity to permit a uniform spreading operation and equipped with a distribution system to place the mixture uniformly in front of the screed without segregation. The screed shall effectively produce a finished surface of the required evenness and texture without tearing, shoving, or gouging the mixture.

2.1.3.2 Automatic Grade Controls

Equip the paver with a control system capable of automatically maintaining the specified screed elevation. The control system shall be automatically actuated from either a reference line and/or through a system of mechanical sensors or sensor-directed mechanisms or devices which will maintain the paver screed at a predetermined transverse slope and at the proper elevation to obtain the required surface. The transverse slope controller shall be capable of maintaining the screed at the desired slope within plus or minus 0.1 percent. A transverse slope controller shall not be used to control grade. Provide controls capable of working in conjunction with any of the following attachments:

a. Ski-type device of not less than 30 feet in length.

b. Taut stringline set to grade.

c. Short ski or shoe for joint matching.

d. Laser control.

2.1.4 Rollers

Rollers shall be in good condition and shall be operated at slow speeds to avoid displacement of the asphalt mixture. The number, type, and weight of rollers shall be sufficient to compact the mixture to the required density while it is still in a workable condition. Do not use equipment which causes excessive crushing of the aggregate.

2.2 AGGREGATES

Provide aggregates consisting of crushed stone, crushed gravel, crushed slag, screenings, natural sand and mineral filler, as required. The portion of material retained on the No. 4 sieve is coarse aggregate. The portion of material passing the No. 4 sieve and retained on the No. 200 sieve is fine aggregate. The portion passing the No. 200 sieve is defined as mineral filler. Submit all aggregate test results and samples to the Contracting Officer at least 14 days prior to start of construction.

2.2.1 Coarse Aggregate

Provide coarse aggregate consisting of sound, tough, durable particles,

free from films of material that would prevent thorough coating and bonding with the asphalt material and free from organic matter and other deleterious substances. All individual coarse aggregate sources shall meet the following requirements:

Coarse aggregate shall comply with 2015 SDDOT Section 880.

2.2.2 Fine Aggregate

Fine aggregate shall consist of clean, sound, tough, durable particles free from coatings of clay, silt, or any objectionable material and containing no clay balls.

Fine aggregate shall comply with 2015 SDDOT Section 880.

2.2.3 Aggregate Gradation

The combined aggergate gradation shall conform to the gradation specifications in the 2015 SDDOT Standard Specifications for Roads and Bridges, Section 880.2, Table 1, Class E Type 1 asphalt

2.3 ASPHALT CEMENT BINDER

Asphalt cement binder shall conform to 2015 SDDOT Standard Specification for Roads and Bridges, section 890.2D.

2.4 MIX DESIGN

a. Develop the mix design. The asphalt mix shall be composed of a mixture of well-graded aggregate, mineral filler if required, and asphalt material. The aggregate fractions shall be sized, handled in separate size groups, and combined in such proportions that the resulting mixture meets the grading requirements of the job mix formula (JMF). Submit proposed JMF; do not produce hot-mix asphalt for payment until a JMF has been approved. The hot-mix asphalt shall be designed in accordance with 2015 SDDOT Standard Specifications for Roads and Bridges, for Class E Type 1 asphalt. Asphalt lifts designated as 1" or less shall be designed in accordance with Class E Type 2 asphalt.

b. At the option of the Contractor, a currently used DOT Superpave hot mix may be used in lieu of developing a Marshall hot mix design as described herein. Design the Superpave volumetric mix in accordance with AI SP-2 and ASTM D6925. The nominal maximum aggregate size (NMAS) shall be 3/4 inch. Other DOT hot mix design methods (Hveem, etc.) may be suitable, as determined by the Contracting Officer.

2.4.1 JMF Requirements

Submit in writing the job mix formula for approval at least 14 days prior to the start of the test section including as a minimum:

a. Percent passing each sieve size.

b. Percent of asphalt cement.

c. Percent of each aggregate and mineral filler to be used.

d. Asphalt viscosity grade, penetration grade, or performance grade.

e. Number of blows of hand-held hammer per side of molded specimen. (NA for Superpave)

f. Number of gyrations of Superpave gyratory compactor, (NA for Marshall mix design)

g. Laboratory mixing temperature.

h. Lab compaction temperature.

i. Temperature-viscosity relationship of the asphalt cement.

j. Plot of the combined gradation on the 0.45 power gradation chart, stating the nominal maximum size.

k. Graphical plots of stability (NA for Superpave), flow (NA for Superpave), air voids, voids in the mineral aggregate, and unit weight versus asphalt content as shown in AI MS-2.

l. Specific gravity and absorption of each aggregate.

m. Percent natural sand.

n. Percent particles with 2 or more fractured faces (in coarse aggregate).

o. Fine aggregate angularity.

p. Percent flat or elongated particles (in coarse aggregate).

q. Tensile Strength Ratio(TSR).

r. Antistrip agent (if required) and amount.

s. List of all modifiers and amount.

t. Correlation of hand-held hammer with mechanical hammer (NA for Superpave).

u. Percentage and properties (asphalt content, binder properties, and aggregate properties) of reclaimed asphalt pavement (RAP) in accordance with paragraph RECYCLED HOT-MIX ASPHALT, if RAP is used.

2.4.2 Adjustments to Field JMF

Keep the Laboratory JMF for each mixture in effect until a new formula is approved in writing by the Contracting Officer. Should a change in sources of any materials be made, perform a new laboratory jmf design and a new JMF approved before the new material is used. The Contractor will be allowed to adjust the Laboratory JMF within the limits specified below to optimize mix volumetric properties with the approval of the Contracting Officer. Adjustments to the Laboratory JMF shall be applied to the field (plant) established JMF and limited to those values as shown. Adjustments shall be targeted to produce or nearly produce 4 percent voids total mix (VTM).

TABLE 6. Field (Plant) Established JMF Tolerances	
Sieves	Adjustments (plus or minus), percent
1/2 inch	3
No. 4	3
No. 8	3
No. 200	1
Binder Content	0.4

If adjustments are needed that exceed these limits, develop a new mix design. Tolerances given above may permit the aggregate grading to be outside the limits shown in Table 4; while not desirable, this is acceptable, except for the No. 200 sieve, which shall remain within the aggregate grading of Table 4.

PART 3 EXECUTION

3.1 PREPARATION OF ASPHALT BINDER MATERIAL

Heat the asphalt cement material avoiding local overheating and providing a continuous supply of the asphalt material to the mixer at a uniform temperature. The temperature of unmodified asphalts shall be no more than 325 degrees F when added to the aggregates.

3.2 PREPARATION OF MINERAL AGGREGATE

Heat and dry the aggregate for the mixture prior to mixing. No damage shall occur to the aggregates due to the maximum temperature and rate of heating used. The temperature of the aggregate and mineral filler shall not exceed 350 degrees F when the asphalt cement is added. The temperature shall not be lower than is required to obtain complete coating and uniform distribution on the aggregate particles and to provide a mixture of satisfactory workability.

3.3 PREPARATION OF HOT-MIX ASPHALT MIXTURE

The aggregates and the asphalt cement shall be weighed or metered and introduced into the mixer in the amount specified by the JMF. Mix the combined materials until the aggregate obtains a uniform coating of asphalt binder and is thoroughly distributed throughout the mixture. Wet mixing time shall be the shortest time that will produce a satisfactory mixture, but no less than 25 seconds for batch plants. Establish the wet mixing time for all plants based on the procedure for determining the percentage of coated particles described in ASTM D2489/D2489M, for each individual plant and for each type of aggregate used. The wet mixing time will be set to at least achieve 95 percent of coated particles. The moisture content of all hot-mix asphalt upon discharge from the plant shall not exceed 0.5 percent by total weight of mixture as measured by ASTM D1461.

3.4 PREPARATION OF THE UNDERLYING SURFACE

Immediately before placing the hot mix asphalt, clean the underlying course of dust and debris. Apply a prime coat and/or tack coat in accordance with 2015 SDDOT Section 320.3G.

3.5 TESTING LABORATORY

Submit certification of compliance and Plant Scale Calibration Certification. Use a laboratory to develop the JMF that meets the requirements of ASTM D3666. A statement signed by the manager of the laboratory stating that it meets these requirements or clearly listing all deficiencies shall be submitted to the Contracting Officer prior to the start of construction. The statement shall contain as a minimum:

a. Qualifications of personnel; laboratory manager, supervising technician, and testing technicians.

b. A listing of equipment to be used in developing the job mix.

c. A copy of the laboratory's quality control system.

d. Evidence of participation in the AASHTO Materials Reference Laboratory (AMRL) program.

3.6 TRANSPORTING AND PLACING

3.6.1 Transporting

Transport the hot-mix asphalt from the mixing plant to the site in clean, tight vehicles. Schedule deliveries so that placing and compacting of mixture is uniform with minimum stopping and starting of the paver. Provide adequate artificial lighting for night placements. Hauling over freshly placed material will not be permitted until the material has been compacted as specified, and allowed to cool to 140 degrees F. To deliver mix to the paver, use a material transfer vehicle operated to produce continuous forward motion of the paver.

3.6.2 Placing

Place and compact the mix at a temperature suitable for obtaining density, surface smoothness, and other specified requirements. Upon arrival, place the mixture to the full width by an asphalt paver; it shall be struck off in a uniform layer of such depth that, when the work is completed, it will have the required thickness and conform to the grade and contour indicated. Regulate the speed of the paver to eliminate pulling and tearing of the asphalt mat. Unless otherwise permitted, placement of the mixture shall begin along the centerline of a crowned section or on the high side of areas with a one-way slope. Place the mixture in consecutive adjacent strips having a minimum width of 10 feet. The longitudinal joint in one course shall offset the longitudinal joint in the course immediately below by at least 1 foot; however, the joint in the surface course shall be at the centerline of the pavement. Transverse joints in one course shall be offset by at least 10 feet from transverse joints in the previous course. Transverse joints in adjacent lanes shall be offset a minimum of 10 feet. On isolated areas where irregularities or unavoidable obstacles make the use of mechanical spreading and finishing equipment impractical, the mixture may be spread and luted by hand tools.

3.7 COMPACTION OF MIXTURE

After placing, the mixture shall be thoroughly and uniformly compacted by rolling. Compact the surface as soon as possible without causing displacement, cracking or shoving. The sequence of rolling operations and the type of rollers used shall be at the discretion of the Contractor. The speed of the roller shall, at all times, be sufficiently slow to avoid displacement of the hot mixture and be effective in compaction. Any displacement occurring as a result of reversing the direction of the roller, or from any other cause, shall be corrected at once. Furnish sufficient rollers to handle the output of the plant. Continue rolling until the surface is of uniform texture, true to grade and cross section, and the required field density is obtained. To prevent adhesion of the mixture to the roller, keep the wheels properly moistened but excessive water will not be permitted. In areas not accessible to the roller, the mixture shall be thoroughly compacted with hand tampers. Any mixture that becomes loose and broken, mixed with dirt, contains check-cracking, or is in any way defective shall be removed full depth, replaced with fresh hot mixture and immediately compacted to conform to the surrounding area. This work shall be done at the Contractor's expense. Skin patching will not be allowed.

3.8 JOINTS

The formation of joints shall be performed ensuring a continuous bond between the courses and to obtain the required density. All joints shall have the same texture as other sections of the course and meet the requirements for smoothness and grade.

3.8.1 Transverse Joints

Do not pass the roller over the unprotected end of the freshly laid mixture, except when necessary to form a transverse joint. When necessary to form a transverse joint, it shall be made by means of placing a bulkhead or by tapering the course. The tapered edge shall be cut back to its full depth and width on a straight line to expose a vertical face prior to placing material at the joint. Remove the cutback material from the project. In both methods, all contact surfaces shall be given a light tack coat of asphalt material before placing any fresh mixture against the joint.

3.8.2 Longitudinal Joints

Longitudinal joints which are irregular, damaged, uncompacted, cold (less than 175 degrees F at the time of placing adjacent lanes), or otherwise defective, shall be cut back a maximum of 3 inches from the top of the course with a cutting wheel to expose a clean, sound vertical surface for the full depth of the course. All cutback material shall be removed from the project. All contact surfaces shall be given a light tack coat of asphalt material prior to placing any fresh mixture against the joint. The Contractor will be allowed to use an alternate method if it can be demonstrated that density, smoothness, and texture can be met.

3.9 QUALITY CONTROL

3.9.1 General Quality Control Requirements

Develop and submit an approved Quality Control Plan. Submit aggregate and QC test results. Do not produce hot-mix asphalt for payment until the

quality control plan has been approved addressing all elements which affect the quality of the pavement including, but not limited to:

a. Mix Design

b. Aggregate Grading

c. Quality of Materials

d. Stockpile Management

e. Proportioning

f. Mixing and Transportation

g. Mixture Volumetrics

h. Moisture Content of Mixtures

i. Placing and Finishing

j. Joints

k. Compaction

l. Surface Smoothness

3.9.2 Quality Control Testing

Perform all quality control tests applicable to these specifications and as set forth in the Quality Control Program. The testing program shall include, but shall not be limited to, tests for the control of asphalt content, aggregate gradation, temperatures, aggregate moisture, moisture in the asphalt mixture, laboratory air voids, stability (NA for Superpave), flow (NA for Superpave), in-place density, grade and smoothness. Develop a Quality Control Testing Plan as part of the Quality Control Program.

3.9.2.1 Asphalt Content

Asphalt Content will be figured at the end of each day, by sticking the asphalt binder tank to determind how much asphalt binder was used.

3.9.2.2 Gradation

Determine aggregate gradations a minimum of twice per lot from mechanical analysis of recovered aggregate in accordance with ASTM D5444. When asphalt content is determined by the ignition oven or nuclear method, aggregate gradation shall be determined from hot bin samples on batch plants, or from the cold feed on drum mix plants. For batch plants, test aggregates in accordance with ASTM C136/C136M using actual batch weights to determine the combined aggregate gradation of the mixture.

3.9.2.3 Aggregate Moisture

Determine the moisture content of aggregate used for production a minimum of once per lot in accordance with ASTM C566.

3.9.2.4 Moisture Content of Mixture

Determine the moisture content of the mixture at least once per lot in accordance with ASTM D1461 or an approved alternate procedure.

3.9.2.5 Laboratory Air Voids, Marshall Stability and Flow

Take mixture samples at least four times per lot compacted into specimens, using 50 blows per side with the hand-held Marshall hammer as described in ASTM D6926. When the Superpave gyratory compactor is used, mixes will be compacted to 50 gyrations in accordance with ASTM D6925. Hot-mix provided under the DOT Superpave option shall be compacted in accordance with the DOT requirements. After compaction, determine the laboratory air voids of each specimen. Stability and flow shall be determined for the Marshall-compacted specimens, in accordance with ASTM D6927.

3.9.2.6 In-Place Density

Conduct any necessary testing to ensure the specified density is achieved. A nuclear gauge may be used to monitor pavement density in accordance with ASTM D2950/D2950M.

3.9.2.7 Grade and Smoothness

Conduct the necessary checks to ensure the grade and smoothness requirements are met in accordance with paragraphs MATERIAL ACCEPTANCE.

3.9.2.8 Additional Testing

Any additional testing, which the Contractor deems necessary to control the process, may be performed at the Contractor's option.

3.9.2.9 QC Monitoring

Submit all QC test results to the Contracting Officer on a daily basis as the tests are performed. The Contracting Officer reserves the right to monitor any of the Contractor's quality control testing and to perform duplicate testing as a check to the Contractor's quality control testing.

3.9.3 Sampling

When directed by the Contracting Officer, sample and test any material which appears inconsistent with similar material being produced, unless such material is voluntarily removed and replaced or deficiencies corrected by the Contractor. All sampling shall be in accordance with standard procedures specified.

3.10 MATERIAL ACCEPTANCE

Testing for acceptability of work will be performed by an independent laboratory hired by the Contractor. Forward test results and payment calculations daily to the Contracting Officer. Acceptance of the plant produced mix and in-place requirements will be on a lot to lot basis. A standard lot for all requirements will be equal to 1000 tons or everyday that asphalt is produced.

3.10.1 Sublot Sampling

One random mixture sample for determining laboratory air voids,

theoretical maximum density, and for any additional testing the Contracting Officer desires, will be taken from a loaded truck delivering mixture to each sublot, or other appropriate location for each sublot. All samples will be selected randomly, using commonly recognized methods of assuring randomness conforming to ASTM D3665 and employing tables of random numbers or computer programs. Laboratory air voids will be determined from three laboratory compacted specimens of each sublot sample in accordance with ASTM D6926. The specimens will be compacted within 2 hours of the time the mixture was loaded into trucks at the asphalt plant. Samples will not be reheated prior to compaction and insulated containers will be used as necessary to maintain the temperature.

3.10.2 Additional Sampling and Testing

The Contracting Officer reserves the right to direct additional samples and tests for any area which appears to deviate from the specification requirements. The cost of any additional testing will be paid for by the Government. Testing in these areas will be in addition to the lot testing, and the requirements for these areas will be the same as those for a lot.

3.10.3 Grade

The final wearing surface of pavement shall conform to the elevations and cross sections shown and shall vary not more than 0.05 foot from the plan grade established and approved at site of work. Finished surfaces at juncture with other pavements shall coincide with finished surfaces of abutting pavements. Deviation from the plan elevation will not be permitted in areas of pavements where closer conformance with planned elevation is required for the proper functioning of drainage and other appurtenant structures involved. The grade will be determined by running lines of levels at intervals of 25 feet, or less, longitudinally and transversely, to determine the elevation of the completed pavement surface. Within 5 working days, after the completion of a particular lot incorporating the final wearing surface, test the final wearing surface of the pavement for conformance with the specified plan grade. Diamond grinding may be used to remove high spots to meet grade requirements. Skin patching for correcting low areas or planing or milling for correcting high areas will not be permitted.

3.10.4 Surface Smoothness

Use one of the following methods to test and evaluate surface smoothness of the pavement. Perform all testing in the presence of the Contracting Officer. Keep detailed notes of the results of the testing and furnish a copy to the Government immediately after each day's testing. Where drawings show required deviations from a plane surface (crowns, drainage inlets, etc.), the surface shall be finished to meet the approval of the Contracting Officer.

3.10.4.1 Smoothness Requirements

3.10.4.1.1 Straightedge Testing

The finished surfaces of the pavements shall have no abrupt change of 1/4 inch or more, and all pavements shall be within the tolerances of 1/4 inch in both the longitudinal and transverse directions, when tested with an approved 12 feet straightedge.

3.10.4.2 Testing Method

After the final rolling, but not later than 24 hours after placement, test the surface of the pavement in each entire lot in such a manner as to reveal all surface irregularities exceeding the tolerances specified above. Separate testing of individual sublots is not required. If any pavement areas are ground, these areas shall be retested immediately after grinding. Test each lot of the pavement in both a longitudinal and a transverse direction on parallel lines. Set the transverse lines 15 feet or less apart, as directed. The longitudinal lines shall be at the centerline of each paving lane for lanes less than 20 feet wide and at the third points for lanes 20 feet or wider. Also test other areas having obvious deviations. Longitudinal testing lines shall be continuous across all joints.

3.10.4.2.1 Straightedge Testing

Hold the straightedge in contact with the surface and move it ahead one-half the length of the straightedge for each successive measurement. Determine the amount of surface irregularity by placing the freestanding (unleveled) straightedge on the pavement surface and allowing it to rest upon the two highest spots covered by its length, and measuring the maximum gap between the straightedge and the pavement surface in the area between these two high points.

-- End of Section --

SECTION TABLE OF CONTENTS

DIVISION 32 - EXTERIOR IMPROVEMENTS

SECTION 32 12 36.13

ASPHALTIC SEAL AND FOG COATS

PART 1 GENERAL

1.1 UNIT PRICES
1.1.1 Measurement
1.1.2 Payment
1.1.3 Waybills and Delivery Tickets
1.2 REFERENCES
1.3 SUBMITTALS
1.4 EQUIPMENT, TOOLS, AND MACHINES
1.4.1 Bituminous Distributors
1.4.2 Aggregate Spreader
1.4.3 Pneumatic-Tired Roller
1.4.4 Power Brooms and Power Blowers
1.4.5 Scales
1.4.6 Storage Tanks
1.4.7 Single-Pass, Surface-Treatment Machines
1.5 QUALITY ASSURANCE
1.5.1 Samples
1.5.2 Aggregates Source
1.5.3 Bituminous Material Source
1.5.4 Equipment Calibration
1.6 DELIVERY, STORAGE, AND HANDLING
1.7 ENVIRONMENTAL REQUIREMENTS

PART 2 PRODUCTS

2.1 BITUMINOUS MATERIAL FOR SEAL COAT
2.2 AGGREGATE FOR SEAL COAT
2.2.1 Coarse Aggregate
2.2.1.1 Film Retention
2.2.1.2 Particle Shapes
2.2.1.3 Weight Loss
2.2.1.4 Friable Particles
2.2.1.5 Crushed Slag
2.2.1.6 Crushed Aggregate
2.2.2 Fine Aggregate
2.3 EMULSIFIED ASPHALT FOR FOG SEAL
2.4 WATER

PART 3 EXECUTION

3.1 PREPARATION OF SURFACE
3.2 SEAL COAT APPLICATION
3.2.1 Rate
3.2.2 Temperature
3.2.3 Application of Bituminous Material

3.2.4 Aggregate Application Rate
3.2.5 Application of Aggregate
3.2.6 Rolling and Brooming
3.3 FIELD QUALITY CONTROL - SEAL COAT
3.3.1 Tests
3.3.1.1 Gradation
3.3.1.2 Abrasion Resistance
3.3.1.3 Stripping
3.3.2 Bituminous Material Sample
3.4 FOG SEAL APPLICATION
3.4.1 Application Inspection
3.4.2 Inspection Reports
3.4.3 Application
3.5 SITE PROTECTION
3.6 TRAFFIC CONTROL

-- End of Section Table of Contents --

SECTION 32 12 36.13

ASPHALTIC SEAL AND FOG COATS

PART 1 GENERAL

1.1 UNIT PRICES

1.1.1 Measurement

The amount paid for asphalt surface treatment, flush seals, and fog seals will be the number of square yards of roadway sealed in the accepted work.

1.1.2 Payment

The quantities of asphalt surface treatment, flush seal, or fog seal, determined as specified above, will be paid for at the respective contract unit prices. Payment will constitute full compensation for all operations necessary to complete the work as specified herein.

1.1.3 Waybills and Delivery Tickets

Do not remove bituminous material from the tank car or storage tank until measurements of the remaining quantity have been taken. Submit waybills and delivery tickets during the progress of the work. Before the final statement is allowed, file certified waybills and delivery tickets for all materials used in the work covered by this section.

1.2 REFERENCES

The publications listed below form a part of this specification to the extent referenced. The publications are referred to within the text by the basic designation only.

ASTM INTERNATIONAL (ASTM)

ASTM C131/C131M	(2014) Standard Test Method for Resistance to Degradation of Small-Size Coarse Aggregate by Abrasion and Impact in the Los Angeles Machine
ASTM C136/C136M	(2014) Standard Test Method for Sieve Analysis of Fine and Coarse Aggregates
ASTM C142/C142M	(2017) Standard Test Method for Clay Lumps and Friable Particles in Aggregates
ASTM C29/C29M	(2017a) Standard Test Method for Bulk Density ("Unit Weight") and Voids in Aggregate
ASTM D140/D140M	(2016) Standard Practice for Sampling Asphalt Materials
ASTM D2995	(1999; R 2009) Determining Application

	Rate of Bituminous Distributors
ASTM D3625/D3625M	(2012) Standard Practice for Effect of Water on Bituminous-Coated Aggregate Using Boiling Water
ASTM D4791	(2010) Flat Particles, Elongated Particles, or Flat and Elongated Particles in Coarse Aggregate
ASTM D75/D75M	(2014) Standard Practice for Sampling Aggregates

U.S. FEDERAL HIGHWAY ADMINISTRATION (FHWA)

MUTCD	(2009) Manual on Uniform Traffic Control Devices

SOUTH DAKOTA DEPARTMENT OF TRANSPORTATION (SDDOT)

1.3 SUBMITTALS

Government approval is required for submittals with a "G" designation; submittals not having a "G" designation are for Contractor Quality Control approval. When used, a designation following the "G" designation identifies the office that will review the submittal. Submit the following in accordance with Section 01 33 00 SUBMITTAL PROCEDURES:

SD-03 Product Data

Waybills and Delivery Tickets; G

Equipment List; G

Inspection Reports; G

SD-04 Samples

Bituminous Materials; G

Aggregates; G

Fog Seal; G

SD-06 Test Reports

Tests

1.4 EQUIPMENT, TOOLS, AND MACHINES

Equipment, plant and tools used in the work are subject to approval. Maintain in a satisfactory working condition at all times. Provide equipment which is adequate and has the capability of producing the results specified. Provide calibrated equipment, such as asphalt distributors, scales, batching equipment, spreaders and similar equipment, that has been calibrated by an approved calibration laboratory within 12 months prior to commencing work and every 12 months thereafter, by such laboratory from the date of recalibration, during the term of the contract. Submit an equipment list with calibration reports.

1.4.1 Bituminous Distributors

Provide distributors that have pneumatic tires of sufficient size and number to prevent rutting, shoving, or otherwise damaging any part of the pavement structure. Use distributors that distribute the bituminous material in a uniform double or triple lap at the specified temperature, at readily determined and controlled rates from 0.05 to 2.0 gallons/square yard, with a pressure range of 25 to 75 psi with an allowable variation from the specified rate of not more than plus or minus 5 percent, and at variable widths. Include in the distributor equipment a separate power unit for the bitumen pump, full-circulation spray bars, tachometer, pressure gauges, volume-measuring devices, adequate heaters for heating of materials to the proper application temperature, a thermometer for reading the temperature of tank contents, and a hand-held hose attachment suitable for applying bituminous material manually to areas inaccessible to the distributor. Equip the distributor to circulate and agitate the bituminous material during the heating process. Provide distributor with a horizontally and vertically adjustable spray nozzle bar. Make normal width of bar application at least 12 feet, with provisions for lesser or larger width when necessary. Equip distributor with a meter having a dial registering feet of travel/min and a meter that registers the application rate in gallons/square yard. Make both dials visible to the distributor driver. Provide a thermometer and well, not in contact with any heating tubes, for accurately indicating temperature of asphalt emulsion.

1.4.2 Aggregate Spreader

Use aggregate-spreading equipment that is adjustable and capable of uniformly spreading aggregate at the specified rate in a single-pass operation over the surface to be sealed.

1.4.3 Pneumatic-Tired Roller

Provide a pneumatic-tired roller of sufficient size to seat the cover aggregate into the bituminous material without fracturing the aggregate particles. Use rollers that have a total compacting width of not less than 5 feet and a tire pressure of at least 50 psi. Use rollers that weigh at least 18,000 pounds.

1.4.4 Power Brooms and Power Blowers

Provide power brooms and power blowers suitable for cleaning surfaces to be treated which the seal coat is to be applied.

1.4.5 Scales

Use scales of sufficient size and capacity to accommodate all trucks hauling aggregates in the job. Use scales that have been tested and approved by an inspector of the state inspection bureau charged with scales inspection within the State in which the project is located. If an official of the inspection bureau is not available, test the scales in accordance with the State specifications in the presence of the Contracting Officer. Keep the necessary number of standard weights on hand at all times for testing the scales.

1.4.6 Storage Tanks

Provide tanks capable of heating the bituminous material, under effective

and positive control at all times, to the required temperature. Accomplish heating by steam coils, hot oil, or electricity. Affix to the tank an armored thermometer with a range from 100 to 300 degrees F so that the temperature of the bituminous material may be read at all times.

1.4.7 Single-Pass, Surface-Treatment Machines

Provide machines capable of spraying bituminous material and spreading aggregate in one pass; of distributing the bituminous material uniformly, at even heat, and in controlled amounts; and immediately spreading aggregates uniformly, in controlled amounts, over the surface to be sealed.

1.5 QUALITY ASSURANCE

Perform sampling and testing using an approved commercial testing laboratory or facilities furnished by the Contractor. No work requiring testing will be permitted until the facilities have been inspected and approved. The first inspection will be at the expense of the Government. Costs incurred for any subsequent inspection will be charged to the Contractor. Perform tests in sufficient numbers, and at the location and times directed, to ensure that the materials meet specified requirements.

1.5.1 Samples

Take aggregate samples for laboratory tests in accordance with ASTM D75/D75M. Take samples of bituminous material in accordance with ASTM D140/D140M.

1.5.2 Aggregates Source

Select sources from which aggregates are to be obtained and notify the Contracting Officer within 15 days after the award of the Contract. Submit a 50 pound sample of each aggregate to be used. Perform tests for the evaluation of aggregates by using an approved commercial laboratory at no expense to the Government. Tests for determining the suitability of aggregate include, but are not limited to: gradation in accordance with ASTM C136/C136M, abrasion resistance in accordance with ASTM C131/C131M, clay lumps and friable particles in accordance with ASTM C142/C142M, unit weight and voids in accordance with ASTM C29/C29M, and flat and elongated particles in accordance with ASTM D4791.

1.5.3 Bituminous Material Source

Select sources from which bituminous materials are to be obtained and notify the Contracting Officer within 15 days after the award of the contract. From each source of supply, submit a one gallon sample of bituminous material.

1.5.4 Equipment Calibration

Furnish all equipment, materials and labor necessary to calibrate the bituminous distributor and the aggregate spreader. Perform all calibrations with the approved job materials and prior to applying the specified coatings to the prepared surface. Perform calibration of the bituminous distributor in accordance with ASTM D2995. Inspect all equipment prior to start of work and at regular intervals as needed during work.

1.6 DELIVERY, STORAGE, AND HANDLING

Deliver asphalt materials to the site in a homogenous and undamaged condition. Inspect the materials for contamination and damage. Unload and store the materials with a minimum of handling. Protect stored aggregate from contamination and segregation. Replace defective or damaged materials.

1.7 ENVIRONMENTAL REQUIREMENTS

Apply the coating when the existing surface is dry, and when the weather is not foggy, rainy, or when the wind velocity will prevent the uniform application of the bitumen or aggregates. Apply the fog seal coat only when the ambient air and pavement surface temperature on the project are both at least 60 degrees F in the shade, unless otherwise directed. Apply the bituminous seal coat when the ambient air and pavement surface temperature on the project are both at least 50 degrees F and rising or unless otherwise directed.

PART 2 PRODUCTS

2.1 BITUMINOUS MATERIAL FOR SEAL COAT

Use bituminous material that conforms to SD DOT specifications for CRS-2P.

2.2 AGGREGATE FOR SEAL COAT

Use aggregate consisting of crushed stone, crushed gravel, crushed slag, sand and screenings. Use aggregate with a moisture content of not greater than 3 percent. Drying may be required, as directed. Use aggregate conforming to the gradation shown in TABLE I.

TABLE I. AGGREGATE GRADATIONS
(Percent by Weight Passing Square-Mesh Sieves)

Sieve Size	SD DOT Cover Aggergate Type 2A
1/2 inch	
3/8 in	100
No. 4	0-70
No. 8	0-28
No. 40	0-4
No. 200	0.0-3.0

2.2.1 Coarse Aggregate

Use coarse aggregate consisting of clean, sound, durable particles meeting the following requirements.

2.2.1.1 Film Retention

Use aggregate that exhibits not less than 95 percent retention of bituminous film(ASTM D3625/D3625M.

2.2.1.2 Particle Shapes

Use aggregate that has no more than 20 percent by weight of flat and elongated particles on any sieve when determined in accordance with ASTM D4791. A flat particle is one having a ratio of width to thickness greater than 3; an elongated particle is one having a ratio of length to width greater than 3.

2.2.1.3 Weight Loss

Use aggregate with a percent weight loss not exceeding 40 after 500 revolutions, as determined in accordance with ASTM C131/C131M.

2.2.1.4 Friable Particles

Use aggregate with no more than 0.1 percent of the total weight of aggregate sample consisting of friable particles when tested in accordance with ASTM C142/C142M.

2.2.1.5 Crushed Slag

Use crushed slag aggregate with a dry weight not less than 75 pcf, as determined in accordance with ASTM C29/C29M.

2.2.1.6 Crushed Aggregate

Crushed aggregate retained on the No. 4 sieve and each coarser sieve must contain at least 75 percent by weight of crushed pieces having one or more fractured faces with the area of each face equal to at least 75 percent of the smaller midsectional area of the aggregate particle. When two fractures are contiguous, the angle between the planes of fractures must be at least 30 degrees to count as two fractured faces.

2.2.2 Fine Aggregate

Use fine aggregate consisting of clean, sound, durable particles of crushed stone, slag, or crushed gravel. Use aggregate that meet the requirements for stripping, abrasion resistance and percent friable particles as specified for coarse aggregate.

2.3 EMULSIFIED ASPHALT FOR FOG SEAL

Use emulsified asphalt for Fog Seal that conforming to SD DOT Specifications for CSS-1h.

2.4 WATER

Provide fresh, clean, and potable water.

PART 3 EXECUTION

3.1 PREPARATION OF SURFACE

Repair damaged surface and fill cracks before starting work. Immediately

before starting work, remove all loose material, dirt, clay, or other objectionable material from the surface to be treated with power brooms or power blowers, if needed. Paint firmly bonded to the surface may remain. Do not mix material removed from the surface with the cover aggregate. When necessary to achieve a clean surface for fog application, flushing with water will be permitted.

3.2 SEAL COAT APPLICATION

3.2.1 Rate

Spread the bituminous material in the quantities shown in TABLE III. The exact quantities within the range specified, which may be varied to suit field conditions, will be determined by the Contractor and approved by the Contracting Officer prior to use. The bituminous quantities may have to be increased when the pavement has rough surface texture and may have to be decreased when the pavement surface is very tight.

TABLE III. APPLICATION RATE OF MATERIALS
(Quantities Per Square Yards)

Bitunomous Application	Bitumen, gallons	Aggregate, pounds
Asphalt Surface Treatment	0.35-0.40	22-27
Flush Seal	0.05 +/-0.02	5-10
Fog Seal	0.05 +/-0.02	---

3.2.2 Temperature

Apply asphalt at a temperature that will provide an application viscosity between 10 and 60 seconds, Saybolt Furol, or between 20 and 120 centistokes, kinematic. Furnish the temperature/viscosity relationship to the Contracting Officer.

3.2.3 Application of Bituminous Material

Following the preparation and inspection of the pavement surface, apply the seal coat material at the specified application rates as per 2015 SDDOT Standard Specifications for Roads and Bridges, Section 360.3

3.2.4 Aggregate Application Rate

Spread the aggregate in the quantities shown in TABLE III. The exact quantities within the range specified, which may be varied to suit field conditions, will be determined by the Contractor, and approved by the Contracting Officer prior to use. The aggregate weights shown in this table are those of aggregate having a specific gravity of 2.65. If the specific gravity of the aggregate to be used is less than 2.55 or greater than 2.75, make adjustments in the number of pounds of aggregate required per square yard to insure a constant volume of aggregate per square yard of treatment.

3.2.5 Application of Aggregate

Spread the specified quantity of cover aggregate uniformly over the

bituminous material as per the 2015 SDDOT Standard Specifications for Roads and Bridges, Section 360.3

3.2.6 Rolling and Brooming

Begin rolling operations immediately following the application of cover aggregate as per 2015 SDDOT Standard Specifications for Roads and Bridges, Section 360.3

3.3 FIELD QUALITY CONTROL - SEAL COAT

3.3.1 Tests

Perform field tests in sufficient numbers to assure that the specifications are being met. Submit copies of the test results, within 24 hours of the completion of the test. Submit certified copies of the aggregate test results, not less than 30 days before the material is required in the work and certified copies of the bituminous materials test reports indicating compliance with applicable specified requirements, not less than 30 days before the material is required in the work. Provide a copy of the calibration test results before the bituminous distributor and aggregate spreader are used on the job. Testing is the responsibility of the Contractor. Perform test using an approved commercial laboratory. The following number of tests, if performed at the appropriate time, will be the minimum acceptable for each type of operation.

3.3.1.1 Gradation

Perform gradation tests in accordance with ASTM C136/C136M. Perform a minimum of one gradations for each day's run. Repeat the gradation test when the source of materials is changed. When deficiencies are found, retest the material already placed to determine the extent of the unacceptable material. Replace all in-place unacceptable material at no additional expense to the Government.

3.3.1.2 Abrasion Resistance

Perform abrasion resistance tests in accordance with ASTM C131/C131M. Perform one test prior to start of work. If sources of aggregate are changed, conduct an abrasion resistance test prior to using another source.

3.3.1.3 Stripping

Perform stripping test on aggregate from each source, in accordance with ASTM D3625/D3625M, prior to incorporation into the work and when the source is changed.

3.3.2 Bituminous Material Sample

Obtain a sample of the bituminous material used under the supervision of the Contracting Officer. The sample will be retained by the Government.

3.4 FOG SEAL APPLICATION

3.4.1 Application Inspection

Inspect application of fog seal for uniformity. During application, take one sample for each 500 square yards of surface area to receive emulsified asphalt. Weigh samples to determine conformance with application rate.

3.4.2 Inspection Reports

Furnish a written report citing climatic temperature during application of fog seal, emulsion temperature during application, rate of emulsion application, and any significant observations.

3.4.3 Application

Following preparation of the surface, apply the water diluted asphalt emulsion at the rate determined from the trial application. Maintain application temperature of emulsified asphalt between 75 and 160 degrees F. To obtain uniform application of the fog seal at the junction of previous and subsequent applications, spread building paper on the surface of the applied material for a sufficient distance back from the ends of each application so that flow from the spray bar may be started and stopped on the paper, and so that all sprayers will operate at full force. Immediately after application, remove and properly dispose of the building paper. Treat spots unavoidably missed with the hand spray equipment. Base bids on application of diluted emulsion at 0.14 gsy. If the actual amount required is more or less than 0.14 gsy, an adjustment in the contract price will be made as provided by the contract.

3.5 SITE PROTECTION

During applications, protect adjacent buildings, structures, vehicles, manhole covers, inlet grates, and trees to prevent being spattered or marred.

3.6 TRAFFIC CONTROL

Protect freshly placed coatings from damage by traffic. Provide sufficient warning signs and barricades to prevent traffic over freshly treated surfaces. Protect treated areas from traffic for at least 24 hours after final application of coatings, or for such time as necessary to prevent picking up. Provide warning signs and barricades for proper traffic control, in accordance with MUTCD.

-- End of Section --

This page was intentionally left blank for duplex printing.

SECTION TABLE OF CONTENTS

DIVISION 32 - EXTERIOR IMPROVEMENTS

SECTION 32 16 13

CONCRETE SIDEWALKS AND CURBS AND GUTTERS

PART 1 GENERAL

1.1 MEASUREMENT FOR PAYMENT
1.1.1 Sidewalks
1.1.2 Curbs and Gutters
1.2 BASIS FOR PAYMENT
1.2.1 Sidewalks
1.2.2 Curbs and Gutters
1.3 REFERENCES
1.4 SYSTEM DESCRIPTION
1.4.1 General Requirements
1.4.2 Slip Form Equipment
1.5 SUBMITTALS
1.6 ENVIRONMENTAL REQUIREMENTS
1.6.1 Placing During Cold Weather
1.6.2 Placing During Warm Weather

PART 2 PRODUCTS

2.1 CONCRETE
2.1.1 Air Content
2.1.2 Slump
2.1.3 Reinforcement Steel
2.2 CONCRETE CURING MATERIALS
2.2.1 Impervious Sheet Materials
2.2.2 Burlap
2.2.3 White Pigmented Membrane-Forming Curing Compound
2.3 CONCRETE PROTECTION MATERIALS
2.4 JOINT FILLER STRIPS
2.4.1 Contraction Joint Filler for Curb and Gutter
2.4.2 Expansion Joint Filler, Premolded
2.5 JOINT SEALANTS
2.6 FORM WORK
2.6.1 Sidewalk Forms
2.6.2 Curb and Gutter Forms

PART 3 EXECUTION

3.1 SUBGRADE PREPARATION
3.1.1 Sidewalk Subgrade
3.1.2 Curb and Gutter Subgrade
3.1.3 Maintenance of Subgrade
3.2 FORM SETTING
3.2.1 Sidewalks
3.2.2 Curbs and Gutters
3.3 SIDEWALK CONCRETE PLACEMENT AND FINISHING

3.3.1 Formed Sidewalks
3.3.2 Concrete Finishing
3.3.3 Edge and Joint Finishing
3.3.4 Surface and Thickness Tolerances
3.4 CURB AND GUTTER CONCRETE PLACEMENT AND FINISHING
3.4.1 Formed Curb and Gutter
3.4.2 Curb and Gutter Finishing
3.4.3 Concrete Finishing
3.4.4 Joint Finishing
3.4.5 Surface and Thickness Tolerances
3.5 SIDEWALK JOINTS
3.5.1 Sidewalk Contraction Joints
3.5.2 Sidewalk Expansion Joints
3.5.3 Reinforcement Steel Placement
3.6 CURB AND GUTTER JOINTS
3.6.1 Contraction Joints
3.6.2 Expansion Joints
3.7 CURING AND PROTECTION
3.7.1 General Requirements
3.7.1.1 Membrane Curing Method
3.7.2 Backfilling
3.7.3 Protection
3.8 FIELD QUALITY CONTROL
3.8.1 General Requirements
3.8.2 Concrete Testing
3.8.2.1 Strength Testing
3.8.2.2 Air Content
3.8.2.3 Slump Test
3.8.2.4 Temperature
3.8.3 Thickness Evaluation
3.8.4 Surface Evaluation
3.9 SURFACE DEFICIENCIES AND CORRECTIONS
3.9.1 Thickness Deficiency
3.9.2 High Areas
3.9.3 Appearance

-- End of Section Table of Contents --

SECTION 32 16 13

CONCRETE SIDEWALKS AND CURBS AND GUTTERS

PART 1 GENERAL

1.1 MEASUREMENT FOR PAYMENT

1.1.1 Sidewalks

The quantities of sidewalks to be paid for will be the number of square feet of each depth of sidewalk constructed as indicated. Reinforcing steel is to be bid separately and to include time spent tying in place. Drawing for reinforcement to be provided at time of task order.

1.1.2 Curbs and Gutters

The quantities of curbs and gutters to be paid for will be the number of linear feet of each cross section constructed as indicated, measured along the face of the curb at the gutter line.

1.2 BASIS FOR PAYMENT

1.2.1 Sidewalks

Payment of the quantities of sidewalks measured as specified will be at the contract unit price per square feet of the thickness specified, and is to include all excavation, aggregate base course, and preparation work.

1.2.2 Curbs and Gutters

Payment of the quantities of curbs and gutters measured as specified will be at the contract unit price per linear foot of each cross section, and is to include all excavation, aggregate base course and preparation work.

1.3 REFERENCES

The publications listed below form a part of this specification to the extent referenced. The publications are referred to within the text by the basic designation only.

AMERICAN ASSOCIATION OF STATE HIGHWAY AND TRANSPORTATION OFFICIALS (AASHTO)

AASHTO M 182	(2005; R 2012) Standard Specification for Burlap Cloth Made from Jute or Kenaf and Cotton Mats

ASTM INTERNATIONAL (ASTM)

ASTM A1064/A1064M	(2014) Standard Specification for Carbon-Steel Wire and Welded Wire Reinforcement, Plain and Deformed, for Concrete

ASTM A615/A615M	(2015) Standard Specification for Deformed and Plain Carbon-Steel Bars for Concrete Reinforcement
ASTM C143/C143M	(2012) Standard Test Method for Slump of Hydraulic-Cement Concrete
ASTM C171	(2007) Standard Specification for Sheet Materials for Curing Concrete
ASTM C172/C172M	(2014a) Standard Practice for Sampling Freshly Mixed Concrete
ASTM C173/C173M	(2014) Standard Test Method for Air Content of Freshly Mixed Concrete by the Volumetric Method
ASTM C231/C231M	(2014) Standard Test Method for Air Content of Freshly Mixed Concrete by the Pressure Method
ASTM C309	(2011) Standard Specification for Liquid Membrane-Forming Compounds for Curing Concrete
ASTM C31/C31M	(2012) Standard Practice for Making and Curing Concrete Test Specimens in the Field
ASTM C920	(2014a) Standard Specification for Elastomeric Joint Sealants
ASTM D1751	(2004; E 2013; R 2013) Standard Specification for Preformed Expansion Joint Filler for Concrete Paving and Structural Construction (Nonextruding and Resilient Bituminous Types)
ASTM D1752	(2004a; R 2013) Standard Specification for Preformed Sponge Rubber Cork and Recycled PVC Expansion
ASTM D5893/D5893M	(2010) Cold Applied, Single Component, Chemically Curing Silicone Joint Sealant for Portland Cement Concrete Pavements

1.4 SYSTEM DESCRIPTION

1.4.1 General Requirements

Provide plant, equipment, machines, and tools used in the work subject to approval and maintained in a satisfactory working condition at all times. The equipment shall have the capability of producing the required product, meeting grade controls, thickness control and smoothness requirements as specified. Use of the equipment shall be discontinued if it produces unsatisfactory results. The Contracting Officer shall have access at all times to the plant and equipment to ensure proper operation and compliance with specifications.

1.4.2 Slip Form Equipment

Slip form paver or curb forming machine, will be approved based on trial use on the job and shall be self-propelled, automatically controlled, crawler mounted, and capable of spreading, consolidating, and shaping the plastic concrete to the desired cross section in 1 pass.

1.5 SUBMITTALS

Government approval is required for submittals with a "G" designation; submittals not having a "G" designation are for information only. When used, a designation following the "G" designation identifies the office that will review the submittal for the Government. Submit the following in accordance with Section 01 33 00 SUBMITTAL PROCEDURES:

SD-03 Product Data

Concrete Mix Design; G

Concrete Admixtures; G

SD-06 Test Reports

Field Quality Control; G

Cylinder Compressive Strength; G

1.6 ENVIRONMENTAL REQUIREMENTS

1.6.1 Placing During Cold Weather

Do not place concrete when the air temperature reaches 40 degrees F and is falling, or is already below that point. Placement may begin when the air temperature reaches 35 degrees F and is rising, or is already above 40 degrees F. Make provisions to protect the concrete from freezing during the specified curing period. If necessary to place concrete when the temperature of the air, aggregates, or water is below 35 degrees F, placement and protection shall be approved in writing. Approval will be contingent upon full conformance with the following provisions. The underlying material shall be prepared and protected so that it is entirely free of frost when the concrete is deposited. Mixing water shall be heated as necessary to result in the temperature of the in-place concrete being between 50 and 85 degrees F. Methods and equipment for heating shall be approved. The aggregates shall be free of ice, snow, and frozen lumps before entering the mixer. Covering and other means shall be provided for maintaining the concrete at a temperature of at least 50 degrees F for not less than 72 hours after placing, and at a temperature above freezing for the remainder of the curing period.

1.6.2 Placing During Warm Weather

The temperature of the concrete as placed shall not exceed 85 degrees F except where an approved retarder is used. The mixing water and/or aggregates shall be cooled, if necessary, to maintain a satisfactory placing temperature. The placing temperature shall not exceed 95 degrees F at any time.

PART 2 PRODUCTS

2.1 CONCRETE

Provide concrete conforming to the applicable requirements of this specification except as otherwise specified. Concrete shall have a minimum compressive strength of 4000 psi at 28 days. Maximum size of aggregate shall be 1-1/2 inches. Submit copies of certified delivery tickets for all concrete used in the construction.

2.1.1 Air Content

Mixtures shall have air content by volume of concrete of 5 to 7 percent, based on measurements made immediately after discharge from the mixer.

2.1.2 Slump

The concrete slump shall be 3 inches plus or minus 1 inch where determined in accordance with ASTM C143/C143M.

2.1.3 Reinforcement Steel

Reinforcement bars shall conform to ASTM A615/A615M. Wire mesh reinforcement shall conform to ASTM A1064/A1064M.

2.2 CONCRETE CURING MATERIALS

2.2.1 Impervious Sheet Materials

Impervious sheet materials shall conform to ASTM C171, type optional, except that polyethylene film, if used, shall be white opaque.

2.2.2 Burlap

Burlap shall conform to AASHTO M 182.

2.2.3 White Pigmented Membrane-Forming Curing Compound

White pigmented membrane-forming curing compound shall conform to ASTM C309, Type 2.

2.3 CONCRETE PROTECTION MATERIALS

Concrete protection materials shall be a linseed oil mixture of equal parts, by volume, of linseed oil and either mineral spirits, naphtha, or turpentine. At the option of the Contractor, commercially prepared linseed oil mixtures, formulated specifically for application to concrete to provide protection against the action of deicing chemicals may be used, except that emulsified mixtures are not acceptable.

2.4 JOINT FILLER STRIPS

2.4.1 Contraction Joint Filler for Curb and Gutter

Contraction joint filler for curb and gutter shall consist of hard-pressed fiberboard.

2.4.2 Expansion Joint Filler, Premolded

Expansion joint filler, premolded, shall conform to ASTM D1751 or ASTM D1752, 1/2 inch thick, unless otherwise indicated.

2.5 JOINT SEALANTS

Joint sealant, cold-applied shall conform to ASTM C920 or ASTM D5893/D5893M.

2.6 FORM WORK

Design and construct form work to ensure that the finished concrete will conform accurately to the indicated dimensions, lines, and elevations, and within the tolerances specified. Forms shall be of wood or steel, straight, of sufficient strength to resist springing during depositing and consolidating concrete. Wood forms shall be surfaced plank, 2 inches nominal thickness, straight and free from warp, twist, loose knots, splits or other defects. Wood forms shall have a nominal length of 10 feet. Radius bends may be formed with 3/4 inch boards, laminated to the required thickness. Steel forms shall be channel-formed sections with a flat top surface and with welded braces at each end and at not less than two intermediate points. Ends of steel forms shall be interlocking and self-aligning. Steel forms shall include flexible forms for radius forming, corner forms, form spreaders, and fillers. Steel forms shall have a nominal length of 10 feet with a minimum of 3 welded stake pockets per form. Stake pins shall be solid steel rods with chamfered heads and pointed tips designed for use with steel forms.

2.6.1 Sidewalk Forms

Sidewalk forms shall be of a height equal to the full depth of the finished sidewalk.

2.6.2 Curb and Gutter Forms

Curb and gutter outside forms shall have a height equal to the full depth of the curb or gutter. The inside form of curb shall have batter as indicated and shall be securely fastened to and supported by the outside form. Rigid forms shall be provided for curb returns, except that benders or thin plank forms may be used for curb or curb returns with a radius of 10 feet or more, where grade changes occur in the return, or where the central angle is such that a rigid form with a central angle of 90 degrees cannot be used. Back forms for curb returns may be made of 1-1/2 inch benders, for the full height of the curb, cleated together. In lieu of inside forms for curbs, a curb "mule" may be used for forming and finishing this surface, provided the results are approved.

PART 3 EXECUTION

3.1 SUBGRADE PREPARATION

The subgrade shall be constructed to the specified grade and cross section prior to concrete placement. Subgrade shall be placed and compacted to 95% of maximum optimum density or as directed.

3.1.1 Sidewalk Subgrade

The subgrade shall be tested for grade and cross section with a template extending the full width of the sidewalk and supported between side forms.

3.1.2 Curb and Gutter Subgrade

The subgrade shall be tested for grade and cross section by means of a template extending the full width of the curb and gutter. The subgrade shall be of materials equal in bearing quality to the subgrade under the adjacent pavement.

3.1.3 Maintenance of Subgrade

The subgrade shall be maintained in a smooth, compacted condition in conformity with the required section and established grade until the concrete is placed. The subgrade shall be in a moist condition when concrete is placed. The subgrade shall be prepared and protected to produce a subgrade free from frost when the concrete is deposited.

3.2 FORM SETTING

Set forms to the indicated alignment, grade and dimensions. Hold forms rigidly in place by a minimum of 3 stakes per form placed at intervals not to exceed 4 feet. Corners, deep sections, and radius bends shall have additional stakes and braces, as required. Clamps, spreaders, and braces shall be used where required to ensure rigidity in the forms. Forms shall be removed without injuring the concrete. Bars or heavy tools shall not be used against the concrete in removing the forms. Any concrete found defective after form removal shall be promptly and satisfactorily repaired. Forms shall be cleaned and coated with form oil each time before concrete is placed. Wood forms may, instead, be thoroughly wetted with water before concrete is placed, except that with probable freezing temperatures, oiling is mandatory.

3.2.1 Sidewalks

Set forms for sidewalks with the upper edge true to line and grade with an allowable tolerance of 1/8 inch in any 10 foot long section. After forms are set, grade and alignment shall be checked with a 10 foot straightedge. Forms shall have a transverse slope of 1/4 inch per foot unless otherwise indicated with the low side adjacent to the roadway. Side forms shall not be removed for 12 hours after finishing has been completed.

3.2.2 Curbs and Gutters

The forms of the front of the curb shall be removed not less than 2 hours nor more than 6 hours after the concrete has been placed. Forms back of curb shall remain in place until the face and top of the curb have been finished, as specified for concrete finishing. Gutter forms shall not be removed while the concrete is sufficiently plastic to slump in any direction.

3.3 SIDEWALK CONCRETE PLACEMENT AND FINISHING

3.3.1 Formed Sidewalks

Place concrete in the forms in one layer. When consolidated and finished, the sidewalks shall be of the thickness indicated. After concrete has been placed in the forms, a strike-off guided by side forms shall be used to bring the surface to proper section to be compacted. The concrete shall be consolidated by tamping and spading or with an approved vibrator,

and the surface shall be finished to grade with a strike off.

3.3.2 Concrete Finishing

After straightedging, when most of the water sheen has disappeared, and just before the concrete hardens, finish the surface with a wood or magnesium float or darby to a smooth and uniformly fine granular or sandy texture free of waves, irregularities, or tool marks. A scored surface shall be produced by brooming with a fiber-bristle brush in a direction transverse to that of the traffic, followed by edging.

3.3.3 Edge and Joint Finishing

All slab edges, including those at formed joints, shall be finished with an edger having a radius of 1/8 inch. Transverse joint shall be edged before brooming, and the brooming shall eliminate the flat surface left by the surface face of the edger. Corners and edges which have crumbled and areas which lack sufficient mortar for proper finishing shall be cleaned and filled solidly with a properly proportioned mortar mixture and then finished.

3.3.4 Surface and Thickness Tolerances

Finished surfaces shall not vary more than 5/16 inch from the testing edge of a 10-foot straightedge. Permissible deficiency in section thickness will be up to 1/4 inch.

3.4 CURB AND GUTTER CONCRETE PLACEMENT AND FINISHING

3.4.1 Formed Curb and Gutter

Concrete shall be placed to the section required in a single lift. Consolidation shall be achieved by using approved mechanical vibrators. Curve shaped gutters shall be finished with a standard curb "mule".

3.4.2 Curb and Gutter Finishing

Approved slipformed curb and gutter machines may be used in lieu of hand placement.

3.4.3 Concrete Finishing

Exposed surfaces shall be floated and finished with a smooth wood float until true to grade and section and uniform in texture. Floated surfaces shall then be brushed with a fine-hair brush with longitudinal strokes. The edges of the gutter and top of the curb shall be rounded with an edging tool to a radius of 1/2 inch. Immediately after removing the front curb form, the face of the curb shall be rubbed with a wood or concrete rubbing block and water until blemishes, form marks, and tool marks have been removed. The front curb surface, while still wet, shall be brushed in the same manner as the gutter and curb top. The top surface of gutter and entrance shall be finished to grade with a wood float.

3.4.4 Joint Finishing

Curb edges at formed joints shall be finished as indicated.

3.4.5 Surface and Thickness Tolerances

Finished surfaces shall not vary more than 1/4 inch from the testing edge of a 10-foot straightedge. Permissible deficiency in section thickness will be up to 1/4 inch.

3.5 SIDEWALK JOINTS

Sidewalk joints shall be constructed to divide the surface into rectangular areas. Transverse contraction joints shall be spaced at a distance equal to the sidewalk width or 5 feet on centers, whichever is less, and shall be continuous across the slab. Longitudinal contraction joints shall be constructed along the centerline of all sidewalks 10 feet or more in width. Transverse expansion joints shall be installed at sidewalk returns and opposite expansion joints in adjoining curbs. Where the sidewalk is not in contact with the curb, transverse expansion joints shall be installed as indicated. Expansion joints shall be formed about structures and features which project through or into the sidewalk pavement, using joint filler of the type, thickness, and width indicated. Expansion joints are not required between sidewalks and curb that abut the sidewalk longitudinally.

3.5.1 Sidewalk Contraction Joints

The contraction joints shall be formed in the fresh concrete by cutting a groove in the top portion of the slab to a depth of at least one-fourth of the sidewalk slab thickness, using a jointer to cut the groove, or by sawing a groove in the hardened concrete with a power-driven saw, unless otherwise approved. Sawed joints shall be constructed by sawing a groove in the concrete with a 1/8 inch blade to the depth indicated. An ample supply of saw blades shall be available on the job before concrete placement is started, and at least one standby sawing unit in good working order shall be available at the jobsite at all times during the sawing operations.

3.5.2 Sidewalk Expansion Joints

Expansion joints shall be formed with 1/2 inch joint filler strips. Joint filler in expansion joints surrounding structures and features within the sidewalk may consist of preformed filler material conforming to ASTM D1752 or building paper. Joint filler shall be held in place with steel pins or other devices to prevent warping of the filler during floating and finishing. Immediately after finishing operations are completed, joint edges shall be rounded with an edging tool having a radius of 1/8 inch, and concrete over the joint filler shall be removed. At the end of the curing period, expansion joints shall be cleaned and filled with cold-applied joint sealant. Joint sealant shall be gray or stone in color. The joint opening shall be thoroughly cleaned before the sealing material is placed. Sealing material shall not be spilled on exposed surfaces of the concrete. Concrete at the joint shall be surface dry and atmospheric and concrete temperatures shall be above 50 degrees F at the time of application of joint sealing material. Excess material on exposed surfaces of the concrete shall be removed immediately and concrete surfaces cleaned.

3.5.3 Reinforcement Steel Placement

Reinforcement steel shall be accurately and securely fastened in place with suitable supports and ties before the concrete is placed as shown in

the drawings.

3.6 CURB AND GUTTER JOINTS

Curb and gutter joints shall be constructed at right angles to the line of curb and gutter.

3.6.1 Contraction Joints

Contraction joints shall be constructed directly opposite contraction joints in abutting portland cement concrete pavements and spaced so that monolithic sections between curb returns will not be less than 5 feet nor greater than 15 feet in length.

a. Contraction joints (except for slip forming) shall be constructed by means of 1/8 inch thick separators and of a section conforming to the cross section of the curb and gutter. Separators shall be removed as soon as practicable after concrete has set sufficiently to preserve the width and shape of the joint and prior to finishing.

3.6.2 Expansion Joints

Expansion joints shall be formed by means of preformed expansion joint filler material cut and shaped to the cross section of curb and gutter. Expansion joints shall be provided in curb and gutter directly opposite expansion joints of abutting portland cement concrete pavement, and shall be of the same type and thickness as joints in the pavement. Where curb and gutter do not abut portland cement concrete pavement, expansion joints at least 1/2 inch in width shall be provided at intervals not less than 30 feet nor greater than 120 feet. Expansion joints shall be provided in nonreinforced concrete gutter at locations indicated. Expansion joints shall be sealed immediately following curing of the concrete or as soon thereafter as weather conditions permit. Expansion joints and the top 1 inch depth of curb and gutter contraction-joints shall be sealed with joint sealant. The joint opening shall be thoroughly cleaned before the sealing material is placed. Sealing material shall not be spilled on exposed surfaces of the concrete. Concrete at the joint shall be surface dry and atmospheric and concrete temperatures shall be above 50 degrees F at the time of application of joint sealing material. Excess material on exposed surfaces of the concrete shall be removed immediately and concrete surfaces cleaned.

3.7 CURING AND PROTECTION

3.7.1 General Requirements

Protect concrete against loss of moisture and rapid temperature changes for at least 7 days from the beginning of the curing operation. Protect unhardened concrete from rain and flowing water. All equipment needed for adequate curing and protection of the concrete shall be on hand and ready for use before actual concrete placement begins. Protection shall be provided as necessary to prevent cracking of the pavement due to temperature changes during the curing period.

3.7.1.1 Membrane Curing Method

A uniform coating of white-pigmented membrane-curing compound shall be

applied to the entire exposed surface of the concrete as soon after finishing as the free water has disappeared from the finished surface. Formed surfaces shall be coated immediately after the forms are removed and in no case longer than 1 hour after the removal of forms. Concrete shall not be allowed to dry before the application of the membrane. If any drying has occurred, the surface of the concrete shall be moistened with a fine spray of water and the curing compound applied as soon as the free water disappears. Curing compound shall be applied in two coats by hand-operated pressure sprayers at a coverage of approximately 200 square feet/gallon for the total of both coats. The second coat shall be applied in a direction approximately at right angles to the direction of application of the first coat. The compound shall form a uniform, continuous, coherent film that will not check, crack, or peel and shall be free from pinholes or other imperfections. If pinholes, abrasion, or other discontinuities exist, an additional coat shall be applied to the affected areas within 30 minutes. Concrete surfaces that are subjected to heavy rainfall within 3 hours after the curing compound has been applied shall be resprayed by the method and at the coverage specified above. Areas where the curing compound is damaged by subsequent construction operations within the curing period shall be resprayed. Necessary precautions shall be taken to insure that the concrete is properly cured at sawed joints, and that no curing compound enters the joints. The top of the joint opening and the joint groove at exposed edges shall be tightly sealed before the concrete in the region of the joint is resprayed with curing compound. The method used for sealing the joint groove shall prevent loss of moisture from the joint during the entire specified curing period. Approved standby facilities for curing concrete pavement shall be provided at a location accessible to the jobsite for use in the event of mechanical failure of the spraying equipment or other conditions that might prevent correct application of the membrane-curing compound at the proper time. Concrete surfaces to which membrane-curing compounds have been applied shall be adequately protected during the entire curing period from pedestrian and vehicular traffic, except as required for joint-sawing operations and surface tests, and from any other possible damage to the continuity of the membrane.

3.7.2 Backfilling

After curing, debris shall be removed and the area adjoining the concrete shall be backfilled, graded, and compacted to conform to the surrounding area in accordance with lines and grades indicated.

3.7.3 Protection

Completed concrete shall be protected from damage until accepted. Repair damaged concrete and clean concrete discolored during construction. Concrete that is damaged shall be removed and reconstructed for the entire length between regularly scheduled joints. Refinishing the damaged portion will not be acceptable. Removed damaged portions shall be disposed of as directed.

3.8 FIELD QUALITY CONTROL

Submit copies of all test reports within 24 hours of completion of the test.

3.8.1 General Requirements

Perform the inspection and tests described and meet the specified

requirements for inspection details and frequency of testing. Based upon the results of these inspections and tests, take the action and submit reports as required below, and any additional tests to insure that the requirements of these specifications are met.

3.8.2 Concrete Testing

3.8.2.1 Strength Testing

Provide molded concrete specimens for strength tests. Samples of concrete placed each day shall be taken not less than once a day nor less than once for every 250 cubic yards of concrete. The samples for strength tests shall be taken in accordance with ASTM C172/C172M. Cylinders for acceptance shall be molded in conformance with ASTM C31/C31M by an approved testing laboratory. Each strength test result shall be the average of 2 test cylinders from the same concrete sample tested at 28 days, unless otherwise specified or approved. Concrete specified on the basis of compressive strength will be considered satisfactory if the averages of all sets of three consecutive strength test results equal or exceed the specified strength, and no individual strength test result falls below the specified strength by more than 500 psi.

3.8.2.2 Air Content

Determine air content in accordance with ASTM C173/C173M or ASTM C231/C231M. ASTM C231/C231M shall be used with concretes and mortars made with relatively dense natural aggregates. One test for air content shall be made on randomly selected batches of each class of concrete placed during each shift. Additional tests shall be made when excessive variation in concrete workability is reported by the placing foreman or the Government inspector. If results are out of tolerance, the placing foreman shall be notified and he shall take appropriate action to have the air content corrected at the plant. Additional tests for air content will be performed on each truckload of material until such time as the air content is within the tolerance specified.

3.8.2.3 Slump Test

One slump test shall be made on randomly selected batches of each class of concrete for every 250 cubic yards, or fraction thereof, of concrete placed during each shift. Additional tests shall be performed when excessive variation in the workability of the concrete is noted or when excessive crumbling or slumping is noted along the edges of slip-formed concrete.

3.8.2.4 Temperature

Concrete temperature at time of placement shall not be less than 50°F or more than 90°F.

3.8.3 Thickness Evaluation

The anticipated thickness of the concrete shall be determined prior to placement by passing a template through the formed section or by measuring the depth of opening of the extrusion template of the curb forming machine. If a slip form paver is used for sidewalk placement, the subgrade shall be true to grade prior to concrete placement and the thickness will be determined by measuring each edge of the completed slab.

3.8.4 Surface Evaluation

The finished surface of each category of the completed work shall be uniform in color and free of blemishes and form or tool marks.

3.9 SURFACE DEFICIENCIES AND CORRECTIONS

3.9.1 Thickness Deficiency

When measurements indicate that the completed concrete section is deficient in thickness by more than 1/4 inch the deficient section will be removed, between regularly scheduled joints, and replaced.

3.9.2 High Areas

In areas not meeting surface smoothness and plan grade requirements, high areas shall be reduced either by rubbing the freshly finished concrete with carborundum brick and water when the concrete is less than 36 hours old or by grinding the hardened concrete with an approved surface grinding machine after the concrete is 36 hours old or more. The area corrected by grinding the surface of the hardened concrete shall not exceed 5 percent of the area of any integral slab, and the depth of grinding shall not exceed 1/4 inch. Pavement areas requiring grade or surface smoothness corrections in excess of the limits specified above shall be removed and replaced.

3.9.3 Appearance

Exposed surfaces of the finished work will be inspected by the Government and any deficiencies in appearance will be identified. Areas which exhibit excessive cracking, discoloration, form marks, or tool marks or which are otherwise inconsistent with the overall appearances of the work shall be removed and replaced.

-- End of Section --

SECTION TABLE OF CONTENTS

DIVISION 32 - EXTERIOR IMPROVEMENTS

SECTION 32 17 24.00 10

PAVEMENT MARKINGS

PART 1 GENERAL

1.1 UNIT PRICES
1.1.1 Measurement
1.1.1.1 Pavement Striping and Markings
1.1.2 Payment
1.2 REFERENCES
1.3 SYSTEM DESCRIPTION
1.3.1 Paint Application Equipment
1.3.1.1 Self-Propelled or Mobile-Drawn Pneumatic Spraying Machines
1.3.1.2 Hand-Operated, Push-Type Machines
1.3.2 Reflective Media Dispenser
1.3.3 Surface Preparation Equipment
1.3.3.1 Sandblasting Equipment
1.3.3.2 Waterblast Equipment
1.3.4 Marking Removal Equipment
1.3.4.1 Shotblasting Equipment
1.3.4.2 Chemical Equipment
1.4 SUBMITTALS
1.5 QUALITY ASSURANCE
1.5.1 Qualifications
1.5.2 Traffic Controls
1.5.3 Maintenance of Traffic
1.5.3.1 Roads, Streets, and Parking Areas
1.6 DELIVERY, STORAGE, AND HANDLING
1.7 ENVIRONMENTAL REQUIREMENTS

PART 2 PRODUCTS

2.1 PAINT
2.2 REFLECTIVE MEDIA
2.3 SAMPLING AND TESTING

PART 3 EXECUTION

3.1 SURFACE PREPARATION
3.1.1 Cleaning Concrete Curing Compounds
3.2 APPLICATION
3.2.1 Paint
3.2.1.1 Rate of Application
3.2.1.2 Drying
3.2.2 Reflective Media

-- End of Section Table of Contents --

SECTION 32 17 24.00 10

PAVEMENT MARKINGS

PART 1 GENERAL

1.1 UNIT PRICES

1.1.1 Measurement

1.1.1.1 Pavement Striping and Markings

The unit of measurement for pavement striping and markings will be the number of lineal feet of reflective striping or marking actually completed and accepted by the Contracting Officer. Surface preparation shall be included in the unit price for pavement markings.

1.1.2 Payment

The quantities of surface preparation, pavement striping or markings determined as specified in paragraph Measurement, will be paid for at the contract unit price. The payment will constitute full compensation for furnishing all labor, materials, tools, equipment, traffic control, appliances, and doing all work involved in marking pavements. Any striping or markings which are placed without reflective media, when reflective media is required, shall be removed and replaced at no cost to the Government. Striping or markings which do not conform to the alignment and/or location required shall be removed and replaced at no cost to the Government.

1.2 REFERENCES

The publications listed below form a part of this specification to the extent referenced. The publications are referred to within the text by the basic designation only.

U.S. GENERAL SERVICES ADMINISTRATION (GSA)

FS TT-P-1952	(Rev E) Paint, Traffic and Airfield Markings, Waterborne

SOUTH DAKOTA DEPARTMENT OF TRANSPORTATION (SDDOT)

1.3 SYSTEM DESCRIPTION

All machines, tools and equipment used in the performance of the work shall be approved and maintained in satisfactory operating condition. Submit lists of proposed equipment, including descriptive data, and notifications of proposed Contractor actions as specified in this section. List of removal equipment shall include descriptive data indicating area of coverage per pass, pressure adjustment range, tank and flow capacities, and safety precautions required for the equipment operation. Equipment operating on roads and runways shall display low speed traffic markings and traffic warning lights.

1.3.1 Paint Application Equipment

1.3.1.1 Self-Propelled or Mobile-Drawn Pneumatic Spraying Machines

The equipment to apply paint to pavements shall be a self-propelled or mobile-drawn pneumatic spraying machine with suitable arrangements of atomizing nozzles and controls to obtain the specified results. The machine shall have a speed during application not less than 5 mph, and shall be capable of applying the stripe widths indicated, at the paint coverage rate specified in paragraph APPLICATION, and of even uniform thickness with clear-cut edges. Equipment used for marking streets and highways shall be capable of placing the prescribed number of lines at a single pass as solid lines, intermittent lines or a combination of solid and intermittent lines using a maximum of two different colors of paint as specified. The paint applicator shall have paint reservoirs or tanks of sufficient capacity and suitable gauges to apply paint in accordance with requirements specified. Tanks shall be equipped with suitable air-driven mechanical agitators. The spray mechanism shall be equipped with quick-action valves conveniently located, and shall include necessary pressure regulators and gauges in full view and reach of the operator. Paint strainers shall be installed in paint supply lines to ensure freedom from residue and foreign matter that may cause malfunction of the spray guns. The paint applicator shall be readily adaptable for attachment of an air-actuated dispenser for the reflective media approved for use. Pneumatic spray guns shall be provided for hand application of paint in areas where the mobile paint applicator cannot be used.

1.3.1.2 Hand-Operated, Push-Type Machines

All machines, tools, and equipment used in performance of the work shall be approved and maintained in satisfactory operating condition. Hand-operated push-type machines of a type commonly used for application of paint to pavement surfaces will be acceptable for marking small streets and parking areas. Applicator machine shall be equipped with the necessary paint tanks and spraying nozzles, and shall be capable of applying paint uniformly at coverage specified. Sandblasting equipment shall be provided as required for cleaning surfaces to be painted. Hand-operated spray guns shall be provided for use in areas where push-type machines cannot be used.

1.3.2 Reflective Media Dispenser

The dispenser for applying the reflective media shall be attached to the paint dispenser and shall operate automatically and simultaneously with the applicator through the same control mechanism. The dispenser shall be capable of adjustment and designed to provide uniform flow of reflective media over the full length and width of the stripe at the rate of coverage specified in paragraph APPLICATION, at all operating speeds of the applicator to which it is attached.

1.3.3 Surface Preparation Equipment

1.3.3.1 Sandblasting Equipment

Sandblasting equipment shall include an air compressor, hoses, and nozzles of proper size and capacity as required for cleaning surfaces to be painted. The compressor shall be capable of furnishing not less than 150 cfm of air at a pressure of not less than 90 psi at each nozzle used, and shall be equipped with traps that will maintain the compressed air free of

oil and water.

1.3.3.2 Waterblast Equipment

The water pressure shall be specified at 2600 psi at 140 degrees F in order to adequately clean the surfaces to be marked.

1.3.4 Marking Removal Equipment

Equipment shall be mounted on rubber tires and shall be capable of removing markings from the pavement without damaging the pavement surface or joint sealant. Waterblasting equipment shall be capable of producing an adjustable, pressurized stream of water. Sandblasting equipment shall include an air compressor, hoses, and nozzles. The compressor shall be equipped with traps to maintain the air free of oil and water.

1.3.4.1 Shotblasting Equipment

Shotblasting equipment shall be capable of producing an adjustable depth of removal of marking and pavement. Each unit shall be self-cleaning and self-contained, shall be able to confine dust and debris from the operation, and shall be capable of recycling the abrasive for reuse.

1.3.4.2 Chemical Equipment

Chemical equipment shall be capable of application and removal of chemicals from the pavement surface, and shall leave only non-toxic biodegradable residue.

1.4 SUBMITTALS

Government approval is required for submittals with a "G" designation; submittals not having a "G" designation are for information only. When used, a designation following the "G" designation identifies the office that will review the submittal for the Government. Submit the following in accordance with Section 01 33 00 SUBMITTAL PROCEDURES:

SD-03 Product Data

Equipment

Qualifications; G

SD-06 Test Reports

Sampling and Testing; G

1.5 QUALITY ASSURANCE

1.5.1 Qualifications

Submit documentation certifying that pertinent personnel are qualified for equipment operation and handling of chemicals.

1.5.2 Traffic Controls

Suitable warning signs shall be placed near the beginning of the worksite and well ahead of the worksite for alerting approaching traffic from both directions. Small markers shall be placed along newly painted lines or

freshly placed raised markers to control traffic and prevent damage to newly painted surfaces or displacement of raised pavement markers. Painting equipment shall be marked with large warning signs indicating slow-moving painting equipment in operation.

1.5.3 Maintenance of Traffic

1.5.3.1 Roads, Streets, and Parking Areas

When traffic must be rerouted or controlled to accomplish the work, the necessary warning signs, flagpersons, and related equipment for the safe passage of vehicles shall be provided.

1.6 DELIVERY, STORAGE, AND HANDLING

All materials shall be delivered and stored in sealed containers that plainly show the designated name, formula or specification number, batch number, color, date of manufacture, manufacturer's name, and directions, all of which shall be plainly legible at time of use.

1.7 ENVIRONMENTAL REQUIREMENTS

Pavement surface shall be free of snow, ice, or slush. Surface temperature shall be at least 40 degrees F and rising at the beginning of operations, except those involving shot or sand blasting. Operation shall cease during thunderstorms. Operation shall cease during rainfall, except for waterblasting and removal of previously applied chemicals. Waterblasting shall cease where surface water accumulation alters the effectiveness of material removal.

PART 2 PRODUCTS

2.1 PAINT

The paint shall be homogeneous, easily stirred to smooth consistency, and shall show no hard settlement or other objectionable characteristics during a storage period of 6 months. Paints for airfields, roads, parking areas, and streets shall conform to FS TT-P-1952, color as indicated. Pavement marking paints shall comply with applicable state and local laws enacted to ensure compliance with Federal Clean Air Standards. Paint materials shall conform to the restrictions of the local Air Pollution Control District. The paint shall be in conformance with 2015 SDDOT Sections 633 and 980.

2.2 REFLECTIVE MEDIA

Reflective media for roads and streets shall conform to 2015 SDDOT Section 633 and 981.

2.3 SAMPLING AND TESTING

Materials proposed for use shall be stored on the project site in sealed and labeled containers, or segregated at source of supply, sufficiently in advance of needs to allow 60 days for testing. Submit certified copies of the test reports, prior to the use of the materials at the jobsite. Testing shall be performed in an approved independent laboratory. Upon notification by the Contractor that the material is at the site or source of supply, a sample shall be taken by random selection from sealed containers in the presence of the Contracting Officer. Samples shall be

clearly identified by designated name, specification number, batch number, manufacturer's formulation number, project contract number, intended use, and quantity involved. Testing shall be performed in an approved independent laboratory. If materials are approved based on reports furnished by the Contractor, samples will be retained by the Government for possible future testing should the material appear defective during or after application.

PART 3 EXECUTION

3.1 SURFACE PREPARATION

Thoroughly clean surfaces to be marked before application of the pavement marking material. Dust, dirt, and other granular surface deposits shall be removed by sweeping, blowing with compressed air, rinsing with water or a combination of these methods as required.

3.1.1 Cleaning Concrete Curing Compounds

On new portland cement concrete pavements, cleaning operations shall not begin until a minimum of 30 days after the placement of concrete. All new concrete pavements shall be cleaned by either sandblasting or water blasting. When water blasting is performed, thermoplastic and preformed markings shall be applied no sooner than 24 hours after the blasting has been completed. The extent of the blasting work shall be to clean and prepare the concrete surface as follows:

a. There is no visible evidence of curing compound on the peaks of the textured concrete surface.

b. There are no heavy puddled deposits of curing compound in the valleys of the textured concrete surface.

c. All remaining curing compound is intact; all loose and flaking material is removed.

d. The peaks of the textured pavement surface are rounded in profile and free of sharp edges and irregularities.

e. The surface to be marked is dry.

3.2 APPLICATION

All pavement markings and patterns shall be placed as shown on the plans.

3.2.1 Paint

Paint application shall follow 2015 SDDOT Section 633.

3.2.1.1 Rate of Application

a. Reflective Markings: Pigmented binder shall be applied evenly to the pavement area to be coated at a rate of 105 plus or minus 5 square feet/gallon. Glass spheres shall be applied uniformly to the wet paint on road and street pavement at a rate of 6 plus or minus 0.5 pounds of glass spheres per gallon of paint.

3.2.1.2 Drying

The maximum drying time requirements of the paint specifications will be strictly enforced to prevent undue softening of bitumen, and pickup, displacement, or discoloration by tires of traffic. If there is a delay in drying of the markings, painting operations shall be discontinued until cause of the slow drying is determined and corrected.

3.2.2 Reflective Media

Application of reflective media shall immediately follow application of pigmented binder. Drop-on application of glass spheres shall be accomplished to insure that reflective media is evenly distributed at the specified rate of coverage. Should there be malfunction of either paint applicator or reflective media dispenser, operations shall be discontinued immediately until deficiency is corrected.

-- End of Section --

This page was intentionally left blank for duplex printing.

SECTION TABLE OF CONTENTS

DIVISION 32 - EXTERIOR IMPROVEMENTS

SECTION 32 92 19

SEEDING

PART 1 GENERAL

1.1 REFERENCES
1.2 RELATED REQUIREMENTS
1.3 SUBMITTALS
1.4 DELIVERY, STORAGE, AND HANDLING
1.4.1 Delivery
1.4.1.1 Seed Protection
1.5 TIME LIMITATIONS
1.5.1 Seed
1.6 PAYMENT

PART 2 PRODUCTS

2.1 SEED
2.1.1 Classification
2.1.2 Seed Mixture by Weight
2.2 TOPSOIL
2.2.1 On-Site Topsoil
2.2.2 Off-Site Topsoil
2.3 FERTILIZER
2.3.1 Fertilizer
2.4 MULCH
2.4.1 Straw
2.4.2 Hay
2.4.3 Wood Cellulose Fiber Mulch
2.5 Erosion Blanket
2.6 WATER

PART 3 EXECUTION

3.1 PREPARATION
3.1.1 EXTENT OF WORK
3.1.1.1 Topsoil
3.1.1.2 Fertilizer Application Rates
3.2 SEEDING
3.2.1 Seed Application Seasons and Conditions
3.2.2 Seed Application Method
3.2.2.1 Broadcast and Drop Seeding
3.2.2.2 Drill Seeding
3.2.2.3 Hydroseeding
3.2.3 Mulching
3.2.3.1 Hay or Straw Mulch
3.2.3.2 Mechanical Anchor
3.2.4 Rolling
3.3 Satisfactory Stand of Grass Plants

3.4 RESTORATION

-- End of Section Table of Contents --

SECTION 32 92 19

SEEDING

PART 1 GENERAL

1.1 REFERENCES

The publications listed below form a part of this specification to the extent referenced. The publications are referred to within the text by the basic designation only.

U.S. DEPARTMENT OF AGRICULTURE (USDA)

AMS Seed Act (1940; R 1988; R 1998) Federal Seed Act

SOUTH DAKOTA DEPARTMENT OF TRANSPORTATION (SDDOT)

1.2 RELATED REQUIREMENTS

Section 31 00 00 EARTHWORK applies to this section for pesticide use and plant establishment requirements, with additions and modifications herein.

1.3 SUBMITTALS

Government approval is required for submittals with a "G" designation; submittals not having a "G" designation are for information only. When used, a designation following the "G" designation identifies the office that will review the submittal for the Government. Submit the following in accordance with Section 01 33 00 SUBMITTAL PROCEDURES:

SD-03 Product Data

Wood cellulose fiber mulch; G

Fertilizer; G

Include physical characteristics, and recommendations.

SD-07 Certificates

State certification and approval for seed; G

1.4 DELIVERY, STORAGE, AND HANDLING

1.4.1 Delivery

1.4.1.1 Seed Protection

Protect from drying out and from contamination during delivery, on-site storage, and handling.

1.5 TIME LIMITATIONS

1.5.1 Seed

Apply seed within twenty four hours after seed bed preparation.

1.6 PAYMENT

Payment for fertilizer and mulch is to be incidental to the seeding cost per square yard. Payment for erosion blanket is per square yard as seen on bid sheet.

PART 2 PRODUCTS

2.1 SEED

2.1.1 Classification

Provide State-approved seed of the latest season's crop delivered in original sealed packages, bearing producer's guaranteed analysis for percentages of mixtures, purity, germination, weed seed content, and inert material. Label in conformance with AMS Seed Act and applicable state seed laws.

2.1.2 Seed Mixture by Weight

Permanent seed species and mixtures shall be proportioned by weight as follows:

LAWN SEED

Mixture Common Name/Botanical Name	Percent by Weight	Pounds Pure Live Seed/Acre
Kentucky Bluegrass/Poa pratensis(Park)	60	51
Creeping Red Fescue/Festuca rubra	20	17
Perenial Ryegrass/Lolium perenne	20	17
Total	100	85

FIELD SEED

Mixture Common Name	(Where Grown)	Percent by Weight	Pounds Pure Live Seed/Acre
Western Wheat	Montana	21.9	6
Forestburg Switchgrass	South Dakota	24.8	8
Oahe Inert Wheatgrass	South Dakota	23.8	7
YB Sweet Clover	Canada	24.9	8
Inert Material		4.6	0
Total		100	29

Proportion seed mixtures by weight. Temporary seeding must later be replaced by plantings for a permanent stand of grass. The same requirements of turf establishment for apply for temporary seeding.

2.2 TOPSOIL

2.2.1 On-Site Topsoil

Surface soil stripped and stockpiled on site and modified as necessary to meet the requirements specified. When available topsoil shall be existing surface soil stripped and stockpiled on-site in accordance with Section 31 00 00 EARTHWORK.

2.2.2 Off-Site Topsoil

Conform to requirements specified for Additional topsoil furnished by the Contractor .

2.3 FERTILIZER

2.3.1 Fertilizer

Refer to 2015 SDDOT section 731.

2.4 MULCH

Mulch shall conform to 2015 SDDOT Section 732.

2.4.1 Straw

Stalks from oats, wheat, rye, barley, or rice. Furnish in air-dry condition and of proper consistency for placing with commercial mulch blowing equipment. Straw shall contain no fertile seed.

2.4.2 Hay

Air-dry condition and of proper consistency for placing with commercial mulch blowing equipment. Hay shall be sterile, containing no fertile seed.

2.4.3 Wood Cellulose Fiber Mulch

Use recovered materials of either paper-based (100 percent) or wood-based (100 percent) hydraulic mulch. Processed to contain no growth or germination-inhibiting factors and dyed an appropriate color to facilitate visual metering of materials application. Composition on air-dry weight basis: 9 to 15 percent moisture, pH range from 5.5 to 8.2

2.5 Erosion Blanket

Erosion blanket shall be Western Excelsior, Excel SS-2 or approved equivalent.

2.6 WATER

Source of water shall be approved by Contracting Officer and of suitable quality for irrigation, containing no elements toxic to plant life.

PART 3 EXECUTION

3.1 PREPARATION

3.1.1 EXTENT OF WORK

Provide soil preparation (including soil conditioners as required), fertilizing, seeding, and surface topdressing of all newly graded finished earth surfaces, unless indicated otherwise, and at all areas inside or outside the limits of construction that are disturbed by the Contractor's operations.

3.1.1.1 Topsoil

Provide 4 inches of off-site topsoil or on-site topsoil to meet indicated finish grade. After areas have been brought to indicated finish grade, incorporate fertilizer into soil a minimum depth of 4 inches by disking, harrowing, tilling or other method approved by the Contracting Officer. Remove debris and stones larger than 3/4 inch in any dimension remaining on the surface after finish grading. Correct irregularities in finish surfaces to eliminate depressions. Protect finished topsoil areas from damage by vehicular or pedestrian traffic.

3.1.1.2 Fertilizer Application Rates

Apply fertilizer at rates here in specified. Fertilizer shall be applied at 350 pounds per acre. Fertilizer shall be incorporated in to the soil to a maximum depth of 4 inches or may be incorporated as part of the tillage or hydroseeding process.

3.2 SEEDING

3.2.1 Seed Application Seasons and Conditions

Immediately before seeding, restore soil to proper grade. Do not seed when ground is muddy frozen or in an unsatisfactory condition for seeding. If special conditions exist that may warrant a variance in the above seeding dates or conditions, submit a written request to the Contracting Officer stating the special conditions and proposed variance. Apply seed within twenty four hours after seedbed preparation. Sow seed by approved sowing equipment. Sow one-half the seed in one direction, and sow remainder at right angles to the first sowing.

3.2.2 Seed Application Method

Seeding method shall be broadcasted and drop seeding, drill seeding, or hydroseeding.

3.2.2.1 Broadcast and Drop Seeding

Seed shall be uniformly broadcast at the rate specified using broadcast seeders. Use broadcast or drop seeders. Sow one-half the seed in one direction, and sow remainder at right angles to the first sowing. Cover seed uniformly to a maximum depth of 1/4 inch in clay soils by means of spike-tooth harrow, cultipacker, raking or other approved devices.

3.2.2.2 Drill Seeding

Seed shall be drilled at the rate specified. Use cultipacker seeders grass seed drills . Drill seed uniformly to average depth of 1/2 inch.

3.2.2.3 Hydroseeding

First, mix water and fiber. Wood cellulose fiber, paper fiber, or recycled paper shall be applied as part of the hydroseeding operation. Fiber shall be added at 1,000 pounds, dry weight, per acre. Then add and mix seed and fertilizer to produce a homogeneous slurry. Seed shall be mixed to ensure broadcasting at the rate specified. When hydraulically sprayed on the ground, material shall form a blotter like cover impregnated uniformly with grass seed. Spread with one application with no second application of mulch.

3.2.3 Mulching

3.2.3.1 Hay or Straw Mulch

Hay or straw mulch shall be spread uniformly at the rate of 2 tons per acre. Mulch shall be spread by hand, blower-type mulch spreader, or other approved method. Mulching shall be started on the windward side of relatively flat areas or on the upper part of steep slopes, and continued uniformly until the area is covered. The mulch shall not be bunched or clumped. Sunlight shall not be completely excluded from penetrating to the ground surface. All areas installed with seed shall be mulched on the same day as the seeding. Mulch shall be anchored immediately following spreading.

3.2.3.2 Mechanical Anchor

Mechanical anchor shall be a V-type-wheel land packer; a scalloped-disk land packer designed to force mulch into the soil surface; or other suitable equipment.

3.2.4 Rolling

Immediately after seeding, firm entire area except for slopes in excess of 3 to 1 with a roller not exceeding 90 pounds for each foot of roller width. If seeding is performed with cultipacker-type seeder or by hydroseeding, rolling may be eliminated.

3.3 Satisfactory Stand of Grass Plants

Grass plants may be evaluated for species and health. A satisfactory stand of grass plants from the seeding operation shall be living grass uniform in color and leaf texture. Bare spots shall be a maximum 72 inches square, and shall not exceed 2 percent of the total area. Unsatisfactory stand of grass may require reseeding at the discretion of the COR at no additional cost to the Government.

3.4 RESTORATION

Restore to original condition existing turf areas which have been damaged during turf installation operations at the Contractor's expense. Keep clean at all times at least one paved pedestrian access route and one paved vehicular access route to each building. Clean other paving when work in adjacent areas is complete.

-- End of Section --

This page was intentionally left blank for duplex printing.

SECTION TABLE OF CONTENTS

DIVISION 32 - EXTERIOR IMPROVEMENTS

SECTION 32 97 00.00 24

CRUSHING ASPHALT MIX MATERIAL

PART 1 GENERAL

1.1 REFERENCES
1.2 DESCRIPTION
1.3 MATERIALS
1.4 CONSTRUCTION REQUIREMENTS
1.4.1 Stockpile Asphalt Mix and Granular Base Material
1.4.2 Stockpile Asphalt Mix Material
1.5 Measurement
1.6 Payment

PART 2 PRODUCTS (NOT USED)

PART 3 EXECUTION (NOT USED)

-- End of Section Table of Contents --

SECTION 32 97 00.00 24

CRUSHING ASPHALT MIX MATERIAL

PART 1 GENERAL

1.1 REFERENCES

The publications listed below form a part of this specification to the extent referenced. The publications are referred to within the text by the basic designation only.

SOUTH DAKOTA DEPARTMENT OF TRANSPORTATION (SDDOT)

SDDOT (2025) Standard Specification for Road and Bridges

1.2 DESCRIPTION

The work includes all material, equipment and labor used for crushing and stockpiling as per specifications. Work also includes all necessary operations to load crusher, crush, and stockpile all asphalt mix material located at USACE Oahe gravel pit. See specification section 32 11 23 titled: Aggregate Material.

1.3 MATERIALS

Salvaged material will meet the requirements of Section 884 of the 2025 South Dakota Standard Specification for Road and Bridges (SDDOT).

1.4 CONSTRUCTION REQUIREMENTS

Asphalt mix and granular base material salvaged and placed into a stockpile will conform to the following gradation:

Sieve Size	Percent Passing
1 1/2 inch	100
1 inch	95-100

1.4.1 Stockpile Asphalt Mix and Granular Base Material

Asphalt concrete mix and granular material will be processed or crushed and stockpiled together so that a uniform blend is obtained. Prior to stockpiling, the stockpile site will be prepared by removal of the top 6 inches of topsoil and the area bladed smooth.

1.4.2 Stockpile Asphalt Mix Material

Salvaged asphalt mix material will be processed or crushed and stockpiled so a uniform blend is obtained. Prior to stockpiling, the stockpile site will be prepared by removal of the top 6 inches of topsoil and the area bladed smooth. Stockpiles will be constructed in accordance with Section 320.3 C of the South Dakota Standard Specification for Road and Bridges.

The stockpiles will not contain dirt, grease, oil, brick, paving fabric, clay balls, organic debris, and other foreign material.

1.5 Measurement

Per ton. Crushing Asphalt Mix Material (Stockpiled) will be measured for payment by the number of tons of material satisfactorily crushed and stockpiled as specified. Material weighed: (1) on public or private scales which have been certified by the State. The Contractor shall furnish the Government Inspector a copy of each printed weigh bill when self printing scales are used, or a copy signed by a public or bonded weigh master as each load is delivered; or (2) material may be weighed on the Contractor-furnished scales under the supervision of the Government Inspector. (3) material may be weighed using a loader scale that is calibrated on a weekly basis and the calibration ticket must be submitted to the government. Each printed weigh bill shall contain the following: date, time, unit number, gross, tare and net weight, name of project, contractor, contract number and signature of bonded weigh master. All material shall be weighed to the nearest 20 pounds and the net weight reduced to the nearest hundredth of a ton.

1.6 Payment

Payment for crushed asphalt mix material (stockpiled) shall be based on the unit price per ton as indicated on the Bidding Schedule multiplied by the number of tons needed to complete the required work according to drawings and specifications.

PART 2 PRODUCTS (NOT USED)

PART 3 EXECUTION (NOT USED)

-- End of Section --

This page was intentionally left blank for duplex printing.

SECTION TABLE OF CONTENTS

DIVISION 33 - UTILITIES

SECTION 33 40 00

STORM DRAINAGE UTILITIES

PART 1 GENERAL

1.1 MEASUREMENT AND PAYMENT
1.1.1 Pipe Culverts and Storm Drains
1.1.2 Flared End Sections
1.1.3 Rock Excavation
1.1.4 Backfill Replacing Unstable Material
1.2 REFERENCES
1.3 SUBMITTALS
1.4 DELIVERY, STORAGE, AND HANDLING
1.4.1 Delivery and Storage
1.4.2 Handling

PART 2 PRODUCTS

2.1 PIPE FOR CULVERTS AND STORM DRAINS
2.1.1 Corrugated Steel Pipe
2.2 DRAINAGE STRUCTURES
2.2.1 Flared End Sections
2.3 MISCELLANEOUS MATERIALS
2.3.1 Joints
2.3.1.1 External Sealing Bands

PART 3 EXECUTION

3.1 EXCAVATION FOR PIPE CULVERTS, STORM DRAINS, AND DRAINAGE STRUCTURES
3.1.1 Trenching
3.1.2 Removal of Rock
3.1.3 Removal of Unstable Material
3.2 BEDDING
3.2.1 Corrugated Metal Pipe
3.3 PLACING PIPE
3.3.1 Corrugated Metal Pipe and Pipe Arch
3.3.2 Multiple Culverts
3.3.3 Jacking Pipe Through Fills
3.4 JOINTING
3.4.1 Corrugated Metal Pipe
3.4.1.1 Field Joints
3.5 BACKFILLING
3.5.1 Backfilling Pipe in Trenches
3.5.2 Backfilling Pipe in Fill Sections
3.5.3 Movement of Construction Machinery
3.5.4 Compaction
3.5.4.1 General Requirements
3.5.4.2 Minimum Density
3.5.5 Determination of Density

-- End of Section Table of Contents --

SECTION 33 40 00

STORM DRAINAGE UTILITIES

PART 1 GENERAL

1.1 MEASUREMENT AND PAYMENT

1.1.1 Pipe Culverts and Storm Drains

The length of pipe installed will be measured along the centerlines of the pipe from end to end of pipe without deductions for diameter of manholes. Pipe will be paid for at the contract unit price for the number of linear feet of culverts or storm drains placed in the accepted work. The unit price for pipe installed shall include cost of bedding material per lineal foot.

1.1.2 Flared End Sections

Flared end sections will be measured by the unit. Flared end sections will be paid for at the contract unit price for the various sizes in the accepted work.

1.1.3 Rock Excavation

Payment will be made for the number of cubic yards of material acceptably excavated, as specified and defined as rock excavation in Section 31 00 00 EARTHWORK, measured in the original position, and computed by allowing actual width of rock excavation with the following limitations: maximum rock excavation width, 30 inches for pipe of 12 inch or less nominal diameter; maximum rock excavation width, 16 inches greater than outside diameter of pipe of more than 12 inch nominal diameter. Measurement will include authorized overdepth excavation. Payment will also include all necessary drilling and blasting, and all incidentals necessary for satisfactory excavation and disposal of authorized rock excavation. No separate payment will be made for backfill material required to replace rock excavation; this cost shall be included in the Contractor's unit price bid per cubic yard for rock excavation. In rock excavation for manholes and other appurtenances, 1 foot will be allowed outside the wall lines of the structures.

1.1.4 Backfill Replacing Unstable Material

Payment will be made for the number of tons of select granular material required to replace unstable material for foundations under pipes or drainage structures, which will constitute full compensation for this backfill material, including removal and disposal of unstable material and all excavating, hauling, placing, compacting, and all incidentals necessary to complete the construction of the foundation satisfactorily.

1.2 REFERENCES

The publications listed below form a part of this specification to the extent referenced. The publications are referred to within the text by the basic designation only.

AMERICAN ASSOCIATION OF STATE HIGHWAY AND TRANSPORTATION OFFICIALS (AASHTO)

AASHTO M 190	(2004; R 2012) Standard Specification for Bituminous Coated Corrugated Metal Culvert Pipe and Pipe Arches
AASHTO M 243	(1996; R 2012) Standard Specification for Field-Applied Coating of Corrugated Metal Structural Plate for Pipe, Pipe-Arches, and Arches

ASTM INTERNATIONAL (ASTM)

ASTM A760/A760M	(2013) Standard Specification for Corrugated Steel Pipe, Metallic-Coated for Sewers and Drains
ASTM A798/A798M	(2013) Standard Practice for Installing Factory-Made Corrugated Steel Pipe for Sewers and Other Applications
ASTM A807/A807M	(2013) Standard Practice for Installing Corrugated Steel Structural Plate Pipe for Sewers and Other Applications
ASTM A929/A929M	(2001; R 2013) Standard Specification for Steel Sheet, Metallic-Coated by the Hot-Dip Process for Corrugated Steel Pipe
ASTM C877	(2008) External Sealing Bands for Concrete Pipe, Manholes, and Precast Box Sections
ASTM D1557	(2012) Standard Test Methods for Laboratory Compaction Characteristics of Soil Using Modified Effort (56,000 ft-lbf/ft3) (2700 kN-m/m3)
ASTM D2167	(2008) Density and Unit Weight of Soil in Place by the Rubber Balloon Method
ASTM D6938	(2010) Standard Test Method for In-Place Density and Water Content of Soil and Soil-Aggregate by Nuclear Methods (Shallow Depth)

1.3 SUBMITTALS

Government approval is required for submittals with a "G" designation; submittals not having a "G" designation are for information only. When used, a designation following the "G" designation identifies the office that will review the submittal for the Government. Submit the following in accordance with Section 01 33 00 SUBMITTAL PROCEDURES:

SD-03 Product Data

Placing Pipe

Submit printed copies of the manufacturer's recommendations for installation procedures of the material being placed, prior to installation.
G

SD-04 Samples

Pipe for Culverts and Storm Drains; G

SD-07 Certificates

Determination of Density; G

1.4 DELIVERY, STORAGE, AND HANDLING

1.4.1 Delivery and Storage

Materials delivered to site shall be inspected for damage, unloaded, and stored with a minimum of handling. Materials shall not be stored directly on the ground. The inside of pipes and fittings shall be kept free of dirt and debris. Before, during, and after installation, plastic pipe and fittings shall be protected from any environment that would result in damage or deterioration to the material. Keep a copy of the manufacturer's instructions available at the construction site at all times and follow these instructions unless directed otherwise by the Contracting Officer. Solvents, solvent compounds, lubricants, elastomeric gaskets, and any similar materials required to install plastic pipe shall be stored in accordance with the manufacturer's recommendations and shall be discarded if the storage period exceeds the recommended shelf life. Solvents in use shall be discarded when the recommended pot life is exceeded.

1.4.2 Handling

Materials shall be handled in a manner that ensures delivery to the trench in sound, undamaged condition. Pipe shall be carried to the trench, not dragged.

PART 2 PRODUCTS

2.1 PIPE FOR CULVERTS AND STORM DRAINS

Pipe for culverts and storm drains shall be of the sizes indicated and shall conform to the requirements specified.

2.1.1 Corrugated Steel Pipe

ASTM A760/A760M, zinc or aluminum (Type 2) coated pipe of either:

a. Type I II pipe with annular and/or helical 2-2/3 by 1/2 inch corrugations.

2.2 DRAINAGE STRUCTURES

2.2.1 Flared End Sections

Sections shall be of a standard design fabricated from zinc coated steel

sheets meeting requirements of ASTM A929/A929M.

2.3 MISCELLANEOUS MATERIALS

2.3.1 Joints

2.3.1.1 External Sealing Bands

Requirements for external sealing bands shall conform to ASTM C877.

PART 3 EXECUTION

3.1 EXCAVATION FOR PIPE CULVERTS, STORM DRAINS, AND DRAINAGE STRUCTURES

Excavation of trenches, and for appurtenances and backfilling for culverts and storm drains, shall be in accordance with the applicable portions of Section 31 00 00 EARTHWORK and the requirements specified below.

3.1.1 Trenching

The width of trenches at any point below the top of the pipe shall be not greater than the outside diameter of the pipe plus 18 inches to permit satisfactory jointing and thorough tamping of the bedding material under and around the pipe. Sheeting and bracing, where required, shall be placed within the trench width as specified, without any overexcavation. Where trench widths are exceeded, redesign with a resultant increase in cost of stronger pipe or special installation procedures will be necessary. Cost of this redesign and increased cost of pipe or installation shall be borne by the Contractor without additional cost to the Government.

3.1.2 Removal of Rock

Rock in either ledge or boulder formation shall be replaced with suitable materials to provide a compacted earth cushion having a thickness between unremoved rock and the pipe of at least 8 inches or 1/2 inch for each foot of fill over the top of the pipe, whichever is greater, but not more than three-fourths the nominal diameter of the pipe. Where bell-and-spigot pipe is used, the cushion shall be maintained under the bell as well as under the straight portion of the pipe. Rock excavation shall be as specified and defined in Section 31 00 00 EARTHWORK.

3.1.3 Removal of Unstable Material

Where wet or otherwise unstable soil incapable of properly supporting the pipe, as determined by the Contracting Officer, is unexpectedly encountered in the bottom of a trench, such material shall be removed to the depth required and replaced to the proper grade with select granular material, compacted as provided in paragraph BACKFILLING. When removal of unstable material is due to the fault or neglect of the Contractor while performing shoring and sheeting, water removal, or other specified requirements, such removal and replacement shall be performed at no additional cost to the Government.

3.2 BEDDING

The bedding surface for the pipe shall provide a firm foundation of uniform density throughout the entire length of the pipe.

3.2.1 Corrugated Metal Pipe

Bedding for corrugated metal pipe and pipe arch shall be in accordance with ASTM A798/A798M. It is not required to shape the bedding to the pipe geometry. However, for pipe arches, either shape the bedding to the relatively flat bottom arc or fine grade the foundation to a shallow v-shape. Bedding for corrugated structural plate pipe shall meet requirements of ASTM A807/A807M.

3.3 PLACING PIPE

Each pipe shall be thoroughly examined before being laid; defective or damaged pipe shall not be used. Plastic pipe, excluding SRPE pipe shall be protected from exposure to direct sunlight prior to laying, if necessary to maintain adequate pipe stiffness and meet installation deflection requirements. Pipelines shall be laid to the grades and alignment indicated. Proper facilities shall be provided for lowering sections of pipe into trenches. Lifting lugs in vertically elongated metal pipe shall be placed in the same vertical plane as the major axis of the pipe. Pipe shall not be laid in water, and pipe shall not be laid when trench conditions or weather are unsuitable for such work. Diversion of drainage or dewatering of trenches during construction shall be provided as necessary. Deflection of installed flexible pipe shall not exceed the following limits:

TYPE OF PIPE	MAXIMUM ALLOWABLE DEFLECTION (percent)
Corrugated Steel and Aluminum Alloy	5
Concrete-Lined Corrugated Steel	3
Ductile Iron Culvert	3
Plastic (PVC, HDPE, SRPE, and PP)	5

3.3.1 Corrugated Metal Pipe and Pipe Arch

Laying shall be with the separate sections joined firmly together, with the outside laps of circumferential joints pointing upstream, and with longitudinal laps on the sides. Part paved pipe shall be installed so that the centerline of bituminous pavement in the pipe, indicated by suitable markings on the top at each end of the pipe sections, coincides with the specified alignment of pipe. Fully paved steel pipe or pipe arch shall have a painted or otherwise applied label inside the pipe or pipe arch indicating sheet thickness of pipe or pipe arch. Any unprotected metal in the joints shall be coated with bituminous material as specified in AASHTO M 190 or AASHTO M 243. Interior coating shall be protected against damage from insertion or removal of struts or tie wires. Lifting lugs shall be used to facilitate moving pipe without damage to exterior or interior coatings. During transportation and installation, pipe or pipe arch and coupling bands shall be handled with care to preclude damage to the coating, paving or lining. Damaged coatings, pavings and linings shall be repaired in accordance with the manufacturer's recommendations prior to placing backfill. Pipe on which coating, paving or lining has been damaged to such an extent that satisfactory field repairs cannot be made shall be removed and replaced. Vertical elongation, where indicated,

shall be accomplished by factory elongation. Suitable markings or properly placed lifting lugs shall be provided to ensure placement of factory elongated pipe in a vertical plane.

3.3.2 Multiple Culverts

Where multiple lines of pipe are installed, adjacent sides of pipe shall be at least half the nominal pipe diameter or 3 feet apart, whichever is less.

3.3.3 Jacking Pipe Through Fills

Methods of operation and installation for jacking pipe through fills shall conform to requirements specified in Volume 1, Chapter 1, Part 4 of AREMA Eng Man.

3.4 JOINTING

3.4.1 Corrugated Metal Pipe

3.4.1.1 Field Joints

Transverse field joints shall be designed so that the successive connection of pipe sections will form a continuous line free of appreciable irregularities in the flow line. In addition, the joints shall meet the general performance requirements described in ASTM A798/A798M. Suitable transverse field joints which satisfy the requirements for one or more of the joint performance categories can be obtained with the following types of connecting bands furnished with suitable band-end fastening devices: corrugated bands, bands with projections, flat bands, and bands of special design that engage factory reformed ends of corrugated pipe. The space between the pipe and connecting bands shall be kept free from dirt and grit so that corrugations fit snugly. The connecting band, while being tightened, shall be tapped with a soft-head mallet of wood, rubber or plastic, to take up slack and ensure a tight joint. Field joints for each type of corrugated metal pipe shall maintain pipe alignment during construction and prevent infiltration of fill material during the life of the installations. The type, size, and sheet thickness of the band and the size of angles or lugs and bolts shall be as indicated or where not indicated, shall be as specified in the applicable standards or specifications for the pipe.

3.5 BACKFILLING

3.5.1 Backfilling Pipe in Trenches

After the pipe has been properly bedded, selected material from excavation or borrow, at a moisture content that will facilitate compaction, shall be placed along both sides of pipe in layers not exceeding 6 inches in compacted depth. The backfill shall be brought up evenly on both sides of pipe for the full length of pipe. The fill shall be thoroughly compacted under the haunches of the pipe. Each layer shall be thoroughly compacted with mechanical tampers or rammers. This method of filling and compacting shall continue until the fill has reached an elevation equal to the midpoint (spring line) of RCP or has reached an elevation of at least 12 inches above the top of the pipe for flexible pipe. The remainder of the trench shall be backfilled and compacted by spreading and rolling or compacted by mechanical rammers or tampers in layers not exceeding 12

inches. Tests for density shall be made as necessary to ensure conformance to the compaction requirements specified below. Where it is necessary, in the opinion of the Contracting Officer, that sheeting or portions of bracing used be left in place, the contract will be adjusted accordingly. Untreated sheeting shall not be left in place beneath structures or pavements.

3.5.2 Backfilling Pipe in Fill Sections

For pipe placed in fill sections, backfill material and the placement and compaction procedures shall be as specified below. The fill material shall be uniformly spread in layers longitudinally on both sides of the pipe, not exceeding 6 inches in compacted depth, and shall be compacted by rolling parallel with pipe or by mechanical tamping or ramming. Prior to commencing normal filling operations, the crown width of the fill at a height of 12 inches above the top of the pipe shall extend a distance of not less than twice the outside pipe diameter on each side of the pipe or 12 feet, whichever is less. After the backfill has reached at least 12 inches above the top of the pipe, the remainder of the fill shall be placed and thoroughly compacted in layers not exceeding 12 inches. Use select granular material for this entire region of backfill for flexible pipe installations.

3.5.3 Movement of Construction Machinery

When compacting by rolling or operating heavy equipment parallel with the pipe, displacement of or injury to the pipe shall be avoided. Movement of construction machinery over a culvert or storm drain at any stage of construction shall be at the Contractor's risk. Any damaged pipe shall be repaired or replaced.

3.5.4 Compaction

3.5.4.1 General Requirements

Cohesionless materials include gravels, gravel-sand mixtures, sands, and gravelly sands. Cohesive materials include clayey and silty gravels, gravel-silt mixtures, clayey and silty sands, sand-clay mixtures, clays, silts, and very fine sands. When results of compaction tests for moisture-density relations are recorded on graphs, cohesionless soils will show straight lines or reverse-shaped moisture-density curves, and cohesive soils will show normal moisture-density curves.

3.5.4.2 Minimum Density

Backfill over and around the pipe and backfill around and adjacent to drainage structures shall be compacted at the approved moisture content to the following applicable minimum density, which will be determined as specified below.

a. Under unpaved or turfed traffic areas, density shall not be less than 90 percent of maximum density for cohesive material and 95 percent of maximum density for cohesionless material.

b. Under nontraffic areas, density shall be not less than that of the surrounding material.

3.5.5 Determination of Density

Testing is the responsibility of the Contractor and performed at no additional cost to the Government. Testing shall be performed by an approved commercial testing laboratory or by the Contractor subject to approval. Tests shall be performed in sufficient number to ensure that specified density is being obtained. Laboratory tests for moisture-density relations shall be made in accordance with ASTM D1557 except that mechanical tampers may be used provided the results are correlated with those obtained with the specified hand tamper. Field density tests shall be determined in accordance with ASTM D2167 or ASTM D6938. When ASTM D6938 is used, the calibration curves shall be checked and adjusted, if necessary, using the sand cone method as described in paragraph Calibration of the referenced publications. ASTM D6938 results in a wet unit weight of soil and ASTM D6938 shall be used to determine the moisture content of the soil. The calibration curves furnished with the moisture gauges shall be checked along with density calibration checks as described in ASTM D6938. Test results shall be furnished the Contracting Officer. The calibration checks of both the density and moisture gauges shall be made at the beginning of a job on each different type of material encountered and at intervals as directed.

-- End of Section --