Uninterruptible Power Supply (UPS) Update and Downstream Panels

Solicitation # 140R6026R0008

Wyoming Area Office, Mills, Wyoming

Missouri Basin Region

U.S. Department of the Interior May 2026

WY CCC UPS & Breaker Replacement
Mills, WY

FOREWORD

The Bureau of Reclamation (Reclamation) has a requirement to replace and update the Uninterruptible Power Supply (UPS) and Downstream Pannels at the Wyoming Area Office. The location is in Mills, Wyoming, in Natrona County. The scope of this Firm Fixed Price contract is for services as identified in the specifications in Section J, Attachments.

Point of Contact

The Contract Officer for this requirement is Terra Warren. All questions and correspondence concerning this solicitation shall be directed to her via email at terra_warren@ios.doi.gov, identifying the solicitation number in the subject line. Telephone correspondence concerning this solicitation will not be accepted for recording purposes. It is incumbent upon offerors to monitor https://sam.gov for the solicitation release and all subsequent amendments

Method of Procurement

This requirement is solicited as a Request for Proposal (RFP) using the Federal Acquisition Regulation (FAR) part 15 – Contracting by Negotiation and FAR part 36 – Construction and Architect-Engineer Contract.

Offerors are cautioned to carefully review the offer submission requirements. To be considered qualified for this work, offerors must fully address all evaluation factors.

The Government anticipates making award without discussions. However, the Government reserves the right to conduct discussions if the Contracting Officer determines them to be necessary. Therefore, the offeror's initial proposal should contain the offeror's best terms from a cost or price and technical standpoint.

This acquisition will be a total small business set-aside with limitations to subcontracting in accordance with FAR Overhaul clause 52.219-14.

Site Visit

An organized site visit has been scheduled for **May 27, 2026 at 9:30 AM MDT**. Prospective offerors are strongly encouraged to attend the pre-proposal site visit to gain a better understanding of the work requirements and site conditions. Prospective offerors that are interested in attending shall contact Terra Warren at, Terra_warren@ios.doi.gov by May 20th, 2026.

Offeror Questions

The Government will not address questions received from prospective offerors at the organized site visit for recording purposes. The Government will not address questions received from prospective offerors after **11:59 PM MDT on Jun 7th, 2026**. The Government's answers to questions received will be addressed in an amendment to the solicitation. Telephone questions will not be accepted for recording purposes.

All questions shall be submitted electronically via email to Terra Warren, Contract Specialist at terra_warren@ios.doi.gov. Answers will be provided only to questions submitted in writing, and all answers will be provided via amendment through the SAM website at www.sam.gov

Proposal Due date

Proposal shall be submitted electronically via email to Terra Warren, Contract Specialist at terra_warren@ios.doi.gov. by **11:59PM MDT on June 24th, 2026.** Late proposals will not be accepted.

Reclamation Safety and Health Standards (RSHS)
For information regarding the Bureau of Reclamation's publication, "Reclamation Safety and Health Standards," including revisions located at https://www.usbr.gov/safety/rshs/index.html (which is applicable to work under this contract), see the clause at Section I, Paragraph I.10., WBR 1452.223-81 – Safety and Health – Bureau of Reclamation.

Background and Security checks
Background checks and security clearance will be required of all the awardee's employees entering the facility, upon start of the contract. Please refer to section L.11, WBR 1452.237-80 Alt III. This process may impact the awardee's start date after notice-to-proceed.

System for Award Management (SAM)
Effective October 2018, all contractors interested in doing business with the Federal Government must be registered in the System for Award Management (SAM) database at the time they submit their offer/proposal.

NOTE: Registering in SAM does not constitute an automatic award of any contract or agreement to the registering contractor. SAM is a centralized database for consolidating the Central Contractor Registration (CCR), the Online Representation and Certifications Application (ORCA), and the Excluded Parties List System (EPLS). Additionally, the contractor's business and financial information are required for SAM registration and annual confirmation requirements, which must be accomplished through the SAM website at https://sam.gov/. For assistance with registering in SAM, contact the Federal Service Helpdesk website at https://www.fsd.gov/gsafsd_sp or by telephone at 1-866-606-8220.

NOTE: System updates may lag policy updates. The System for Award Management (SAM) may continue to require entities to complete representations based on provisions that are not included in agency solicitations. Contracting Officers will not consider these representations when making award decisions or enforce requirements. Entities are not required to, nor are they able to, update their entity registration to remove these representations in SAM
Invoice Processing Platform (IPP).

Any sections below highlighted in yellow must be filled out by the proposer.

This page intentionally left blank.

PART I

The Schedule

SECTION A

Solicitation, Offer, and Award

(Standard Form 1442)

SOLICITATION, OFFER, AND AWARD (Construction, Alteration, or Repair)	1. SOLICITATION NO. 140R6026R0008	2. TYPE OF SOLICITATION ☐ SEALED BID (IFB) INVITATION FOR BID ☒ NEGOTIATED (RFP) REQUEST FOR PROPOSAL	3. DATE ISSUED 05/07/2026	PAGE 1 OF 3 PAGES

IMPORTANT - The "offer" section on the reverse must be fully completed by offeror.

4. CONTRACT NO.	5. REQUISITION/PURCHASE REQUEST NO. 0044038977	6. PROJECT NO.

7. ISSUED BY CODE R60

Bureau of Reclamation
Missouri Basin Regional Office
2021 4th Avenue North
Billings MT 59101

8. ADDRESS OFFER TO

Terra_warren@ios.doi.gov

9. FOR INFORMATION CALL	a. NAME Terra Warren	b. TELEPHONE NO. *(Include area code) (NO COLLECT CALLS)* 0000000000

SOLICITATION

NOTE: In sealed bid solicitations "offer" and "offeror" mean "bid and "bidder".

10. THE GOVERNMENT REQUIRES PERFORMANCE OF THE WORK DESCRIBED IN THESE DOCUMENTS *(Title, identifying number, date)*

Bureau of Reclamation Wyoming Area Office, Mills, Natrona county, Montana.
The North American Industry Classification System (NAICS) Code is: 238990, All Other Specialty Trad Contractors
The Product or Service Code (PSC) is: Z1NZ, Maintenance of Other Utilities.
This Request for Proposal (RFP) is issued as a Total Small Business Set-Aside.
Proposals are to be submitted via email to terra_warren@ios.doi.gov. Reclamation's email servers limit attachments to 25 MB per email. Therefore, the offeror may need to submit multiple emails to ensure the Government receives the complete proposal (Volumes 1-3).
The Offeror shall fill out the following:
Taxpayer Identification Number (TIN): _____
System for Award Management (SAM) Unique Entity Identification (UEI): _____
Commercial and Government Entity (CAGE) Code: _____

11. The contractor shall begin performance within 60 calendar days and complete it within 1000 calendar days after receiving ☐ award, ☒ notice to proceed. This performance period is ☐ mandatory ☒ negotiable. ***(See*** _____ ***).***

12a. THE CONTRACTOR MUST FURNISH ANY REQUIRED PERFORMANCE AND PAYMENT BONDS? *(If "YES", indicate within how many calendar days after award in Item 12b.)* ☒ YES ☐ NO	12b. CALENDAR DAYS 10

13. ADDITIONAL SOLICITATION REQUIREMENTS:

a. Sealed offers in original and 1 copies to perform the work required are due at the place specified in Item 8 by 2359 ***(hour)*** local time 06/24/2026 (date). If this is a sealed bid solicitation, offers will be publicly opened at that time. Sealed envelopes containing offers shall be marked to show the offeror's name and address, the solicitation number, and the date and time offers are due.

b. An offer guarantee ☒ is, ☐ is not required.

c. All offers are subject to the (1) work requirements, and (2) other provisions and clauses incorporated in the solicitation in full text or by reference.

d. Offers providing less than 120 calendar days for Government acceptance after the date offers are due will not be considered and will be rejected.

OFFER *(Must be fully completed by offeror)*

14. NAME AND ADDRESS OF OFFEROR *(Include ZIP Code)*

CODE FACILITY CODE

15. TELEPHONE NO. *(Include area code)*

16. REMITTANCE ADDRESS *(Include only if different than Item 14.)*

17. The offeror agrees to perform the work required at the prices specified below in strict accordance with the terms of this solicitation, if this offer is accepted by the Government in writing within _____ calendar days after the date offers are due. *(Insert any number equal to or greater than the minimum requirement stated in Item 13d. Failure to insert any number means the offeror accepts the minimum in Item 13d.)*

AMOUNTS

18. The offeror agrees to furnish any required performance and payment bonds.

19. ACKNOWLEDGMENT OF AMENDMENTS

(The offeror acknowledges receipt of amendments to the solicitation -- give number and date of each)

AMENDMENT NUMBER										
DATE.										

20a. NAME AND TITLE OF PERSON AUTHORIZED TO SIGN OFFER *(Type or print)*

20b. SIGNATURE

20c. OFFER DATE

AWARD *(To be completed by Government)*

21. ITEMS ACCEPTED:

Continued...

22. AMOUNT

23. ACCOUNTING AND APPROPRIATION DATA

24. SUBMIT INVOICES TO ADDRESS SHOWN IN *(4 copies unless otherwise specified)*

ITEM

25. OTHER THAN FULL AND OPEN COMPETITION PURSUANT TO THE UNITED STATES CODE AT

☐ 10 U.S.C. 3204(a) ( ) ☐ 41 U.S.C. 3304(a) ( )

26. ADMINISTERED BY R60

Bureau of Reclamation
Missouri Basin Regional Office
2021 4th Avenue North
Billings MT 59101

27. PAYMENT WILL BE MADE BY

CONTRACTING OFFICER WILL COMPLETE ITEM 28 OR 29 AS APPLICABLE

☐ 28. NEGOTIATED AGREEMENT *(Contractor is required to sign this document and return* 1 *copies to issuing office.)* Contractor agrees to furnish and deliver all items or perform all work requirements identified on this form and any continuation sheets for the consideration stated in this contract. The rights and obligations of the parties to this contract shall be governed by (a) this contract award, (b) the solicitation, and (c) the clauses, representations, certifications, and specifications incorporated by reference in or attached to this contract.

☐ 29. AWARD *(Contractor is not required to sign this document.)* Your offer on this solicitation is hereby accepted as to the items listed. This award consummates the contract, which consists of (a) the Government solicitation and your offer, and (b) this contract award. No further contractual document is necessary.

30a. NAME AND TITLE OF CONTRACTOR OR PERSON AUTHORIZED TO SIGN *(Type or print)*

31a. NAME OF CONTRACTING OFFICER *(Type or print)*

Terra Warren

30b. SIGNATURE

30c. DATE

31b. UNITED STATES OF AMERICA

BY

31c. DATE

NAME OF OFFEROR OR CONTRACTOR

ITEM NO. (A)	SUPPLIES/SERVICES (B)	QUANTITY (C)	UNIT (D)	UNIT PRICE (E)	AMOUNT (F)
	Period of Performance: 10/01/2026 to 06/30/2030				
00010	UPS & Breaker Replacement Product/Service Code: Z1NZ Product/Service Description: MAINTENANCE OF OTHER UTILITIES Requisition No: 0044038977	1	EA		

SECTION B

The Schedule

CONTINUATION OF

SECTION B – SUPPLIES OR SERVICES AND PRICES

Update UPS and Downstream Panels
Wyoming Area Office
Mills, Wyoming

B.1 PRICE SCHEDULES

(a) Offers will be considered for award on the following Price Schedule, but no offer will be considered for award on only a part of the Price Schedule.

(1) Offerors shall complete Price Schedules. Offers for less than the total of Schedules will be considered nonresponsive and will not be evaluated for award.

(2) Offers will be evaluated based on the total of Price Schedule.

(b) Offers are subject to the terms and conditions of this solicitation.

(c) See the contract clause at WBR 1452.232-81, Payment for Mobilization and Preparatory Work, for item 1.

(d) Price Schedule: See the following page. This price schedule will be added as part of the contract award document. The total funding will be applied to CLIN 0001 on the SF 1442, upon award.

(e)

PRICE SCHEDULE

Item	Section	Supplies or Services	Quantity and Unit	Unit Price	Amount
1	WBR 1452.232 -81	Mobilization and Preparatory Work	For the lump sum of		$
2	01 33 26	Electrical Drawings and Data	For the lump sum of		$
3	26 05 04	Demolition and Removal	For the lump sum of		$
4	26 05 10	Conductors and Cables	For the lump sum of		$
5	26 05 33	Raceways and Boxes	For the lump sum of		$
7	26 20 10	Temporary Power Equipment	For the lump sum of		$
8	26 21 14	Safety Disconnect Switch	For the lump sum of		$
9	26 24 24	Distribution Panelboards	For the lump sum of		$
10	26 28 30	Enclosed Circuit Breakers	For the lump sum of		$
11	26 30 10	Automatic Transfer Switch	For the lump sum of		$
12	26 33 53	Static Uninterruptible Power Supply	For the lump sum of		$

TOTAL FOR PRICE SCHEDULE $_____

END OF SUPPLIES OR SERVICES AND PRICES

C - Description/Specifications/Statement of Work

The contractor shall perform and deliver the supplies and services hereunder in accordance with the specifications, drawings, and other attachments listed in Section J – List of Attachments.

D - Packaging and Marking

There are no clauses included in this section.

Section E – Inspection and Acceptance

E.1 52.246-12 Inspection of Construction (Aug 1996)

(a) *Definition.* "Work" includes, but is not limited to, materials, workmanship, and manufacture and fabrication of components.

(b) The Contractor shall maintain an adequate inspection system and perform such inspections as will ensure that the work performed under the contract conforms to contract requirements. The Contractor shall maintain complete inspection records and make them available to the Government. All work shall be conducted under the general direction of the Contracting Officer and is subject to Government inspection and test at all places and at all reasonable times before acceptance to ensure strict compliance with the terms of the contract.

(c) Government inspections and tests are for the sole benefit of the Government and do not-

(1) Relieve the Contractor of responsibility for providing adequate quality control measures;

(2) Relieve the Contractor of responsibility for damage to or loss of the material before acceptance;

(3) Constitute or imply acceptance; or

(4) Affect the continuing rights of the Government after acceptance of the completed work under paragraph (i) of this- section.

(d) The presence or absence of a Government inspector does not relieve the Contractor from any contract requirement, nor is the inspector authorized to change any term or condition of the specification without the Contracting Officer's written authorization.

(e) The Contractor shall promptly furnish, at no increase in contract price, all facilities, labor, and material reasonably needed for performing such safe and convenient inspections and tests as may be required by the Contracting Officer. The Government may charge to the Contractor any additional cost of inspection or test when work is not ready at the time specified by the Contractor for inspection or test, or when prior rejection makes reinspection or retest necessary. The Government shall perform all inspections and tests in a manner that will not unnecessarily delay the work. Special, full size, and performance tests shall be performed as described in the contract.

(f) The Contractor shall, without charge, replace or correct work found by the Government not to conform to contract requirements, unless in the public interest the Government consents to accept the work with an appropriate adjustment in contract price. The Contractor shall promptly segregate and remove rejected material from the premises.

(g) If the Contractor does not promptly replace or correct rejected work, the Government may-

(1) By contract or otherwise, replace or correct the work and charge the cost to the Contractor; or

(2) Terminate for default the Contractor's right to proceed.

(h) If, before acceptance of the entire work, the Government decides to examine already completed work by removing it or tearing it out, the Contractor, on request, shall promptly furnish all necessary facilities, labor, and material. If the work is found to be defective or nonconforming in any material respect due to the fault of the Contractor or its subcontractors, the Contractor shall defray the expenses of the examination and of satisfactory reconstruction. However, if the work is found to meet contract requirements, the Contracting Officer shall make an equitable adjustment for the additional services involved in the examination and reconstruction, including, if completion of the work was thereby delayed, an extension of time.

(i) Unless otherwise specified in the contract, the Government shall accept, as promptly as practicable after completion and inspection, all work required by the contract or that portion of the work the Contracting Officer determines can be accepted separately. Acceptance shall be final and conclusive except for latent defects, fraud, gross mistakes amounting to fraud, or the Government's rights under any warranty or guarantee.

E.2 52.246-13 Inspection-Dismantling, Demolition, or Removal of Improvements (Aug 1996)

(a) Unless otherwise designated by the specifications, all workmanship performed under the contract is subject to Government inspection at all times and places where dismantling or demolition work is being performed. The Contractor shall furnish promptly, and at no increase in contract price, all reasonable facilities, labor, and materials necessary for safe and convenient inspection by the Government. The Government shall perform inspections in a manner that will not unduly delay the work.

(b) The Contractor is responsible for damage to property caused by defective workmanship. The Contractor shall promptly segregate and remove from the premises any unsatisfactory facilities, materials, and equipment used in contract performance, and promptly replace them with satisfactory items. If the Contractor fails to proceed at once in a workmanlike manner with performance of the work or with the correction of defective workmanship, the Government may-

(1) By contract or otherwise, replace the facilities, materials, and equipment or correct the workmanship and charge the cost to the Contractor; and

(2) Terminate for default the Contractor's right to proceed. The Contractor and any surety shall be liable, to the extent specified in the contract for any damage or cost of repair or replacement.

Section F – Deliveries or Performance

F.1 52.252-2 Clauses Incorporated by Reference (Feb 1998)

This contract incorporates one or more clauses by reference, with the same force and effect as if they were given in full text. Upon request, the Contracting Officer will make their full text available. Also, the full text of a clause may be accessed electronically at the following address: www.acquisition.gov

52.236-15	Schedules for Construction Contracts (Deviation)	Jan 2026
52.242-14	Suspension of Work	Apr 1984

G – Contract Administration Section Data

G.1 1452.201-70 Authorities and delegations (Deviation) (Jul 2025)

(a) The Contracting Officer is the only individual authorized to enter into or terminate this contract, modify any term or condition of this contract, waive any requirement of this contract, or accept nonconforming work.

(b) The Contracting Officer will designate a Contracting Officer's Representative (COR) at time of award. The COR will be responsible for technical monitoring of the contractor's performance and deliveries. The COR will be appointed in writing, and a copy of the appointment will be furnished to the Contractor. Changes to this delegation will be made by written changes to the existing appointment or by issuance of a new appointment.

(c) The COR is not authorized to perform, formally or informally, any of the following actions:

(1) Promise, award, agree to award, or execute any contract, contract modification, or notice of intent that changes or may change this contract;

(2) Waive or agree to modification of the delivery schedule;

(3) Make any final decision on any contract matter subject to the Disputes Clause;

(4) Terminate, for any reason, the Contractor's right to proceed;

(5) Obligate in any way, the payment of money by the Government.

(d) The Contractor shall comply with the written or oral direction of the Contracting Officer or authorized representative(s) acting within the scope and authority of the appointment memorandum. The Contractor need not proceed with direction that it considers to have been issued without proper authority. The Contractor shall notify the Contracting Officer in writing, with as much detail as possible, when the COR has taken an action or has issued direction (written or oral) that the Contractor considers to exceed the COR's appointment, within 3 days of the occurrence. Unless otherwise provided in this contract, the Contractor assumes all costs, risks, liabilities, and consequences of performing any work it is directed to perform that falls within any of the categories defined in paragraph (c) prior to receipt of the Contracting Officer's response issued under paragraph (e) of this clause.

(e) The Contracting Officer shall respond in writing within 30 days to any notice made under paragraph (d) of this clause. A failure of the parties to agree upon the nature of a direction, or upon the contract action to be taken with respect thereto, shall be subject to the provisions of the Disputes clause of this contract.

(f) The Contractor shall provide copies of all correspondence to the Contracting Officer and the COR.

(g) Any action(s) taken by the Contractor, in response to any direction given by any person acting on behalf of the Government or any Government official other than the Contracting Officer or the COR acting within his or her appointment, shall be at the Contractor's risk.

G.2 WBR 1452.201-80 Contracting Officer's Representative's Authorities and Limitations (Jul 2025)

a) Performance of the work under this contract shall be subject to the technical direction of the Reclamation Contracting Officer's Representative (COR). The term "technical direction" is defined to include, without limitation:

(1) Inspecting and accepting or rejecting work performed under the contract.
(2) Representing the Government in technical phases of the work. The COR is responsible for the technical administration of the contract and will provide instructions and interpretations to the Contractor on all technical matters relating to the contract. The COR will supervise or oversee all Government technical and administrative personnel assigned to assist the COR.
(3) Reviewing and, where required by the contract, approving submittals of technical data, shop drawings, samples, literature, plans, or other data required to be delivered by the Contractor to the Government.

(b) The Contractor will receive a copy of the written COR designation from the Contracting Officer. It will specify the extent of the COR's authority to act on behalf of the Contracting Officer.

(c) Technical direction must be within the scope of work stated in the contract. Only the Contracting Officer is authorized to determine if a change is within the scope of the contract; therefore, the COR does not have the authority to, and may not, issue any technical direction that

(1) Constitutes a direction of additional work outside the Contract requirements;
(2) Constitutes a change as defined in the contract clause entitled "Changes;"
(3) In any manner causes an increase or decrease in the total contract cost, or the time required for contract performance;
(4) Changes any of the expressed terms, conditions or specifications of the contract; or
(5) Interferes with the Contractor's right to perform the terms and conditions of the contract.

(d) All technical direction shall be issued in writing by the COR.

(e) The Contractor must proceed promptly with the performance of technical direction duly issued by the COR in the manner prescribed by this clause and within its authority under the provisions of this clause. If, in the opinion of the Contractor, any instruction or direction by the COR falls within one of the categories defined in (c)(1) through (c)(5) of this clause, the Contractor must not proceed and must notify the Contracting Officer in writing within five (5) working days after receipt of any such instruction or direction and must request the Contracting Officer to modify the contract accordingly. Upon receiving the notification from the Contractor, the Contracting Officer must -

(1) Advise the Contractor in writing after receipt of the Contractor's letter that the technical direction is within the scope of the contract effort and does not constitute a change under the Changes clause of the contract; or
(2) Advise the Contractor that the Government will issue a written change order.

(f) A failure of the Contractor and Contracting Officer either to agree that the technical direction is within the scope of the contract or to agree upon the contract action to be taken with respect to the technical direction will be subject to the provisions of the clause entitled "Disputes."

G.3 DOI-AAAP-0028 Electronic Invoicing and Payment Requirements - Invoice Processing Platform (IPP) (Feb 2021)

Payment requests must be submitted electronically through the U. S. Department of the Treasury's Invoice Processing Platform System (IPP).

"Payment request" means any request for contract financing payment or invoice payment by the Contractor. To constitute a proper invoice, the payment request must comply with the requirements identified in the applicable Prompt Payment clause included in the contract, or the clause 52.212-4 Contract Terms and Conditions - Commercial Items included in commercial item contracts. The IPP website address is: https://www.ipp.gov.

Under this contract, the following documents are required to be submitted as an attachment to the IPP invoice

- Construction Invoice (MB Form)
- Monthly Certificate of Labor Conformance (MB Form)
- Subcontractor / Supplier Payment Summary (MB Form)
- Final Payment Only - Release of Claims (DI 137)

The Contractor must use the IPP website to register access and use IPP for submitting requests for payment. The Contractor Government Business Point of Contact (as listed in SAM) will receive enrollment instructions via email from the Federal Reserve Bank of St. Louis (FRBSTL) within 3 - 5 business days of the contract award date. Contractor assistance with enrollment can be obtained by contacting the IPP Production Helpdesk via email IPPCustomerSupport@fiscal.treasury.gov or phone (866) 973-3131.

If the Contractor is unable to comply with the requirement to use IPP for submitting invoices for payment, the Contractor must submit a waiver request in writing to the Contracting Officer with its proposal or quotation.

Note – Contractor is encouraged to submit their proposed invoice documents to the COR and CO. Once this has been reviewed and approved by the COR, the CO/CS will send a validation of the invoice to the contractor for submission/uploading to IPP.

G.4 DOI-AAAP 0050 V3 NOTICE TO CONTRACTORS - CONTRACTOR PERFORMANCE ASSESSMENT REPORTING SYSTEM (DEC 2015)

1) FAR 42.1502 directs all Federal agencies to collect past performance information on contracts. The Department of the Interior (DOI) has implemented the Contractor Performance Assessment Reporting System (CPARS) to comply with this regulation. One or more past performance evaluations will be conducted in order to record your contract performance as required by FAR 42.15.
2) The past performance evaluation process is a totally paperless process using CPARS. CPARS is a web-based system that allows for electronic processing of the performance evaluation report. Once the report is processed, it is available in CPARS for Government use in evaluating past performance as part of a source selection action.

3) We request that you furnish the Contracting Officer (CO) with the name, position title, phone number, and email address for each person designated to have access to your firm's past performance evaluation(s) for the contract no later than **30 days after award.** Each person granted access will have the ability to provide comments in the Contractor portion of the report and state whether or not the Contractor agrees with the evaluation, before returning the report to the Assessing Official (AO). Information in the report must be protected as source selection sensitive information not releasable to the public.
4) When your Contractor Representative(s) are registered in CPARS, they will receive an automatically generated email with detailed login instructions. Further details, systems requirements, and training information for CPARS is available at https://www.cpars.gov/.
5) Within 60 days after the end of a performance period, the AO will complete an interim or final past performance evaluation, and the report will be accessible at https://www.cpars.gov/.
    a) Contractor Representatives may then provide comments in response to the evaluation, or return the evaluation without comment.
    b) Your comments should focus on objective facts in the AO's narrative and should provide your views on the causes and ramifications of the assessed performance.
    c) All information provided should be reviewed for accuracy prior to submission.
    d) If you elect not to provide comments, please acknowledge receipt of the evaluation by indicating "No comment" in the space provided, and then selecting “Accept the Ratings and Close the Evaluation”.
    e) Your response is due within 60 calendar days after receipt of the CPAR. On day 15, the evaluation will become available in CPARS marked as “Pending” with or without comments and whether or not it has been closed.
    f) If you do not sign and submit the CPAR within 60 days, it will automatically be returned to the Government and will be annotated: "The report was delivered/received by the contractor on (date). The contractor neither signed nor offered comment in response to this assessment."
6) The following guidelines apply concerning your use of the past performance evaluation:
    a) Protect the evaluation as source selection information. After review, transmit the evaluation by completing and submitting the form through CPARS. If for some reason you are unable to view and/or submit the form through CPARS, contact the CO for instructions.
    b) Strictly control access to the evaluation within your organization. Ensure the evaluation is never released to persons or entities outside of your control.
    c) Prohibit the use of or reference to evaluation data for advertising, promotional material, pre-award surveys, responsibility determinations, production readiness reviews, or other similar purposes.
7) If you wish to discuss a past performance evaluation, you should request a meeting in writing to the CO no later than seven days following your receipt of the evaluation. The meeting will be held in person or via telephone or other means during your 60-day review period.
8) A copy of the completed past performance evaluation will be available in CPARS for your viewing and for Government use supporting source selection actions after it has been finalized.

Section H – Special Contract Requirements

H.1 Schedule of Values

(a) Definitions. "Schedule of Values" means the clearly definable tasks, and the cost associated with each of those tasks, which comprise the total work effort required to complete a lump sum contract line item. Except for the Mobilization and Preparatory Work line item, the Contractor shall submit a Schedule of Values for review and acceptance for all lump-sum Contract Line Item Numbers listed in Section B. The Schedule of Values will be used to assess the intermediate value of work completed for the purpose of making progress payments.

PART II

Contract Clauses

SECTION I

Contract Clauses

Section I – Contract Clauses

I.1 52.252-2 Clauses Incorporated by Reference (Feb 1998)

This contract incorporates one or more clauses by reference, with the same force and effect as if they were given in full text. Upon request, the Contracting Officer will make their full text available. Also, the full text of a clause may be accessed electronically at the following address: www.acquisition.gov

52.202-1	Definitions	Jun 2020
52.203-3	Gratuities Use	Apr 1984
52.203-5	Covenant Against Contingent Fees	May 2014
52.203-6	Restrictions on Subcontractor Sales to the Government	Jun 2020
52.203-6 Alt 1	Restrictions on Subcontractor Sales to the Government (Alternate 1)	Nov 2021
52.203-7	Anti-Kickback Procedures	Jun 2020
52.203-8	Cancellation, Rescission, and Recovery of Funds for Illegal or Improper Activity	May 2014
52.203-10	Price or Fee Adjustment for Illegal or Improper Activity	May 2014
52.203-12	Limitation on Payments to Influence Certain Federal Transaction	Jun 2020
52.203-16	Preventing Personal Conflicts of Interest.	Jun 2020
52.203-17	Contractor Employee Whistleblower Rights and Requirement To Inform Employees of Whistleblower Rights	Nov 2023
52.203-19	Prohibition on Requiring Certain Internal Confidentiality Agreements or Statements	Jan 2017
52.204-9	Personal Identity Verification of Contractor Personnel	
52.204-10	Reporting Executive Compensation and First-Tier Subcontract Awards. (Deviation)	Apr 2026
52.204-13	System for Award Management Maintenance. (Deviation)	Apr 2026
52.204-14	Service Contract Reporting Requirements. (Deviation)	Apr 2026
52.204-19	Incorporation by Reference of Representations and Certifications (Deviation)	Apr 2026
52.209-6	Protecting the Government's Interest When Subcontracting With Contractors Debarred, Suspended, Proposed for Debarment, or Voluntarily Excluded.	Jan 2025
52.209-9	Updates of Publicly Available Information Regarding Responsibility Matters.	Oct 2018
52.209-10	Prohibition on Contracting with Inverted Domestic Corporations.	Nov 2015
52.210-1	Market Research (Deviation)	Jul 2025
52.215-2	Audit and Records – Negotiation.	Jun 2020
52.215-8	Order of Precedence-Uniform Contract Format	Oct 1997
52.219-6	Notice of Total Small Business Set-aside. (Deviation)	Jan 2026

52.219-8	Utilization of Small Business Concerns (Deviation)	Jan 2026
52.219-14	Limitations on Subcontracting (Deviation)	Jan 2026
52.219-28	Postward Small Business Program Rerepresentation. (Deviation)	Jan 2026
52.222-1	Notice to the Government of Labor Disputes	Feb 1997
52.222-3	Convict Labor	Jun 2003
52.222-4	Contract Work Hours and Safety Standards	May 2018
52.222-6	Construction Wage Rate Requirements	Aug 2018
52.222-7	Withholding of Funds	May 2014
52.222-8	Payrolls and Basic Records	Jul 2021
52.222-9	Apprentices and Trainees	Jul 2005
52.222-10	Compliance with Copeland Act Requirements	Feb 1988
52.222-11	Subcontracts (Labor Standards)	May 2014
52.222-12	Contract Termination-Debarment	May 2014
52.222-13	Compliance with Construction Wage Rate Requirements and Related Regulations	May 2014
52.222-14	Disputes Concerning Labor Standards	Feb 1988
52.222-15	Certification of Eligibility	May 2014
52.222-27	Affirmative Action Compliance Requirements for Construction	Apr 2015
52.222-35	Equal Opportunity for Veterans	Jun 2020
52.222-36	Equal Opportunity for Workers with Disabilities	Jun 2020
52.222-37	Employment Reports on Veterans	Jun 2020
52.222-40	Notification of Employee Rights Under the National Labor Relations Act	Dec 2010
52.222-50	Combating Trafficking in Persons	Oct 2025
52.222-54	Employment Eligibility Verification	Jan 2025
52.222-55	Minimum Wages for Contractor Workers Under Executive Order 14026	Jan 2022
52.222-62	Paid Sick Leave Under Executive Order 13706	Jan 2022
52.222-90	Addressing DEI Discrimination by Federal Contractors	Apr 2026
52.223-5	Pollution Prevention and Right-to-Know Information	May 2024
52.223-3	Hazardous Material Identification and Material Safety Data.	Feb 2021
52.223-10	Waste Reduction Program	May 2024
52.223-23	Sustainable Products and Services	May 2024
52.225-9	Buy American-Construction Materials.	Oct 2022
52.225-13	Restrictions on Certain Foreign Purchases	Feb 2021
52.225-14	Inconsistency between English Version and Translation of Contract	Feb 2000
52.226-7	Drug-Free Workplace (Deviation)	Apr 2026
52.226-8	Encouraging Contractor Policies to Ban Text Messaging While Driving (Deviation)	Apr 2026
52.227-1	Authorization and Consent	Jun 2020
52.227-2	Notice and Assistance Regarding Patent and Copyright Infringement	Jun 2020
52.227-4	Patent Indemnity-Construction	Dec 2007
52.228-2	Additional Bond Security	Oct 1997
52.228-5	Insurance-Work on a Government Installation	Jan 1997

52.228-11	Individual Surety Pledge of Assets	Feb 2021
52.228-12	Prospective Subcontractor Requests for Bonds	Dec 2022
52.228-14	Irrevocable Letter of Credit	Nov 2014
52.228-15	Performance and Payment Bonds-Construction	Jun 2020
52.229-3	Federal, State, and Local Taxes (Deviation)	Oct 2025
52.232-5	Payments under Fixed-Price Construction Contracts.	May 2014
52.232-17	Interest	May 2014
52.232-18	Availability of Funds	Apr 1984
52.232-23	Assignment of Claims	May 2024
52.232-27	Prompt Payment for Construction Contracts	Jan 2017
52.232-33	Payment by Electronic Funds Transfer-System for Award Management	Oct 2018
52.232-39	Unenforceability of Unauthorized Obligations	Jun 2013
52.232-40	Providing Accelerated Payments to Small Business Subcontractors	Mar 2023
52.233-1	Disputes	May 2014
52.233-1 Alt 1	Disputes Alternate 1	Dec 1991
52.233-3	Protest after Award	Aug 1996
52.233-4	Applicable Law for Breach of Contract Claim	Oct 2004
52.236-2	Differing Site Conditions. (Deviation)	Jan 2026
52.236-3	Site Investigation and Conditions Affecting the Work (Deviation)	Jan 2026
52.236-5	Material and Workmanship (Deviation)	Jan 2026
52.236-6	Superintendence by the Contractor (Deviation)	Jan 2026
52.236-7	Permits and Responsibilities (Deviation)	Jan 2026
52.236-8	Other Contracts (Deviation)	Jan 2026
52.236-9	Protection of Existing Vegetation, Structures, Equipment, Utilities, and Improvements (Deviation)	Jan 2026
52.236-10	Operations and storage areas(Deviation)	Jan 2026
52.236-11	Use and Possession Prior to Completion (Deviation)	Jan 2026
52.236-12	Cleaning Up (Deviation)	Jan 2026
52.236-13	Accident Prevention. (Deviation)	Jan 2026
52.236-14	Availability and Use of Utility Services. (Deviation)	Jan 2026
52.236-17	Layout of Work. (Deviation)	Jan 2026
52.236-21	Specifications and Drawings for Construction(Deviation)	Jan 2026
52.236-21 Alt 1	Specifications and Drawings for Construction – Alternate 1(Deviation)	Jan 2026
52.204-91	Security Prohibitions and Exclusions.	Mar 2026
52.242-13	Bankruptcy	Jul 1995
52.243-4	Changes (Deviation)	Oct 2025
52.243-6	Change Order Accounting (Deviation)	Oct 2025
52.244-2	Subcontracts	Jun 2020
52.244-6	Subcontracts for Commercial Products and Commercial Services	Oct 2025
52.246-21	Warranty of Construction	Mar 1994
52.246-26	Reporting Nonconforming Items.	Aug 2024
52.248-3	Value Engineering-Construction	Oct 2025
52.249-2	Termination for Convenience of the Government (Fixed Price) -	Apr 2012

Alt I	Alternate I	
52.249-10	Default (Fixed-Price Construction)	Apr 1984
52.249-10 Alt I	Default (Fixed-Price Construction) Alt 1	Apr 1984
52.249-14	Excusable Delays	Apr 1984
52.253-1	Computer Generated Forms	Jan 1991

I.2 52.236-2 Differing Site Conditions (Deviation) (Jan 2026)

(a) The Contractor shall promptly, and before the conditions are disturbed, give a written notice to the Contracting Officer of

(1) Latent physical conditions or subsurface conditions at the site which differ materially from those indicated in this contract; or

(2) Unknown physical conditions at the site, of an unusual nature, which differ materially from those ordinarily encountered and generally recognized as inherent in work of the character provided for in the contract.

(b)(1) The Contracting Officer will investigate the site conditions promptly after receiving such a notice.

(2) If the conditions materially so differ and cause an increase or decrease in the Contractor's cost of, or the time required for, performing any part of the work under this contract an equitable adjustment must be made under this clause.

(c) No request for an equitable adjustment to the contract under this clause will be allowed, unless the Contractor has given the written notice required.

(d) No request for an equitable adjustment to the contract for differing site conditions will be allowed if made after final payment under this contract.

I.3 52.236-3 Site Investigation and Conditions Affecting the Work (Deviation) (Jan 2026)

(a) The Contractor acknowledges that it has taken steps reasonably necessary to ascertain the nature and location of the work, and that it has investigated and satisfied itself as to the general and local conditions which can affect the work or its cost, including—

(1) Conditions bearing upon transportation, disposal, handling, and storage of materials;

(2) The availability of labor, water, electric power, and roads;

(3) Uncertainties of weather, river stages, tides, or similar physical conditions at the site;

(4) The conformation and conditions of the ground; and

(5) The character of equipment and facilities needed preliminary to and during work performance.

(b) The Contractor also acknowledges that it has satisfied itself as to the character, quality, and quantity of surface and subsurface materials or obstacles to be encountered insofar as this information is reasonably ascertainable from an inspection of the site, including all exploratory work done by the Government, as well as from the drawings and specifications made a part of this contract. Any failure of the Contractor to take the actions described and acknowledged in this paragraph will not relieve the Contractor from responsibility for estimating properly the difficulty and cost of successfully performing the work, or for proceeding to successfully perform the work without additional expense to the Government.

(c) The Government assumes no responsibility for any conclusions or interpretations made by the Contractor based on the information made available by the Government. Nor does the Government assume responsibility for any understanding reached or representation made concerning conditions which can affect the work by any of its officers or agents before the execution of this contract, unless that understanding or representation is expressly stated in this contract.

I.4 52.252-6 Authorized Deviations in Clauses (Nov 2020)

(a) The use in this solicitation or contract of any Federal Acquisition Regulation (48 CFR Chapter 1) clause with an authorized deviation is indicated by the addition of "(DEVIATION)" after the date of the clause.

(b) The use in this solicitation or contract of any (48 CFR chapter 14) clause with an authorized deviation is indicated by the addition of "(DEVIATION)" after the name of the regulation.

I.5 1452.203-70 Restrictions on Endorsements – Department of the Interior(Jul 1996)

The Contractor shall not refer to contracts awarded by the Department of the Interior in commercial advertising, as defined in FAR 31.205-1, in a manner which states or implies that the product or service provided is approved or endorsed by the Government or is considered by the Government to be superior to other products or services. This restriction is intended to avoid the appearance of preference by the Government toward any product or service. The Contractor may request the Contracting Officer to make a determination as to the propriety of promotional material.

I.6 1452.204-70 Release of Claims – Department of the Interior (Jul 1996)

After completion of work and prior to final payment, the Contractor shall furnish the Contracting Officer with a release of claims against the United States relating to this contract. The Release of Claims form (DI-137) shall be used for this purpose. The form provides for exception of specified claims from operation of the release.

I.7 1452.215-70 Examination of Records by the Department of the Interior (Apr 1984)

For purposes of the Examination of Records by the Comptroller General clause of this contract (FAR 52.215-1), the Secretary of the Interior, the Inspector General, and their duly authorized representative(s) from the Department of the Interior shall have the same access and examination rights as the Comptroller General of the United States.

I.8 1452.228-70 Liability Insurance - Department of the Interior (Jul 1996)

The Contractor shall procure and maintain during the term of this contract and any extension thereof liability insurance in form satisfactory to the Contracting Officer by an insurance company which is acceptable to the Contracting Officer. The named insured parties under the policy shall be the Contractor and the United States of America. The amounts of the insurance

shall be not less than as follows:

WORKERS' COMPENSATION AND EMPLOYER'S LIABILITY
$100,000 minimum coverage
GENERAL LIABILITY
$500,000 per occurrence
AUTOMOBILE LIABILITY
$200,000 each person
$500,000 each occurrence
$ 20,000 property damage (b) Each policy shall have a certificate evidencing the insurance coverage. The insurance company shall provide an endorsement to notify the Contracting Officer 30 days prior to the effective date of cancellation or termination of the policy or certificate; or modification of the policy or certificate which may adversely affect the interest of the Government in such insurance. The certificate shall identify the contract number, the name and address of the Contracting Officer, as well as the insured, the policy number and a brief description of contract services to be performed. The contractor shall furnish the Contracting Officer with a copy of an acceptable insurance certificate prior to beginning the work.

I.9 WBR 1452.209-82 Prohibition on Release of Information- Bureau of Reclamation (Mar 2022)

(a) The Contractor shall not disclose information pertaining to the services performed under this contract to anyone other than Government or other personnel authorized by the Contracting Officer. The Contractor agrees that it will protect any information obtained from other companies during the performance of this contract from unauthorized use or disclosure for as long as the information remains proprietary and shall refrain from using such information for any purpose other than that for which it was furnished.
(b) In the event that the Contractor intends to employ individuals other than its own staff or other firms in the performance of the contract, each individual or firm shall be required to furnish the same written certification.
(c) The contractor shall insert, in any subcontract that requires the performance of work similar to that being performed by the Contractor, terms that shall conform substantially to the language of this clause, including this paragraph (c).

The contractor agrees to notify the contracting officer, simultaneous with its notification to SBA (as required by SBA's 8(a) regulations), when the owner or owners upon whom 8(a) eligibility is based plan to relinquish ownership or control of the concern. Consistent with 15 U.S.C. 637(a)(21), transfer of ownership or control shall result in termination of the contract for convenience, unless SBA waives the requirement for termination prior to the actual relinquishing of ownership and control.

I.10 WBR 1452.223-81 Safety and Health – Bureau of Reclamation (Oct 2022)

(a) The Contractor shall not require any person employed in the performance of this contract (including subcontracts) to work under conditions which are unsanitary, hazardous, or dangerous to an employee's health or safety.

(b) Contractor shall comply with the most current version of the Bureau of Reclamation's

Reclamation Safety and Health Standards (RSHS) and, if incorporated, 52.236-13 Accident Prevention.

The RSHS manual shall be obtained at:
http://www.usbr.gov/safety/rshs/index.html

(c) Comply with the standards (29 CFR) issued by the Occupational Safety and Health Administration (OSHA), U.S. Department of Labor, www.osha.gov.

(d) In the event there is a conflict between the requirements contained in paragraphs (b) and (c) referenced herein, or in the Statement of Work (SOW) or Performance Work Statement (PWS), the more stringent requirement shall prevail.

(e) If required in the SOW or PWS, the Contractor shall submit a written proposed safety program as prescribed in the RSHS and the written specifications.

(f) The Contractor shall maintain an accurate record of and shall report to the Contracting Officer (or authorized representative) in the manner prescribed by the Contracting Officer, all cases of death, occupational diseases, or traumatic injury to employees or the public involved, and property damage in accordance with the RSHS and OSHA guidelines.

(g) If the contractor deems that an updated version of the RSHS constitutes a substantive change to the contract, affecting price or time (or both), the contractor may request a contract modification in accordance with the terms of the contract.

I.11 WBR 1452.232-81 Payment for Mobilization and Preparatory Work of Bureau of Reclamation (Mar 2022)

(a) General. Payment for the Mobilization and Preparatory Work line item of the schedule will be made as reflected herein. To the extent that this line item exceeds the percentage of total contract pricing as estimated by the Contracting Officer in WBR 1452.236-85, Instruction for Mobilization and Preparatory Work Schedule Line Item, payment will be made as reflected in Section (d)(5) below. Reclamation will make payment to the Contractor in accordance with this clause for operations including, but not limited to, those necessary for --

(1) Movement of personnel, equipment, supplies, and incidentals to the project site;
(2) The establishment of offices, buildings, plants and other facilities, at the site (excludes temporary buildings (e.g. storage sheds, shops, offices) and utilities listed in the Operations and Storage Areas clause of this contract;
(3) Payment of premiums for project bonds and insurance; and
(4) Other work and operations which must be performed or costs incurred incident to the initiation of meaningful work at the site and for which the contract does not otherwise provide for payment.

(b) Facilities and equipment covered by mobilization work.

(1) All facilities, plant, and equipment which are established at, or brought to, the site shall be
deemed to be subject to the provisions of this paragraph unless the Contracting Officer specifically provides other written authorization for a particular item or items.
(2) The Contractor shall be solely responsible for the adequacy, efficiency, use,

protection, maintenance, repair, and preservation of all facilities, plant, and equipment on site.

(3) The facilities, plant, and equipment covered by this paragraph shall not be dismantled or removed from the site prior to completion of the work under the contract without the written authorization of the Contracting Officer.

(c) Termination for default. Should the Contractor be terminated for default as provided by the Default clause of this contract --

(1) All facilities, plant, and equipment on the site shall be subject to the Government's right to take possession of and utilize such items for the purpose of completing the work;

(2) The Contractor shall provide evidence of encumbrances, liens, or other security interests, to the Contracting Officer; and

(3) Any encumbrance, lien, or other security interest on such facilities, plant, or equipment shall be subordinated to the Government's rights under the Default clause of this contract to utilize all facilities, plant, and equipment to complete the work under the contract.

(d) Payment. Payment for mobilization and preparatory work under paragraph (a) of this clause shall be made at the contractor lump-sum price for this item as contained in the Schedule. Progress payments for mobilization and preparatory work shall be made as follows --

(1) In accordance with paragraph (g) of the Payments under Fixed Price Construction Contracts clause of this contract and upon submission of a proper invoice, the Government will reimburse the Contractor for the total amount of premiums paid for performance and payment bonds as required by the Performance and Payment Bond Requirements clause of this contract and for any insurance which is specified as payable by the Government under this contract.

(2) Except as provided in (d)(1) above, progress payments for mobilization and preparatory work shall not be considered a separate division of work for the purposes of progress payments and shall be subject to retainage before payment of the total amount for this contract line item.

(3) When progress payments totaling 5 percent of the total original contract amount have been made by the Government for all other work accomplished under the contract, the Government shall pay the Contractor 50 percent of the mobilization and preparatory work contract line item amount or **2.5** percent of the total original contract amount (whichever is the lower) exclusive of any payment already made to the Contractor for performance and payment bond premiums and specified insurance under subparagraph (d).

(4) When progress payments totaling 10 percent of the total original contract amount have been made by the Government for all other work accomplished under the contract, the balance of the amount for the mobilization and preparatory work contract line item or **100** percent of the total original contract amount (whichever is the lower) shall be paid to the contractor.

(5) If the contract amount for mobilization and preparatory work exceeds the total of the payments allowed under (3) and (4) above, the balance shall be paid when the contract work is substantially complete as determined by the Contracting Officer.

I.12 WBR 1452.236-84 Preservation of Cultural Resources (Mar 2022)

Definitions.

"Cultural items" as defined by Native American Graves Protection and Repatriation Act

(NAGPRA) include Native American human remains, funerary objects, sacred objects, and objects of cultural patrimony.
"Cultural resources" is a broad term that includes prehistoric, historic, architectural, and traditional cultural properties; specific items include, but are not limited to, human skeletal remains, archaeological artifacts, records, and material remains related to such properties.
"Funerary objects" means Native American items that, as part of the death rite or ceremony of a culture, are reasonably believed to have been placed intentionally at the time of death or later with or near individual human remains.
"Human remains" means the physical remains of the body of a person.
"Native American" means of, or relating to, a tribe, people, or culture that is indigenous to the United States.
"Sacred objects" means Native American items that are specific ceremonial objects needed by traditional Native American religious leaders for the practice of traditional Native American religions by their present-day adherents. These items are specifically limited to objects that were devoted to a traditional Native American religious ceremony or ritual and which have religious significance or function in the continued observance or renewal of such ceremony.
"Objects of cultural patrimony" means Native American items having ongoing historical, traditional, or cultural importance central to the Native American tribe or Native Hawaiian organization itself, rather than property owned by an individual tribal or organization member. These objects are of such central importance that they may not be alienated, appropriated, or conveyed by any individual tribal or organization member.

General. Federal legislation provides for the protection and preservation of cultural resources that may be impacted or altered as a result of any Federal project, activity, or program or federally licensed or assisted project, activity, or program.

Discovery of Resources. Should the Contractor, or any of the Contractor's employees, subcontractors, or parties operating or associated with the Contractor, in the performance of this contract discover evidence of possible cultural resources, the Contractor shall immediately cease work at that location and provide oral notification to the contracting officer, giving location and nature of the findings. The Contractor shall forward a written report of findings to the Contracting Officer within 48 hours.

If a cultural resource is determined by Reclamation to be a Native American cultural item, then the Contractor shall cease the activity in the area of the discovery, make a reasonable effort to protect the items discovered, and wait for written approval from the Contracting Officer before resuming activity.

If the discovery occurs on tribal lands, the Contractor shall immediately orally notify the responsible tribal official and the Contracting Officer and follow with written confirmation within 48 hours to the responsible tribal official and the contracting officer. (The contracting officer will supply the name and phone number of the tribal official.

The Contractor shall exercise care so as not to disturb or damage any cultural resources discovered during the execution of this contract and shall provide such cooperation and assistance as may be necessary to preserve the findings for removal or other disposition by

Reclamation. The Contractor shall not resume work in the area of a discovery until written notice to proceed is received from the contracting officer.

Approval of Use Areas and Borrow Sources. If the Contractor proposes to use a location other than an approved location (approved locations to be provided by the contracting officer), the location(s) must first be approved for use by the contracting officer. When considering an unapproved use area or borrow source, the Contractor shall submit a map showing the location to the contracting officer at least 45 calendar days in advance of any proposed use. The Contractor or his subcontractors shall take no action to use or alter the proposed location until written approval is provided by the contracting officer.

Compensation for Delays. Where appropriate by reason of discovery, the contracting officer may order changes in the schedule or work. If such delays or changes are ordered, any equitable adjustment under the contract will be provided in accordance with the applicable clauses of the contract.

Subcontractors. The Contractor shall insert this clause in all subcontracts that involve performance of work on job site terrain.

Cost. Except as provided in subsection (e) above, the cost of complying with this contract clause shall be included in the prices offered in the schedule for other items of work.

Government Access. The Contractor's arrangement with landowners shall permit the Government or its representatives access to the land to identify cultural resources and conduct appropriate inspections during the Contractor's use of the area or during material procurement.

I.13 WBR 1452.236-85 Instruction for Mobilization and Preparatory Work Schedule Line Item—Bureau of Reclamation (Mar 2022)

The contracting officer estimates that the Section B Mobilization and Preparatory Work schedule line items should not exceed 6% percent of the total contract bid price. Your attention is directed to contract clause WBR 1452.232-81 Alt I Payment for Mobilization and Preparatory Work, which reflects how the Government will pay for this line item, including how payment will be made when the price bid for this schedule line item is higher than the percentage stated herein.

I.14 WBR 1452.243-80 Alt II Modification Proposals– Bureau of Reclamation-Alternate II (Mar 2022)

(a) In submitting any proposal for a modification under this contract (including any proposal for an equitable adjustment resulting from a change under the FAR Changes clause of this contract), the contractor shall:

(1) Comply with the contract time limits for submission of a proposal or as specified by

the contracting officer;
(2) Apply the contract cost principles and procedures in Part 31 of the Federal Acquisition Regulation (FAR) in effect on the date of this contract;
(3) Furnish a breakdown of all costs estimated to complete the work required by the modification (i.e., cost of added work, incurred cost of deleted work already performed, estimated cost of deleted work not yet performed, and net cost of the modification) to include all costs associated with materials (identified by item and quantity), equipment (identified by item, quantity, and whether contractor-owned or rented), categories of direct labor, bond and insurance premium adjustments, subcontracts, overhead and other indirect costs, profit/fee, and any other pricing information requested by the contracting officer, in sufficient detail to permit a detailed analysis of fair and reasonable price and comply with the requirements of the FAR 52.243-6 Change Order Accounting clause of this contract.
(4) Furnish a written justification for any requested time extensions; and
(5) For any pricing adjustment expected to exceed the threshold at FAR 15.403-4 requiring certified cost or pricing data (considering both increases and decreases) --

(i) Submit certified cost and pricing data using the format specified in Table 15-2 of FAR 15.408 unless the contracting officer agrees that an exception applies under the circumstances set forth in FAR 15.403-1;
(ii) Certify in substantially the format prescribed in FAR 15.406-2 that to the best of its knowledge and belief, the data are accurate, complete and current as of the date of agreement on the negotiated price of the modification; and
(iii) Comply with the requirements of either the FAR 52.215-12 Subcontractor Certified Cost or Pricing Data clause or the FAR 52.215-13 Subcontractor Certified Cost or Pricing Data -- Modifications clause of this contract when the adjustment includes a subcontract modification involving a pricing adjustment expected to exceed the threshold at FAR 15.403-4 requiring certified cost or pricing data.

(b) Under the FAR Changes clause of this contract, failure of the contractor to timely assert its right for an adjustment or to submit a proposal for an adjustment by the date specified in the clause (or another date specified by the contracting officer) may result in a unilateral adjustment of the contract by the contracting officer pursuant to the FAR 52.233-1 Disputes clause of this contract.

I.15 WBR 1452.242-80 Postaward Conference – Bureau of Reclamation (Mar 2022)

(a) Prior to the contractor starting work, a postaward conference (as described in FAR Subpart 42.5), will be convened by the contracting activity or contract administration office. The contractor's project manager shall attend the conference. If the contract involves subcontractors, a representative of each major subcontractor is also required to attend.

(b) The conference will be held via TEAMS and scheduled by the Contracting Officer’s Representative.

(c) The contracting officer and the contractor will agree to the date and time of the conference after award of the contract. In event of a conflict in schedules, the contracting officer shall establish the date for the conference.

(d) The contractor shall not be entitled to the reimbursement of any costs associated with attendance at the conference beyond the agreed-to contract price.

PART III

List of Documents, Exhibits, and Other Attachments

Section J – List of Documents, Exhibits and Other Attachments

Attachment Number	Attachment Title
1	Specifications
2	Drawings
3	Standard Form 24 – Bid Bond
4	Standard Form 25-Performance Bond
5	Standard Form 25A-Payment Bond
6	DOI-137 Release of Claims
7	Wage Determinations

Attachment # 1 – Specifications

DESCRIPTION / SPECIFICATIONS TABLE OF CONTENTS

DIVISION 01 - GENERAL REQUIREMENTS

01 11 00 Summary of Work
01 14 10 Use of Site
01 14 12 Work Restrictions and Limitations
01 14 30 Interruption of Service
01 31 19 Project Management and Coordination
01 32 10 Construction Program
01 33 00 Submittals
01 33 26 Electrical Drawings and Data
01 35 10 Safety Data Sheets
01 42 10 Reference Standards
01 46 00 Quality Procedures
01 55 00 Vehicular Access and Parking
01 56 10 Protection of Existing Installations
01 57 20 Environmental Controls
01 60 00 Product Requirements
01 74 00 Cleaning and Waste Management
01 78 30 Project Record Documents

DIVISION 26 - ELECTRICAL

26 05 02 Basic Electrical Materials and Methods
26 05 04 Electrical Demolition and Removal
26 05 10 Conductors and Cables
26 05 20 Grounding and Bonding
26 05 33 Raceways and Boxes
26 20 10 Temporary Power Equipment
26 21 14 Safety Disconnect Switch
26 24 24 Distribution Panelboards
26 28 30 Enclosed Circuit Breakers
26 30 10 Automatic Transfer Switch
26 33 53 Static Uninterruptible Power Supply

DIVISION 51 - DRAWINGS

51 00 10 Photographs
51 02 82 Asbestos Building Inspection Report

DIVISION 52 - DRAWINGS

52 00 00 Drawings

END OF CONTENTS

SECTION 01 11 00
SUMMARY OF WORK

PART 1 GENERAL

1.01 LOCATION

A. Work is located in Mills, Wyoming, in Natrona County.

1.02 PRINCIPAL COMPONENTS OF WORK

A. Work consists of:

1. Replacing enclosed circuit breakers MPN and MPG.
2. Replacing service entrance transfer switch MTS with service entrance Auto Transfer Switch.
3. Removing transfer switch ATS and ATS2.
4. Removing and replacing UPS1 and UPS2.
5. Removing battery charger BCA and safety disconnect switch BCD.
6. Removing bypass transformers KBB, KBA and enclosed circuit breakers XA and XB.
7. Replacing panelboard CPP1, CPP2 and PPAA.
8. Minor low voltage cable replacement.
9. Testing and commissioning installed electrical equipment.

1.03 SPECIFICATIONS REQUIREMENTS

A. Requirements in Division 1, General Requirements, apply to Divisions 2 through 52.

B. Imperative statements in these specifications are Contractor requirements, unless otherwise stated.7865478iu

C. Where specifications are written in streamlined form, words “shall be” are included by inference where a colon (:) is used within sentence or phrase.

1.04 DEFINITIONS

A. When specifications use a word or term defined in Federal Acquisition Regulations (FAR), definition of the word or term shall be in accordance with FAR sections in effect at the time solicitation was issued.

1.05 ACRONYMS

A. The following acronyms apply to specifications Divisions 1 through 52:

1. CO: Contracting Officer.
2. COR: Contracting Officer's Representative.

PART 2 PRODUCTS

Not Used

PART 3 EXECUTION

Not Used

END OF SECTION

SECTION 01 14 10
USE OF SITE

PART 1 GENERAL

1.01 MEASUREMENT AND PAYMENT

A. Cost: Include in prices offered in the Price Schedule for other items of work.

1.02 REFERENCE STANDARDS

A. Bureau of Reclamation (Reclamation)

1. Cleaning Manual-2021 — Inspection and Cleaning Manual for Equipment and Vehicles to Prevent the Spread of Invasive Species, September 2021, available online at www.usbr.gov/mussels/prevention

1.03 SUBMITTALS

A. Submit the following in accordance with Section 01 33 00 - Submittals.

B. RSN 01 14 10-1, Land Use and Landscape Rehabilitation Plan:

1. For each Contractor use site on Government land.

a. Show use location and extent of impact. Uses include but are not limited to the following:

1) Buildings and service areas including offices, shops, warehouses, storage areas, fuel and oil storage areas, and fabrication yards.

2) Parking areas, temporary roads, and haul routes.

3) Utilities including air and power.

4) First-aid and medical facilities.

5) Areas for processing, storing, and disposing of waste materials from construction operations.

6) Temporary fences.

b. Describe methods to preserve, protect, and repair, vegetation (such as trees, shrubs, and grass) and other landscape features on or adjacent to jobsite, which do not interfere with work required under this contract. Include methods to mark work area limits, protect disturbed areas, and prevent erosion.

c. Describe methods to protect, and repair if damaged, existing improvements and utilities at or near jobsite.

d. Describe methods for removing temporary structures and facilities, cleanup, and rehabilitating site after completion of construction activities.

2. Submit revised drawings of changes in use of Government land made during design and erection stages or after use of Government land is in operation.

1.04 PROJECT CONDITIONS

A. Sign in when entering and leaving Room 15, 20, and 21.

1. BOR representative will issue a special work permit.

B. Garage/Loading Dock Area may be used for required construction facilities.

C. The communications room is protected by a Sapphire clean agent fire protection system.

1. Government will disable system before starting construction activities that create smoke or excessive dust.

2. Notify5 days prior to beginning work that creates smoke or dust.

D. When private land is used for construction facilities, or other construction purposes, make necessary arrangements associated with use of private land.

E. Location, construction, operation, maintenance, and removal of construction facilities on Government land will be subject to approval of COR.

F. Do not interfere with work of other contractors or the Government in vicinity, or with reservations made by the Government for use of such land.

G. Housing for construction personnel will not be permitted on Government land, except housing for guards or watchmen as may be approved by COR.

PART 2 PRODUCTS

Not Used

PART 3 EXECUTION

3.01 CLEANING

A. Construction equipment:

1. Before bringing on site, clean construction equipment to remove dirt, vegetation, and other organic material to prevent introduction of noxious weeds, and invasive plant and animal species.

2. Contractor cleaning procedures shall result in equipment being cleaned as well or better than the procedures described in Cleaning Manual.

3. COR will inspect construction equipment following procedures described in Cleaning Manual before allowing equipment onsite.

3.02 RESTORATION

A. Restore Contractor use areas to pre-construction condition.

END OF SECTION

This page intentionally left blank.

SECTION 01 14 12
WORK RESTRICTIONS AND LIMITATIONS

PART 1 GENERAL

1.01 MEASUREMENT AND PAYMENT

A. Cost: Include in prices offered in the Price Schedule for other items of work.

1.02 WORK RESTRICTIONS AND LIMITATIONS

A. Work hours Monday thru Thursday, 7 AM thru 5 PM.

B. Perform onsite work between October 15 and December 15.

C. No outages issued on Fridays.

D. Loads supplied by transfer Switch MTS can be down no more than 3 days.

1. Notify COR 60 days prior to work on MTS.

PART 2 PRODUCTS

Not Used

PART 3 EXECUTION

Not Used

END OF SECTION

This page intentionally left blank.

SECTION 01 14 30
INTERRUPTION OF SERVICE

PART 1 GENERAL

1.01 MEASUREMENT AND PAYMENT

A. Cost:

1. Include cost in prices offered in the Price Schedule for items of work for which interruption of services are required.

1.02 SUBMITTALS

A. Submit in accordance with Section 01 33 00 - Submittals.

B. RSN 01 14 30-1, Interruption of Service Request:

1. Area where work will be done (by number or other description).
2. Outline procedures for accomplishing work including:
   a. Specific safety precautions to be taken.
   b. Type and location of barricades.
   c. Warning signs.
   d. Protective grounds and devices to be used.
3. Commencement time of work.
4. Duration of work.
5. Number of personnel and their classification.
6. Description of equipment to be used.
7. Information indicating that required materials are on site or data indicating shipping dates of materials not on site.

1.03 PROJECT CONDITIONS

A. Coordinate and schedule interruption of services with COR:

1. Coordinate work with Government operations.
2. No specific interruption of service request will be considered unless:
   a. COR has reasonable assurance that materials and equipment required for work will be onsite.
   b. Contractor will be prepared to perform work on date and during period of time requested for specific interruption of service.

3. Allowable time and available interruption of service periods will govern interruption of service requests, work scheduling, onsite delivery of materials, and required drawings and data submittals.

B. Work that interrupt services shall be requested and approved by the COR and occur during an interruption of services period. If the work does not require an interruption of services, notification shall be made to the COR regarding the nature of that work and that interruptions are not required. Show construction interruption of services greater than 4 hours in logic diagram/construction schedule.

PART 2 PRODUCTS

Not Used

PART 3 EXECUTION

Not Used

END OF SECTION

SECTION 01 31 19
PROJECT MANAGEMENT AND COORDINATION

PART 1 GENERAL

1.01 MEASUREMENT AND PAYMENT

A. Cost: Include in prices offered in the Price Schedule for other items of work.

1.02 SUBMITTALS

A. In accordance with Section 01 33 00 – Submittals.

B. RSN 01 31 19-1, Weekly Coordination Meeting Documentation:

1. Provide draft agenda 24 hours before meeting time.
2. 12-week look-ahead schedule covering the following, as applicable:
   a. Include detailed information for the first 4 weeks.
      1) Include submittals in review by Government.
      2) Include dates submittals will be transmitted to Government for review.
   b. Include dates submittals shall be transmitted for work occurring in weeks 5-12.
   c. Shop fabrication review items and tasks.
   d. Construction review items and tasks.
   e. Review of planned and actual dates of activities.
   f. Include dates of required quality control meetings (i.e., preparatory, initial, follow-up).
3. Work completed to date.

C. RSN 01 31 19-2, Weekly Coordination Meeting Minutes:

1. Meeting minutes from scheduled weekly coordination meetings to include the following:
   a. Date, time, and list of attendees.
   b. Summary of topics discussed.
   c. List of action items including the following:
      1) Description of action item.
      2) Responsible party.
      3) Date to be completed.

PART 2 PRODUCTS

Not Used

PART 3 EXECUTION

3.01 PROJECT COORDINATION

A. Coordinate work with COR, other Government staff, and Federal, State, and local agencies including:

1. Casper Control Center,
2. Mills office and other buildings at the Mills WYAO complex.
3. Mills WAPA's switchyard

3.02 MEETINGS

A. Weekly Coordination Meetings are considered significant, but do not relieve the Contractor from responsibility of other meetings required by contract:

1. Weekly Coordination Meetings:
   a. Attendees:
      1) Contractor's project manager, project engineer, superintendent, and Quality Control Supervisor as detailed in Section 01 46 00 – Quality Procedures and any pertinent subcontractors.
      2) COR, CCC (Casper Control Center) supervisor, project manager, project engineer, safety personnel, and other required Government staff.
   b. Purpose:
      1) Review drawings, data, and technical requirements of specifications as well as schedule, progress, and coordination:
         a) Review safety, progress made, schedule, project issues, submittals, Request for Information (RFI), and resolution necessary to meet specifications requirements.
         b) Review dates that activities were started and completed, remaining duration, and percent complete.
         c) Review submittals register, submittals currently in review and approval, and meeting submittals due dates or delivery time frames.
         d) Provide 12-week look-ahead schedule at least 24 hours before meeting time.
         e) Review as-built drawings.

f) Provide meeting minutes from the previous weekly meeting.

c. Attendance at meetings may be remote. Coordinate with COR.

END OF SECTION

This page intentionally left blank.

SECTION 01 32 10
CONSTRUCTION PROGRAM

PART 1 GENERAL

1.01 MEASUREMENT AND PAYMENT

A. Cost: Include in prices offered in the Price Schedule for other items of work.

1.02 DEFINITIONS

A. Out of Sequence Work: An activity that starts before its predecessor activities are completed.

B. Project Calendar(s): Cross reference of numerical work days with calendar days. Project calendars serve as the basis for day/date conversion and assign work days and non-workdays.

C. Resources: Equipment, labor or crews, materials, subcontractors, fabricators, manufacturers, and consultants.

D. Schedule: The Critical Path Method (CPM) of planning and scheduling a construction project where activities are arranged based on activity relationships and network calculations determine when activities can be performed and the critical path of the project.

1.03 REFERENCE STANDARDS

A. Associated General Contractors of America (AGC)

1. AGC Manual-2004 — Construction Planning and Scheduling Manual

B. Bureau of Reclamation (Reclamation)

1. Project Management Framework-2012 — Available at https://www.usbr.gov/pm/docs/Project-Management-Framework-Report.pdf

1.04 SUBMITTALS

A. In accordance with Section 01 33 00 – Submittals:

1. Database files in format compatible with Microsoft Project (.mpp file).
2. Schedule and analysis data electronically.
3. Upon request, provide information and data used to develop and maintain the Construction Program to CO.

B. RSN 01 32 10-1, Representative Information:

1. Designation of authorized representative to develop and maintain Construction Program. Include resume with experience.

C. RSN 01 32 10-2, Baseline Schedule:

1. Include:

a. Construction Program/Schedule database.

b. Microsoft Project layout file (.mpt).

c. Narrative explanation of project schedule development:

1) Describe intended work sequence addressing principal features of work, contract, and intermediate milestones.

2) Include impacts of resource limitations and weather conditions on project schedule development. Include planned number of work hours per day and hours per day for subcontractors.

3) Description of project calendar(s), to include workdays per week, non-workdays due to holidays and weather days. Describe how the weather days were determined and applied to the project calendar(s).

d. Gantt chart for project in 11- by 17-inch portable document format (.pdf).

e. Activity report including logic constraints consisting of predecessors, successors, and constraint dates.

f. Tabular listings of resources, resource limitations, and production rates used to produce baseline schedule:

1) Correlate resources with schedule assumptions and offered price.

2) Tabular listing of resources does not require resource loading in a schedule database.

D. RSN 01 32 10-3, Submittal Register:

1. Separate from scheduling database.

2. Include RSNs in Table 01 33 00A – List of Submittals.

3. Include RSN name and number, date scheduled for submittal, actual date of submittal, and status (e.g., approved, not approved, resubmittal required).

4. Account for Government review times in accordance with Section 01 33 00 – Submittals, Paragraph 1.06 A, and scheduling logic for work activities.

5. Update monthly.

E. RSN 01 32 10-4, Updated Schedule Reports:

1. Government disapproval will be considered failure of Contractor to comply with contract requirements. Payment due date may be delayed until 14 days after

submittal contents are approved in accordance with subparagraph (a)(i)(A) of clause at FAR 52.232-27, Prompt Payment for Construction Contracts.

2. Include:

a. Construction Program database with updated activity and milestone data.

b. Narrative report:

1) State status of project including data date represented by project.

2) Discuss contract milestones and significant activities started, continued, or completed during update period.

3) Discuss contract milestones and significant activities scheduled to start, continue, or be completed during next update period.

4) List of Contractor-initiated changes to current schedule. State reason for action taken and unresolved issues relating to the Construction Program.

5) Definition of project calendars if revised from baseline calendars.

6) When negative float exists, cite specific actions and conditions which caused "behind schedule" condition and provide proposed course of action to complete the project within the specified delivery time. When float changed from previous month's updated schedule, explain reason for change.

7) List of Contractor-initiated changes to current schedule stating reason for action taken and unresolved issues relating to the Construction Program.

c. Microsoft Project layout file (.mpt).

d. Gantt chart for project on 11- by 17-inch print(s) and in portable document format (.pdf).

e. Activity Value Report: As detailed below.

F. RSN 01 32 10-5, Time Impact Analysis:

1. Include:

a. Construction Program database with proposed revised activity and milestone data.

b. Proposed revised schedule due to change or delay. Highlight or list added, changed, or deleted activities.

c. Microsoft Project layout file (.mpt).

d. Gantt chart for project on 11- by 17-inch print(s) and in portable document format (.pdf). Include:

1) Last approved schedule prior to the change or delay event which Time Impact Analysis is being compared.

2) Schedule showing effect of change or delay event.

e. Narrative report explaining results and conclusions.

G. RSN 01 32 10-6, Schedule of Values:

1. Breakdown, in sufficient detail, for lump-sum Contract Line Item Numbers listed in the Price Schedule to determine the value of progress payments. Do not include mobilization and preparatory work item.

1.05 QUALIFICATIONS

A. Representative:

1. Experienced in developing and maintaining construction schedules. Knowledgeable of activities and progress onsite to develop and maintain accurate and reliable schedules.

2. Experience shall include scheduling for at least two other projects of comparable complexity.

1.06 GENERAL

A. Develop, maintain, and use Construction Program to plan, monitor, evaluate, and report accomplishment of work.

1.07 SCHEDULES

A. Prepare construction schedules using Critical Path Method outlined in AGC Manual. Use a computer software program to perform mathematical analysis of scheduling data.

1. Prepare schedule based on required sequence and interdependence of activities. Logically sequence activities.

2. Prepare detailed activity network for accomplishing required work organized by Work Breakdown Structure (WBS):

a. Utilize WBS in lieu of activity codes for organization of schedule.

b. If activity codes are utilized in addition to WBS, use unique activity code names assigned as project codes rather than global codes.

c. Use unique activity identification (ID) prefix for activity IDs corresponding to WBS within the appropriate WBS.

3. If an activity is deleted from the schedule, do not reuse activity ID for a new activity.

4. Activities except “Award” shall have predecessor activities and activities except “Contract Complete” shall have successor activities.

5. Meet contract requirements:

a. Milestone(s) in accordance with the clause at FAR 52.211-10, Commencement, Prosecution, and Completion of Work.

b. Other relevant clauses and specification sections.

c. Include:

1) Activity or project date constraints for interim milestone dates, Government interface dates, contract completion date, work restrictions, other time or seasonal constraints, and other schedule constraints.

2) Work of subcontractors, Government interfaces, and contract milestones.

6. Adjust Construction Program/schedule for seasonal weather conditions:

a. Consider work influenced by high or low ambient temperatures or precipitation. Utilize Microsoft Project P6 calendars to depict historical weather days that impact work.

b. Assign weather calendars to work impacted by weather.

7. Define activities to level of detail resulting in planned or remaining durations being no greater than 20 workdays:

a. Durations for administrative activities (e.g., submittals and reviews) fabrication, manufacturing, and typical level of effort activities (e.g., dewatering, storm water management) will not be subject to workday duration limitation.

8. Include separate activities for submittal preparation and submittal reviews when submittal addresses work that involves:

a. Significant quantities.

b. Long lead times.

c. On the critical path or near critical path.

d. Or as requested by COR.

9. Assign Government submittal review activities to a seven-day calendar with durations in accordance with Section 01 33 00 – Submittals. Include Required Submittal Number (RSN) in activity description.

10. Include contract title, contract number, data date, and Contractor's name on transmittal cover sheet and each sheet of Gantt chart.

11. For each activity on Gantt chart, display activity identification number, activity description, planned or original duration, start date, finish date, total float, and calendar identification.

a. Do not display early start and late start fields.

b. For updated schedules display at completion duration.

12. Include table of abbreviations used in the schedule, listed and defined alphabetically.

13. Use finish to start logic relationships between activities. Do not:

a. Utilize start to start, finish to finish, or start to finish logic relationships.

b. Use negative lead or lag times.

14. Use durations in units of whole workdays.

15. When using multiple calendars with same shift durations, shift start, and shift end times shall be consistent.

16. Provide best estimate of time required to complete activity considering quantity of work, work conditions, location of work, and planned resources for activity.

17. Equate durations of Government reviews and other identified actions to maximum number of calendar days specified in their respective paragraphs.

18. Establish workday calendar(s) and use these in the schedule to translate activity's workday duration into calendar dates.

a. Use unique calendar names; do not use software default calendar names.

b. Save calendars as project calendars, not global calendars.

19. Calculate critical path activities by longest path method.

B. Cost Loading:

1. Input contract values in “Expenses, Planned Expenses Costs” column in Microsoft Project P6 database.

2. Allocate contract value to schedule activities per CLIN amounts in accordance with contract requirements and Measurement and Payment clauses in specifications.

3. Provide a Schedule of Values for lump-sum CLINs. Coordinate content for Schedule of Values with COR prior to submitting schedule.

4. Assign values to appropriate activities:

a. Total of activity values equal total contract value.

b. Every activity does not require a value. For example, submittals, submittal reviews, and manufacturing typically do not have values.

5. Include separate schedule activities to depict amount and timing of payment, if necessary, such as delivery activities.

6. Activity Value Report:

a. Show expense allocation for each activity. Include for each activity:

1) Activity ID.

2) Activity Name.

3) CLIN.

4) Planned Cost.

5) Actual Cost.

6) Budget at Completion.

7) Remaining Cost.

7. Earned Value Report: Generate Cash flow reports showing estimated monthly earned value of activities following guidance in Project Management Framework:

a. Show project cash flow (i.e., summation of all activities) for project duration.

b. Show cumulative monthly cash flow for project duration, including:

1) Budgeted cost of work scheduled or the planned value (PV) of work at monthly intervals.

2) Budget at Completion (BAC).

3) Earned Value Graph (i.e., S-curve with estimated costs).

4) Actual cost (AC) of work performed for each month and the current cumulative amount.

5) Estimated physical percent complete of activity.

6) Earned Value (EV) of work performed for each month and the current cumulative amount.

7) Cost variance (CV).

8) Schedule variance (SV).

9) Cost performance index (CPI).

10) Schedule performance index (SPI).

11) Estimate to complete (ETC).

12) Estimate at completion (EAC).

8. Assign contract values for contract modification activities.

C. Baseline Schedule: Represents Contractor's as-planned approach to accomplishing the work. Do not include actual start dates, percent completes, or actual finish dates.

D. Updated Schedule:

1. Assign unique project file name for each schedule update.

2. Out-of-sequence activities are not allowed. Revise logic to reflect change in work plan.

3. Actual Start and Actual Finish dates beyond the data date of the schedule are not allowed.

4. When scheduling progressed activities, use retained logic.

5. Following receipt of executed contract modification, incorporate activity data stipulated in modification into current schedule for inclusion in next scheduled progress update. Provide appropriate logic relationships for revised activities.

6. Meet monthly with COR at Government's project office or at a location approved by COR to review progress made to end date of progress payment period.
    a. Establish actual date activities were started and completed and remaining duration for each activity started but not completed during the period.
    b. Reported dates should be consistent with Government and Contractor documentation. Discuss and mutually agree upon changes to schedule.
    c. Government may reject Contractor-initiated changes to current schedule that negatively impact Government action initiated based on current schedule.
    d. Finalize updated Construction Program database with mutually agreed upon changes.

1.08 TIME IMPACT ANALYSIS

A. Provide time impact analysis for contract changes (e.g., change order, proposed modification, or value engineering change proposal) to support a claim or request for equitable adjustment to the contract due to delay or accelerated schedule.

B. CO may use time impact analysis to determine if time extension or reduction to contract milestone dates is justified:
    1. Time impact analysis is required for contract changes that effect activity duration or schedule, regardless of whether Contractor's current schedule milestone dates are the same as, earlier than, or later than, those required under the contract.
    2. Changes, additions, or deletions to activities; activity durations; activity time frames; or activity predecessors and successors will not automatically determine extension or reduction of contract time is warranted or due Contractor.
    3. Time extensions for performance will be considered only to extent Contractor's current scheduled milestone dates exceed contract milestone dates.

C. Float is not for exclusive use by or benefit of either the Government or the Contractor.

D. Perform time impact analyses using data in most recent approved schedule update prior to change or delay event.
    1. Prepare proposed revised schedule and narrative description describing and highlighting changes or delays.
    2. Prepare summary comparing results of two schedule analyses: One using current schedule data from last approved updated schedule prior to event requiring analysis, and one using proposed schedule data incorporating changes or delays.
        a. Show contract milestones and activities whose periods of performance have shifted as result of change that affects production, manufacturing, material orders, construction seasons, labor, and equipment usage.
        b. For activities directly affected by change or delay, include the current and proposed items:

1) Activity description.

2) Types and quantities of major pieces of equipment, principal manpower, and pacing materials (materials that affect activity start, duration, or finish).

3) Activity duration.

4) Narrative containing rationale used in developing the proposed logic relationships and activity data.

c. Data date for impacted schedule used in comparison shall be the same as approved updated schedule data date.

d. Base schedule comparisons on status of work and available float at time the CO directs or proposes change to the work, the Contractor submits a value engineering change proposal, or when a delay occurs as shown in approved updated schedule.

1.09 REVIEW AND EVALUATION

A. Baseline Schedule:

1. Within 21 calendar days after receipt of Notice to Proceed:

a. CO will approve or not approve proposed baseline schedule.

b. Upon request from CO, meet with COR for a joint review of proposed baseline schedule.

c. If schedule is not approved, revise and resubmit within 7 calendar days following date of rejection letter.

2. Do not proceed with onsite work until baseline schedule has been approved by Government.

B. Updated Schedules:

1. Submit updated Construction Program schedule monthly and at least seven days prior to the submission of each invoice request for progress payment.

2. If updated schedule is not approved, revise and resubmit updated schedule within 14 calendar days following date of rejection letter.

3. COR will schedule pre-submittal meeting with the Contractor's representative each month to review draft updated schedule prior to Contractor submitting RSN 01 32 10-4, Updated Schedule Reports.

C. Failure to include elements of the work in schedules will not release Contractor from completing required work under the contract.

D. Performance will be evaluated by Government using approved CPM schedules.

1.10 FAILURE TO COMPLY

A. Failure to comply with requirements of this Section shall be grounds for determination by CO that Contractor is not prosecuting the work with sufficient diligence to ensure completion within specified time.

B. CO may terminate the Contractor's right to proceed with the work, or separable part of it, in accordance with default terms of this contract.

PART 2 PRODUCTS

Not Used

PART 3 EXECUTION

Not Used

END OF SECTION

SECTION 01 33 00
SUBMITTALS

PART 1 GENERAL

1.01 MEASUREMENT AND PAYMENT

A. Cost: Include in prices offered in the Price Schedule for other items of work except as specified.

1.02 DEFINITIONS

A. Days: Calendar days.

B. Required Submittal Number (RSN): Identifies items to be submitted together as a complete submittal.

C. Submittals: Considered "shop drawings" within the terms of the clause at FAR 52.236-21, Specifications and Drawings for Construction.

1.03 REFERENCE STANDARDS

A. American Society of Mechanical Engineers (ASME)

1.	ASME Y14.1-20	Drawing Sheet Size and Format

B. National Institute of Building Sciences (NIBS)

1.	NIBS NCS-14	United States National CAD Standards, Version 6

C. U.S. Public Law

1.	Section 508	Rehabilitation Act of 1973 (U.S. Public Law 93-112, as amended)

1.04 SUBMITTAL REQUIREMENTS

A. In case of conflict between requirements of this section and requirements included elsewhere in these specifications, requirements included elsewhere take precedence.

B. General:

1. Prepare in English.
2. Label with contract number and title, and RSN.
3. Measurement Units: US Customary Units.
4. Provide a unique transmittal number for each submittal.

C. Drawings:

1. Minimum Identification in Title Block:

   a. Contract number and title.

   b. Contractor's or supplier's title and drawing number.

   c. Date.

2. Reserve 3- by 3-inch space next to title block for review stamps.

3. Size: D size (22 inches by 34 inches) in accordance with ASME Y14.1.

4. Draw to scale using computer drafting:

   a. In accordance with NIBS NCS.

   b. Electronic file format: Compatible with AutoCAD Version 2021 or later.

   c. Compile using "eTransmit" utility in AutoCAD.

   d. Government will provide electronic AutoCAD format template.

   e. Title block and sheet format:

      1) As shown on Standard Drawing 40-D-7102.

      2) Government will supply template.

      3) Government will supply specific title block information to be used.

   f. Show as-built changes, including revision dates, made during installation. Indicate changes by clouding.

D. Manuals:

1. Copies:

   a. Printed copies: Bound and indexed.

   b. Electronic copies: Adobe portable document format (PDF) submitted to Microsoft Teams. Bookmark longer files to assist in navigating file.

2. Contents:

   a. Parts identification lists, lists of special tools, and accessories.

   b. Schematics and wiring diagrams.

   c. Detailed instructions for installing, operating, lubricating, and maintaining equipment.

   d. As-built drawings, photographs, and test records or reports if required by the specifications.

E. Approval Data:

1. Mark manufacturer's data for commercial products or equipment, such as catalog cut sheets.

   a. Identify manufacturer's name, type, model, size, and characteristics.

b. Illustrate that product or equipment meets requirements of specifications.

c. Mark items to be furnished in a manner that will photocopy (no highlighter).

d. Strike through items that do not apply.

F. Certifications:

1. Certifications by a registered professional: Signed and sealed by registered professional.

2. Manufacturer's certifications: Signed by authorized representative of manufacturer.

G. Photographs:

1. Professional quality.

2. Include contract number, name of equipment, and view title.

3. Digital files in JPEG format.

H. Videos:

1. Digital file in MP4 format.

2. Upload to Microsoft Teams.

1.05 SUBMITTALS PROCEDURES

A. Submit only checked submittals. Submittals without evidence of Contractor's approval will not be reviewed.

B. Submit complete sets of required materials for each RSN as specified in "Submittals Required" column in Table 01 33 00A - List of Submittals. A complete set includes all listed items for RSNs with multiple parts.

C. Submit in accordance with "No. of sets to be sent:" columns in Table 01 33 00A - List of Submittals:

1. Electronic submittals:

a. In PDF:

1) Optical Character Recognition (OCR).

2) Compliant with Section 508 of the Rehabilitation Act.

3) RSNs having more than one requirement shall be bookmarked.

4) RSNs with requirements for files other than PDF (XER, PLF, DWG, etc.) shall be combined using WINZip.

5) Include RSN transmittal letter.

6) Each submittal shall be submitted as one PDF or WINZip (only when multiple file types are required).

b. Personally Identifiable Information (PII) shall be encrypted using WINZip or Adobe Acrobat before transmitting electronically.

2. Submit electronic submittals via Microsoft Teams:

a. Access to Microsoft Teams will be made available for transmission of submittals, correspondence, and information sharing following Notice to Proceed.

b. Submittals received after 5:00 p.m. Mountain Time shall be documented as received the next business day.

D. Include the following information in transmittal letters:

1. Cover Letter:

a. Contract number and title.

b. RSN for attached submittal.

c. Responsible code.

d. Identify submittal as initial or resubmittal.

2. Submittal contents following cover letter. Shall include all listed items for RSNs with multiple parts.

E. Resubmittal of submittals not approved:

1. Mark changes such that they are readily identifiable and show revision date. Resubmitted drawings shall include a revision block with date.

2. Describe reasons for significant changes in transmittal letter.

3. Resubmit returned submittals within 14 calendar days after receiving comments.

4. Requirements for initial submittals apply to resubmittals.

5. Resubmittals shall be complete submittals without reference to the original submittal.

F. Submit each RSN under a separate transmittal letter. Multiple RSNs submitted under a single letter will not be reviewed.

1.06 REVIEW OF SUBMITTALS

A. Time Required:

1. Submittal review will require 28 calendar days for review of each submittal or resubmittal, unless otherwise specified.

2. Time required for review of each submittal or resubmittal begins when complete sets of materials required for a particular RSN are received and extends through the date the response is uploaded to Microsoft Teams.

3. Provide Submittal Register as required within Section 01 32 10 – Construction Program. Submittal Register shall be complete and include anticipated submittal dates for each RSN:

   a. Division 1 submittals shall be provided per due date or delivery time provided within Table 01 33 00A – List of Submittals.

   b. Sequence Division 2 through 26 submittals to maintain Contractor's construction schedule, with submittals intentionally staggered. Submit no more than 5 submittals, counting original and resubmittals, per Division(s) listed below within one 7-day period.

   c. Contractor and Government shall mutually agree to a revised review time for submittals received in excess of 5 submittals per 7-calendar day period for Division(s) listed above.

   d. Approval drawings and data submittals shall be approved by the Government prior to purchase of applicable materials.

B. Time in Excess of Specified:

1. The CO may extend contract completion date to allow additional time for completing work affected by excess review time.

   a. Time extension will be to extent that excess review time caused delay to contract completion date.

   b. Time extension will not exceed time used in excess of specified number of days for review of submittals or resubmittals.

   c. Concurrent days of excess review time resulting from review of 2 or more separate submittals or resubmittals will be counted only once in extending contract completion date.

2. No time extension will be allowed if Contractor fails to make complete action submittals in sequence and within time periods specified.

3. Adjustment for delay will be made only to extent that:

   a. Approval was required under contract, and

   b. Requests for approval were submitted as required, in a timely fashion, and were approved.

4. Adjustment will be subject to terms of paragraphs (b) and (c) of the clause at FAR 52.242-14, Suspension of Work; however, no such delay shall be deemed to be a "suspension order" as the term is used in that clause.

C. Submittal Response:

1. Response letter will indicate whether submittal is approved, not approved, acceptable, not acceptable, or acknowledged receipt.

   a. Revise and resubmit submittals not approved or not acceptable.

b. Do not change designs without approval of CO after drawings, documentation, and technical data have been approved.

2. Request For Information (RFI). A response will be provided within 28 calendar days.

3. General Correspondence to the COR. A response will be provided within 28 calendar days.

1.07 TRANSMITTAL

A. Microsoft Teams access will be established for uploading all correspondence and transmittals listed in Table 01 33 00A - List of Submittals.

B. Submittals required by specifications, but not listed in Table 01 33 00A - List of Submittals:

1. Submit in accordance with this section.

2. Submit to COR unless otherwise specified.

PART 2 PRODUCTS

Not Used

PART 3 EXECUTION

Not Used

Table 01 33 00A - List of Submittals

* CO indicates Contracting Officer, and COR indicates Contracting Officer's Representative.

RSN	Clause or Section Title	Submittals required	Due date or delivery time	Respon-sible code	No. of sets to be sent to: *	
					CO	COR
1	Performance and Payment Bonds - Construction FAR 52.228-15	Performance and Payment Bonds	No later than 10 days after award	CO	1 electronic	0
2	Additional Bond Security FAR 52.228-2	Additional Bond Security	No later than 10 days after any modification that increases the contract value	CO	1 electronic	0
3	Insurance-Work on a Government Installation FAR 52.228-5	1) Written certification that the required insurance has been obtained 2) Current certification of insurance for each subcontractor	Before commencing onsite work	CO	1 electronic 1 electronic	0
4	Liability Insurance DIAR 1452.228-70	Acceptable Certificate of Liability Insurance	Prior to commencement of work under the contract	CO	1 electronic	0
5	Release of Claims DIAR 1452.204-70	Release of Claims (DI-137) against the Government	After completion of the work and prior to final payment	CO	1 electronic	0
6	Personal Identity Verification of Contractor Personnel FAR 52.204-9	SF-85 and OF-306 for each employee and subcontractor employee working on site	No later than 10 days after receipt of Notice to Proceed or 10 days before commenting work (for new hire)	CO	1 electronic	0
7	Subcontracts (Labor Standards) FAR 52.222-11	1) List of subcontractors	No later than 14 days after award of contract	COR	1 electronic	1 electronic
8	Subcontracts (Labor Standards) FAR 52.222-11	2) Statement and Acknowledgement Form (SF-1413) for each subcontract	No later than 14 days after award of subcontract	COR	1 electronic	1 electronic
9	Payrolls and Basic Records FAR 52.222-8	Copies of all payrolls	Weekly for each week of contract performance	COR	1 electronic encrypted	1 electronic encrypted
10	Site Security GP-7	List of Contractor and subcontractor employees	Submitted and approved prior to arriving at worksite	COR	0	1 electronic encrypted
11	Site Security GP-7	List of vehicles and equipment to be brought on site	Submitted and approved prior to arriving at worksite	COR	0	1 electronic encrypted

Table 01 33 00A - List of Submittals

* CO indicates Contracting Officer, and COR indicates Contracting Officer's Representative.

RSN	Clause or Section Title	Submittals required	Due date or delivery time	Respon-sible code	No. of sets to be sent to: *	
					CO	COR
12	Superintendence by the Contractor FAR 52.236-6	Site Superintendent	Submitted and approved at least 28 days before mobilization	COR	0	1 electronic
01 14 10-1	Use of Site	Land Use and Landscape Rehabilitation Plan	Submitted and approved at least 28 days before mobilization	COR	0	1 electronic
01 14 30-1	Interruption of Service	Interruption of Service Request	As needed, 60 days before proposed interruption of service.	COR	0	1 electronic
01 31 19-1	Project Management and Coordination	Weekly Coordination Meeting Documentation	Weekly, 3 days prior to meeting	COR	0	1 electronic
01 31 19-2	Project Management and Coordination	Weekly Coordination Meeting Minutes	Weekly, no later than 3 days after meeting	COR	0	1 electronic
01 31 19-3	Project Management and Coordination	Expanded Temporary Right-of-Way Land Use Coordination (if required)	At least 6 months prior to use of land	COR	0	1 electronic
01 32 10-1	Construction Program	Representative Information	No later than 21 days after receipt of Notice to Proceed	COR	0	1 electronic
01 32 10-2	Construction Program	Baseline Schedule	No later than 21 days after receipt of Notice to Proceed	COR	0	1 electronic
01 32 10-3	Construction Program	Submittal Register	Submitted and approved no later than 28 days after receipt of Notice to Proceed and monthly after approval	COR	0	1 electronic
01 32 10-4	Construction Program	Updated Schedule Reports	Monthly after Baseline Schedule is approved	COR	0	1 electronic
01 32 10-5	Construction Program	Time Impact Analysis	No later than 28 days after the CO directs a contract change, with any proposal for a future modification, with any value engineering proposal, or with any request or claim for an equitable adjustment to the contract	COR	0	1 electronic
01 32 10-6	Construction Program	Schedule of Values	Submitted and approved before any payment other than bonds and insurance	COR	0	1 electronic

Table 01 33 00A - List of Submittals

* CO indicates Contracting Officer, and COR indicates Contracting Officer's Representative.

RSN	Clause or Section Title	Submittals required	Due date or delivery time	Respon-sible code	No. of sets to be sent to: *	
					CO	COR
01 35 10-1	Safety Data Sheets	Complete LHM and SDS	Submitted and approved at least 28 days before jobsite delivery of hazardous material	COR	0	1 electronic
01 35 10-2	Safety Data Sheets	Updated LHM and SDS	Submitted and approved at least 28 days before jobsite delivery of hazardous material not previously listed	COR	0	1 electronic
01 46 00-1	Quality Procedures	Contractor Quality Control Program	Submitted and approved at least 28 days before mobilization	COR	0	1 electronic
01 46 00-2	Quality Procedures	Contractor's Daily Reports	Weekly	COR	0	1 electronic
01 46 00-3	Quality Procedures	Quality Control Supervisor Resume	Submitted and approved at least 28 days before mobilization	COR	0	1 electronic encrypted
01 46 00-4	Quality Procedures	Contractor's Quality Testing Plan	Submitted and approved at least 28 days before mobilization	COR	0	1 electronic
01 46 00-5	Quality Procedures	Summary of Test Results	Monthly	COR	0	1 electronic
01 55 00-1	Vehicular Access and Parking	Temporary Access Roadway Plan	Submitted and approved at least 28 days before mobilization	COR	0	1 electronic
01 55 00-2	Vehicular Access and Parking	Post-Construction Video	No later than 7 days after completing construction	COR	0	1 electronic
01 55 00-3	Vehicular Access and Parking	Post-Repair Video	No later than 7 days after completing repair	COR	0	1 electronic
01 56 10-1	Protection of Existing Installations	Plan for Protecting Existing Installations	Submitted and approved at least 28 days before beginning work in area of installation	COR	0	1 electronic
01 74 00-1	Cleaning and Waste Management	Waste Production and Disposal Plan	Submitted and approved at least 28 days before mobilization	COR	0	1 electronic
01 74 00-2	Cleaning and Waste Management	Waste Production and Disposal Records	No later than 7 days after waste disposal	COR	0	1 electronic
01 74 00-3	Cleaning and Waste Management	Environmental Consultant Resume	At least 28 days before beginning environmental assessment	COR	0	1 electronic
01 74 00-4	Cleaning and Waste Management	Environmental Site Assessment	No later than 14 days after completion of work	COR	0	1 electronic

Table 01 33 00A - List of Submittals

* CO indicates Contracting Officer, and COR indicates Contracting Officer's Representative.

RSN	Clause or Section Title	Submittals required	Due date or delivery time	Respon-sible code	No. of sets to be sent to: *	
					CO	COR
01 78 30-1	Project Record Documents	As-built Drawings	No later than 28 days after completion of work	COR	0	1 electronic
01 78 30-2	Project Record Documents	Final Drawings	No later than 28 days after completion of work	COR	0	1 electronic
01 78 30-3	Project Record Documents	Extra Materials	No later than 28 days after completion of work	COR	0	1 electronic
26 05 04-1	Demolition and Removal	Electrical Outage and Demolition Plan	In accordance with approved RSN 01 32 10-3 Submittal Register	COR	0	1 electronic
26 05 10-1	Conductors and Cables	Approval Data	In accordance with approved RSN 01 32 10-3 Submittal Register	COR	0	1 electronic
26 05 10-2	Conductors and Cables	Field Test Reports	In accordance with approved RSN 01 32 10-3 Submittal Register	COR	0	1 electronic
26 05 20-1	Grounding and Bonding	Approval Data	In accordance with approved RSN 01 32 10-3 Submittal Register	COR	0	1 electronic
26 05 20-2	Grounding and Bonding	As-built Drawings	In accordance with approved RSN 01 32 10-3 Submittal Register	COR	0	1 electronic
26 05 20-3	Grounding and Bonding	Field Test Reports	In accordance with approved RSN 01 32 10-3 Submittal Register	COR	0	1 electronic
26 05 33-1	Raceways and Boxes	Approval Data	In accordance with approved RSN 01 32 10-3 Submittal Register	COR	0	1 electronic
26 05 33-2	Raceways and Boxes	New Conduit Routing Plan	In accordance with approved RSN 01 32 10-3 Submittal Register	COR	0	1 electronic
26 20 10-1	Temporary Power Equipment	Temporary Power Installation Plan	In accordance with approved RSN 01 32 10-3 Submittal Register	COR	0	1 electronic
26 20 10-2	Temporary Power Equipment	Temporary Power Removal Plan	In accordance with approved RSN 01 32 10-3 Submittal Register	COR	0	1 electronic
26 21 14-1	Manual Disconnect Switch	Approval Data	In accordance with approved RSN 01 32 10-3 Submittal Register	COR	0	1 electronic
26 24 24-1	Distribution Panelboards	Approval Drawings and Data	In accordance with approved RSN 01 32 10-3 Submittal Register	COR	0	1 electronic
26 24 24-2	Distribution Panelboards	Factory Test Report	In accordance with approved RSN 01 32 10-3 Submittal Register	COR	0	1 electronic

Table 01 33 00A - List of Submittals

* CO indicates Contracting Officer, and COR indicates Contracting Officer's Representative.

RSN	Clause or Section Title	Submittals required	Due date or delivery time	Respon-sible code	No. of sets to be sent to: *	
					CO	COR
26 24 24-3	Distribution Panelboards	Operation and Maintenance Instruction Books	In accordance with approved RSN 01 32 10-3 Submittal Register	COR	0	1 electronic
26 24 24-4	Distribution Panelboards	Field Test Reports	In accordance with approved RSN 01 32 10-3 Submittal Register	COR	0	1 electronic
26 28 30-1	Enclosed Circuit Breakers	Approval Drawings and Data	In accordance with approved RSN 01 32 10-3 Submittal Register	COR	0	1 electronic
26 28 30-2	Enclosed Circuit Breakers	Factory Test Report	In accordance with approved RSN 01 32 10-3 Submittal Register	COR	0	1 electronic
26 28 30-3	Enclosed Circuit Breakers	Operation and Maintenance Instruction Books	In accordance with approved RSN 01 32 10-3 Submittal Register	COR	0	1 electronic
26 28 30-4	Enclosed Circuit Breakers	Field Test Reports	In accordance with approved RSN 01 32 10-3 Submittal Register	COR	0	1 electronic
26 30 10-1	Automatic Transfer Switch	Approval Drawings and Data	In accordance with approved RSN 01 32 10-3 Submittal Register	COR	0	1 electronic
26 30 10-2	Automatic Transfer Switch	Installation Plan	In accordance with approved RSN 01 32 10-3 Submittal Register	COR	0	1 electronic
26 30 10-3	Automatic Transfer Switch	Field Test Data	In accordance with approved RSN 01 32 10-3 Submittal Register	COR	0	1 electronic
26 30 10-4	Automatic Transfer Switch	Final Drawings and Data	In accordance with approved RSN 01 32 10-3 Submittal Register	COR	0	1 electronic
26 33 53-1	Static Uninterruptible Power Supply	Approval Drawings and Data	In accordance with approved RSN 01 32 10-3 Submittal Register	COR	0	1 electronic
26 33 53-2	Static Uninterruptible Power Supply	Installation Plan	In accordance with approved RSN 01 32 10-3 Submittal Register	COR	0	1 electronic
26 33 53-3	Static Uninterruptible Power Supply	Factory Test Reports	In accordance with approved RSN 01 32 10-3 Submittal Register	COR	0	1 electronic
26 33 53-4	Static Uninterruptible Power Supply	Operations and Maintenance Instruction Books	In accordance with approved RSN 01 32 10-3 Submittal Register	COR	0	1 electronic
26 33 53-5	Static Uninterruptible Power Supply	Field Test Reports	In accordance with approved RSN 01 32 10-3 Submittal Register	COR	0	1 electronic

END OF SECTION

SECTION 01 33 26
ELECTRICAL DRAWINGS AND DATA

PART 1 GENERAL

1.01 MEASUREMENT AND PAYMENT

A. Electrical Drawings and Data:

1. Payment: Lump-sum price offered in Price Schedule

1.02 REFERENCE STANDARDS

A. American Society of Mechanical Engineers (ASME)

1. ASME Y14.1-2012 — Decimal Inch Drawing Sheet Size And Format

B. Institute of Electrical and Electronic Engineers (IEEE)

1. IEEE 315-1975(1993) — Graphic Symbols For Electrical And Electronics Diagrams (Including Reference Designation Letters)
2. IEEE C37.2-2008 — Electrical Power System Device Function Numbers, Acronyms, and Contact Designations
3. IEEE Y32.9-1972(1989) — Graphic Symbols for Electrical Wiring and Layout Diagrams Used in Architecture and Building Construction

C. National Electrical Manufacturers Association (NEMA)

1. NEMA ICS 1-2000(2008) — Industrial Control and Systems: General Requirements

1.03 SUBMITTAL PROCEDURES

A. In addition to the requirements in Section 01 33 00 - Submittals, prepare electrical drawings and data submittals in accordance with the following.

B. Drawings, general:

1. Device designations and symbols:
   a. Conform to IEEE 315, IEEE C37.2, IEEE Y32.9, and NEMA ICS-1.
   b. As indicated on Standard Drawings 104-D-1150.
2. Size: D-size prints as defined in ASME Y14.1 made from original drawings.

3. Indicate changes on revised drawings to distinguish them from previous submittals. Describe reasons for significant changes in submittal letters.

C. Approval Drawings in Government Format:

1. General:

a. Furnish with Government title block and in form as indicated on Standard Drawing 40-D-7102.

b. Government will provide specific title block information when drawings are submitted.

c. Government may revise conductor or device designations on Contractor's drawings when drawings are approved at no change in contract price or completion time.

2. Wiring Diagram Drawings:

a. Match with schematic diagram drawings.

b. Indicate point-to-point wiring in accordance with Standard Drawing 104-D-1165.

c. Indicate equipment as mounted on back, side, swing, and door panels. Show panel as viewed from wiring side of panel.

d. Identify each item of equipment with designation indicated on schematic diagram.

e. Identify control and protective devices with IEEE, NEMA device number as indicated on specifications drawings or on Standard Drawing 104-D-1150.

f. Identify components such as fuses and resistors by value.

g. Indicate wiring of devices and items of equipment including terminal number.

h. Indicate cables, cable and individual wire designations, and connections to external circuits.

i. Cable designations: Similar to designations on Standard Drawing 104-D-1165.

j. Show no more than one panel per drawing.

D. Approval Drawings and Data in Manufacturer's Format:

1. General: Furnish with manufacturer's standard format, except as noted below.

2. Equipment Layout Drawings:

a. Indicate dimensions of equipment.

b. Indicate location of devices and items of equipment including nameplates, terminal blocks, wiring ducts, bus, conduit entries, and other features in their relative physical location.

c. Indicate method of securing equipment to deck, floor, or wall.

d. Identify each device and item of equipment with a bill of material reference number.

3. Bill of Material List:

a. Provide information on manufacturer, style, type, rating, quantity, and other identifying information for each device or item of equipment.

b. Provide unique reference number for each device or item of equipment listed on bill of material.

4. Nameplate Lists: Provide information on type of material, size, and engraved lettering.

5. Wiring Diagrams:

a. Indicate equipment as mounted on each back panel, side panel, and door. Each panel shall be indicated as viewed from wiring side of panel.

b. Identify each item of equipment with the device designation indicated on schematic diagrams.

c. Indicate point-to-point wiring in accordance with Standard Drawing 104-D-1165.

d. Indicate cables, cable and individual wire designations, and connections to all external circuits.

e. Indicate no more than one panel per drawing.

6. Manufacturer's Technical Catalog Data:

a. Provide technical data for each device or item of equipment.

b. Include manufacturer's name and address: catalog number, type, style, or model number; electrical ratings; and dimensions.

c. Where several items are listed on same sheet, indicate items being submitted for approval and cross out items that do not apply.

d. Demonstrate proposed device or item of equipment meets specifications requirements.

e. Mark catalog data sheet with appropriate bill of material (BOM) item number.

f. Assemble catalog data sheet into one enclosing cover with BOM index.

7. Time-Current Characteristic and Equipment Coordination Curves:

a. Provide time-current characteristic curves for adjustable and non-adjustable protective devices.

b. Provide equipment coordination curves for:

1) Transformer inrush current.

2) Transformer full load current.

3) Transformer thermal and mechanical damage.

c. Original plot on log-log graph paper.

d. Illustrate degree of selectivity being provided.

8. Job Hazard Analysis (JHA):

a. Provide when the Government will be performing factory inspection of UPS.

b. Prepare JHA in accordance with 29 CFR 1910, Subpart I.

c. As a minimum include the following in JHA:

1) Factory address and name of site visit contact person.

2) Date of JHA.

3) Purpose of JHA, for example "Visitor Safety Procedures".

4) Hazards.

a) Types of hazards at factory.

b) Safety procedures in or around high-voltage test labs.

c) Safety procedures on factory floor.

5) Personal Protective Equipment.

a) List of equipment required.

b) List of equipment provided by factory.

6) Emergency response.

a) Name and phone number of Factory Safety Officer.

b) Employees trained in emergency conditions (CPR and First Aid).

c) Factory fire protection/evacuation procedures.

d) Nearest hospital or emergency room.

7) Name, title and signature of factory official approving JHA.

E. As-built Drawings:

1. In accordance with Section 01 78 30 – Project Record Documents.

F. Test Reports:

1. Typed, 8 1/2- by 11-inch sheet/format.

2. Certified, signed, dated, and attested to having passed requirements and tests.

3. Provide data summary and necessary graphs and plots of tests performed.

G. Operation and Maintenance Instructions Books:

1. Print copies:
   a. Assemble each set of material into one or more books with enclosing covers.
2. Electronic copies:
   a. Adobe Acrobat (.pdf) format on DVD discs.
   b. Conform to print copies.
   c. Bookmark file(s) to aid in navigating.
3. Provide following items:
   a. Index sheet at front of each book which provides page or index tab number information for each device or item of equipment in book.
   b. Manufacturer's operation and maintenance procedures: installation details, as necessary; and catalog data sheets for each device or item of equipment.
   c. List of recommended spare parts and components.
   d. Parts lists for replacement parts.
   e. Manufacturer's full-size circuit breaker and fuse time-current curves.
   f. Copies of factory test reports.
   g. Copies of bills of materials
   h. Field test reports.
   i. Copies of final drawings.
      1) Maximum size: 11- by 17-inch.

PART 2 PRODUCTS

Not Used

PART 3 EXECUTION

Not Used

*****Failure to provide Electrical Drawings and Data as outlined in the deliverables will be reflected in the CPARS reports IAW with G.4 DOI-AAAP 0050 V3.******

END OF SECTION

This page intentionally left blank.

SECTION 01 35 10
SAFETY DATA SHEETS

PART 1 GENERAL

1.01 MEASUREMENT AND PAYMENT

A. Cost:

1. Include in prices offered in the Price Schedule for other items of work.

1.02 DEFINITIONS

A. LHM: List of Hazardous Materials.

B. SDS: Safety Data Sheet.

1. Referred to as Material Safety Data Sheets in the clause at 52.223-3, Hazardous Material Identifications and Material Safety Data - Alternate 1.

1.03 APPLICATION

A. For the purposes of this contract, "delivered under this contract" in paragraph (b) of the clause at FAR 52.223-3, Hazardous Material Identification and Material Safety Data - Alternate 1, includes:

1. Materials delivered to Government.
2. Materials incorporated into work.
3. Materials used by the Contractor during contract performance at the jobsite.

1.04 SUBMITTALS

A. Submit the following in accordance with Section 01 33 00 - Submittals.

B. RSN 01 35 10-1, Complete LHM and SDS.

C. RSN 01 35 10-2, Updated LHM and SDS:

1. Comply with paragraph (e) of clause at FAR 52.223-3, Hazardous Material Identification and Material Safety Data - Alternate 1.

1.05 DELIVERY

A. Do not deliver hazardous materials to jobsite which are not included on original or previously updated LHM and SDS before receipt of updated LHM and SDS by COR.

PART 2 PRODUCTS

Not Used

PART 3 EXECUTION

Not Used

END OF SECTION

SECTION 01 42 10
REFERENCE STANDARDS

PART 1 GENERAL

1.01 MEASUREMENT AND PAYMENT

A. Cost:

1. Include in prices offered in the Price Schedules for other items of work.

1.02 REFERENCE STANDARDS

A. Referenced editions of standard specifications, codes, and manuals form a part of this specification to the extent referenced.

B. These specifications take precedence when conflicting requirements occur between specifications and referenced standard.

1.03 JOBSITE REFERENCE STANDARDS

A. Maintain at fabrication site, access to referenced standard specifications, codes, and manuals required for work in progress at fabrication site. Make available for use by the Government.

B. Maintain onsite, access to referenced standard specifications, codes, and manuals required for onsite work in progress. Make available for use by the Government.

1.04 AVAILABILITY

A. Code of Federal Regulations (CFR): Available online at

1. https://www.ecfr.gov/, authorized by the National Archives and Records Administration (NARA).

B. Bureau of Reclamation Documents:

1. Reclamation Safety and Health Standards (RSHS) may be downloaded at https://www.usbr.gov/safety/rshs/index.html.
2. Bureau of Reclamation Standard Specifications are designated with an M- number. Copies of individual standards may be obtained upon request of the CO.
3. Bureau of Reclamation manuals and other publications including significant scientific, technical, and engineering works are available upon request of the CO.

C. Industrial and Governmental Documents:

1. When a reference has a joint designation (e.g., ANSI/IEEE) these specifications generally cite the proponent organization (e.g., IEEE).
2. Addresses for obtaining industrial and governmental (other than Federal and Bureau of Reclamation specifications and standards) specifications, standards, and codes are listed in Table 01 42 10A – Addresses for Specifications, Standards, and Codes.

Table 01 42 10A – Addresses for Specifications, Standards, and Codes

Acronym	Name and Address	Telephone
AGC	Associated General Contractors of America 333 John Carlyle Street, Suite 200 Alexandria, VA 22314 www.agc.org	703-548-3118
ANSI	American National Standards Institute 1819 L. Street, NW. Washington, DC 20036 www.ansi.org	202-293-8020
ASME	American Society of Mechanical Engineers 3 Park Avenue New York, NY 10016-5990 www.asme.org	800-843-2763
ASTM	ASTM International P.O. Box C700 100 Barr Harbor Drive West Conshohocken, PA 19428-2959 www.astm.org	610-832-9585
IEEE	Institute of Electrical and Electronics Engineers 3 Park Avenue,17th Floor New York, NY 10016-5997 www.ieee.org	212-419-7900
NEMA	National Electrical Manufacturers Association 1300 N 17th Street, Suite 1847 Rosslyn, VA 22209 www.nema.org	703-841-3200
NETA	International Electrical Testing Association Inc. 3050 Old Centre Ave., Suite 102 Portage, MI 49024 http://www.netaworld.org/	269-488-6382

Table 01 42 10A – Addresses for Specifications, Standards, and Codes

Acronym	Name and Address	Telephone
NFPA	National Fire Protection Association One Batterymarch Park P.O. Box 9101 Quincy, MA 02269-9101 www.nfpa.org	800-344-3555 617-770-3000
NIBS	National Institute of Building Sciences 1090 Vermont Avenue, NW., Suite 700 Washington, DC 20005-4905 www.nibs.org	202-289-7800
UL	Underwriters Laboratories, Inc. 333 Pfingsten Road Northbrook, IL 60062-2096 www.ul.com	847-272-8800

PART 2 PRODUCTS

Not Used

PART 3 EXECUTION

Not Used

END OF SECTION

This page intentionally left blank.

SECTION 01 46 00
QUALITY PROCEDURES

PART 1 GENERAL

1.01 MEASUREMENT AND PAYMENT

A. Cost: Include in prices offered in the Price Schedule for other items of work.

1.02 DEFINITIONS

A. Contractor Quality Testing: Specified tests shall be performed by the Contractor.

1. The Government may use the test results for Quality Assurance.
2. The Contractor may use the test results as part of Contractor quality control.
   a. The Government anticipates that these tests will be part of the Contractor's quality control program; however, the tests do not relieve the Contractor of providing adequate quality control measures in accordance with the clause at FAR 52.246-12, Inspection of Construction.

B. Quality Assurance: Inspection and tests performed by Government to ensure compliance with the terms of the contract.

C. Quality Control: Activities performed by Contractor to ensure work conforms to contract requirements.

1. The clause at FAR 52.246-12, Inspection of Construction, requires the Contractor to establish an inspection system to ensure quality.
2. Quality Control includes activities in addition to specified Contractor Quality Testing to ensure work conforms to contract requirements.

1.03 SUBMITTALS

A. In accordance with Sections 01 33 00 – Submittals.

B. RSN 01 46 00-1, Contractor Quality Control Program:

1. Base program on the following, which include lump-sum CLINs in Section B, and include preparatory, initial, and follow-up activities for each feature:
   a. Mobilization to site and preparatory work.
   b. Demobilization from site and contract closeout work.

C. RSN 01 46 00-2, Contractor's Daily Reports:

1. Submit daily reports on a weekly basis.

2. As a minimum, the Contractor's Daily Report shall include the following information:

   a. The report shall include a record of all of the Contractor's activities throughout the shift regardless of how minor or complex.

   b. The report shall be started at the beginning of the shift, written during the shift, and completed at the end of the shift and include any information pertinent to the report.

   c. The report shall be prepared in such detail that a person not familiar with the days' work could determine what was done and could calculate the Contractor's direct cost for that day.

   d. The report shall state specific safety violations noted during the shift including corrective actions taken, including names of people involved in the infraction and individual responsible for the correction.

   e. In addition, the report shall document significant discussions held between Government staff and Contractor personnel or other parties involved with the project.

   f. The report shall include the temperature (maximum/minimum), wind conditions, estimated humidity, sunshine, and precipitation (type and intensity), if necessary, for the type of work being performed.

   g. The name of the Contractor's representative onsite during the shift shall be noted, and if the representative is onsite part time. Subcontractor activity shall be documented.

   h. The main body of the report shall contain the location, a detailed description of all work, and sketches or photographs where appropriate to assist with the description of work. This description shall reflect what, where, when, why, who, and how the work was being performed. The report shall provide a record of quantities installed, specific stations or locations of the work, and description by CPM program activity (if applicable). The report shall show labor classification and equipment being used during the shift, work the labor force and equipment is performing, and durations. Equipment that is idle or being repaired shall be noted.

   i. The report shall contain a list of materials and equipment delivered to the job, what materials were installed, and any materials that were refused or wasted during the shift. Other items to be reported include changes in site conditions, modifications in design and installation, photographs taken, environmental compliance or noncompliance, hazardous waste and materials concerns, worker complaints, and observed potential.

D. RSN 01 46 00-3, Quality Control Supervisor Resume:

1. Designation of authorized individual as the Quality Control Supervisor to develop and manage the quality control processes.

2. Resume of the designated Quality Control Supervisor.

3. An alternate Quality Control Supervisor with equal authority and qualifications to act on behalf of the primary Quality Control Supervisor should they not be present on the project site.

E. RSN 01 46 00-4, Contractor's Quality Testing Plan:

1. Address methods, procedures, frequencies, and scheduling for performing quality testing as required in other specification sections.

F. RSN 01 46 00-5, Summary of Test Results:

1. Summary of all test results submitted monthly.

1.04 QUALITY CONTROL PHASES

A. Preparatory Phase:

1. Performed as submittals are being developed and prior to the beginning of work and as detailed below:

a. Notify the COR, in writing, 7 days in advance for beginning any of the required actions of the preparatory phase.

b. Review all approved submittals and identify any missing information or required submittals.

c. Review of each paragraph of applicable specifications and references.

d. Review of contract plans.

e. Check to ensure that all materials and equipment have been tested, submitted, and approved.

f. Check to ensure that provisions have been made to provide required control inspection and testing.

g. Examination of the work area to ensure that all required preliminary work has been completed.

h. Physical examination of required materials, equipment, and sample work to ensure that they are on hand and conform to the approved shop drawings or submitted data.

i. Review of appropriate job hazard analysis.

j. Discussion of procedures for constructing the work including the review of repetitive deficiencies.

k. Arrange for quality control testing if required.

2. Shall include a "Preparatory Meeting" conducted by the Quality Control Manager and shall be attended by the superintendent, other quality control personnel, the foreman responsible for the definable feature, and COR.

a. Results of the preparatory phase actions shall be discussed in the Preparatory Meeting and shall be documented by separate minutes prepared by the Quality Control Manager and attached to the Contractor's Daily Report.

B. Initial Phase:

1. Accomplished at the beginning of a definable feature of work.
2. Verify that control for work developed in the "Preparatory Meeting" is implemented and the work is performed to the level of workmanship required.
3. Performed as detailed below:
   a. Notify the COR, in writing, 7 days in advance of beginning any of the required actions of the initial phase.
   b. Review minutes of "Preparatory Meeting."
   c. Check preliminary work.
   d. Verify adequacy of controls to ensure full contract compliance.
   e. Establish levels of workmanship.
   f. Resolve all differences.
   g. Review of safety information shall include compliance with the safety program and job hazard analysis. Review the job hazard analysis with workers.
4. Shall include an "Initial Phase Meeting" conducted by the Quality Control Manager and shall be attended by the superintendent, other quality control personnel, the foreman responsible for the definable feature, and COR.
5. Results of the initial phase actions shall be discussed in the Initial Phase Meeting and shall be documented by separate minutes prepared by the Quality Control Manager and attached to the Contractor's Daily Report.
6. The initial phase shall be repeated for each new crew on the project site or at any time the established level of workmanship is not being met.

C. Follow-up Phase:

1. Daily checks shall be performed to ensure continuing compliance with contract requirements, including safety and control testing, until completion of the feature of work.
2. Checks shall be made a matter of record in the Contractor's Quality Control documentation.
3. Final follow-up checks shall be conducted, and all deficiencies corrected prior to the start of additional features of work.
4. Quality control personnel shall continually refer back to the standards set in the "Preparatory and Initial Phases."

1.05 QUALIFICATIONS

A. Designate employee as Quality Control Supervisor.

B. Quality Control Supervisor: Experienced quality control supervisor with minimum of 2 years' experience in charge of quality control for construction similar in nature to that required by this contract, with authority to stop work if necessary.

1.06 TESTING ACCEPTANCE

A. Acceptance of material shall be based on the passing of both quality assurance testing and quality control testing.

B. Government quality assurance testing results will prevail in the event of a discrepancy between Contractor's test results and Government test results.

PART 2 PRODUCTS

Not Used

PART 3 EXECUTION

3.01 QUALITY ASSURANCE

A. During the course of the work, the Government may perform quality assurance tests:

1. Tests performed by the Government will be used to ensure compliance with contract requirements and not as a replacement for specified Contractor quality testing.
2. Upon request, make measuring and testing devices available for use by the Government for verification tests.

B. Contractor's Quality Control Supervisor:

1. The Contractor's Quality Control Supervisor shall be at the project site and at actual location of work during work activities and shall have complete understanding of all aspects of the work being performed.
2. The effectiveness of the Contractor's Quality Control Supervisor in prosecuting the Quality Control Program will be subject to continued review and approval by the CO.
3. Should the Contractor's Quality Control Supervisor's efforts be deemed insufficient the Contractor may be required to replace the Quality Control Supervisor at no additional cost to the Government.

C. Contractor's Quality Control Program: The effectiveness of the Contractor's Quality Control Program will be subject to continued review and approval by the CO.

END OF SECTION

SECTION 01 55 00
VEHICULAR ACCESS AND PARKING

PART 1 GENERAL

1.01 MEASUREMENT AND PAYMENT

A. Cost:

1. Include in prices offered in the Price Schedule for other items of work.

1.02 REGULATORY REQUIREMENTS

A. Meet requirements established by jurisdictional authority for use of existing roadways and haul routes; including seasonal or other limitations or restrictions, payment of excess size and weight fees, and posting of bonds conditioned upon repair of damage.

B. Comply with applicable regulations for haul routes over public highways, roads, or bridges.

1.03 SUBMITTALS

A. Submit the following in accordance with Section 01 33 00 - Submittals.

B. RSN 01 55 00-1, Initial Digital Recording.

C. RSN 01 55 00-2, Post Construction Digital Recording.

D. RSN 01 55 00-3, Post Repair Digital Recording.

1.04 SITE CONDITIONS

A. Rights-of-way for access to work from existing roads will be established by Government.

1. In accordance with clause at FAR 52.236-10, Operations and Storage Areas, use only established roadways, parking areas, and haul routes; or temporary roadways, parking areas, or haul routes constructed by Contractor when and as authorized by CO.

2. Subject to clause at FAR 52.249-10, Default (Fixed-Price Construction), unavailability of transportation facilities or limitations thereon shall not become a basis for claims for damages or extension of time for completion of work.

PART 2 PRODUCTS

2.01 MATERIALS

A. Materials to maintain and repair existing roadways, parking areas, and haul routes: In accordance with requirements of jurisdictional authority.

B. Materials to construct, maintain, and repair temporary roadways, parking areas, and haul routes: As approved by COR.

C. Materials to maintain roadways and parking areas constructed under this contract and used by Contractor for construction work: In accordance with specified requirements for construction of those roadways and parking areas.

PART 3 EXECUTION

3.01 EXAMINATION

A. Investigate condition of available public or private roads for clearances, restrictions, bridge-load limits, bond requirements, and other limitations that affect or may affect access and transportation operations to and from jobsite.

3.02 RECORDS

A. Make preconstruction, post construction and post repair digital recordings of roadways and parking areas to be utilized for construction.

1. DVD format with a minimum 720p resolution.
2. Label:
   a. Contract number and title.
   b. Contractor’s name.
   c. Date recording is made.
   d. Preface video with this information.

B. COR will be present during recording. Notify COR at least 3 days prior to recording.

3.03 ESTABLISHED ROADWAYS AND PARKING AREAS

A. Established roadways and parking areas are available for Contractor's use subject to existing restrictions and approval of the COR.

B. Existing onsite streets and driveways may be used for construction traffic. Tracked vehicles are not allowed.

C. Designated areas of existing parking facilities shall not be used by construction personnel.

D. Do not allow heavy vehicles or construction equipment in established parking areas.

3.04 TEMPORARY ROADWAYS AND PARKING AREAS

A. Parking Areas:

1. Arrange for temporary parking areas to accommodate use of construction personnel.
2. Provide additional offsite parking when site space is not adequate.
3. Locate as approved by the COR.

3.05 HAUL ROUTES

A. Perform work on rights-of-way established by Government as necessary to construct and maintain any roads, bridges, or drainage structures required for establishment and use of haul routes for construction operations.

B. Use existing available public highways, roads, or bridges as haul routes subject to applicable local regulations.

C. Minimize interference with or congestion of local traffic.

D. Provide barricades, flaggers, and other necessary precautions for safety of public where haul routes cross public highways or roads.

3.06 MAINTENANCE

A. Maintain roadways, parking areas, and haul routes in a sound, smooth condition.

B. Maintain roads and parking areas until completion and acceptance of all work under this contract. As approved by COR, defer until latest practicable date within specified completion period, placement of surfacing on roads or parking areas subject to heavy and deteriorating use by Contractor's construction operations or equipment.

C. Maintain surfacing of gravel-surfaced roads and parking areas in a smooth condition until completion and acceptance of work under this contract.

3.07 REPAIR

A. Promptly repair ruts, broken pavement, potholes, low areas with standing water, and other deficiencies to maintain road surfacing and drainage in original or specified condition.

3.08 REMOVAL

A. Remove materials used to construct temporary roadways, parking areas, and haul routes prior to contract completion. Recycle salvageable materials as approved by COR.

END OF SECTION

SECTION 01 56 10
PROTECTION OF EXISTING INSTALLATIONS

PART 1 GENERAL

1.01 MEASUREMENT AND PAYMENT

A. Cost:

1. Include in prices offered in the Price Schedule for other items of work, except as specified.
2. Costs for repair of installations damaged by the Contractor's operations are the Contractor's responsibility.

1.02 SUBMITTALS

A. Submit the following in accordance with Section 01330 – Submittals:

B. RSN 01 56 10-1, Plan for protecting existing installations.

1.03 PROJECT CONDITIONS

A. Drawings included in these specifications show items of existing materials and equipment but may not show all equipment and materials existing at the jobsite.

B. Obtain the location of embedded conduit, pipe, cable, ground mat, and other buried items before performing any drilling or cutting of concrete.

PART 2 PRODUCTS

Not Used

PART 3 EXECUTION

3.01 PROTECTION

A. Provide protection for personnel and existing facilities from harm due to the Contractor's operations. Protection shall be subject to approval of the Government.

B. Arrange protective installations to permit operation of existing equipment and facilities by the Government while work is in progress.

C. Do not discharge anything but clear water into building drainage system.

D. Prevent dust from entering ventilating systems.

3.02 ENCLOSURES

A. Enclose work area to prevent dust, spalls, chips, grit, and other foreign material from endangering personnel and contaminating or damaging equipment.

B. Provide enclosures to confine the Contractor's operations to immediate work area.

C. Enclosures shall be subject to approval of the Government.

3.03 REMOVAL OF PROTECTIVE INSTALLATIONS

A. Remove protective installations after purpose has been served. Materials furnished by the Contractor to provide protection remain property of the Contractor.

3.04 REPAIR

A. Repair, at Contractor's expense, damage to existing installations due to Contractor's operations or Contractor's failure to provide proper protection. At the Government's option, damage may be repaired by the Government, and the Contractor will be backcharged repair costs.

END OF SECTION

SECTION 01 57 20
ENVIRONMENTAL CONTROLS

PART 1 GENERAL

1.01 MEASUREMENT AND PAYMENT

A. Cost:

1. Include in prices offered in the Price Schedule for other items of work, except as specified.
2. Costs for damages and work stoppage are the Contractor's responsibility.

1.02 REFERENCE STANDARDS

A. Bureau of Reclamation (USBR)

1. RSHS — Reclamation Safety and Health Standards, including revisions posted at https://www.usbr.gov/safety/rshs/

1.03 REGULATORY REQUIREMENTS

A. Comply with Federal, State, and local laws and regulations.

B. Comply with RSHS.

C. Conform to most stringent requirement in cases of conflict between specifications, regulatory requirements, and RSHS.

D. Contractor shall be responsible for damages resulting from dust originating from Contractor operations in accordance with clause at FAR 52.236-7, Permits and Responsibilities.

E. The CO may stop construction activity in violation of Federal, State, or local laws and additional expenses resulting from work stoppage will be responsibility of Contractor.

1.04 DUST CONTROL

A. Provide dust control and abatement during performance of work.

B. Prevent, control, and abate dust pollution on rights-of-way provided by Government or elsewhere during performance of work.

C. Provide labor, equipment, and materials, and use efficient methods to prevent dust nuisance or damage to persons, property, or activities.

PART 2 PRODUCTS

Not Used

PART 3 EXECUTION

Not Used

END OF SECTION

SECTION 01 60 00
PRODUCT REQUIREMENTS

PART 1 GENERAL

1.01 MEASUREMENT AND PAYMENT

A. Cost:

1. When the Price Schedule includes a separate item for furnishing a material, include cost of furnishing, hauling, storing, and handling in the price offered in the Price Schedule for the item.
2. When the Price Schedule does not included a separate item for furnishing a material, include cost of furnishing, hauling, storing, and handling in the price offered in the Price Schedule for work for which the material is required.

1.02 DEFINITIONS

A. Essential Characteristics: As used in these specifications, the term "essential characteristics" is synonymous with the term "salient characteristics."

B. Salient Characteristics: Those qualities of an item that are essential to ensure that the intended use of the item can be satisfactorily realized.

1.03 REFERENCE STANDARDS

A. American Society of Mechanical Engineers (ASME)

1.	ASME B1.1-2019	Unified Inch Screw Threads, (UN and UNR Thread Form)
2.	ASME B1.20.1-2013 (2018)	Pipe Threads, General Purpose, Inch

B. Bureau of Reclamation (USBR)

1.	RSHS	Reclamation Safety and Health Standards, including revisions posted at https://www.usbr.gov/safety/rshs/

1.04 DELIVERY, STORAGE, AND HANDLING

A. Transport and handle manufactured products in accordance with manufacturer's instructions.

B. Store and protect manufactured products in accordance with manufacturer's instructions and RSHS. Obtain instructions from the manufacturer before delivery of materials to jobsite. Maintain a copy of instructions at jobsite.

C. Protect materials from adverse effects of moisture, sunlight, ultraviolet light, or weather during storage at jobsite.

D. Remove and replace damaged items with new items.

E. Store curing compounds, sealants, adhesives, paints, coatings, sealers, joint compounds, grouts, and similar products at the temperature and environmental conditions recommended by manufacturer.

1.05 MAINTENANCE

A. Extra Materials:

1. Furnish additional maintenance materials specified as "extra materials" in the specifications. Provide maintenance material identical to installed material and provide from the same manufacturer's production lot as installed material.
2. Package extra materials for storage and label with complete product identification on packaging.
3. Deliver extra materials to the Government at jobsite and place in storage as directed by the COR.

PART 2 PRODUCTS

2.01 MATERIALS

A. Provide materials required for completion of work.

B. Provide type and quality described in these specifications. Make diligent effort to procure specified materials from all available sources.

C. Furnish new materials conforming to referenced standards unless otherwise specified.

1. References to equipment, material, articles, or patented processes by trade name, make, or catalog number, shall be regarded as establishing a standard of quality and shall not be construed as limiting competition. The Contractor may, at its option, use equipment, material, article, or process that, in the judgment of the CO, is equal to that named in the specifications, unless otherwise specified.

D. For materials not covered by these or referenced specifications, furnish materials of standard commercial quality.

E. If materials to be used deviate from or are not covered by recognized specifications and standards, submit, for approval, justification for and exact nature of the deviation, and complete specifications for materials proposed for use.

F. Make parts accurately to standard gauge where possible.

1. Use unified screw threads conforming to ASME B1.1 or B1.20.1 for threads, including but not limited to those of bolts, nuts, screws, taps, pipes, and pipefittings.
2. For internal connections only, the Contractor may deviate from ASME standards, provided a complete set of taps and dies are furnished as required to facilitate repair or replacement.

G. Permanently mark fasteners with a symbol identifying the manufacturer and with symbol(s) indicating grade, class, type, and other identifying marks in accordance with reference or applicable standard.

H. Field identification shall meet the following minimum requirements unless specified in other sections:

1. Match designations as shown on drawings.
2. Piping components and accessories:
   a. Permanently attached stainless steel tags.
      1) Attachment method suitable for t environment.
      2) Corrosion resistant braded cable or wire.
      3) Plastic zip-ties not acceptable.
   b. Include at minimum:
      1) Component designation.
      2) Manufacturer's model number.
3. Thermocouple and Test Wells.
   a. Include at minimum:
      1) Component designation.
      2) Material of construction stamped on the well
4. Electrical Panels, Enclosures, and Components Mounted in Enclosures:
   a. Nameplates material:
      1) Indoor – Phenolic-type material
      2) Outdoor (exposed to sunlight) – Stainless steel or brass.
   b. Nameplates shall include individual component designation, for each component or enclosure.
   c. Attach nameplates with pan head self-tapping screws. Do not use adhesives to attach nameplates.
      1) Attach nameplates to pushbuttons, indicating lights, and selector switches in accordance with component manufacturer's instructions. Use of self-tapping screws is not required.

2) Size of letters and figures shall be approximately 7/16 inch for cabinet internal device nameplates and 1 inch for cabinet designations.

d. Cables and Raceway: Permanently affix tag with individual component designation. Cable shall include tags for overall cable as well as individual conductor.

2.02 SUBSTITUTIONS

A. If materials required by these specifications become unavailable, because of Government priorities or other causes, substitute materials may be used.

B. Obtain written approval to use substitute materials from the CO. State in the request for approval the amount of the adjustment, if any, to be made in favor of the Government.

C. The Government's determination as to whether substitution will be permitted and as to what substitute materials may be used, shall be final and conclusive.

D. If approved substitute materials are of less value to the Government or involve less cost to the Contractor than specified material, a contract adjustment will be made in favor of the Government. Where the amount involved or the importance of substitution warrants, a deductive modification to the contract will be issued.

E. No payments in excess of prices offered in the Price Schedule will be made because of substitution of one material for another or because of use of one alternate material in place of another.

2.03 WORKMANSHIP

A. Accurately manufacture and fabricate materials in accordance with best modern practice and requirements of these specifications, notwithstanding minor errors or omissions therein.

B. Use liberal factors of safety and adequate shock-absorbing features in designs, especially for parts subjected to variable stress or shock, including alternating or vibrating stress or shock.

C. Include provisions which prevent components from loosening for shock-absorbing features and parts subject to vibration.

GOVERNMENT CONTRACT SOURCE QUALITY ASSURANCE

D. Materials will be subject to inspection in accordance with clause at FAR 52.246-12 “Inspection of Construction” at following locations, as determined by the CO:

1. At place of production or manufacture.
2. At shipping point.
3. At jobsite.

E. To allow sufficient time to provide for inspection, submit at time of issuance, copies of purchase orders, including drawings and other pertinent information, covering material on which inspection will be made as advised by the CO, or submit other evidence if such purchase orders are issued verbally or by letter.

F. Inspection of materials at locations specified above or waiving of inspection shall not be construed as being conclusive as to whether materials and equipment conform to contract requirements under the clause at FAR "Inspection of Construction," nor shall the Contractor be relieved thereby of the responsibility for furnishing materials meeting the requirements of these specifications.

G. Acceptance of materials will be made only at the jobsite.

PART 3 EXECUTION

3.01 INSTALLATION

A. Install products in accordance with manufacturer's recommendations unless otherwise specified.

3.02 GOVERNMENT CONTRACT FIELD QUALITY ASSURANCE

A. Final inspection and acceptance of materials will be made only at the jobsite after installation and testing.

END OF SECTION

This page intentionally left blank.

SECTION 01 74 00
CLEANING AND WASTE MANAGEMENT

PART 1 GENERAL

1.01 MEASUREMENT AND PAYMENT

A. Cost:

1. Include in prices offered in the Price Schedule for other items of work except as specified.
2. Cost of environmental site assessments are the Contractor's responsibility.

1.02 DEFINITIONS

A. Hazardous waste: Defined as hazardous by 40 CFR 261.3; or by other Federal, State, or local laws or regulations.

1.03 REFERENCE STANDARDS

A. Bureau of Reclamation (USBR)

1.	RSHS	Reclamation Safety and Health Standards, including revisions posted at https://www.usbr.gov/safety/rshs/

B. Code of Federal Regulations (CFR)

1.	40 CFR 261.3	Definition of Hazardous Waste
2.	49 CFR 171-179	Transportation - Hazardous Waste Regulations

1.04 SUBMITTALS

A. Submit the following in accordance with Section 01 33 00 - Submittals.

B. RSN 01 74 00-1, Waste Production and Disposal Plan:

1. For each type of waste, list estimated quantity and planned disposal location.

C. RSN 01 74 00-2, Waste Production and Disposal Records.

1. For each type of waste, list quantity and disposal location.
2. Include certifications that waste was properly disposed.
3. Hazardous wastes manifests.

D. RSN 01 74 00-3, Environmental Consultant Resume:

1. Describe experience on similar project.

E. RSN 01 74 00-4, Environmental Site Assessment.

1.05 QUALIFICATIONS

A. Environmental consultant: Minimum 2 years experience in conducting environmental site assessments for similar construction.

1.06 REGULATORY REQUIREMENTS

A. Comply with Federal, State, and local laws and regulations.

B. Comply with RSHS.

C. Conform to most stringent requirement in cases of conflict between specifications, regulatory requirements, and RSHS.

1.07 PROJECT CONDITIONS

A. Report waste materials discovered at jobsite to COR.

1. Refer to CCC Asbestos Assessment provided for location specific asbestos detection.
2. Cease work in areas where waste may be hazardous until waste materials are investigated by the Government.
3. If waste is hazardous, the CO may order delays in time of performance or changes in work, or both.
4. If such delays or changes are ordered, an equitable adjustment will be made in the contract in accordance with applicable clauses of the contract.

PART 2 PRODUCTS

Not Used

PART 3 EXECUTION

3.01 PROGRESS CLEANING

A. Keep work and storage areas free from accumulations of waste materials and rubbish.

B. Prevent dust from accumulating on any equipment or surface. Wet methods and vacuum extraction shall be used where possible.

3.02 FINAL CLEANUP

A. Remove temporary plant facilities, buildings, concrete footings and slabs, rubbish, unused materials, concrete forms, and other similar materials which are not part of permanent work.

B. Leave premises "broom clean."

C. Clean interior and exterior glass surfaces exposed to view; remove temporary labels, stains and foreign substances; polish transparent and glossy surfaces; vacuum carpeted and soft surfaces.

D. Clean equipment and fixtures to a sanitary condition.

E. Clean debris from roofs, gutters, downspouts and drainage systems.

F. Sweep paved areas and rake clean landscaped areas.

3.03 DISPOSAL

A. Nonhazardous waste materials:

1. Reuse at jobsite or reuse or recycle waste materials removed from jobsite whenever possible.
2. Dispose of materials not reused at jobsite by removal from jobsite.
3. Dispose of nonhazardous waste materials that are not reused or recycled at appropriately permitted disposal facilities.
4. Disposal by Removal:
   a. Reuse or recycle waste materials whenever possible.
   b. Dispose of nonhazardous waste materials that are not reused or recycled at appropriately permitted disposal facilities.

B. Hazardous Waste Disposal:

1. Dispose by removal from jobsite.
2. Recycle hazardous waste whenever possible.
3. Dispose of hazardous waste materials that are not recycled at appropriately permitted treatment or disposal facilities.
4. Transport hazardous waste in accordance with 49 CFR 171-179.

C. Certification: Certify that wastes are disposed of in accordance with Federal, State, and local regulations.

3.04 SITE ASSESSMENT

A. Upon completion of work, perform site assessment at following areas for work done under these specifications:

1. Hazardous waste accumulation areas.
2. Petroleum dispensing and storage areas where aggregate storage of petroleum at jobsite was over 110 gallons.
3. Hazardous material storage areas.

B. Employ qualified environmental consultant to perform assessments.

C. Demonstrate and document by appropriate analytical sampling that site contamination is less than State action cleanup levels.

3.05 RECORDS

A. Keep records of types and amounts of waste materials produced.

B. Keep records of waste material disposal.

END OF SECTION

SECTION 01 78 30
PROJECT RECORD DOCUMENTS

PART 1 GENERAL

1.01 MEASUREMENT AND PAYMENT

A. Cost: Include in prices offered in the Price Schedule for other items of work.

1.02 SUBMITTALS

A. In accordance with Section 01 33 00 - Submittals.

B. RSN 01 78 30-1, As-built Drawings:

1. Certified marked sets: As-built drawings that have been certified by Contractor as up to date and accurate in the description of work.
2. Submit to COR for approval prior to commissioning, training, and Government possession.
3. For Information Only (FIO) Drawings: Revision date and details.
4. Transmit in both hardcopy and electronic form for review and use in training sessions.

C. RSN 01 78 30-2, Final Drawings:

1. Final drawings shall be provided in AutoCAD drawing (.dwg) format and Adobe Acrobat (.pdf).
2. Drawings or output data files produced on a Computer Aided Design and Drafting (CADD) system and furnished to Government shall be compatible with 2020 Autodesk products, .dwg file format, manufactured by Autodesk, Inc., Sausalito, CA.
3. Topographical drawings shall contain point files, point groups, and intelligent Civil 3D object entities such as surfaces, alignments, profiles, and cross-sections as required.
4. ASCII point files shall be included, with a point descriptor glossary.
5. Deliverables shall be “eTransmit” from with the Civil 3D application, to package .dwg files with all resource files and dependencies including fonts, external references, and images.
6. Updated with all changes as marked on As-built drawings to reflect approval comments.

D. RSN 01 78 30-3, Extra Materials:

1. List of extra materials.

1.03 RECORD DRAWINGS

A. Maintain 2 sets of full-size prints of contract drawings marked to show accurate and complete records of as-built conditions.

1. Keep drawings at the jobsite and mark as work progresses.
2. If FIO drawings require changes, mark with revisions.

B. Use the following to represent changes:

1. Supplementary notes, legends, and details necessary to clearly portray as-built construction.
2. In lieu of referencing, incorporate clarifications from other documents such as RFI's, where as-built construction is identified.
3. Include pictures, sketches, or other representations to further explain as-built construction. Do not provide in lieu of as-built drawings.
4. Mark and dimension to show variations between actual construction and that indicated or specified in contract documents.
   a. Include buried or concealed construction and utilities.
   b. Include existing items, topographic features, and utility lines revealed during construction which differ from those shown on contract drawings.
5. Mark to define construction actually provided where choice of materials or methods is permitted in specifications, or where variations in scope or character of work from that of the original contract are authorized.

C. Mark drawings in the following colors:

1. Red: Additions.
2. Green: Deletions.
3. Blue: Notations necessary for explanation of markings.

D. Allow the Government to review the drawings at all times.

E. Upon completion of work, sign marked as-built drawings:

1. Sign and date each as-built drawing as certified correct. If no revisions were necessary to illustrate as-built conditions mark the drawing with "As-Built, No Changes."
2. Only certify FIO drawings which require changes.

1.04 UPDATED RECORD DRAWINGS

A. Update record drawings to document work or services performed for progress payments in accordance with the clauses at FAR 52.232-27, Prompt Payment for Construction Contracts.

1. At a minimum, meet monthly with COR to review and approve progress made to full-sized record drawings prior to the submittal for progress payment. Meeting location to be accepted by COR.
2. Verify with the COR that mark-ups to the drawings are current with the progress of the work prior to submitting invoice for progress payment.

1.05 EXTRA MATERIALS

A. List extra materials provided in accordance with the specifications and Section 01 60 00 – Product Requirements. Provide the list in the following format:

List of Extra Materials				
Specification Section	Material Designation	Material	Manufacturer	Extra Material Item

B. Same type, style, model, and manufacturer as the equipment installed.

C. Package extra materials in hermetically sealed containers labeled with manufacturer's name, part description, and part number.

D. Replace spare parts used during the installation, testing, and commissioning process to provide a complete set of spare parts.

E. Special tools shall be onsite prior to installation of equipment.

1.06 OPERATION AND MAINTENANCE (O&M) MANUALS

A. O&M manuals shall include information required by Government personnel to operate, maintain, and troubleshoot equipment including at minimum the following:

1. Index sheet at front of each manual which provides page or index tab number information for each device or item of equipment in manual.
2. Bill of materials.
3. Previously-approved data submitted under the equipment's Approval Data, Product Data, or similar. Manufacturer's product data sheets, model numbers, and related materials.
4. List of spare parts furnished for this project and list of additional recommended spares not required by these specifications, including part numbers.
5. Description of equipment installation, startup, operation, and maintenance.

6. System maintenance schedule and procedures, including instructions on dismantling, replacing, installing, calibrating, lubricating, configuring, and troubleshooting provided equipment.
7. Onsite commissioning test procedures.
8. Warranty information.
9. SCADA system and communications software connection procedures.
10. Performance shop test reports.
11. Wiring and cable test reports.
12. Operational field test reports.
13. Final Drawings.

B. Contractor delay resulting from failure to provide timely and acceptable documents shall not constitute acceptance of a time extension to the contract.

1.07 WARRANTIES

A. Provide warranties in accordance with the clause at FAR 52.246-21, Warranty of Construction [-Alternate I], the specifications, and this section.

B. Warranty of Construction:

1. Submit data concerning warranty of construction, required by the clause at FAR 52.246-21, Warranty of Construction [-Alternate I], including the warranty period (dates), and warranty contacts with names, addresses, and telephone numbers. Also, post this data, under glass, at a location as directed by the CO.

C. Other Warranties:

1. For other warranties, including those warranties for equipment specified by the CO on a brand name and model basis, provide the following:
2. Warranty List:
   a. Bound and indexed notebook containing written warranties obtained, required, or furnished under the contract. Prepare complete list of warranted products, equipment, materials, processes, and other warranted items. Fully execute and deliver this list to the CO prior to final acceptance of contract work. Provide the list in the following format:

WARRANTY LIST			
Specification Section	Warranted Item	Warranty Period Dates	Point of Contact

3. Equipment Warranty Tags:

   a. At installation, tag each warranted item with a durable, oil- and water-resistant tag approved by the CO.

      1) Attach tag with copper wire and spray with a clear silicone waterproof coating.

      2) Leave date of acceptance and inspector's signature blank until project is accepted.

      3) Provide tags showing the following information:

WARRANTY TAG	
Type of Item	
Warranty Period	[Period] or [Form ___ To ____]
Contract No.	
Inspector's Signature	
Date Accepted	
Construction Contractor	
Name	
Address	
Telephone	
Warranty Contact	
Name	
Address	
Telephone	

PART 2 PRODUCTS

Not Used

PART 3 EXECUTION

Not Used

END OF SECTION

This page intentionally left blank.

SECTION 26 05 02
BASIC ELECTRICAL MATERIALS AND METHODS

PART 1 GENERAL

1.01 MEASUREMENT AND PAYMENT

A. Cost: Include cost of electrical equipment and materials in applicable prices offered in the schedule.

1. Payment under the various items includes cost of:
   a. Furnishing certified calibrated testing equipment.
   b. Performing testing.
   c. Modifying equipment.
   d. Assembling, adjusting, and installing equipment.
   e. Painting equipment and materials.
   f. Brackets, fasteners, bolts, nuts, lock washers, and other accessories required for mounting or installing electrical equipment and materials.
   g. Drilling holes in steel structures (other than tubular structures) as required for mounting or installing electrical equipment and materials.
   h. Furnishing, handling, and storing spare parts for electrical equipment.
   i. Furnishing special tools and appliances for maintenance and adjustment of equipment
   j. Making electrical connections.

1.02 REFERENCE STANDARDS

A. American Society of Mechanical Engineers (ASME)

1.	ASME BPVC-IX 2019	Boiler and Pressure Vessel Code, Section IX – Welding and Brazing Qualifications

B. ASTM International (ASTM)

1.	ASTM A123/A123M-17	Zinc (Hot-Dip Galvanized) Coatings on Iron and Steel Products
2.	ASTM A153/A153M-16a	Zinc Coatings (Hot-Dip) on Iron and Steel Hardware

C. Institute of Electrical and Electronics Engineers (IEEE)

1.	IEEE 4-2013	Techniques for High Voltage Testing
2.	IEEE C2-2017	National Electrical Safety Code (NESC)

D. National Electrical Testing Association, Inc. (NETA)

1. NETA ATS-2025 Acceptance Testing Specifications

E. National Fire Protection Association (NFPA)

1. NFPA 70-2023 National Electrical Code (NEC)

1.03 QUALIFICATIONS

A. Welder Qualifications: In accordance with ASME BPVC-IX.

1.04 MAINTENANCE

A. Provide special tools and accessories required for installation or normal operation and maintenance of equipment and installations. Include studs, bolts, and nuts other than United States Standard used in equipment or installation.

B. Deliver special tools and spare parts for equipment to the COR at 205 Chamberlain Rd, Mills Wyoming .

1. Notify COR upon delivery.
2. Provide shipments with item list(s).

C. Special tools and spare parts shall be onsite prior to installation of equipment.

PART 2 PRODUCTS

2.01 MATERIALS AND EQUIPMENT

A. Conform to NFPA 70 and IEEE C2, and Section 01 60 00 – Product Requirements.

B. Provide galvanized steel mounting brackets, support structures, bolts, nuts, and washers for major items of electrical equipment such as disconnecting switches, insulators, batteries, battery chargers, uninterruptable power supply and automatic transfer switch in accordance with ASTM A 123 and A 153, unless otherwise specified.

C. Provide galvanized steel or non-corrosive metal for mounting bolts, nuts, and washers for minor items of electrical equipment and lighter weight items. Do not use cadmium-plated mounting hardware.

D. Change designs as required where Contractor-furnished electrical equipment and materials differ in size, type, ratings, or other physical properties from designs in these specifications. Contracting Officer will approve changes at Contractor's expense, unless Contractor can demonstrate that changes are necessary regardless of manufacturer.

E. Provide special tools and appliances furnished by manufacturer for maintenance and adjustment of manufacturer's electrical equipment.

2.02 SOURCE QUALITY ASSURANCE

A. Government may inspect electrical equipment at supplier's manufacturing plant during fabrication and testing.

PART 3 EXECUTION

3.01 INSTALLATION

A. Do not remove existing equipment or install electrical equipment until Section 26 05 04, 1.05A is completed.

B. Electrical Installations, Assembly Operations, and Adjustments: Comply with NFPA 70 and IEEE C2.

C. Make electrical installations complete and ready for service.

D. Install electrical equipment in accordance with directions furnished by manufacturer's instruction books.

E. Tighten nuts used in electrical equipment assembly with torque wrenches to torque values recommended by equipment manufacturers.

F. Drill holes in bolted steel structures and provide fastenings required for mounting or installing electrical equipment and materials.

G. Installation of electrical equipment includes:

1. Leveling and grouting channel bases.
2. Drilling holes, furnishing hardware, and assembling components to each other.
3. Furnishing materials for and making all connections correctly in accordance with final wiring diagrams.
4. Tagging wires and cables at each end.
5. Testing.

3.02 REPAIR

A. Repair damaged painted surfaces of equipment to match original finish.

3.03 CONTRACTOR FIELD QUALITY CONTROL AND TESTING

A. In accordance with requirements of FAR 52.246-12 Inspection of Construction, IEEE C2, and the various equipment Sections.

B. Field-made bolted power connections:

1. Flat, silver-plated with a resistance value of 10 micro-Ohms or less.

2. Resistance test equipment: Measure down to 0.1 micro-Ohms with an accuracy of +/- 0.3% or better.

3. If connections do not provide acceptable results, re-torque by loosening connections slightly and re-tightening to manufacturer's torque values.

3.04 FIELD QUALITY ASSURANCE

A. Government will inspect all equipment during construction. Acceptance of equipment will be made after equipment is operational.

B. Government will witness equipment field tests. Provide proof of Government witness on field test reports.

END OF SECTION

SECTION 26 05 04
ELECTRICAL DEMOLITION AND REMOVAL

PART 1 GENERAL

1.01 MEASUREMENT AND PAYMENT

A. Demolition and Removal:

1. Payment: Lump sum price offered in the Schedule.
   a. Remove equipment marked on Drawing 467-703-2612.
   b. Includes cost of removal and disposal of equipment and low-voltage cable.
   c. Includes handling, removing, disposing, salvaging, and reinstallation of existing electrical equipment.

1.02 SUBMITTALS

A. Submit the following in accordance with Section 01 33 00 – Submittals and Section 01 33 26 – Electrical Drawings and Data.

B. RSN 26 05 04-1, Electrical Outage and Demolition Plan:

1. Include following in removal plan for each piece of equipment:
   a. Sequence of removal.
   b. Equipment to be locked out.
   c. Equipment to be removed.
   d. Methods of dismantling equipment to remove material from building.

1.03 REGULATORY REQUIREMENTS

A. Handle and dispose of equipment in accordance with Local, State and Federal Requirements.

B. Remove equipment so as to avoid spreading existing coatings particles.

1.04 PROJECT CONDITIONS

A. See Section 51 00 10 for photographs of equipment and locations.

B. Existing cables sharing cable trays in ceiling and under raised floor: Determine location of utilities located in ceiling and under the floor to safeguard during construction.

C. Refer to Section 02 82 20 and 51 02 82 for location of detected asbestos in raised floor tile of work locations. Locations named in report are Panel Room, Dock, Air Conditioning Room, Battery Room and Communication Equipment Room. Locations

identified on drawing 467-D-1932 are identified by number: Panel Room (23), Dock (22), Air Conditioning Room (21), Battery Room (20) and Communication Equipment Room (15).

1.05 SEQUENCING

A. Before removal of existing equipment, the following shall be approved:

1. RSN 26 05 04-1, Electrical Demolition and Removal.
2. RSN 01 14 30-1, Interruption of Service Request.
3. RSN 26 20 10-1 Wyoming Area Office Temporary Power Plan.

1.06 MATERIALS AND EQUIPMENT

A. Provide equipment, materials, and containers required for disassembly and removal of equipment.

PART 2 PRODUCTS

2.01 None.

PART 3 EXECUTION

3.01 GENERAL

A. In accordance with Section 26 05 02 – Basic Electrical Materials and Methods.

3.02 PREPARATION

A. Request outage in accordance with Section 01 14 30 – Interruption of Service.

B. Follow instructions related to the Special Work Permit that will be issued by the COR to ensure that the equipment is safely de-energized, such as:

1. All sources of electrical and mechanical energy shall be defined and locked out in accordance with the facility Hazardous Energy Control Program.
2. Procedures to be implemented by the COR in conjunction with contractor.

C. When all hazardous electrical energy sources have been isolated and critical loads transferred to alternate power source, then removal work may begin.

D. The COR shall be notified before any existing equipment is removed from the site.

3.03 REMOVAL OF EXISTING ELECTRICAL EQUIPMENT

A. Disconnect and install temporary power equipment:

1. Reference Specification 26 20 10 – Temporary Power Equipment and ensure temporary power is supplied to critical equipment prior to transferring loads over.
2. Disconnect all components related to current UPS and feed to panelboard CPP1, CPP2 and PPAA.
3. Cables that are to be reused and terminated in the new equipment shall be protected from damage during construction activities.
4. If there are cables that will not be used in the new installation, disconnect at both ends, remove from conduits, and dispose.

B. Remove:

1. 30kVA UPS1 and UPS2 and associated equipment from UPS/Battery Room (20) on 467-D-1932:
   a. Battery charger BCA.
   b. Battery charger disconnect BCD.
   c. Transformer KBA.
   d. Transformer KBB.
   e. Transfer breaker box XA.
   f. Transfer breaker box XB.
   g. Automatic transfer switches ATS and ATS2.
   h. Enclosed circuit breakers MPN and MPG.
2. Panelboard located in Computer/Communications Room (15):
   a. Panelboard CPP1.
   b. Panelboard CPP2.
   c. Panelboard PPAA.
3. Transfer switch located in Distribution Panel Room (23):
   a. Manual Transfer Switch MTS.

C. General Work:

1. Disconnecting all associated cable and bus.
2. Disconnecting or dismantling electrical equipment cabinets and enclosures.
3. Removing equipment.
4. Disposing of equipment.

3.04 DISPOSAL

A. Dispose of removed equipment, cable, and materials in accordance with Section 01 74 00 - Cleaning and Waste Management.

3.05 REPAIR/RESTORATION

A. Repair floors and walls damaged during removal of equipment and materials to match surrounding surfaces.

B. Replace equipment, devices or surfaces destroyed or damaged as determined by COR during removal or handling of equipment.

END OF SECTION

SECTION 26 05 10
CONDUCTORS AND CABLES

PART 1 GENERAL

1.01 MEASUREMENT AND PAYMENT

A. Conductors and Cables:

1. Payment: Lump-sum price offered in Price Schedule

1.02 REFERENCE STANDARDS

A. ASTM International (ASTM)

1. ASTM B 8-11(2017) — Concentric-Lay-Stranded Copper Conductors, Hard, Medium-Hard, or Soft

B. National Fire Protection Association (NFPA)

1. NFPA 70-2023 — National Electrical Code (NEC)

C. Underwriters Laboratories, Inc. (UL)

1. UL 486B-2018 — Wire Connector

1.03 DESIGN REQUIREMENTS

A. Determine conductor sizes, except where shown or specified, in accordance with NFPA 70. In the event of conflict between design requirements and NFPA 70, the more stringent requirement applies.

1.04 SUBMITTALS

A. Submit the following in accordance with Section 01 33 00 - Submittals and Section 01 33 26 - Electrical Drawings and Data.

B. RSN 26 05 10-1, Approval Data:

1. Manufacturer's data.

C. RSN 26 05 10-2, Field Test Reports.

1.05 DEFINITIONS

A. Cable: Cable, cables, wire, or wires of one or more insulated conductors.

B. Power Cable: For power loads including receptacle outlets, alternating- and direct-current distribution circuits, and lighting circuits.

C. Multiconductor Control Cable: For control, metering, indication, annunciation, and relaying circuits; and circuits not identified as power circuits.

PART 2 PRODUCTS

2.01 CABLE

A. Manufactured no more than 24 months prior to Notice to Proceed.

B. 600-volt rated insulation unless specified otherwise.

C. Round, except for 2-conductor cable with parallel conductors.

D. Type:

1. Copper in accordance with ASTM 8, class B or C.
2. Stranded conductors, except for solid conductor building premises wire.
3. Single-conductor or multi-conductor, non-shielded type.
4. Labeled type TC when installed in cable tray.

E. Insulation Type:

1. Single-conductor cable: THHN/THWN or XHHW.
2. TFFN for 16 AWG.

F. Suitable For:

1. Installation in raceways.
2. Plenum rated in locations requiring such rating.
3. Installation in cable trays when required by specifications.

G. Single-conductor power cable in accordance with NEMA WC 70. Multiconductor cable in accordance with NEMA WC 57. Cable UL listed and labeled.

H. Provide multi-conductor power cable with integral ground conductor. Size ground conductor in accordance with NEMA WC 70.

I. AWG or kcmil designation.

J. Coverings or insulation: Suitable for installation in vertical position without injury to covering or deformation of insulation when supported in accordance with NFPA 70.

2.02 PHASE IDENTIFICATION

A. Power Cable Phase Conductors:

1. 120/208- or 240-volt. 3-phase: Black, red, blue. Colored phase tape may be used in lieu of colored insulation.
2. 277/480-volt, 3-phase: Black with brown, orange, yellow phase tape.

B. Neutral (Grounded) Conductors: In accordance with NFPA 70.

C. Equipment Grounding Conductors:

1. 6 AWG and smaller: Green insulation.
2. Larger than 6 AWG: Green tape at both ends and visible points including junction boxes.

2.03 ACCESSORIES

A. Single Conductor Markers:

1. Type: Self-laminating-vinyl type, machine printable sleeve.
2. Color: White with black text.
3. Text size: As large as practical but at least 7 point (0.06-inch).
4. 1-inch in length, minimum. Diameter suitable for installation on intended conductor.

B. Cable Tags:

1. Type: Non-conductive, heat resistant and non-corroding.
   a. Engraved Valve Tags, as manufactured by R&R Identification, www.rridentification.com, or Valve Tags, as manufactured by Brady, www.bradyid.com, or equal with the following essential characteristics:
      1) Minimum 2-ply laminate, engravable.
      2) Round shape with attachment hole suitable for tie wraps or similar.

PART 3 EXECUTION

3.01 INSTALLATION

A. When using cable ties, do not over tighten, to ensure tie does not cut conductor insulation or cable outer jacket. Do not use cable ties to support cables.

B. Block cable opening in sleeves under equipment or passing through blockouts, with silicone-foam, fire-retardant type material.

C. Cable Splicing:

1. Do not splice.

D. Cable Installed In Raceways:

1. Do not pull cable into conduit until they have been cleaned and are free from obstructions and sharp corners.
2. Draw a clean, dry, tight-fitting rag through conduit immediately before installing cable.
3. Install cable using gradual and uniform pulling stresses. Do not exceed allowable pulling tensions and sidewall pressures as recommended by cable manufacturer.
4. Install cable to prevent cuts or abrasions in insulation or protective covering and kinks in cable.
5. When a lubricant is needed as an aid to pulling, use only soapstone or other suitable lubricant that is not injurious to cable insulation.
6. When mechanical cable pulling equipment is used, use a tension meter release mechanism to ensure pulling tension remains below tensile strength of the cable.
7. Remove and replace cable damaged during installation.
8. Where conductors carrying alternating current are installed in ferrous metal enclosures or metal raceways, arrange to avoid heating surrounding ferrous metal by induction. Group phase conductors together.

E. Cable Installed in Vertical or Inclined Plane:

1. Install in accordance with NFPA 70.
2. Support with cable grips leaving slack spans between supports.
3. Clamp cable entering enclosures, junction boxes, or equipment with commercial cable clamps.

F. Wiring methods:

1. Do not combine alternating- and direct-current circuits.
2. Clamp cable entering equipment with commercial type cable clamps.
3. Leave sufficient length cable ends to make connections conveniently to equipment, fixtures, and devices.
4. Provide 5-conductor cable for each three-phase current and each potential transformer circuit.
5. Retain sufficient length of conductors in a current transformer cable length to reach farthest terminal used to select current transformer ratios.
6. Run both positive and negative leads of a direct-current circuit in same cable.

3.02 CABLE AND CONDUCTOR IDENTIFICATION

A. Conductor Markers:

1. Identify power conductors that are service conductors and panelboard feeders with colored insulation or colored phase tape in accordance with this section. An additional conductor marker is not required.

2. Provide a single-line marker on the load end of feeder and branch-circuit conductors that originate at panelboards. The marker to include designation of source equipment and circuit number.

3. Text to be machine or computer generated. Handwritten text is not acceptable.

4. A single line conductor marker will be acceptable provided the conductor designation is enclosed in parenthesis followed by the conductor destination.

B. Cable Tags:

1. Engrave tags with cable designations as shown on approved wiring and interconnection diagrams. Cable designation to be a single-line of text that includes cable number, originating equipment designation, and destination equipment designation. Develop cable designations when not shown. Examples of cable designations are:

   a. 1MPG-PPB – First cable from Enclosed Circuit Breaker MPG to Panelboard PPB.

   b. 3UPS-CPP2 – Third cable from UPS to Panelboard CPP2.

2. Securely attach cable tags to single-conductor power cables. Attach to cable with standard nylon self-locking tie wraps or cable ties. Use two wraps, one firmly around cable, second used to attach tag to tie wrap on cable so tag can dangle freely. Pull tag tie wrap so that loop is approximately ½-inch in diameter.

3.03 CONTRACTOR FIELD QUALITY TESTING

A. Perform testing after installation, but before connection to equipment.

B. Test cables in large groups to minimize number of testing sessions.

C. Notify COR, in writing, of date, time, and cables to be tested at least 5 working days before testing. Testing dates to be mutually agreeable between Contractor and COR.

D. Perform following tests:

1. Continuity test: Test continuity of each conductor prior to performing insulation resistance test.

2. Insulation resistance tests for power and control:

   a. Measure insulation resistance between each conductor and station ground with all other conductors in same cable or conduit grounded.

   b. Test voltage: 1,000 volts direct-current, minimum.

   c. Minimum acceptable insulation resistance: R in MΩ = (rated voltage in kV + 1) x 1000/length in ft.

3. Record following test data on test report for each conductor tested:

   a. Date of test.

b. Name or names of Contractor's personnel who performed test.

c. Name of Government inspector who witnessed test.

d. Conductor identification.

e. Megohms between conductor and ground.

f. Total length of conductor.

E. If any conductor fails continuity or insulation resistance testing, remove and replace cable and conductor.

END OF SECTION

SECTION 26 05 20
GROUNDING AND BONDING

PART 1 GENERAL

1.01 MEASUREMENT AND PAYMENT

A. Cost:

1. Include in prices offered in the price schedule for items requiring ground and bonding.

1.02 REFERENCE STANDARDS

A. ASTM International (ASTM)

1.	ASTM B 3-13(2018)	Soft or Annealed Copper Wire
2.	ASTM B 8-11(2017)	Concentric-Lay-Stranded Copper Conductors, Hard, Medium-Hard, or Soft
3.	ASTM B 228-11a(2016)	Concentric-Lay-Stranded Copper-Clad Steel Conductors

B. Institute of Electrical and Electronic Engineers (IEEE)

1.	IEEE 80-2013	Safety in AC Substation Grounding
2.	IEEE 81-2012	Measuring Earth Resistivity, Ground Impedance, and Earth Surface Potentials of a Ground System
3.	IEEE 142-2007	Grounding of Industrial and Commercial Power Systems
4.	IEEE 837-2014	Qualifying Permanent Connections Used in Substation Grounding
5.	IEEE C2-2017	National Electrical Safety Code (NESC)

C. National Fire Protection Association (NFPA)

1.	NFPA 70-2023	National Electric Code (NEC)

D. Underwriters Laboratories (UL)

1.	UL 467-2013	Grounding and Bonding Equipment

E. InterNational Electrical Testing Association (NETA)

1.	NETA ATS-2025	Standard for Acceptance Testing for Electrical Power Equipment & Systems

1.03 SUBMITTALS

A. Submit the following in accordance with Section 01 33 00 - Submittals and 01 33 26 - Electrical Drawings and Data.

B. RSN 26 05 20-1, Approval Data

1. Manufacturer's technical catalog data

C. RSN 26 05 20-2, Field Test Reports.

PART 2 PRODUCTS

2.01 MATERIALS

A. Ground Cable:

1. Annealed bare-copper cable:
   a. ASTM B 8, class B.
   b. Solid wires used in forming the copper cable: ASTM B 3.
2. Concentric stranded.
3. Sizes: As shown on drawings.
   a. Where not shown, minimum sizes:
      1) Ground risers and electrode conductors: 4/0 AWG.
      2) Equipment grounding conductors:
         a) Major equipment: Equal to size to electrode conductors.
         b) Minor equipment: No. 4 AWG

2.02 ACCESSORIES

A. Cable Connectors:

1. Bolted solderless or compression type.
2. Current-carrying capacity: Equal to cable with which they are used.
3. Connectors for ground cables, including fittings, lugs, bolts, nuts, and washers: Copper alloy containing not more than 4 percent zinc.
4. Bolted solderless or compression type connectors: IEEE 837.

PART 3 EXECUTION

3.01 INSTALLATION

A. Install in accordance with NFPA 70, IEEE C2, and this Section.

B. Connect equipment, metal conduit, steel structures, metal pull box covers, exposed metal surfaces and other miscellaneous metalwork to grounding system as indicated on Standard Drawings 40-D-4335 and 40-D-6182; and as shown on drawings.

C. Ground equipment and miscellaneous metalwork that is required to be grounded to grounding system.

1. Ground bus:

a. Connect equipment grounding conductors, grounding system risers, and building structural steel to ground bus.

D. Connections:

1. Make all ground connections between equipment and miscellaneous metalwork, and ground plates of grounding system whether or not such grounding connections are indicated on drawings.

2. Remove paint, enamel, scale, oil, grease, or other foreign nonconductive material from point of contact on metal surfaces before making ground connections.

3. Repair damaged or removed paint or galvanizing material on metal finishes.

3.02 CONTRACTOR FIELD QUALITY TESTING

A. Test resistance of grounding system:

1. Notify COR at least 24 hours in advance of time of test in order that test may be witnessed by COR.

2. Test in accordance with NETA ATS.

END OF SECTION

This page intentionally left blank.

SECTION 26 05 33
RACEWAYS AND BOXES

PART 1 GENERAL

1.01 MEASUREMENT AND PAYMENT

A. Raceways and Boxes:

1. Payment: Lump-sum price offered in Price Schedule.

1.02 REFERENCE STANDARDS

A. American National Standards Institute (ANSI)

1. ANSI C80.1-2020 — Electric Rigid Steel Conduit (ERSC)

A. National Electrical Manufacturers Association (NEMA)

2. NEMA FB 1 - 2014 — Fittings, Cast Metal Boxes, And Conduit Bodies for Conduit, Electrical Metallic Tubing and Cable
3. NEMA C80.3 — Electric Metallic Tubing – Steel (EMT-S)

B. Underwriters Laboratories (UL)

1. UL 797 - 2007 — UL Standard for Safety Electrical Metallic Tubing - Steel

C. National Fire Protection Association (NFPA)

1. NFPA 70-2023 — National Electrical Code (NEC)

1.03 SITE CONDITIONS

A. Floor tile and mastic may contain asbestos. Do not disturb without written approval from the COR. See Section 51 02 82 - Asbestos Building Inspection.

1.04 SYSTEM DESCRIPTION

B. Design Requirements:

1. Determine routing of exposed conduit.

1.05 SUBMITTALS

A. Submit the following in accordance with Section 01 33 00 - Submittals and 01 33 26 - Electrical Drawings and Data.

B. RSN 26 05 33-1, Approval Data:

1. Manufacturer's data.

C. RSN 26 05 33-2, New Conduit Routing Plan

PART 2 PRODUCTS

2.01 CONDUIT

A. General:

1. UL listed.
2. Sizes as shown on drawings.
3. Rate for intended purposes or labeled by nationally recognized testing laboratory (NRTL) accredited by Federal Occupational Safety and Health Administration (OSHA) when applicable.

B. Electrical Metallic Tubing (EMT):

1. Zinc-coated and in accordance with ANSI C80.3.

2.02 CONDUIT ACCESSORIES

A. UL Listed.

B. Conform to NEMA FB 1 as applicable.

C. Steel materials and hardware: Galvanized.

D. Provide fittings required to complete electrical conduit systems. Includes, but not limited to, caps, connectors, couplings (excluding expansion and expansion-deflection couplings), nipples, reducers, elbows, pipe plugs, locknuts, bondnuts, bushings, seals (excluding wall penetration seals), and any other fittings.

E. Provide devices required to complete electrical conduit systems and to fasten, clamp, attach, and support each conduit in place. Complete with bolts, washers, and nuts.

F. Conduit Sealing Bushings:

1. Non-Toxic.
2. Non-shrinking.
3. Fire-retardant type.
4. Seals against gas, and vapor seepage.

G. Conduit Wall Penetration Seals:

1. Elastomeric material to prevent liquid and gas seepage.
2. Dust tight.

3. Fire retardant.

H. Steel Outlet, Junction, and Pull Boxes: Pressed galvanized steel, minimum of four inches, octagonal or square, with galvanized cover or extension ring as required.

I. Sealing Materials:

1. General use:

a. Non-toxic.

b. Non-shrinking.

c. Fire retardant type.

d. Seal ends of conduit against liquid, gas, and vapor seepage.

J. Conduit Body

1. Metallic type appropriate to conduit type and size.

2. Furnish with covers.

3. Install with cover face remaining accessible.

PART 3 EXECUTION

3.01 INSTALLATION

A. In accordance with Section 26 05 02 – Basic Electrical Methods and Materials.

B. Layout and Procedures:

1. Determine routing of exposed conduit.

2. Ensure that conduit runs and bends are free from kinks, indentations, or flattened surfaces.

C. Preparation:

1. Remove burrs and sharp corners at ends of metal conduit.

D. Install conduit with necessary fittings and supports.

1. Support conduit as indicated on Standard Drawing 40-D-7094.

2. Tighten conduit joints securely to ensure electrical continuity and to prevent entrance of moisture or foreign material.

3. Provide bushings or Chase-type nipples on ends of conduit to protect insulated conductors from abrasion.

4. Use locknuts and bondnuts to provide tight ground connections between conduit and boxes, panelboards, and cabinets.

5. Tighten conduit to electrical equipment mounted on tubular metal structures securely and support rigidly in place by conduit clamps, hex head nuts, and threaded 3/8-inch stud fasteners driven by powder-actuated tools.

E. Bends:

1. Install smooth, gradual bends to permit pulling insulated conductors without undue stress or damage to conductors or conduit.
2. Bend conduit cold to prevent damage to protective coating.

F. Exposed conduit runs:

1. Straight and parallel with each other and with centerlines of room or structure.
2. Support conduit rigidly from wall or ceiling within 3 feet of each outlet box, junction box, cabinet, or fitting; and at intervals of not more than 5 feet.
3. Installation includes, where required, drilling holes in bottom, side, or top of enclosures or plates of other electrical equipment.
4. Tighten conduit securely.
5. Support conduit rigidly in place.

G. Expansion Couplings: Use where exposed conduits cross expansion or contraction joints. Install expansion couplings and expansion-deflection couplings in accordance with manufacturer’s instructions.

H. Seals/Sealing:

1. Seal ends of conduits that terminate at boxes, panelboards, or cabinets with sealing material or sealing bushings to prevent air circulation through conduits into boxes, panelboards, or cabinets. Install seals in accordance with manufacturer's instructions.

END OF SECTION

SECTION 26 20 10
TEMPORARY POWER EQUIPMENT

PART 1 GENERAL

1.01 MEASUREMENT AND PAYMENT

A. Temporary Power Equipment:

1. Payment: Lump-sum price offered in Price Schedule.

1.02 REFERENCE STANDARDS

A. National Electrical Manufacturers Association (NEMA)

1. NEMA 10250-2024 Enclosures for Electrical Equipment

B. National Fire Protection Association (NFPA)

1. NFPA 70-2023 National Electrical Code (NEC)

1.03 SITE CONDITIONS

A. Floor tile and mastic may contain asbestos. Do not disturb without written approval from the COR. See Section 51 02 82 - Asbestos Building Inspection.

1.04 SUBMITTALS

A. Submit the following in accordance with Section 01 33 00 – Submittals and Section 01 33 26 – Electrical Drawings and Data.

B. RSN 26 20 10-1, Temporary Power Installation Plan:

1. Schedule.
2. Sequencing plan including methods to connect to existing facilities.
3. Plan view of temporary conduit/cable routing and equipment locations. Include height above finished floor for overhead conduit and cables.
4. Ratings and physical sizes of equipment.
5. Manufacturer data sheets:
   a. Power distribution board.
   b. Low-voltage power conductors.
   c. Conduit.
   d. Pull boxes.

C. RSN 26 20 10-2, Temporary Power Removal Plan:

1. Schedule.
2. Sequencing of removal.
3. Equipment to be removed.

1.05 PROJECT CONDITIONS

A. Provide temporary power equipment to power the following critical station service loads:

1. 208/120V loads in CPP1.
   a. Bus: 100A, 3PH, 4-Wire.
2. 208/120V loads in CPP2.
   a. Bus: 100A, 3PH, 4-Wire.
3. 480V loads in MPA.
   a. Bus: 300A, 3PH, 4-Wire.
4. Battery charger BCA

B. Contractor may propose an alternate temporary power solution. Obtain Government approval of an alternate temporary power plan.

PART 2 PRODUCTS

2.01 TEMPORARY POWER TRANSFORMER

A. Dry-type transformer sized no smaller than 45kVA, minimum, 480:208/120V, 3PH.

2.02 TEMPORARY POWER DISTRIBUTION BOARD

A. NEMA 1 with hinged door.

B. Ratings:

1. 480V Panel Ratings:
   a. Maximum voltage: 508V, rms (System voltage: 480V).
   b. Power frequency: 60 Hz.
   c. Bus: 500A, minimum.
   d. Main breaker: Adjustable trip LSI with trip rating: As shown on single line diagram 467-D-60005.
   e. Feeder breakers: Thermal magnetic with trip rating: As shown on single line diagram 467-D-60005.
   f. Withstand/interrupting current rating for bussing and breakers:
      1) Short time current: 30,000 A.

2) Short-circuit current rating at 480V: 30,000 A.

2. 208V Panel Ratings

a. Maximum voltage: 294V, rms (System voltage: 208/120V).

b. Power frequency: 60 Hz.

c. Bus: 200A, minimum.

d. Main Breaker: Thermal magnetic with trip rating: As shown on single line diagram 467-D-60005.

e. Feeder breakers: Thermal magnetic with trip rating: As shown on single line diagram 467-D-60005.

f. Withstand/interrupting current rating for bussing and breakers:

1) Short time current: 22,000 A

2.03 TEMPORARY POWER CONDUCTORS

A. Meet or exceed requirements listed in Section 26 05 10 – Conductors and Cables.

B. Minimum size shown on single line diagram 467-D-60005.

PART 3 EXECUTION

3.01 GENERAL

A. Do not remove or install temporary power equipment, 480V cables, conduit, and associated items until RSN 26 20 10-1, Temporary Power Installation Plan, is approved.

B. Comply with Section 01 14 30 – Interruption of Service.

C. Provide temporary lighting for work area and egress when lighting circuits are de-energized.

D. Government may energize the engine generator during station service de-energization.

3.02 INSTALLATION

A. Perform work in accordance with the approved sequencing plan provided in RSN 26 20 10-1 Temporary Power Plan to reduce the downtime of the critical loads.

B. Install conduits, supports, and boxes required per NFPA 70.

C. Move existing meter CTs and connections to temporary service entrance cables and connections.

3.03 REMOVAL

A. Remove and dispose of items associated with temporary power.

B. Comply with Section 01 74 00 – Cleaning and Waste Management.

END OF SECTION

SECTION 26 21 14
SAFETY DISCONNECT SWITCH

PART 1 GENERAL

1.01 COST

A. Safety Disconnect Switch:

1. Payment: Lump sum price offered in the Price Schedule.

1.02 REFERENCES

A. National Electrical Manufacturers Association (NEMA)

1. NEMA BS 31047 - 2013 (R2023) Heavy Duty Enclosed and Dead-Front Switches (600 Volts Maximum)

B. National Fire Protection Association, Inc. (NFPA)

1. NFPA 70 - 2023 National Electrical Code (NEC)®

C. Underwriters Labs (UL)

1. UL 98 - 2016 UL Standard for Safety and Dead-Front Switches

D. InterNational Electrical Testing Association (NETA)

1. NETA ATS-2025 Standard for Acceptance Testing for Electrical Power Equipment & Systems

1.03 SUBMITTALS

A. Submit the following in accordance with Sections 01 33 00- Submittals and 01 33 26 - Electrical Drawings and Data.

B. RSN 26 21 14-1 - Approval Data: Manufacturer's data for items listed in Part 2 Products.

PART 2 PRODUCTS

2.01 MANUAL DISCONNECT SWITCH

A. Type: Heavy-duty, double pole, non-fusible.

B. Enclosure: NEMA 1.

C. Voltage Rating: 600 VDC.

D. Current Rating: 300A.

E. Switch Mechanism/Handle.

1. Switch Operating Mechanism: Made from steel, with no plastic parts.
2. Switch Operating handle:
   a. Integral part of the switch enclosure. Use of cover as disconnect device is not acceptable.
   b. Made from steel, with no plastic parts other than handle grip.
   c. Have provisions for padlocking in the OFF position.

F. Switch Cover Interlock:

1. Prevent unintentional opening of switch cover when switch is ON.
2. Prevent closing switch with switch cover open.
3. Have externally operated interlock override. Override shall not permanently disable interlock mechanism.

G. Coatings: Manufacturer's standard coating for indoor use.

H. Underwriters' Laboratories, Inc. (UL) listed.

PART 3 EXECUTION

3.01 INSTALLATION

A. Disconnect battery cables from battery and verify cables are deenergized to ensure safe work.

B. Pull conductors back to permit modification work.

C. Remove conduit to permit Safety Disconnect Switch installation at eye level.

D. Install switch at eye level on the outside of the battery containment and in line with conduit.

E. Reroute conduit to safety disconnect switch with conductors landing on load side.

F. Install new conduit to safety disconnect switch with new conductors to Line side of safety disconnect switch and route conduit and conductors to where the conduit previously entered battery containment structure.

G. Install grounding and bonding connections in accordance with Section 26 05 02 – Basic Electrical Materials and Methods and Section 26 05 20 Grounding and Bonding.

3.02 TESTING

A. Post installation testing in accordance with NETA ATS.

END OF SECTION

SECTION 26 24 24
DISTRIBUTION PANELBOARDS

PART 1 GENERAL

1.01 MEASUREMENT AND PAYMENT

A. Distribution Panelboards:

1. Payment: Lump-sum price offered in the schedule.

1.02 REFERENCE STANDARDS

A. National Electrical Manufacturers Association (NEMA)

1. NEMA 10250-2024 Enclosures for Electrical Equipment

B. Federal Specifications (FS)

1. FS W-C-375D Circuit Breakers, Molded Case; Branch Circuit and Service

C. Electrical Institute of Electrical and Electronics Engineers (IEEE)

1. IEEE C37.13-2024 Low-Voltage AC Power Circuit Breakers Used in Enclosures

D. InterNational Electrical Testing Association (NETA)

1. NETA ATS-2025 Standard for Acceptance Testing for Electrical Power Equipment & Systems

E. National Electrical Manufacturers Association (NEMA)

1. NEMA AB 3-2013 Molded Case Circuit Breakers and Their Application
2. NEMA PB 1-2011 Panelboards

F. National Fire Protection Association (NFPA)

1. NFPA 70-2023 National Electrical Code (NEC)

G. Underwriters Laboratories, Inc. (UL)

1. UL 50-2015 Enclosures for Electrical Equipment
2. UL 67-2018 Panelboards
3. UL 489-2016 Molded-Case Circuit Breakers, Molded-Case Switches, and Circuit-Breaker Enclosures

1.03 SITE CONDITIONS

A. Floor tile and mastic may contain asbestos. Do not disturb without written approval from the COR. See Section 51 02 82 - Asbestos Building Inspection.

1.04 SUBMITTALS

A. Submit the following in accordance with Section 01 33 00 - Submittals and Section 01 33 26 - Electrical Drawings and Data.

B. RSN 26 24 24-1, Approval Drawings and Data:

1. Equipment layout drawings, wiring diagrams, manufacturer's data, bills of material for each device or component of equipment, and circuit directory for each board.

C. RSN 26 24 24-2, Factory Test Report.

D. RSN 26 24 24-3, Operation and Maintenance Instruction Books.

E. RSN 26 24 24-4, Field Test Reports

PART 2 PRODUCTS

2.01 DISTRIBUTION PANELBOARDS

A. Type 1 in accordance with NEMA 250 indoor with hinged door.

B. Suitable for use with 3-phase, 4-wire, 208V/120-volt, alternating-current power supply, and solid-neutral bus.

C. Main Lug.

D. Branch Circuits: As indicated on drawings.

E. Bus Material: Copper.

F. Mounting: Wall.

G. Conform to IEEE C37.13, C37.14, and C37.20.1; NEMA AB 3 and PB 1; UL 50, 67, and 489; NEC; and FS W-C-375.

2.02 NAMEPLATES

A. As indicated on Standard Drawing No. 40-D-6234.

B. Engraving: As shown on drawings.

2.03 MAIN BUS

A. Rating: 100 amperes, minimum.

B. Copper, bolted type bars.

C. Main and Branch Circuit Connections: Unless silver plated, use copper based on 1,000-ampere-per-square-inch current density and contact surfaces with not more than 200 amperes per square inch.

D. Equip screws and bolts used for making copper connections with lock washers to prevent loosening. Do not use riveted bus connections.

2.04 CIRCUIT BREAKERS

A. Molded-case type.

B. Thermal-magnetic type with inverse-time trip characteristics on overload and instantaneous trip on short circuit.

C. Voltage: As shown on drawings.

D. Interrupting Rating: As shown on drawings.

E. Quick-make and quick-break toggle mechanisms.

F. Trip-free operating handle.

G. Single operating handle. Do not use handle ties on multiple-pole circuit breakers.

H. Mount circuit breakers handles to be operable from front of boards.

I. Assemble boards so that individual breakers can be removed or added without disturbing adjacent units, without loosening or removing supplemental insulation supplied to meet requirements of UL, and without additional machining, drilling, or tapping.

J. Assemble boards with molded-case circuit breakers individually mounted on fixed framework behind easily removable covers.

K. Padlock attachments for locking breakers in OFF position.

L. In accordance with FS W-C-375 and NEMA AB-3 for molded-case circuit breakers.

M. Equip multiple-pole breakers with common trips so an overload on one pole will automatically cause all poles of breaker to open.

N. Equip with solderless-type connectors on load side of breakers for conductors No. 8 AWG and smaller. Furnish pressure-wire connectors on load side of breakers for conductors larger than No. 8 AWG.

O. Spare breakers: As indicated on drawings.

P. Number of Poles: As indicated on drawings.

2.05 SOLDERLESS, BOLTED-TYPE LUGS OR TERMINALS

A. Provide lugs or terminals suitable for copper conductors on breakers for feeder and branch circuit cables, and on bus for supply cables. Size lugs or terminals in accordance with cable sizes indicated on drawings.

B. Provide neutral buses with sufficient solderless, bolted-type lugs or terminals to accommodate each single-pole branch circuit breaker, each future breaker, and neutral leads.

C. Provide solderless, bolted-type copper lugs or terminals at rear base of boards for connecting boards to ground system. Connect lugs or terminals to ground system by No. 6 AWG copper conductor.

2.06 CONNECTORS BETWEEN BREAKER TERMINALS AND BUSES

A. Copper bars designed to prevent excessive stress on bus or breaker during expansion due to temperature changes.

2.07 GROUND BUS

A. Copper.

B. Length: Width of enclosure.

C. Install at bottom of enclosure.

D. Bond mechanically and electrically to enclosure.

E. Drill and tap every inch for 10-32 screws. Install a 10-32 screw in each tapped hole.

2.08 ENCLOSURE

A. Construct enclosures with a of sheet steel not lighter than No. 20 United States Standard gauge.

B. Welded joints.

C. Galvanize after fabrication.

D. Finish: Manufacturer’s standard finish.

2.09 FABRICATION

A. Make equipment, removable covers, wiring, and wiring gutters accessible from fronts of the boards for operation, maintenance, removal, and replacement so boards are capable of being permanently mounted with rear against wall.

B. Equip ventilation openings with grilles or screens having dust filters.

C. Dimensions: Verify fitment of enclosure for panels to be replaced.

D. Provide gutter space on all sides of all boards in accordance with NFPA 70.

E. Provide boards with easily removable or hinged front panels so incoming cables may be easily connected or disconnected and inspected.

F. Provide access doors for each board.

G. Equip each door with latches, and concealed hinges to allow doors to open 105 degrees, minimum, from fully closed position

H. Circuit Directory:

1. Prepare circuit directory for each board, indicating "as-built" conditions.
2. Include board designation, breaker numbers and descriptions of connected loads indicated in their relative physical location.
3. Use machine lettering for directory entries. Do not provide pencil or hand written directory entries.
4. Mount directory in transparent plastic front on inside surface of access doors for each board.
5. Fabricate circuit directory frame such that directory need not be folded when placed in frame, and such that all information on directory is clearly visible and legible.

I. Fabricate frames and enclosures of sheet steel with sufficient weight and strength to ensure permanent rigidity and alignment.

J. Hide butt joints on outside surfaces.

K. Hide holes or fasteners be from front of boards for rear-of- board-mounted equipment.

L. Provide boards with manufacturer's standard base build provided other requirements of this Section are fulfilled.

M. Support bus bars by structural frames. Do not depend on breakers for support.

N. Back pan:

1. Provide as foundation for mounting bus and breakers.

2. Construct rigidly to ensure against damage during shipment and installation.
3. Provide reinforcement on back pan consisting either of flanging back pan entire length of pan,or securely fastening angle iron to both sides of a flat back pan.
4. Do not use non-reinforced back pans of ordinary flat sheet steel.

2.10 CONTRACTOR SOURCE QUALITY TESTING

A. Dielectric test in factory in compliance with NEMA PB1, as applicable.

B. Test circuits before shipment to demonstrate correctness of completed wiring connections and proper functioning of devices.

PART 3 EXECUTION

3.01 INSTALLATION

A. Cables entry into enclosure: Use existing entry ways.

B. Provide anchoring, supporting, and mounting materials as required.

C. Install ground cable between panelboard enclosure and ground electrode conductor located under raised floor.

3.02 TESTING

A. Post installation testing in accordance with NETA ATS.

END OF SECTION

SECTION 26 28 30
ENCLOSED CIRCUIT BREAKERS

PART 1 GENERAL

1.01 MEASUREMENT AND PAYMENT

A. Enclosed Circuit Breakers:

1. Payment: Lump sum price offered in the Schedule.

1.02 REFERENCE STANDARDS

A. National Electrical Manufacturers Association (NEMA)

1. NEMA 10250-2024 — Enclosures for Electrical Equipment (1000 Volts Maximum)

B. National Fire Protection Association (NFPA)

1. NFPA 70-2023 — National Electric Code (NEC)

C. Underwriters Laboratory (UL)

1. UL-489-2016 — Molded-Case Circuit Breakers, Molded Case Switches and Circuit-Breaker Enclosures

D. InterNational Electrical Testing Association (NETA)

1. NETA ATS-2025 — Standard for Acceptance Testing for Electrical Power Equipment & Systems

1.03 SITE CONDITIONS

A. Floor tile and mastic may contain asbestos. Do not disturb without written approval from the COR. See Section 51 02 82 - Asbestos Building Inspection.

1.04 DESIGN REQUIREMENTS

A. Circuit Breaker Sizes: As shown on drawing, 467-D-60006.

1.05 SUBMITTALS

A. Submit the following in accordance with Section 01 33 00 - Submittals and Section 01 33 26 - Electrical Drawings and Data.

B. RSN 26 28 30-1, Approval Drawings and Data:

1. Equipment layout drawings, wiring diagrams, manufacturer's data, bills of material for each device or component of equipment.

C. RSN 26 28 30-2, Factory Test Report.

D. RSN 26 28 30-3, Operation and Maintenance Instruction Books.

E. RSN 26 28 30-4, Field Test Reports

1.06 DELIVERY, STORAGE, AND HANDLING

A. Handle in accordance with manufacturer’s recommendations.

B. Store in clean, dry, secure space. Protect from spills or other moisture by using appropriate coverings.

PART 2 PRODUCTS

2.01 ENCLOSURE

A. Type 1 in accordance with NEMA 250 indoor with hinged door and pad-lockable.

B. Safety interlock compatible.

C. Mounting: Wall-mounted.

D. UL listed

E. Nameplates:

1. As indicated on Standard Drawing No. 40-D-6234.
2. Engraving: As indicated on drawings.

F. Provide with copper ground lug suitable for 1/0 AWG ground cable.

G. Provide with copper neutral bus suitable for 1/0 AWG cable.

2.02 CIRCUIT BREAKERS

A. Molded-case type.

B. Thermal-magnetic type with inverse-time trip characteristics on overload and instantaneous trip on short circuit.

C. Voltage: 480 volts, 3 phase, 60 hertz.

D. Ratings: As indicated on drawings.

E. MPG Interrupting Rating: 5.9kA symmetrical RMS amperes, minimum.

F. MPN Interrupting Rating: 8.6kA symmetrical RMS amperes, minimum.

G. Quick-make and quick-break toggle mechanisms.

H. Operating Handle:

1. Trip-free.
2. Single operating handle. Handle ties on multiple-pole circuit breakers are not acceptable.
3. Padlockable in OFF position.

I. UL Listed and conform to UL 489.

2.03 FINISHES

A. Enclosure: Manufacturer's standard.

PART 3 EXECUTION

3.01 INSTALLATION

A. Install in location where previous enclosed circuit breakers were removed.

B. Install in accordance with manufacturer's instructions and NEMA 250 and UL 489.

C. Ground and bond in accordance with NFPA 70 and Section 26 05 20 – Grounding and Bonding.

D. Make conduit and cable connections.

3.02 TESTING

A. Post installation testing in accordance with NETA ATS.

END OF SECTION

This page intentionally left blank.

SECTION 26 30 10
AUTOMATIC TRANSFER SWITCH

PART 1 GENERAL

1.01 MEASUREMENT AND PAYMENT

A. Automatic Transfer Switch:

1. Payment: Lump-sum price offered in Price Schedule.

1.02 REFERENCE STANDARDS

A. National Electrical Testing Association (NETA)

1. NETA ATS-2025 — Acceptance Testing Specifications for Electrical Power Equipment and Systems

B. National Electrical Manufacturer's Association (NEMA)

1. NEMA 10250-2024 — Enclosures for Electrical Equipment (1000 Volts Maximum)

C. National Fire Protection Association (NFPA)

1. NFPA 70-2023 — National Electric Code (NEC)

1.03 SITE CONDITIONS

A. Floor tile and mastic may contain asbestos. Do not disturb without written approval from the COR. See Section 51 02 82 - Asbestos Building Inspection.

1.04 DESIGN REQUIREMENTS

A. Transfer switch shall be automatic so that when normal service power has been interrupted, the engine-generator will start via existing signal wire and contact, HVAC system will disable, and when the generator has attained the rated voltage and frequency the load will be transferred.

1.05 SUBMITTALS

A. Submit the following in accordance with Section 01 33 00 - Submittals and Section 01 33 26 - Electrical Drawings and Data.

B. RSN 26 30 10-1, Approval Data:

1. Equipment layout drawings, wiring diagrams, manufacturer's data and bill of material.

C. RSN 26 30 10-2, Factory Test Report.

D. RSN 26 30 10-3, Operation and Maintenance Instruction Books.

E. RSN 26 30 10-4, Field Test Reports

1.06 DELIVERY, STORAGE, AND HANDLING

A. Protect equipment from corrosion, deformation, and other types of damage.

PART 2 PRODUCTS

2.01 AUTOMATIC TRANSFER SWITCH

A. Suitable for use with 3-phase, 4-wire, 480-volt, alternating-current power supply, solid-neutral bus and service entrance rated.

B. Main Breaker Thermal Rating: 300 amperes.

C. Interrupting Rating: 10.5kA symmetrical RMS amperes, minimum.

D. Capable of accepting four 350 MCM per phase supplying 3 loads.

E. Wall mounted.

F. Solid-state control circuitry.

G. Programmable input/output controller with auxiliary contacts: one normally open and two normally closed.

H. Exercise Clock: Solid-state, fully programmable.

I. Enclosure: In accordance with NEMA 250

1. Type 1.

J. Provide switch with mechanical and electrical safety interlocks:

1. Source: Prevent simultaneous connection of both normal and emergency power sources.
2. Manual Operation: Prevent manual operation unless switch in is de-energized state.
3. Enclosure Access: Prevent access to enclosure during normal operation.
4. Control Circuit: Prevent unintended operation during testing or maintenance by disabling automatic control circuits when in test or maintenance mode.

K. Adjustable Time Delays:

1. Start Delay: Prevents generator set from start-up during momentary utility disturbance.

2. Transfer Delay: Allows the generator set to reach a stable running speed before transfer and open contacts to HVACs NCP1 and NCP2 thermostat.
3. Re-Transfer Delay: Allows the utility to stabilize before load re-transfer, thereby preventing multiple attempts to transfer as a result of an unstable utility source and close contacts to HVACs NCP1 and NCP2 thermostat.
4. Stop Delay: Maintains the generator set for immediate reconnection if the normal source fails shortly after re-transfer, and allows gradual generator set cool-down by running with no load before shutdown,

L. Furnish inline normally closed contact for HVACs disable.
1. Verify thermostat voltage and contactor compatibility.
2. Match contactor connections to wire count of thermostat.

M. Furnish current transformers for utility meter.
1. CT Rating: 300:5.
2. Accuracy class: 0.3 B0.6.
3. Insulation: 600V.
4. Frequency: 60 Hz.

PART 3 EXECUTION

3.01 INSTALLATION

A. Install automatic transfer switch in accordance with manufacturer's recommendations and NFPA 70.

B. Mount the transfer switch on the wall and make all necessary connections.

C. Provide qualified personnel to wire contactor between thermostat and HVAC NCP1 and NCP2.

D. Provide qualified personnel to program ATS programmable input/output controller to operate contacts disabling HVAC NCP1 and NCP2 when on generator power.

E. Bond the switch to existing ground line located under raised floor in accordance with NFPA 70 and Section 26 05 26 – Grounding and Bonding.

F. Attach schematic wiring diagrams to inside of door panel

3.02 CONTRACTOR FIELD QUALITY TESTING

A. Test in accordance with NETA ATS.
1. Notify COR at least 24 hours in advance of time of test in order that test may be witnessed by COR.

B. Verify when ATS is on generator power that contacts disable HVAC NCP1 and NCP2.

END OF SECTION

SECTION 26 33 53
STATIC UNINTERRUPTIBLE POWER SUPPLY

PART 1 GENERAL

1.01 MEASUREMENT AND PAYMENT

A. Static Uninterruptible Power Supply:

1. Payment: Lump sum price offered in the Price Schedule.

1.02 REFERENCE STANDARDS

A. ASTM International (ASTM)

1.	ASTM D638-2022	Standard Test Method for Tensile Properties of Plastics
2.	ASTM D790-2017	Standard Test Methods for Flexural Properties of Unreinforced and Reinforced Plastics and Electrical Insulating Materials

B. International Electrotechnical Commission (IEC)

1.	IEC 62040-3-2021	Uninterruptible Power Systems (UPS) Part 3: Method of Specifying the performance and test requirements.

C. Institute of Electrical and Electronics Engineers (IEEE)

1.	IEEE 450-2020	Recommended Practice for Maintenance, Testing, and Replacement of Vented Lead-Acid Batteries for Stationary Applications
2.	IEEE C57.110-2018	Recommended Practice for Establishing Liquid Immersed and Dry-Type Power and Distribution Transformer Capability When Supplying Nonsinusoidal Load Currents
3.	IEEE C62.41.1-2008	Guide on the Surge Environment in Low-Voltage AC Power Circuits.
4.	IEEE C62.41.2-2002	Recommended Practice on Characterization of Surges in Low-Voltage (1000V and Less) AC Power Circuits
5.	IEEE C62.45-2008	Recommended Practice on Surge Testing for Equipment Connected to Low-Voltage (1000V and Less) AC Power Circuits

6. IEEE C62.62-2018 — Recommended Practice on Surge Testing for Equipment Connected to Low Voltage AC Power Circuits

D. National Electrical Manufacturers Association (NEMA)

1. NEMA 10250-2024 — Enclosures for Electrical Equipment (1000 Volts Maximum)
2. NEMA PE 1-2012 — Uninterruptible Power Systems (UPS) Specification and Performance Verification

E. InterNational Electrical Testing Associated (NETA)

1. NETA ATS-2025 — Standard for Acceptance Testing for Electrical Power Equipment & Systems

F. National Fire Protection Association, Inc. (NFPA)

1. NFPA 70-2023 — National Electrical Code (NEC), Article 285

G. Underwriters Laboratories, Inc. (UL)

1. UL 1283-2017 — Electromagnetic Interference Filters
2. UL 1778-1994 — Standard for Safety Uninterruptible Power Systems
3. UL 1449-2022 — UL Standard for Safety Surge Protection Devices

1.03 SITE CONDITIONS

A. Floor tile and mastic may contain asbestos. Do not disturb without written approval from the COR. See Section 51 02 82 - Asbestos Building Inspection.

1.04 SUBMITTALS

A. Submit the following in accordance with Section 01 33 00 - Submittals and Section 01 33 26 - Electrical Drawings and Data.

B. RSN 26 33 53-1, Approval Drawings and Data:

1. Single-line diagrams.
2. Provide schematic diagrams which are specific to the installation. Do not use “typical” schematic diagrams to cover multiple installations or pieces of equipment.
3. Schematic diagram to show all portions of the actual circuitry, regardless of whether the circuitry is located within the enclosure or at another location.
4. UPS layout drawings including elevation, section views, and overall dimensions.
5. Provide wiring diagrams for the installation.

a. Connection terminals identified detailing prewired interconnections between components.

6. Bill of Materials.

7. Provide nameplate list for all nameplates.

8. Certification by the manufacturer that the UPS conforms to the requirements of contract specifications.

9. Job Hazard Analysis for Government factory inspection per Specification 01 33 36 – Electrical Drawings and Data.

C. RSN 26 33 53-2, Installation Plan:

1. Provide installation plan accompanied with drawings demonstrating:

a. Installation details.

b. Proposed location layout and arrangement.

c. Indicate adequate clearance for operation and maintenance.

d. List of field tests that will be performed post installation.

D. RSN 26 33 53-3, Factory Test Reports.

E. RSN 26 33 53-4, Operations and Maintenance Instruction Books:

1. Include approved data sheets for all products.

2. Include instruction manuals for all products.

3. Include approved final schematics, wiring diagrams, and layout drawings.

4. Include factory and field test report.

F. RSN 26 33 53-5, Field Test Reports:

1. Certification by the contractor that the UPS has been correctly installed.

1.05 DEFINITIONS

A. COR: Contracting Officer Representative.

B. I/O: Input/Output.

C. PLC: Programmable Logic Controller.

D. SCADA: Supervisory Control and Data Acquisition.

E. UPS: Uninterruptible Power Systems.

F. VAC: Volts Alternating Current.

G. VPR: Voltage Protection Rating.

1.06 SYSTEM DESCRIPTION

A. The facility will be furnished with two three phase, continuous duty, online, double conversion, static solid-state Uninterruptible Power Supplies. The UPS shall operate in conjunction with the existing 480 VAC distribution system to provide power for operating the SCADA system and critical loads.

B. The UPS will serve as a primary power source to operate the SCADA system, control circuits and devices. In the event of AC power source loss or distribution equipment failure, the UPS will provide continuous power to SCADA systems from battery until standby generator is connected or utility power is restored.

1.07 DESIGN REQUIREMENTS

A. Environmental Conditions:

1. The UPS system shall be capable of withstanding the following environmental conditions without electrical or mechanical damage or degradation of its operating characteristics:

   a. Properly derated for 5,300 feet above sea level.

   b. Operating temperature: 0 to 104 degrees Fahrenheit.

   c. Relative humidity: 0 to 95 percent, non-condensing.

B. Sound Levels full rated load: 75dB, maximum.

C. Provide continuous regulated AC power to its output terminals, three phase, solid state, and online double conversion reverse transfer static UPS system.

D. In accordance with UL 1778 and 47 CFR part 15.

E. Provide the following minimum system components:

1. UPS module consisting of rectifiers, inverters, battery chargers and associated control interface.
2. Battery management system.
3. Protection devices.
4. Bypass switch.
5. Means of control and remote monitoring.
6. Means of disconnecting from critical load.
7. Alarms and Status indication.
8. Accessories.

F. Redundant System as indicated on drawings.

1. Parallel Multi-Module capable of supplying power to the total load with bypass capability.
    a. Operated separately through a tie breaker.
    b. Separate UPS module with a split bus configuration each capable of supporting total load.

G. Modes of Operation:
1. Normal mode: rectify AC input power to DC for battery charging. UPS shall continuously invert power to supply total load.
    a. Regulate voltage and frequency.
    b. Charge internal batteries while simultaneously derive power from the new distribution system.
2. Battery mode: In the event of AC input power loss, the inverter shall supply AC power to critical loads from the batteries without interruption.
    a. Provide output status alarm indication to the automation control system.
    b. Design for fail-safe operation of the batteries.
3. Static Bypass mode: Transfer load to the bypass line due to UPS overload, fault, or manual request.
4. Maintenance Bypass mode: Transfer load to bypass line during maintenance operations.
5. Test mode: Battery discharge test, alarm test, or system diagnostic.
6. All transitions between modes shall be seamless and without interruption to the critical loads supplied.
7. The UPS shall continuously monitor the source parameters and utilize minimal power and attenuate transients to within limits in accordance with IEEE C62.41.

H. Provide battery management functions providing monitoring, protection, balancing of cells, fault diagnosis and communication reporting.

I. The UPS system shall not exceed 105 percent of rated voltage and current rating as established by the manufacturer.

J. Furnish the UPS system with thermal magnetic circuit breakers at both ends.

K. Utilize existing UPS floor mount if possible.

1.08 QUALITY ASSURANCE

A. Manufacturer:
1. Regularly engaged in manufacture of similar items.

2. UPS products shall have a certified record of satisfactory field operation for not less than 6000 hours, exclusive of the manufacturer's factory or laboratory tests.

3. UPS system manufactured more than six months prior to the date of delivery will not be accepted.

1.09 WARRANTY

A. Provide a minimum 5-year warranty from the date of shipment of the UPS.

1.10 DELIVERY AND STORAGE

A. Protect UPS in storage from humidity and temperature variations, moisture, water intrusion, dirt, corrosives and contaminants.

PART 2 PRODUCTS

2.01 UNINTERRUPTIBLE POWER SYSTEM

A. Gutor PDW 30KVA manufactured by Schneider Electric, One Boston Place, Suite 2700, Boston, MA 02108; or equal, having the following essential characteristics:

1. System Capacity under full rated load at a minimum of 0.9 power factor with batteries fully charged:

   a. Power: 30,000 Volt-ampere, minimum.

   b. AC power input: 480 VAC, 3 phase, 60 Hz.

   c. Total Harmonic Current Distortion (THD): 5 percent, maximum.

   d. Existing Battery Capacity (minimum requirements for UPS to support existing battery bank):

      1) 125VDC Battery System Voltage.

      2) UPS will utilize existing 620Ah battery bank.

   e. AC Power Output:

      1) 208V/120 VAC, 3 phase, 60 Hz.

   f. Output Breakers Bypass Section:

      1) Type: Molded Case Thermal Magnetic.

      2) Total: 3.

      3) Rating: 208V 3 Phase, 100A.

B. Short Circuit Rating:

1. 6.8 kA sym, and 6.9 kA asym. at 480V.

2. 1.6 kA sym, and 1.7 kA asym. at 208V.

C. Bypass Transformer:

1. 30kVA.
2. 480V to 208/120V.
3. 6% impedance at 150C.
4. Dry-type.
5. Delta to grounded Wye.
6. Copper winding.

D. Non-integrated battery bank. Utilize existing wet cell lead acid battery bank.

E. Enclosure: NEMA 1.

F. Communications:

1. Remote access via Modbus TCP/IP or DNP3.
2. Five alarm inputs.
3. Three alarm outputs.
4. 125VDC dry contacts.

G. Swappable power modules.

H. Voltage Regulation:

1. Balanced Load: Plus or minus 1.0 percent.
2. 100 percent load imbalance, phase-to-phase: Plus or minus 3 percent.

I. Surge protection and voltage regulation:

1. Minimum 40kA per phase.
2. Provide Voltage Protection Rating not exceeding 1200V L-L and 700V L-N at 480V.
3. Adhere to UL 1449 and IEEE C69.41.

J. Visual Status Indicators:

1. LCD touch screen HMI Interface and LED line display.
2. Externally visible.
3. Indicate online status.
4. Protection status.
5. Operation Modes:
   a. NORMAL.
   b. BATTERY.

c. STATIC BYPASS.

d. MAINTENANCE BYPASS.

e. TEST.

K. Input Circuit Breaker sized to simultaneously accept the full-rated load and battery recharge current.

L. Inverter Unit:

1. Solid-state capable of accepting power from the DC bus while providing AC output power within defined limits.
2. Output Overload: The inverter shall withstand an overload across its output terminals.
3. Synchronism: Normal operation in phase-lock with the bypass source.
4. Output Circuit Breaker: Thermal-magnetic.

M. Protection:

1. Undervoltage.
2. Overvoltage.
3. Overcurrent.
4. Transient surges from the AC power source in accordance with IEEE C62.41.1 and C62.41.2.

N. Battery Management

1. Equalization (Voltage Balancing).
2. Real-time monitoring.
3. Advance warning of potential failures.
4. Performance and trending analysis of individual battery cells.

2.02 NAMEPLATES

A. Nameplates:

1. Provide nameplates in accordance with standard drawing 40-D-6234 and for the following:
   a. Nameplate with owner's equipment designation and descriptive name.
   b. Nameplates for each device and terminal block mounted within enclosure.
      1) Mount nameplates inside of compartment above each device or terminal block.
      2) Use Government Format designations.
2. Equipment Designation Label: "UPS #".

2.03 ACCESSORIES

A. Enclosure Wire (Insulated Conductors Between Components): In accordance with Section 26 05 20 – Conductors and Cables.

B. Ground Bus:

1. Material: Copper.
2. Size and Length: Sufficient for attaching equipment ground conductors.

C. Terminal Blocks:

a. Minimum of two termination points.
b. Rating: 600 volts, 25 amperes, minimum.
c. Full-size marking strips.

2.04 SOURCE QUALITY CONTROL

A. Government reserves the right to inspect the UPS at supplier's manufacturing plant prior to final testing.

B. Tests to include but not limited to:

1. Input voltage verification.
2. Frequency verification.
3. Input harmonic distortion.
4. Power factor measurement.
5. Waveform capture/transient analysis.

PART 3 EXECUTION

3.01 INSTALLATION

A. If floor tiles require any modification for UPS installation in the Battery Room (20) identified on 467-D-1932 refer to report CCC Asbestos Assessment.

B. Where possible, reuse existing support structure for UPS installation.

C. In accordance with requirements in NFPA 70 and manufacturer's instructions.

D. Installation shall be completed in a neat and workmanlike manner:

1. Replace all damaged UPS components.
2. Replace all damage to enclosures or installation area and leave in a finished condition.

E. Coordination shall be made with the local Bureau of Reclamation (BOR) representative, who will be responsible for integrating the dry contacts into the existing SCADA system.

3.02 CONTRACTOR FIELD TESTING

A. General:

1. Perform in accordance with manufacturer's instructions. In addition, include the following:

   a. Visual and Mechanical Inspection:

      1) Verify equipment installation is per manufacturer's drawings and specifications.

      2) Check for physical damage, corrosion, or loose components.

      3) Verify all mechanical fasteners are torqued to specification.

      4) Verify clearances for ventilation and service access.

      5) Vacuum-clean enclosure interior.

      6) Verify the correct operation of all circuit breakers, alarm outputs and status indicators.

   b. Pre-start Up:

      1) Identify any potential short circuits.

      2) Verify input and bypass power voltages and phase rotation.

   c. Authorized Personnel Energizing:

      1) Energize the UPS modules and verify parameters are within limits.

      2) Verify DC link holding voltage, AC output voltages and output waveforms.

      3) Check for proper synchronization.

2. Wiring checkout and tests in accordance with Section 26 05 90 – Wiring Checkout and Tests.

3. Field Testing of unit shall be conducted after complete installation of equipment.

B. Site Test Procedures:

1. Test procedures shall define the tests required to ensure that the system meets technical, operational, and performance requirements.

2. Support personnel provided during testing shall be familiar with the project and be capable of fixing problems identified during testing.

C. Site Test Notification:

1. Government will witness testing. Notify Government at least 14 days in advance when tests are to be performed.

3.03 COMMISSIONING VERIFICATION

A. Contractor to demonstrate that the system was fully tested during assembly and installation and is a functioning, integrated and reliable control system.

B. Submit completed, signed, and approved test results to the COR and Government.

3.04 TRAINING

A. Provide the services of a factory-trained technician for one 2-hour training period for instructing personnel in the maintenance and operation of the UPS, on the date requested by the CO.

END OF SECTION

This page intentionally left blank.

SECTION 51 00 10
PHOTOGRAPHS

PART 1 GENERAL

51 00 10- 1 – Panelboard CPP1 and CPP2 Location in Communications Room

51 00 10- 2 – Panelboard CPP1 and CPP2 Close Up.

51 00 10- 3 – UPS Room and UPS Front

51 00 10- 4 – Close-up of UPS1

51 00 10- 5 – Ups Battery Charger Located in Ups Room

51 00 10- 6 – ATS 2 Along with MPG and MPN

51 00 10- 7 – ATS 1 Along with Transformer KBB, KBA and BCD Disconnect.

51 00 10- 8 – Panelboard PPAA

51 00 10- 9 – Battery Fused Disconnect

51 00 10- 80 – Panelboard PPB

51 00 10- 91 – Manual Transfer Switch MTS, Panelboard MPA and LPA

END OF SECTION

This page intentionally left blank.

SECTION 51 02 82

ASBESTOS BUILDING INSPECTION REPORT

PART 1 GENERAL

1.01 INSPECTION REPORT

A. In 2015, an asbestos building inspection was performed at the Casper Control Center.

B. Since that report, some materials have been abated. This is annotated in red text in the report.

C. This project includes the following areas noted in the report:

1. Communications Equipment room (referred to as "Communications Room" in the specifications),
2. Battery room, and
3. Panel room.

D. Summary of results for these areas:

Room	Homogenous Area/ Functional Space (HA/FS)	Sample No.	Item***	Asbestos content (%)	Photo
Battery room	6 / 13	CC-Dock-032812-07	Floor tile: 12-inch medium brownish red with cream and dark brown flecks	3	3
Battery room	6 / 13	CC-Dock-032812-07	Mastic: black	ND	3
Battery room	7 / 13	CC-Dock-032812-08	Floor tile: 12-inch lighter/medium brown with cream streaks	3	4
Battery room	7 / 13	CC-Dock-032812-08	Mastic: yellow and black	ND	4
Battery room	8 / 13	CC-Dock-032812-09	Floor tile: 12 inch light cream with gray and tan flecks	2	4
Battery room	8 / 13	CC-Dock-032812-09	Mastic: yellow	ND	4
Battery room	13 / 13	CC-CIO-040312-03	4 inch black coving	ND	12
Battery room	13 / 13	CC-CIO-040312-03	Mastic: brown	TR	12
Battery room	13 / 13	CC-CIO-040312-03	Tan resinous material	ND	12
Battery room	18 / 13	N/A	Concrete cinder blocks painted cream/white	Not considered ACM*	N/A
Battery room	23 / 13	CC-CIS-040312-04	Ceiling-plaster sheetrock with texture	ND	13
Battery room	23 / 13	CC-CIS-040312-04	Ceiling-plaster sheetrock with texture	ND	13
Battery room	23 / 13	CC-CIO-040312-05	Ceiling-plaster sheetrock with texture	ND	14
Battery room	23 / 13	CC-CIO-040312-05	Ceiling-plaster sheetrock with texture	ND	14
Battery room	23 / 13	CC-HW-040312-06	Ceiling-plaster sheetrock with texture	ND	15
Battery room	23 / 13	CC-HW-040312-06	Ceiling-plaster sheetrock with texture	ND	15
Battery room	23 / 13	CC-HW-040312-06	Ceiling-plaster sheetrock with texture	ND	15
Communications Equipment Room	3 / 12	CC-CER-032912-04	Floor tile: 12-inch cream gold	6	6
Communications Equipment Room	3 / 12	CC-CER-032912-04	Mastic: black	5	6
Communications Equipment Room	3 / 12	CC-CER-032912-05	Floor tile: 12 inch cream gold	6	7
Communications Equipment Room	3 / 12	CC-CER-032912-05	Mastic: black	7	7

Room	Homogenous Area/ Functional Space (HA/FS)	Sample No.	Item***	Asbestos content (%)	Photo
Communications Equipment Room	3 / 12	CC-CER-032912-06	Floor tile: 12 inch cream gold	6	7
Communications Equipment Room	5 / 12	CC-PR-032813-03	Floor: 4 foot dark brown floor panels with white streaks	ND	1
Communications Equipment Room	5 / 12	CC-PR-032813-03	Mastic: tan with tan wood	ND	1
Communications Equipment Room	5 / 12	CC-PR-032813-04	Floor: 4 foot dark brown floor panels with white streaks	ND	1
Communications Equipment Room	5 / 12	CC-PR-032813-04	Mastic: tan with tan wood	ND	1
Communications Equipment Room	13 / 12	CC-CIO-040312-03	4 inch black coving (tan resinous material	ND	12
Communications Equipment Room	13 / 12	CC-CIO-040312-03	Mastic: brown	TR	12
Communications Equipment Room	13 / 12	CC-CIO-040312-03	White paint with white fibrous material	ND	12
Communications Equipment Room	18 / 12	N/A	Concrete cinder blocks painted cream/white	Not considered ACM*	N/A
Communications Equipment Room	23 / 13	CC-CIS-040312-04	Ceiling-plaster sheetrock with texture	ND	13
Communications Equipment Room	23 / 13	CC-CIS-040312-04	Ceiling-plaster sheetrock with texture	ND	13
Communications Equipment Room	23 / 13	CC-CIO-040312-05	Ceiling-plaster sheetrock with texture	ND	14
Communications Equipment Room	23 / 13	CC-CIO-040312-05	Ceiling-plaster sheetrock with texture	ND	14
Communications Equipment Room	23 / 13	CC-HW-040312-06	Ceiling-plaster sheetrock with texture	ND	15
Communications Equipment Room	23 / 13	CC-HW-040312-06	Ceiling-plaster sheetrock with texture	ND	15

Room	Homogenous Area/ Functional Space (HA/FS)	Sample No.	Item***	Asbestos content (%)	Photo
Communications Equipment Room	23 / 13	CC-HW-040312-06	Ceiling-plaster sheetrock with texture	ND	15
Panel Room	4 / 11	CC-PR-032812-01	Floor tile: 12 inch gray (sample results note green tile)	2**	1
Panel Room	4 / 11	CC-PR-032812-01	Mastic: black (sample results note green tile)	8**	1
Panel Room	5 / 11	CC-PR-032813-03	Floor: 4 foot dark brown floor panels with white streaks	ND	1
Panel Room	5 / 11	CC-PR-032813-03	Mastic: yellow	TR	1
Panel Room	5 / 11	CC-PR-032813-04	Floor: 4 foot dark brown floor panels with white streaks	ND	1
Panel Room	5 / 11	CC-PR-032813-04	Mastic	ND	1
Panel Room	13 / 11	CC-PR-032812-05	4-inch black coving	ND	2
Panel Room	13 / 11	CC-PR-032812-06	Mastic: brown	ND	2
Panel Room	18 / 11	N/A	Concrete cinder blocks painted cream/white	Not considered ACM*	N/A

Notes:
ND: Non-detect.
N/A: not applicable.
TR: Trace (<1% visual estimate)
%: Asbestos concentration by volume.
On photo 12, the report notes a sample CC-CIO-040312-04 but there are no sample results for this sample number.
*: see Homogenous notes for HA-18.
**: Report notes that tile was replaced however there is no abatement report.
***: Item descriptions come from the HA's for the floor and ceiling tile and laboratory descriptions for the rest.

PART 2 PRODUCTS

Not Used

PART 3 EXECUTION

Not Used

END OF SECTION

This page intentionally left blank.

SECTION 52 00 00
DRAWINGS

PART 1 GENERAL

1.01 DISCREPANCIES, ERRORS, OR OMISSIONS

A. Inform the CO of discrepancies discovered on drawings in accordance with clause at FAR 52.236-21, Specifications and Drawings for Construction.

B. In accordance with clause at FAR 52.236-21, Specifications and Drawings for Construction, in case of discrepancies, written specifications take precedence over drawings unless otherwise specified.

1.02 PROJECT CONDITIONS

A. Where there are differences as determined by the CO between details and dimensions shown on drawings and details and dimensions of existing features at jobsite, use details and dimensions of existing features at jobsite.

1.03 INFORMATION DRAWINGS

A. Drawings marked "For Information Only" in the drawing list are included to show existing features about which knowledge is required to perform work under this contract. These drawings do not show work to be performed under this contract.

B. If there are differences as determined by the CO between details and dimensions shown on these drawings and those of existing features at jobsite, use details and dimensions of existing features at jobsite.

1.04 STANDARD DRAWINGS

A. Standard drawings may show details which are not a part of work under this contract. Disregard details shown on these drawings which are not applicable to work under this contract.

1.05 COPIES OF DRAWINGS

A. One set of full-size (22 inches by 34 inches) drawings, except standard drawings, will be furnished to the Contractor.

B. Upon request, additional half-size (11 inches by 17 inches) copies of standard drawings will be furnished to the Contractor.

1.06 LIST OF DRAWINGS

A. Drawings listed in Table 52 00 00A - List of Drawings, are made a part of Section C - Description/Specifications.

PART 2 PRODUCTS

Not Used

PART 3 EXECUTION

Not Used

Table 52 00 00A - List of Drawings

Sheet No.	Drawing No.	Title
General:		
		Cover Sheet
Electrical:		
1	467-D-60001	Panelboard PPAA Panel Schedule
2	467-D-60002	Panelboard CPP1 Panel Schedule
3	467-D-60003	Panelboard CPP2 Panel Schedule
4	467-D-60004	Electrical Installation Cable and Conduit Schedule
5	467-D-60005	Electrical Power Single-Line Temporary Power Detail
6	467-D-60006	Electrical Power Main Single-Line
7	467-703-2612	Demolition Plan
Existing Drawings:		
8	467-703-60044	Detailed Wiring Diagram
9	467-D-1909	Architectural Floor Plan and Details
10	467-D-1932	Electrical Systems Plans, Sections and Details
11	467-D-1933	Electrical Systems Sections & Details
12	467-703-2628	Main Distribution Panels MPA, LPA, LPAA Transformer KLA & Manual Transfer SW MTS
13	20-600-3812	Security Upgrade Casper Control Center Building Conduit and Cable Layout
Standard Drawings:		
14	40-D-4334	Typical Grounding Details
15	40-D-4335	Typical Grounding Details
16	40-D-6234	Standard Nameplates
17	40-D-7094	Conduit Clamp and Conduit Supports – Typical Details
18	40-D-7096	Title Block Format for Standard Drawings – Typical Arrangements
19	40-D-7102	Government Drawing Format - Drawing Border, Sample Title Block and Signature Lines

Table 52 00 00A - List of Drawings

Sheet No.	Drawing No.	Title
20	104-D-757	Electrical Installations Designations and Symbols
21	104-D-1150	Device Designations and Symbols to be Used on Single-Line and Schematic Diagrams

END OF SECTION

Attachment # 2
Drawings

BUREAU OF RECLAMATION

Uninterruptible Power Supply (UPS) Update and Downstream Panels

Wyoming Area Office, Mills, Wyoming

Missouri Basin Region

U.S. Department of the Interior

February 10, 2026

Released

Panelboard: PPAA

Supply From:	UPS Bkr 1	**Volts:**	208/120V	**A.I.C. Rating:**	10kA
Mounting:	Surface	**Phases:**	3	**Mains Type:**	Main Lugs Only
Enclosure:	NEMA 1	**Wires:**	4	**MCB Trip Rating:**	N/A
Bussing:	Copper	**Additional Features:**		**Main Bus Rating:**	100A

Equipment Notes:

CKT	Circuit Description	Trip	Poles	A		B		C		Poles	Trip	Circuit Description	CKT
1	Mobile Maint Sec.	15	1	180	180					1	15	C7RA Voice Record.	2
3	C9RA Recpt	15	1			540	540			1	20	Shop Recpt E Wall	4
5	CC Phone Switch	20	1					200	540	1	20	Shop Recpt SE Wall	6
7	Security Camera C&I	15	1	15	540					1	20	Shop Recpt SW Wall	8
9	Telephone T1	15	1			20	180			1	15	Unknown	10
11	Emergency Lights	15	1					180	180	1	20	Security Panel	12
13	Batt Room H2+Fan	15	1	220	60					1	20	Gate Camera Sec PNL	14
15	Spare	20	1				710			1	20	Security Rack	16
17	Spare	20	1							1	20	Spare	18
19	Spare	20	1							1	20	Spare	20
21	Spare	20	1							1	20	Spare	22
23	Spare	20	1							1	20	Spare	24
			Total Load:	1195 VA		1990 VA		1100 VA					
			Total Amp:	10 A		17 A		9 A					

Legend:

Load Classification	Connected Load	Demand Factor	Estimated Demand	Panel Totals	
Receptacles	2175 VA	1.0	2175 VA		
Motors	0 VA	1.0	0 VA	**Total Conn. Load:**	4285 VA
Heaters	0 VA	1.0	0 VA	**Total Est. Demand:**	4285 VA
Lighting	180 VA	1.0	180 VA	**Total Conn.:**	12 A
Other	1930 VA	1.0	1930 VA	**Total Est. Demand:**	12 A

Load Assumptions: Computer: 200–600 W; Cameras: 5–15 W each; Telephone T1: 10–20 W; Phone Switch: 50–200 W; Emergency Lights: up to 100 W; Security Panel: 20–50 W; Security Rack: DVR/NVR 50–100 W, Network Switch 30–60 W, Power Supplies 20–50 W, Server 200–500 W; Hydrogen Monitor: 5–20 W; Fan: 50–200 W; Voice Recorder: 10–30 W; Receptacles: NEC 180 VA each (assume 3 if unknown); Breaker sizes from existing panel.

NOTES

1. Load values are estimates only. Verify load information when selecting panelboard.

REFERENCE DRAWINGS

PANELBOARD CPP1 PANEL SCHEDULE	467-D-60002
PANELBOARD CPP2 PANEL SCHEDULE	467-D-60003
ELECTRICAL INSTALLATION CABLE AND CONDUIT SCHEDULE	467-D-60004
ELECTRICAL POWER MAIN SINGLE LINE	467-D-60006

BUREAU OF RECLAMATION

ALWAYS THINK SAFETY

U.S. DEPARTMENT OF THE INTERIOR
BUREAU OF RECLAMATION
PICK-SLOAN MISSOURI BASIN PROGRAM
TRANSMISSION DIVISION (WEST)

MAINTENANCE AND SERVICE AREA FACILITIES

SUPERVISORY CONTROL BUILDING

R. SHEA
DESIGNED
R. SHEA
DRAWN
A. BUITRAGO
CHECKED
Kelly, John T P.E.
TECH. APPR.
Mendlin, Eric T P.E.
APPROVED
ADMIN APPROVAL -

DENVER, CO 2026-01-23

PANELBOARD PPAA

PANEL SCHEDULE

467-D-60001
SHEET

LAST SAVED DATE
2026-01-23
LAST SAVED BY
RSHEA

CAD SYSTEM
AutoCAD 25.0S (LMS TECH)
CAD FILENAME
467-D-60001.DWG

Released

Panelboard: CPP1

Supply From:	UPS Bkr 2	**Volts:**	208/120V	**A.I.C. Rating:**	10kA
Mounting:	Surface	**Phases:**	3	**Mains Type:**	Main Lugs Only
Enclosure:	NEMA 1	**Wires:**	4	**MCB Trip Rating:**	N/A
Bussing:	Copper	**Additional Features:**		**Main Bus Rating:**	100A

Equipment Notes:

CKT	Circuit Description	Trip	Poles	A		B		C		Poles	Trip	Circuit Description	CKT
1	Comm/Switching	20	1	180	540					1	20	Control Center Desk	2
3	Recept.	20	1			540	540			1	20	Control Center Desk	4
5	Smoke Damper	20	1					20	540	1	20	Control Center Desk	6
7	Sec. Camera Mon.	20	1	100	180					1	20	Communications	8
9	Emergency Lights	20	1			100	540			1	20	NE Corner Recpt	10
11	Old Control Desk	20	1					540	540	1	20	Trench #3 Center	12
13	CCC Recpt.	20	1	540	200					1	20	Comm Rack	14
15	CCC Recpt.	20	1			540	50			1	20	FA Panel	16
17	CCC Wall Recpt.	20	1					540	15	1	20	Sec. Camera Hall	18
19	Spare	20	1							1	20	Spare	20
21	Spare	20	1							1	20	Spare	22
23	Spare	20	1							1	20	Spare	24
			Total Load:	1740 VA		2310 VA		2195 VA					
			Total Amp:	15 A		19 A		18 A					

Legend:

Load Classification	Connected Load	Demand Factor	Estimated Demand	Panel Totals	
Receptacles	2160 VA	1.0	2160 VA		
Motors	0 VA	1.0	0 VA	**Total Conn. Load:**	6245 VA
Heaters	0 VA	1.0	0 VA	**Total Est. Demand:**	6245 VA
Lighting	100 VA	1.0	100 VA	**Total Conn.:**	17 A
Other	3985 VA	1.0	3985 VA	**Total Est. Demand:**	17 A

Load Assumptions: Computer loads: 200–600 W; Cameras: 5–15 W each; Communication rack: 50–200 W; Emergency lights (with battery): up to 100 W; Security monitor: 20–50 W; Fire alarm panel: 20–50 W; Smoke damper: 5–20 W; Receptacles: NEC 180 VA each (assume 3 if unknown); Use larger value for ranges; Breaker sizes from existing panel.

NOTES

1. Load values are estimates only. Verify load information when selecting panelboard.

REFERENCE DRAWINGS

PANELBOARD PPAA PANEL SCHEDULE	467-D-60001
PANELBOARD CPP2 PANEL SCHEDULE	467-D-60003
ELECTRICAL INSTALLATION CABLE AND CONDUIT SCHEDULE	467-D-60004
ELECTRICAL POWER MAIN SINGLE LINE	467-D-60006

BUREAU OF RECLAMATION

ALWAYS THINK SAFETY

U.S. DEPARTMENT OF THE INTERIOR
BUREAU OF RECLAMATION
PICK-SLOAN MISSOURI BASIN PROGRAM
TRANSMISSION DIVISION (WEST)

MAINTENANCE AND SERVICE AREA FACILITIES

SUPERVISORY CONTROL BUILDING

R. SHEA
DESIGNED
R. SHEA
DRAWN
A. BUITRAGO
CHECKED
Kelly, John T P.E.
TECH. APPR.
Mendlin, Eric T P.E.
APPROVED
ADMIN APPROVAL -

DENVER, CO 2026-01-23

PANELBOARD CPP1

PANEL SCHEDULE

467-D-60002
SHEET

LAST SAVED DATE 2026-01-23
LAST SAVED BY RSHEA

CAD SYSTEM AutoCAD 25.0S (LMS TECH)
CAD FILENAME 467-D-60002.DWG

Released

Panelboard: CPP2

Supply From:	UPS Bkr 3	**Volts:**	208/120V	**A.I.C. Rating:**	10kA
Mounting:	Surface	**Phases:**	3	**Mains Type:**	Main Lugs Only
Enclosure:	NEMA 1	**Wires:**	4	**MCB Trip Rating:**	N/A
Bussing:	Copper	**Additional Features:**		**Main Bus Rating:**	100A

Equipment Notes:

CKT	Circuit Description	Trip	Poles	A		B		C		Poles	Trip	Circuit Description	CKT
1	48VDC Rectifier Rec	30	2	950	300					1	20	Middle Rack GSS	2
3						950	1200			2	30	Gen Building Panel LA3 (9, 11)	4
5	Old Control Desk	20	1					540	1200				6
7	Old Control Desk	20	1	540	450					1	20	Casp. Local RTU	8
9	Control Center Desk	20	1			540	540			1	20	Trench #3 Center	10
11	Control Center Desk	20	1					540	50	1	20	Water Dept Tele	12
13	Right Side CCC Dis.	20	1	540						1	20	Spare	14
15	Spare	20	1							1	20	Spare	16
17	CCC W Wall Recpt.	20	1					540	540	1	20	LCB Recpt.	18
19	Scada Service Rack	20	1	750						1	20	Spare	20
21	Spare	20	1				540			1	20	CCC Desk AC	22
23	Comm Rack	20	1					600		1	20	Spare	24
			Total Load:	3530 VA		3770 VA		4010 VA					
			Total Amp:	29 A		31 A		33 A					

Legend:

Load Classification	Connected Load	Demand Factor	Estimated Demand	Panel Totals	
Receptacles	1080 VA	1.0	1080 VA		
Motors	0 VA	1.0	0 VA	**Total Conn. Load:**	11310 VA
Heaters	0 VA	1.0	0 VA	**Total Est. Demand:**	11310 VA
Lighting	0 VA	1.0	0 VA	**Total Conn.:**	31 A
Other	10230 VA	1.0	10230 VA	**Total Est. Demand:**	31 A

Load Assumptions: Rectifier (microwave comm): ~1900 W; Generator building panelboard (lighting/receptacles): ~2400 W; Display board: 20–50 W; SCADA rack: ~750 W (server 300 W, network 200 W, monitor 100 W, support devices 150 W); Communications rack: ~600 W (router 50 W, switch 100 W, server 300 W, misc 150 W); RTU: ~450 W; Receptacles: NEC 180 VA each (assume 3 if unknown); Use larger value for ranges; Breaker sizes from existing panelboards.

NOTES

1. Load values are estimates only. Verify load information when selecting panelboard.

REFERENCE DRAWINGS

PANELBOARD PPAA PANEL SCHEDULE	467-D-60001
PANELBOARD CPP1 PANEL SCHEDULE	467-D-60002
ELECTRICAL INSTALLATION CABLE AND CONDUIT SCHEDULE	467-D-60004
ELECTRICAL POWER MAIN SINGLE LINE	467-D-60006

LAST SAVED DATE 2026-01-23
LAST SAVED BY RSHEA

CAD SYSTEM AutoCAD 25.0S (LMS TECH)
CAD FILENAME 467-D-60003.DWG

3

BUREAU OF RECLAMATION

ALWAYS THINK SAFETY

U.S. DEPARTMENT OF THE INTERIOR
BUREAU OF RECLAMATION
PICK-SLOAN MISSOURI BASIN PROGRAM
TRANSMISSION DIVISION (WEST)

MAINTENANCE AND SERVICE AREA FACILITIES
SUPERVISORY CONTROL BUILDING

R. SHEA DESIGNED
R. SHEA DRAWN
A. BUITRAGO CHECKED
Kelly, John T P.E. TECH. APPR.
Mendlin, Eric T P.E. APPROVED
ADMIN APPROVAL -

DENVER, CO 2026-01-23

PANELBOARD CPP2

PANEL SCHEDULE

467-D-60003
SHEET

Released

CABLE AND CONDUIT SCHEDULE

CONDUIT SIZE -TYPE	CONDUCTORS	PURPOSE	ORIGIN	DESTINATION	NOTES
1 1/2" EMT	4-1/c-1 AWG + 8 AWG GND	POWER TO PANELBOARD CPP1	UPS BRK 1	CPP1	FEED RUNS FROM CONDUIT TO CEILING CABLE TRAY
1 1/2" EMT	4-1/c-1 AWG + 8 AWG GND	POWER TO PANELBOARD CPP2	UPS BRK 3	CPP2	FEED RUNS FROM CONDUIT TO CEILING CABLE TRAY
1 1/2" EMT	4-1/c-1 AWG + 8 AWG GND	POWER TO PANELBOARD PPAA	UPS BRK 2	PPAA	FEED RUNS FROM CONDUIT TO CEILING CABLE TRAY
2" EMT	4-1/c-1/0 AWG + 6 AWG GND	POWER TO PANELBOARD PPB	MPG	PPB	FEED RUNS FROM CONDUIT TO CEILING CABLE TRAY
2" EMT	4-1/c-1/0 AWG + 4 AWG GND	POWER TO PANELBOARD MPG	ATS	MPG	FEEDER RUNS FROM CONDUIT TO UNDER RAISED FLOOR
1 1/2" EMT	4-1/c-1 AWG + 4 AWG GND	POWER TO PANELBOARD MPN	ATS	MPN	FEEDER RUNS FROM CONDUIT TO UNDER RAISED FLOOR
1" EMT	4-1/c-6 AWG + 10 AWG GND	POWER TO UPS	MPN	UPS	FEEDER RUNS FROM CONDUIT TO CEILING CABLE TRAY
3" EMT	4-1/c-350 KCMIL + 4 AWG GND	POWER TO PANELBOARD MPA	ATS	MPA	FEEDER RUNS IN CONDUIT
2 1/2" EMT	2-1/c-250 KCMIL + 2 AWG GND	BATTERY POWER TO UPS	BATTERY	YBD	FEED RUNS FROM BATTERY TO DISCONNECT
2 1/2" EMT	2-1/c-250 KCMIL + 2 AWG GND	BATTERY POWER TO UPS	YBD	FBD	EXISTING CABLES REUSED
2 1/2" EMT	2-1/c-250 KCMIL + 4 AWG GND	BATTERY POWER TO DC PANELBOARD	FBD	BPA	EXISTING CABLES REUSED
2 1/2" EMT	2-1/c-250 KCMIL + 4 AWG GND	BATTERY POWER TO UPS	FBD	UPS	EXISTING CABLES REUSED
3" EMT	4-1/c-4/0 AWG + 4 AWG GND	EG POWER TO ATS	EG	ATS	EXISTING CABLES REUSED
4" EMT	4-1/c-350 KCMIL + 4 AWG GND	SERVICE ENTRANCE POWER	KHB	ATS	EXISTING CABLES REUSED
1" EMT	2-5/c-10 AWG	UTILITY METER CT AND VOLTAGE SENSING	MKW	ATS	EXISTING CABLES REUSED
1/2" EMT	1-8/c-16 AWG	THERMOSTAT DISABLE	ATS	TSTAT	THERMOSTAT DISABLE CABLE

NOTES

1. Building utilizes a raise floor and drop ceiling where power and communication cables are routed.
2. Generator Auto Start cable not shown in table.
3. Existing cables may be reused if it meets the size listed on this schedule and passes inspection and testing.

EXPLANATION

DEVICE	LOCATION	DESCRIPTION
ATS (NEW)	Distribution Panel Room (23)	480/277V, 300A, 3-Phase, 4 wire, automatic transfer switch
CPP1 (NEW)	Computer/ Comm. Room (15)	208/120V, 100A, 3-phase, 4 wire panelboard
CPP2 (NEW)	Computer/ Comm. Room (15)	208/120V, 100A, 3-phase, 4 wire panelboard
EMT		Electric Metallic Tubing
FBD	UPS/Battery Room (20)	600V Fused Disconnect Switch.
KHB	Near Switchyard	225 kVA, 2.4kV - 480Y Pad Mount Transformer
MPA	Distribution Panel Room (23)	480/277V, 300A, 3-phase, 4 wire panelboard.
MPG (NEW)	UPS/Battery Room (20)	480/277V, 150A, 3-phase, 4 wire, enclosed circuit breaker
MPN (NEW)	UPS/Battery Room (20)	480/277V, 60A, 3-phase, 4 wire, enclosed circuit breaker
MKW	Distribution Panel Room (23)	Utility Meter Enclosure
PPAA (NEW)	Computer/ Comm. Room (15)	208/120V, 100A, 3-phase, 4 wire panelboard
PPB	Air Conditioning Room (21)	480/277V, 200A, 3-phase, 4 wire panelboard.
TSTAT	Office Space	HVAC Thermostat
UPS (NEW)	UPS/Battery Room (20)	30kVA, 480V, 3-phase, uninterruptable power supply.
UPS BKR #	UPS/Battery Room (20)	Uninterruptable Power Supply output breakers.
YBD (NEW)	Mobile Comm. Service Area (22)	600V, 300A, non-fused, 2 pole, heavy duty, safety disconnect switch

REFERENCE DRAWINGS

MAIN DISTRIBUTION PANELS MPA, LPA, LPAA, LCPA, TRANSFER SW. MTS AND KLA D.W.D.	467-703-2628
PANELBOARD SCHEDULES FOR PPA, PPB, PPAA, LPBB, CPP1, AND CPP2	467-703-2629
SUPERVISORY CONTROL BLDG.- PLOT PLAN	467-D-1932
PANELBOARD PPAA PANEL SCHEDULE	467-D-60001
PANELBOARD CPP1 PANEL SCHEDULE	467-D-60002
PANELBOARD CPP2 PANEL SCHEDULE	467-D-60003
ELECTRICAL POWER MAIN SINGLE LINE	467-D-60006

BUREAU OF RECLAMATION

ALWAYS THINK SAFETY

U.S. DEPARTMENT OF THE INTERIOR
BUREAU OF RECLAMATION
PICK-SLOAN MISSOURI BASIN PROGRAM
TRANSMISSION DIVISION (WEST)

MAINTENANCE AND SERVICE AREA FACILITIES

SUPERVISORY CONTROL BUILDING

R. SHEA
DESIGNED
R. SHEA
DRAWN
A. BUITRAGO
CHECKED
Kelly, John T P.E.
TECH. APPR.
Mendlin, Eric T P.E.
APPROVED
ADMIN APPROVAL -

DENVER, CO 2026-01-23

ELECTRICAL INSTALLATION

CABLE AND CONDUIT SCHEDULE

467-D-60004

SHEET 1

LAST SAVED DATE
2026-01-23
LAST SAVED BY
RSHEA

CAD SYSTEM
AutoCAD 25.0S (LMS TECH)
CAD FILENAME
467-D-60004.DWG

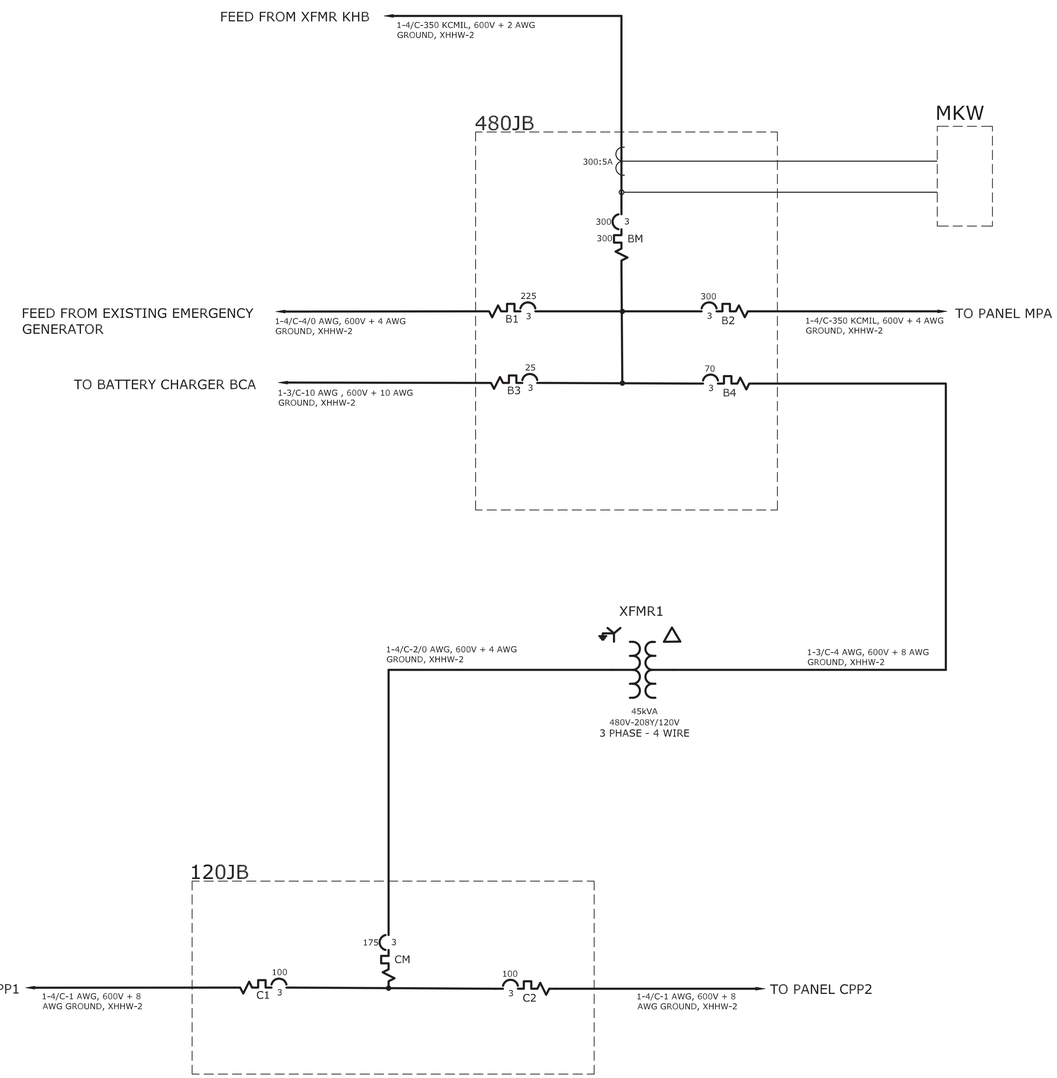

NOTES

1. Drawing is used for illustrative purposes to show loads to be powered by temporary equipment. Contractor to develop actual temporary power plan to be used.

EXPLANATION

DEVICE	LOCATION	DESCRIPTION
120JB	Computer/ Comm. Room (15)	208/120V, 200A, 3-phase, 4 wire panelboard.
480JB	Distribution Panel Room (23)	480/277V, 400A, 3-phase, 4 wire panelboard.
B#	Temporary Power Panelboard	Molded case thermal magnetic trip breakers compatible with panelboard.
BCA	UPS/Battery Room (20)	480Y-125VDC, Battery Charger.
C#	Temporary Power Panelboard	Molded case thermal magnetic trip breakers compatible with panelboard.
CPP1	Computer/ Comm. Room (15)	208/120V, 100A, 3-phase, 4 wire panelboard.
CPP2	Computer/ Comm. Room (15)	208/120V, 100A, 3-phase, 4 wire panelboard.
KHB	Near Switchyard	225 kVA, 2.4kV - 480Y Pad Mount Transformer
MPA	Distribution Panel Room (23)	480/277V, 300A, 3-phase, 4 wire panelboard.
MKW	Distribution Panel Room (23)	Utility Meter Enclosure.

REFERENCE DRAWINGS

ELECTRICAL POWER MAIN SINGLE-LINE SCHEMATIC DIAGRAM	467-703-2612
MAIN DISTRIBUTION PANELS MPA, LPA, LPAA, LCPA, TRANSFER SW. MTS AND KLA D.W.D.	467-703-2628
SUPERVISORY CONTROL BLDG.-HVAC WIRING	467-D-1931
SUPERVISORY CONTROL BLDG.- PLOT PLAN	467-D-1932
PANELBOARD PPAA PANEL SCHEDULE	467-D-60001
PANELBOARD CPP1 PANEL SCHEDULE	467-D-60002
PANELBOARD CPP2 PANEL SCHEDULE	467-D-60003

BUREAU OF RECLAMATION

ALWAYS THINK SAFETY

U.S. DEPARTMENT OF THE INTERIOR
BUREAU OF RECLAMATION
PICK-SLOAN MISSOURI BASIN PROGRAM
TRANSMISSION DIVISON - WYOMING

MAINTENANCE AND SERVICE AREA FACILITIES

SUPERVISORY CONTROL BUILDING

R. SHEA
DESIGNED
R. SHEA
DRAWN
A. BUITRAGO
CHECKED
X
TECH. APPR. TITLE
X
APPROVED
ADMIN APPROVAL - TITLE

DENVER, COLORADO 2026-01-15

TEMPORARY POWER

SINGLE LINE DIAGRAM

467-D-60005

SHEET 1

Released

LAST SAVED DATE 2026-01-15
LAST SAVED BY RSHEA

CAD SYSTEM AutoCADSS (LMS TECH)
CAD FILENAME 467-D-60005.DWG

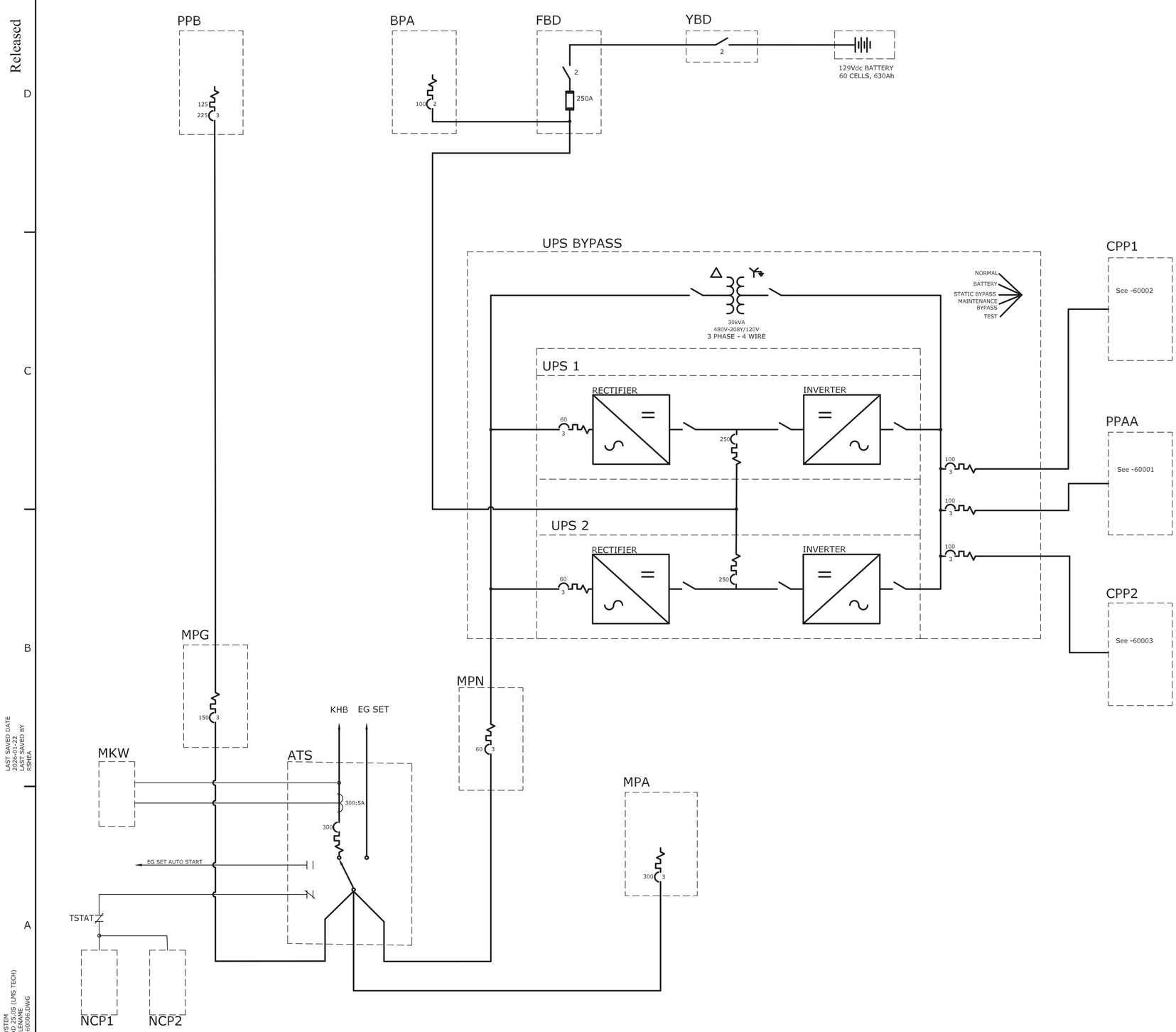

NOTES

1. Drawing for construction purposes only. Drawing 467-703-2612 will require update upon installation.
2. Ground-Neutral bond will be at ATS.

EXPLANATION

DEVICE	LOCATION	DESCRIPTION
ATS (NEW)	Distribution Panel Room (23)	480Y/277V, 300A, 3-phase automatic transfer switch.
BPA	UPS/Battery Room (20)	100A, 250V, DC panelboard.
CPP1 (NEW)	Computer/ Comm. Room (15)	208/120V, 100A, 3-phase, 4 wire panelboard.
CPP2 (NEW)	Computer/ Comm. Room (15)	208/120V, 100A, 3-phase, 4 wire panelboard.
FBD	UPS/Battery Room (20)	600V Fused Disconnect Switch.
KHB	Near Switchyard	225 kVA, 2.4kV - 480Y Pad Mount Transformer
MPA	Distribution Panel Room (23)	480/277V, 300A, 3-phase, 4 wire panelboard.
MPG (NEW)	UPS/Battery Room (20)	150A, 480/277V, 3-phase, 4 wire enclosed circuit breaker.
MPN (NEW)	UPS/Battery Room (20)	60A, 480/277V, 3-phase, 4 wire enclosed circuit breaker.
MKW	Distribution Panel Room (23)	Utility Meter Enclosure.
NCP1	Heating/ Ventilating Room (25)	HVAC unit.
NCP2	Heating/ Ventilating Room (25)	HVAC unit.
PPAA (NEW)	Computer/ Comm. Room (15)	208/120V, 100A, 3-phase, 4 wire panelboard.
PPB	Air Conditioning Room (21)	480/277V, 200A, 3-phase, 4 wire panelboard.
UPS (NEW)	UPS/Battery Room (20)	30kVA, 480V, 3-phase, uninterruptible power supply.
YBD (NEW)	Mobile Comm. Service Area (22)	600V, 300A, non-fused, 2 pole, heavy duty, safety disconnect switch.

REFERENCE DRAWINGS

SECURITY UPGRADE	20-600-3812
ELECTRICAL PANEL MAIN SINGLE LINE SCHEMATIC DIAGRAM	467-703-2612
MAIN DISTRIBUTION PANELS MPA, LPA, LPAA, LCPA, TRANSFER SW. MTS AND KLA D.W.D.	467-703-2628
SUPERVISORY CONTROL BLDG.-HVAC WIRING	467-D-1931
SUPERVISORY CONTROL BLDG.- PLOT PLAN	467-D-1932
PANELBOARD PPAA PANEL SCHEDULE	467-D-60001
PANELBOARD CPP1 PANEL SCHEDULE	467-D-60002
PANELBOARD CPP2 PANEL SCHEDULE	467-D-60003

BUREAU OF RECLAMATION

ALWAYS THINK SAFETY

U.S. DEPARTMENT OF THE INTERIOR
BUREAU OF RECLAMATION
PICK-SLOAN MISSOURI BASIN PROGRAM
TRANSMISSION DIVISION (WEST)

MAINTENANCE AND SERVICE AREA FACILITIES

SUPERVISORY CONTROL BUILDING

R. Shea
DESIGNED
R. Shea
DRAWN
A. BUITRAGO
CHECKED
Kelly, John T P.E.
TECH. APPR.
Mendlin, Eric T P.E.
APPROVED
ADMIN APPROVAL

DENVER, CO 2026-01-23

ELECTRICAL POWER SINGLE-LINE

BACKUP POWER DETAILS

467-D-60006
SHEET

Released

LAST SAVED DATE 2026-01-22
LAST SAVED BY RSHEA

CAD SYSTEM AutoCAD 25.0S (LMS TECH)
CAD FILENAME 467-D-60006.DWG

467–703–2612

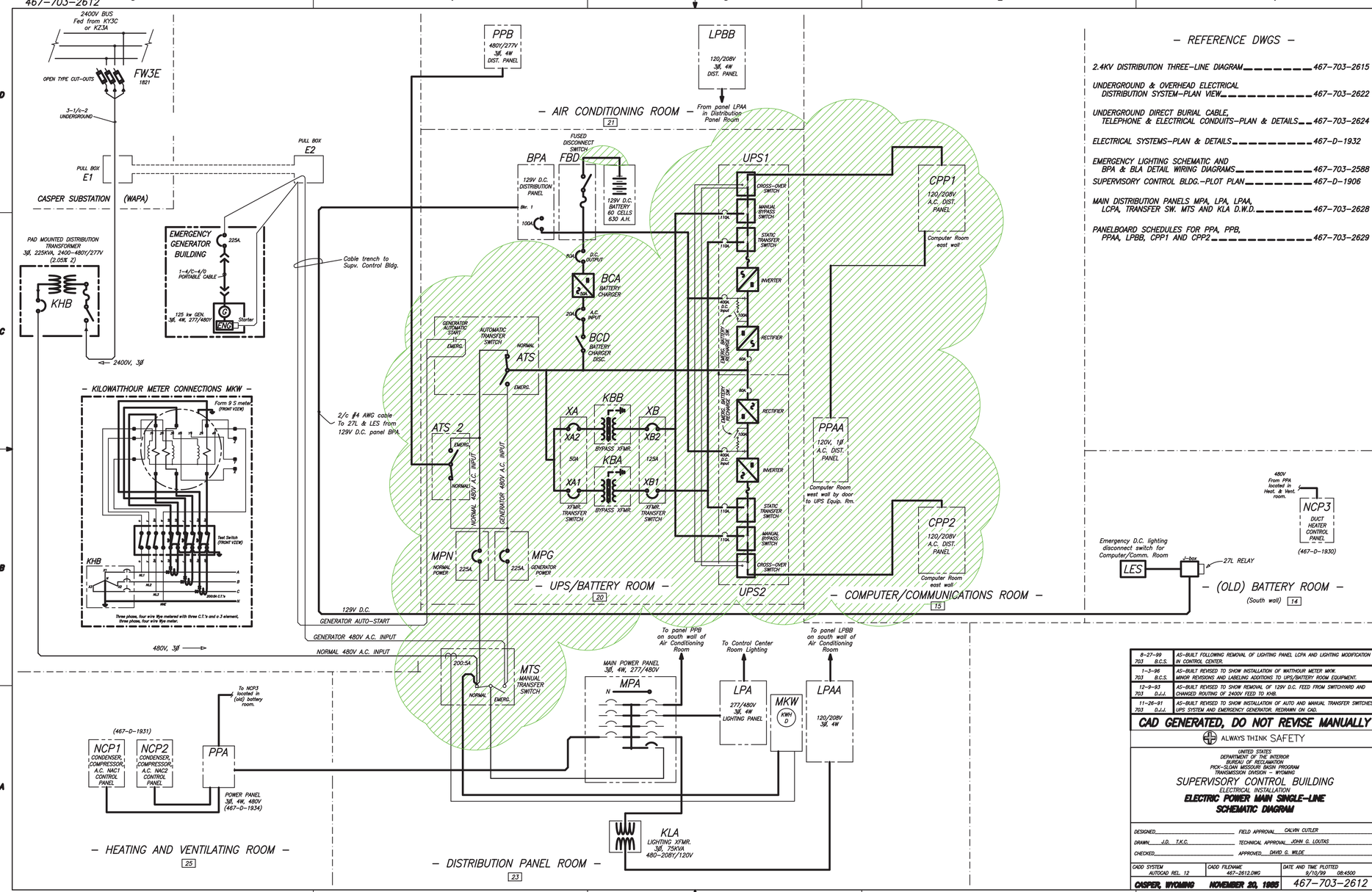

– REFERENCE DWGS –

2.4KV DISTRIBUTION THREE–LINE DIAGRAM	467–703–2615
UNDERGROUND & OVERHEAD ELECTRICAL DISTRIBUTION SYSTEM–PLAN VIEW	467–703–2622
UNDERGROUND DIRECT BURIAL CABLE, TELEPHONE & ELECTRICAL CONDUITS–PLAN & DETAILS	467–703–2624
ELECTRICAL SYSTEMS–PLAN & DETAILS	467–D–1932
EMERGENCY LIGHTING SCHEMATIC AND BPA & BLA DETAIL WIRING DIAGRAMS	467–703–2588
SUPERVISORY CONTROL BLDG.–PLOT PLAN	467–D–1906
MAIN DISTRIBUTION PANELS MPA, LPA, LPAA, LCPA, TRANSFER SW. MTS AND KLA D.W.D.	467–703–2628
PANELBOARD SCHEDULES FOR PPA, PPB, PPAA, LPBB, CPP1 AND CPP2	467–703–2629

8–27–99 703 B.C.S.	AS–BUILT FOLLOWING REMOVAL OF LIGHTING PANEL LCPA AND LIGHTING MODIFICATION IN CONTROL CENTER.
1–3–96 703 B.C.S.	AS–BUILT REVISED TO SHOW INSTALLATION OF WATTHOUR METER MKW. MINOR REVISIONS AND LABELING ADDITIONS TO UPS/BATTERY ROOM EQUIPMENT.
12–9–93 703 D.J.J.	AS–BUILT REVISED TO SHOW REMOVAL OF 129V D.C. FEED FROM SWITCHYARD AND CHANGED ROUTING OF 2400V FEED TO KHB.
11–26–91 703 D.J.J.	AS–BUILT REVISED TO SHOW INSTALLATION OF AUTO AND MANUAL TRANSFER SWITCHES, UPS SYSTEM AND EMERGENCY GENERATOR. REDRAWN ON CAD.

CAD GENERATED, DO NOT REVISE MANUALLY

ALWAYS THINK SAFETY

UNITED STATES
DEPARTMENT OF THE INTERIOR
BUREAU OF RECLAMATION
PICK–SLOAN MISSOURI BASIN PROGRAM
TRANSMISSION DIVISION – WYOMING

SUPERVISORY CONTROL BUILDING
ELECTRICAL INSTALLATION
ELECTRIC POWER MAIN SINGLE–LINE SCHEMATIC DIAGRAM

DESIGNED _____ FIELD APPROVAL CALVIN CUTLER
DRAWN J.D. T.K.C. TECHNICAL APPROVAL JOHN G. LOUTAS
CHECKED _____ APPROVED DAVID G. WILDE

CADD SYSTEM	CADD FILENAME	DATE AND TIME PLOTTED
AUTOCAD REL. 12	467–2612.DWG	9/10/99 08:45:00

CASPER, WYOMING NOVEMBER 20, 1985 467–703–2612

(22x34)

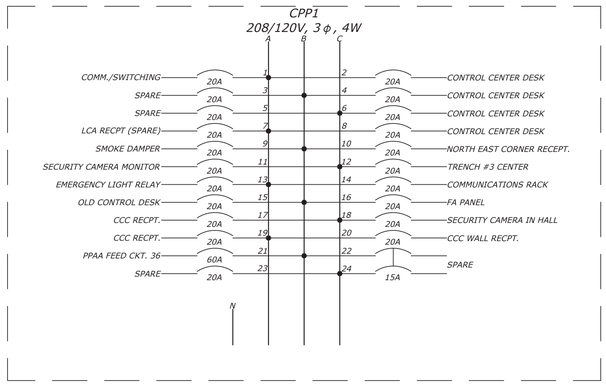

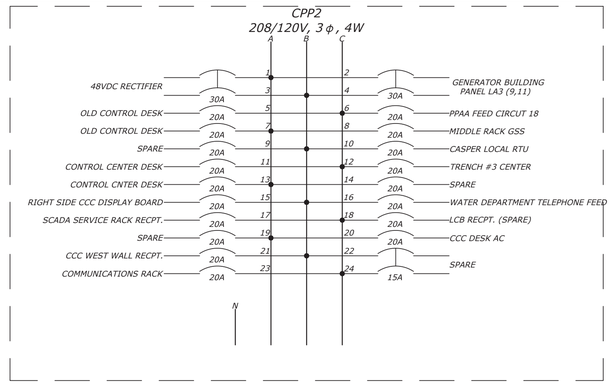

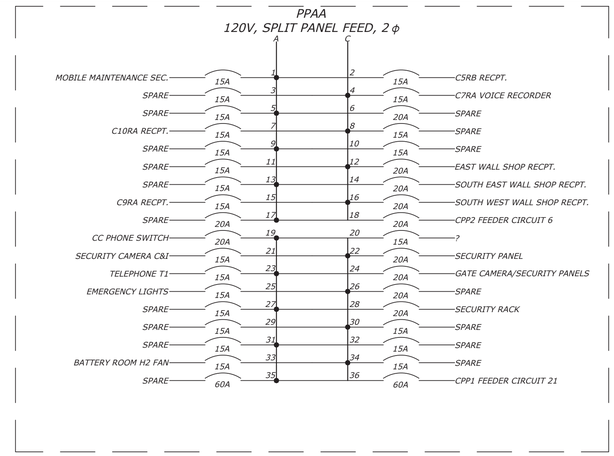

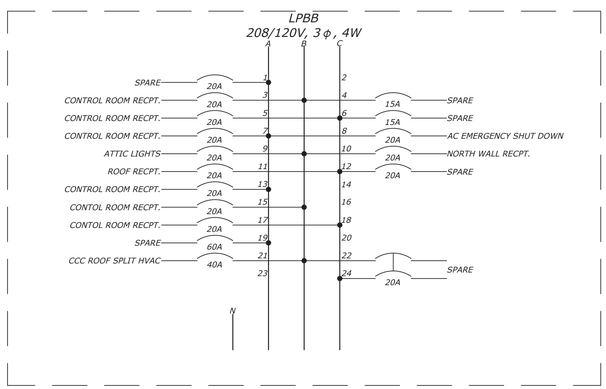

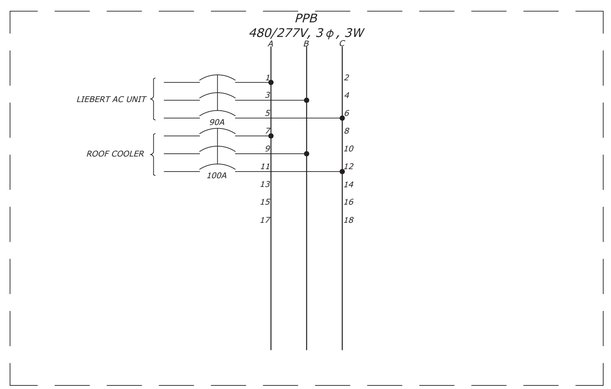

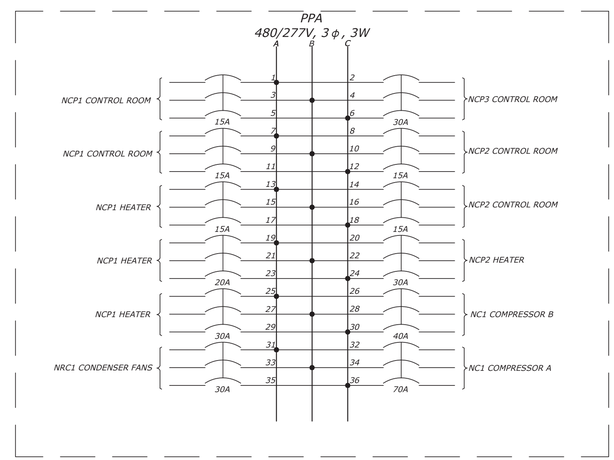

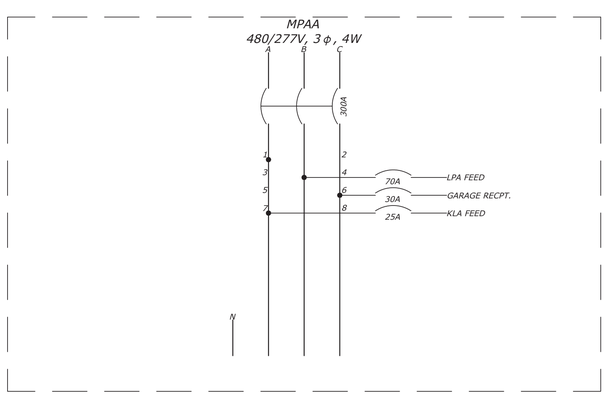

BUREAU OF RECLAMATION

U.S. DEPARTMENT OF THE INTERIOR
BUREAU OF RECLAMATION
PICK-SLOAN MISSOURI BASIN PROGRAM
TRANSMISSION DIVISION (WEST)

ALWAYS THINK SAFETY

MAINTENANCE AND SERVICE AREA

FACILITIES
DISTRIBUTION PANELS

Parker,Wayne
DESIGNED
Longoria,Albert
DRAWN
X
CHECKED
Parker, Wayne R
TECH. APPR.

APPROVED
ADMIN APPROVAL

MILLS, WY 2023-09-14

DETAILED WIRING DIAGRAM

DETAILS (THREE LINE MAXIMUM)

467-703-60044

SHEET 1

LAST SAVED DATE
2023-09-14
LAST SAVED BY
WPARKER

CAD SYSTEM
AutoCAD LT
CAD FILE NAME
467-703-60044-RD-1.DWG

FORM 7-1289
(JULY '62)

9

91

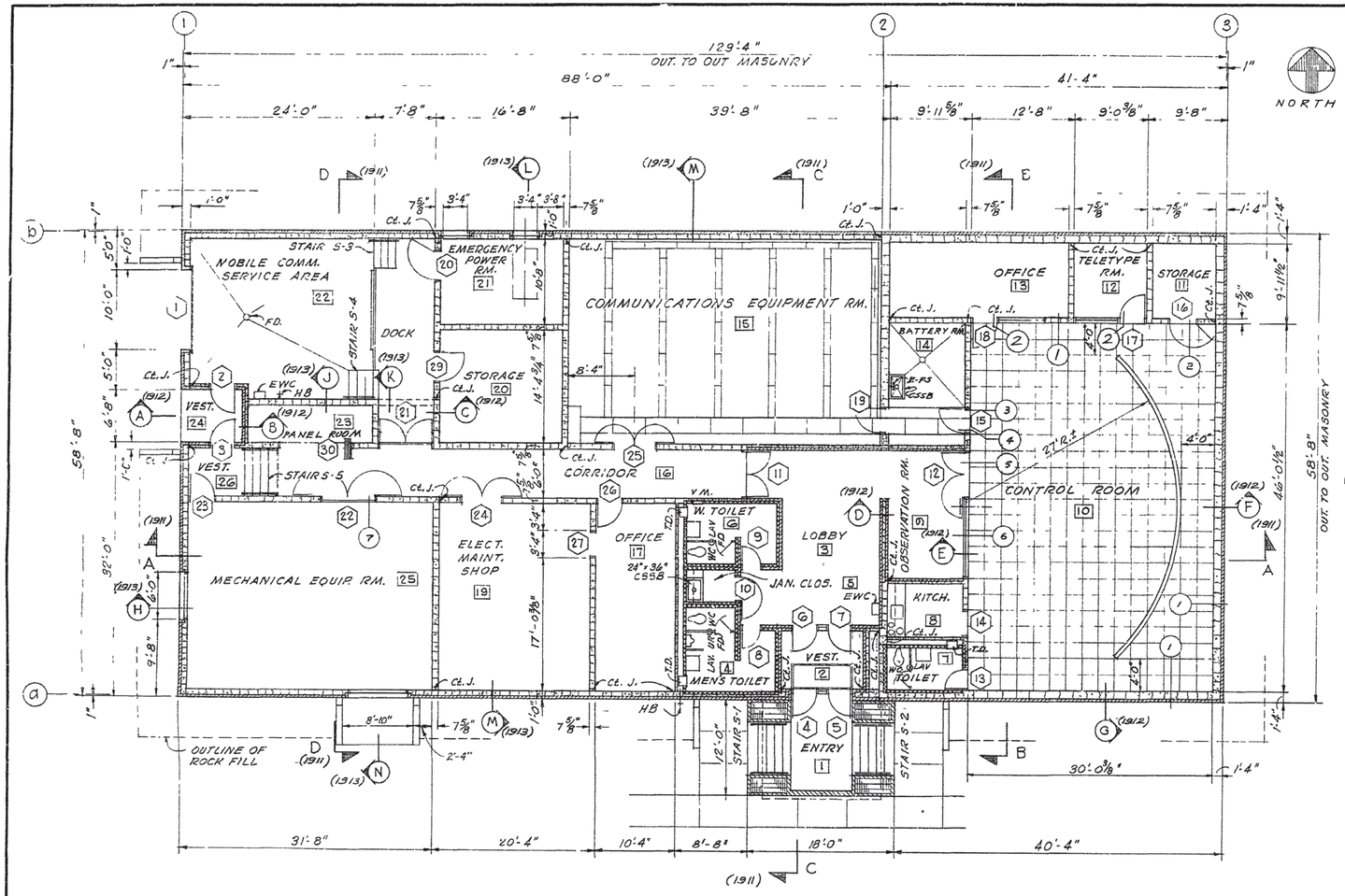

FLOOR PLAN

5 0 5 10 15 20
SCALE OF FEET

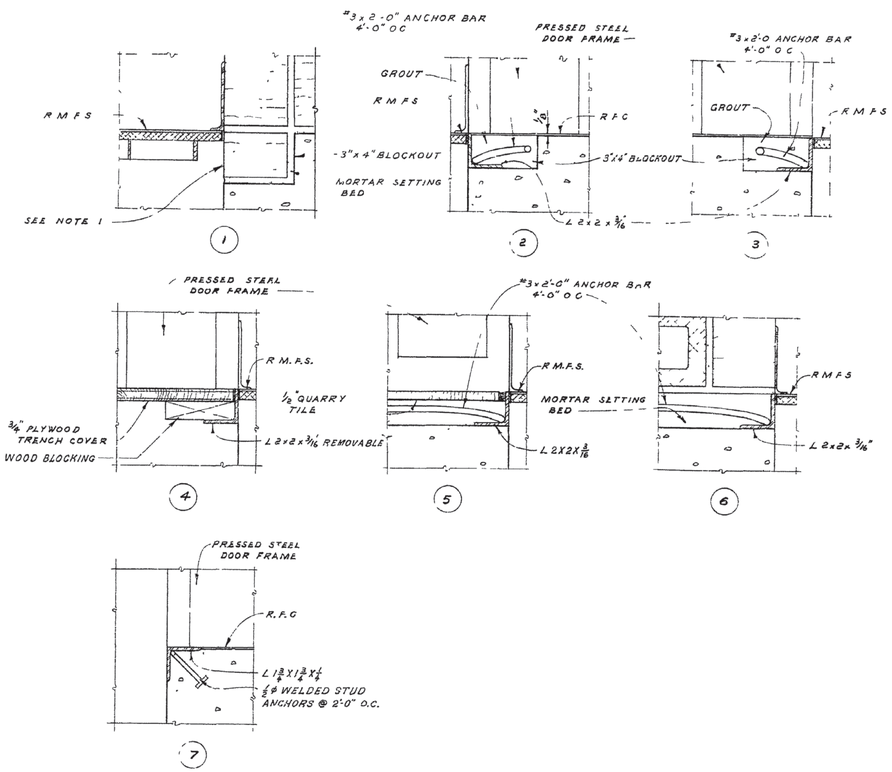

0 3 6 9 12
SCALE OF INCHES

NOTES

1. SINGLE MASONRY COURSE SHALL BE INSTALLED TO INSURE HORIZONTAL ALINEMENT AND VERTICAL CONTROL. NOR INSTALLATION OF RAISED METAL FLOOR SYSTEM AND TO MAKE TRIMMING OF FLOOR PANELS UNNECESSARY.

C-10-75 D-W.J.C.	AS BUILT BY 732, LTR 1-25-74

ALWAYS THINK SAFETY

UNITED STATES
DEPARTMENT OF THE INTERIOR
BUREAU OF RECLAMATION

PICK-SLOAN MISSOURI BASIN PROGRAM
TRANSMISSION DIVISION - WYOMING

SUPERVISORY CONTROL BUILDING
ARCHITECTURAL
FLOOR PLAN AND DETAILS

DESIGNED W.J. C.D.B. SUBMITTED George Lounge
DRAWN W.J. RECOMMENDED Jack W. Hilf
CHECKED APPROVED DIRECTOR OF DESIGN & CONSTRUCTION
DENVER, COLORADO, MAR 17, 1971 SHEET 9 OF 10
467-D-1909

50%

GPO 850-970
SEP 9 1969

21" x 36"

M AUG 8 '75

M MAR 2 '78

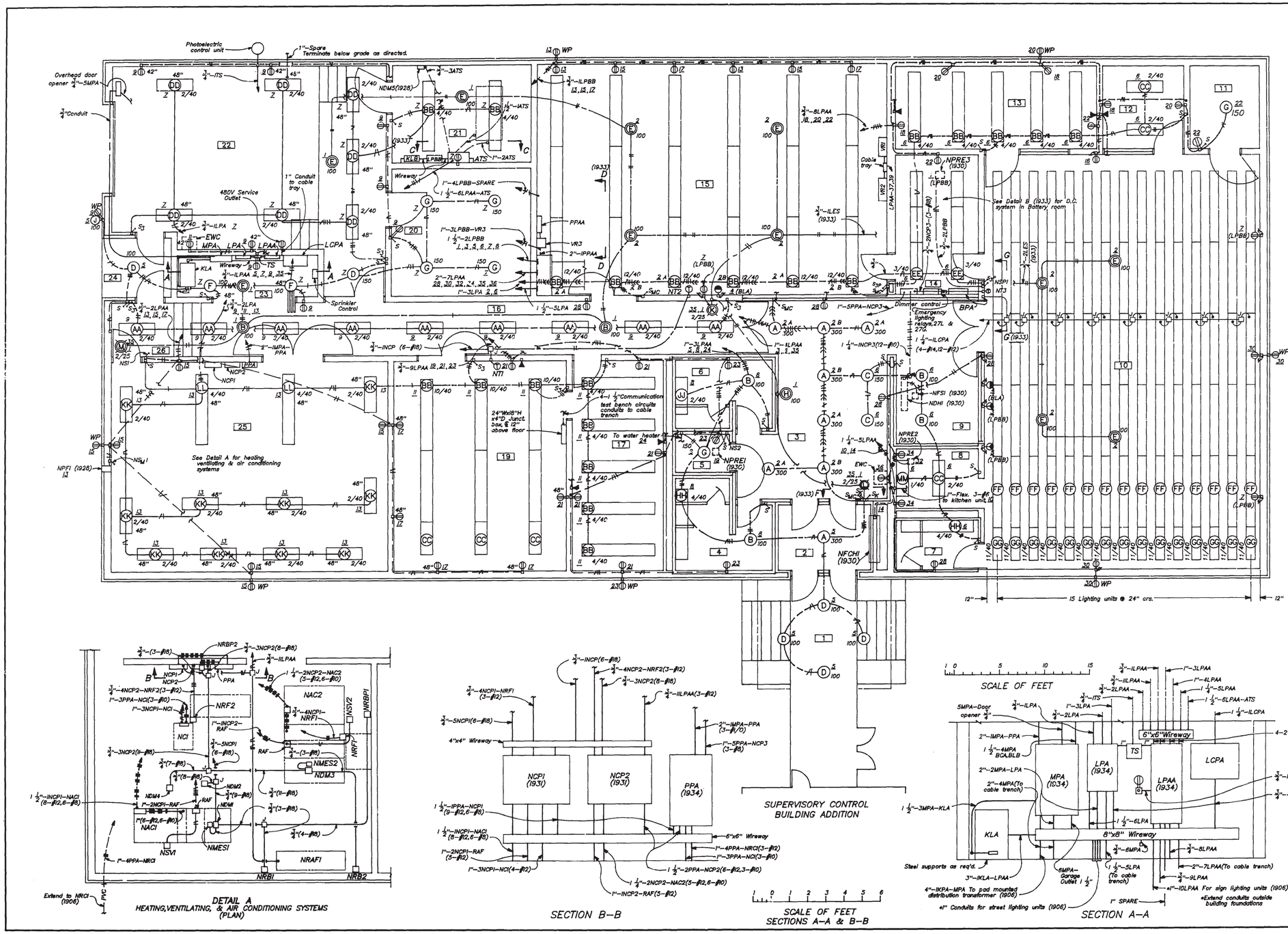

DETAIL A
HEATING, VENTILATING, & AIR CONDITIONING SYSTEMS (PLAN)

SECTION B–B

SUPERVISORY CONTROL BUILDING ADDITION

SCALE OF FEET
SECTIONS A–A & B–B

SECTION A–A

SYMBOLS

- Exposed rigid steel conduit.
- Embedded rigid steel conduit.
- Concealed rigid steel conduit.
- PVC — Buried rigid steel PVC coated conduit
- Cross marks indicate phase conductors, slant mark indicates neutral conductor, and curve marks indicate control conductors.
- Ground cable.
- 300 (A) Incandescent or mercury lighting fixture.
- 2/40 (AA) 18" 100 Fluorescent lighting fixture.
- (E) D.C. Emergency lighting fixture.
- 2/25 (L) Incandescent A.C.–D.C. exit light. Letter in symbol refers to fixture type and numbers beside symbol indicate number and wattage of lamps and mounting distance below ceiling for suspended fixtures.
- Duplex plug receptacle.
- WP Single weatherproof plug receptacle.
- Single heavy duty plug receptacle, 20A, 125V, 3W , 2P.
- Polarized 125 volt D.C. receptacle.
- (T) Thermostat.
- Telephone outlet, install 12" above floor.
- S Single pole switch.
- S_3 Three way switch.
- S_{3P} Three way switch with pilot light.
- S_{MC} Momentary contact switch, 3 position, 2 circuit with center position off
- S_K Single pole switch, key operated.
- 4 Underlined numbers indicate circuit breaker numbers.
- Indicates conduit entering bottom of box.
- Indicates 1" conduit from bottom of box to cable trench or raised floor.
- (19.30) Reference drawing.
- Indicates conduit extending to panelboard.
- 1"–2LPAA Indicates conduit size and designation.
- NFCHI Indicates heating, ventilating and air conditioning equipment.
- J Junction box.

NOTES

Conduit shall be 3/4" and wiring shall be No. 12AWG unless otherwise indicated on panelboard schedules.
All wiring shall be installed in rigid steel conduit or in cable trenches.
For general installation requirements re'er to "Field Procedures for Electrical Installations."
Extend 1" empty conduit from each telephone outlet to cable trench or raised floor area.

REFERENCE DRAWINGS

ELECTRICAL SYSTEMS SECTIONS AND DETAILS	467–D–1933
PANELBOARD SCHEDULES	467–D–1934
HEATING, VENTILATING AND AIR CONDITIONING SYSTEMS	467–D–1928 THRU–1931
PLOT PLAN	467–D–1906
MAIN DISTRIBUTION PANELS	467–D–2151
EMERGENCY LIGHTING SCHEMATIC & DETAIL WIRING	467–703–2588
ELECTRICAL SYSTEMS SINGLE LINE DIAGRAM	467–703–2612

GEN. REV'S

12–11–84 D–D.W.E.	Added Breezeway That Connects The Casper Control Center With New Addition.

ALWAYS THINK SAFETY

UNITED STATES
DEPARTMENT OF THE INTERIOR
BUREAU OF RECLAMATION
PICK–SLOAN MISSOURI BASIN PROGRAM
TRANSMISSION DIVISION – WYOMING

SUPERVISORY CONTROL BUILDING
ELECTRICAL SYSTEMS
PLAN, SECTIONS AND DETAILS

DESIGNED _____ SUBMITTED C.C. Harvey
DRAWN Prof. Tech. Resources RECOMMENDED Howard L. Tirgrath
CHECKED C.C. Harvey APPROVED George Evans
CHIEF, STRUCT. AND ARCH. BRANCH

DENVER, COLORADO MARCH 17, 1971 | 467–D–1932

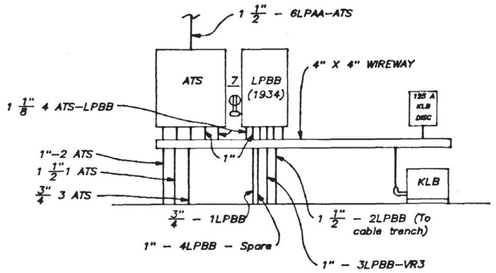

SECTION C-C
(1932)

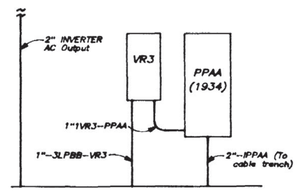

SECTION D-D
(1932)

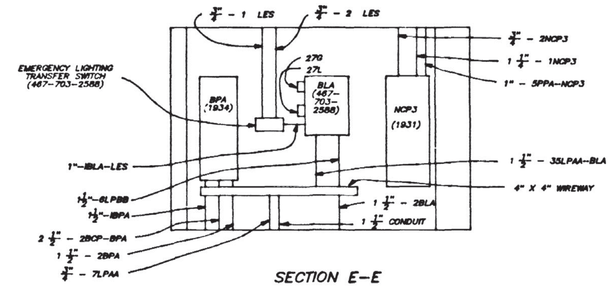

SECTION E-E

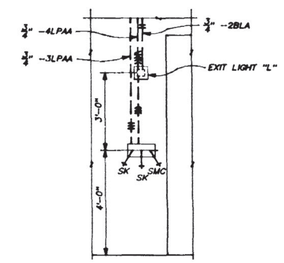

SECTION F-F

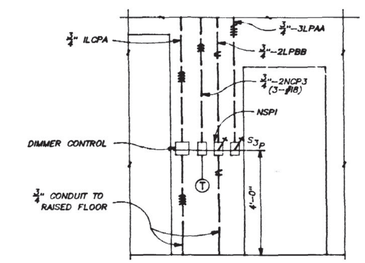

SECTION G-G

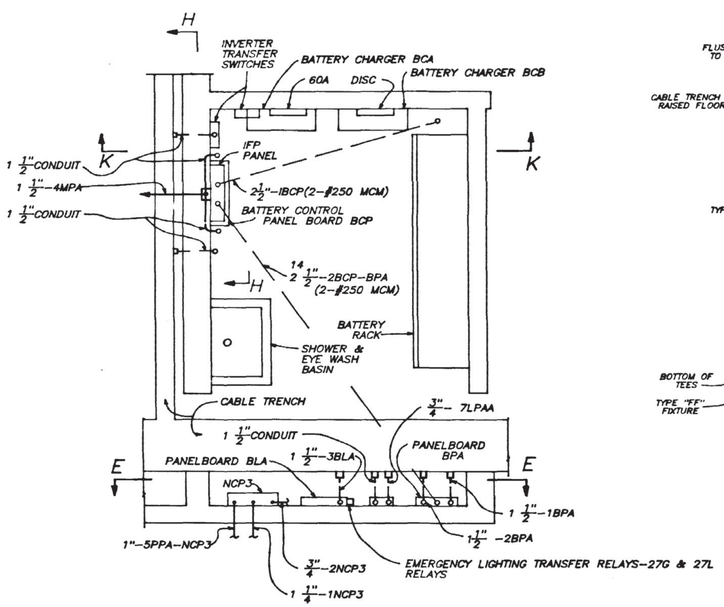

DETAIL B
(PLAN - BATTERY ROOM)
48 V & 129 V D.C. SYSTEMS

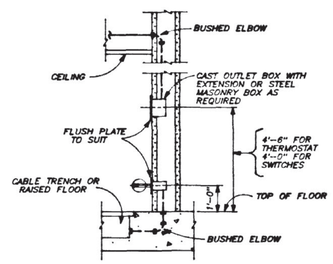

DETAIL C
TYPICAL OUTLET BOX INSTALLATION
NO SCALE

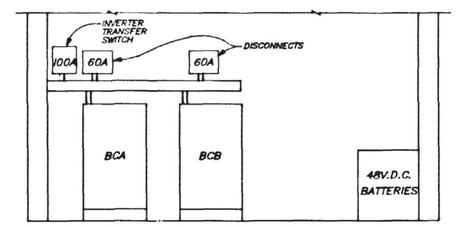

SECTION K-K

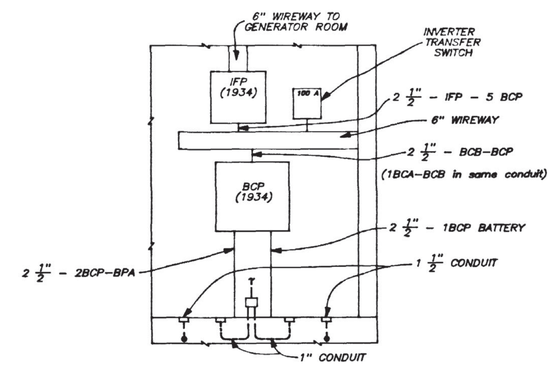

SECTION H-H

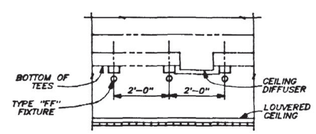

DETAIL D
LOUVERED CEILING
LIGHTING INSTALLATION
NO SCALE

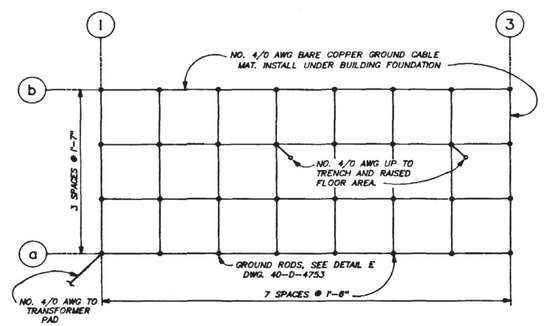

GROUND MAT PLAN
NO SCALE

1 0 1 2 3 4 5
SCALE OF FEET
ALL SECTIONS AND DETAILS

2-7-86 C.C.	AS BUILT BY 703, SINGLE-LINE NOW ON 467-703-2612

ALWAYS THINK SAFETY

UNITED STATES
DEPARTMENT OF THE INTERIOR
BUREAU OF RECLAMATION
PICK-SLOAN MISSOURI BASIN PROGRAM
TRANSMISSION DIVISION - WYOMING

SUPERVISORY CONTROL BUILDING
ELECTIRCAL SYSTEMS
SECTIONS & DETAILS

DESIGNED ____ SUBMITTED C.C. Harvey
DRAWN Prof. Tech. Resources RECOMMENDED Howard L. Tirgrath
CHECKED C.C. Harvey APPROVED George Evans
CHIEF, STRUCT. AND ARCH. BRANCH

DENVER, COLORADO MARCH 17, 1971 | 467-D-1933

467-703-2628

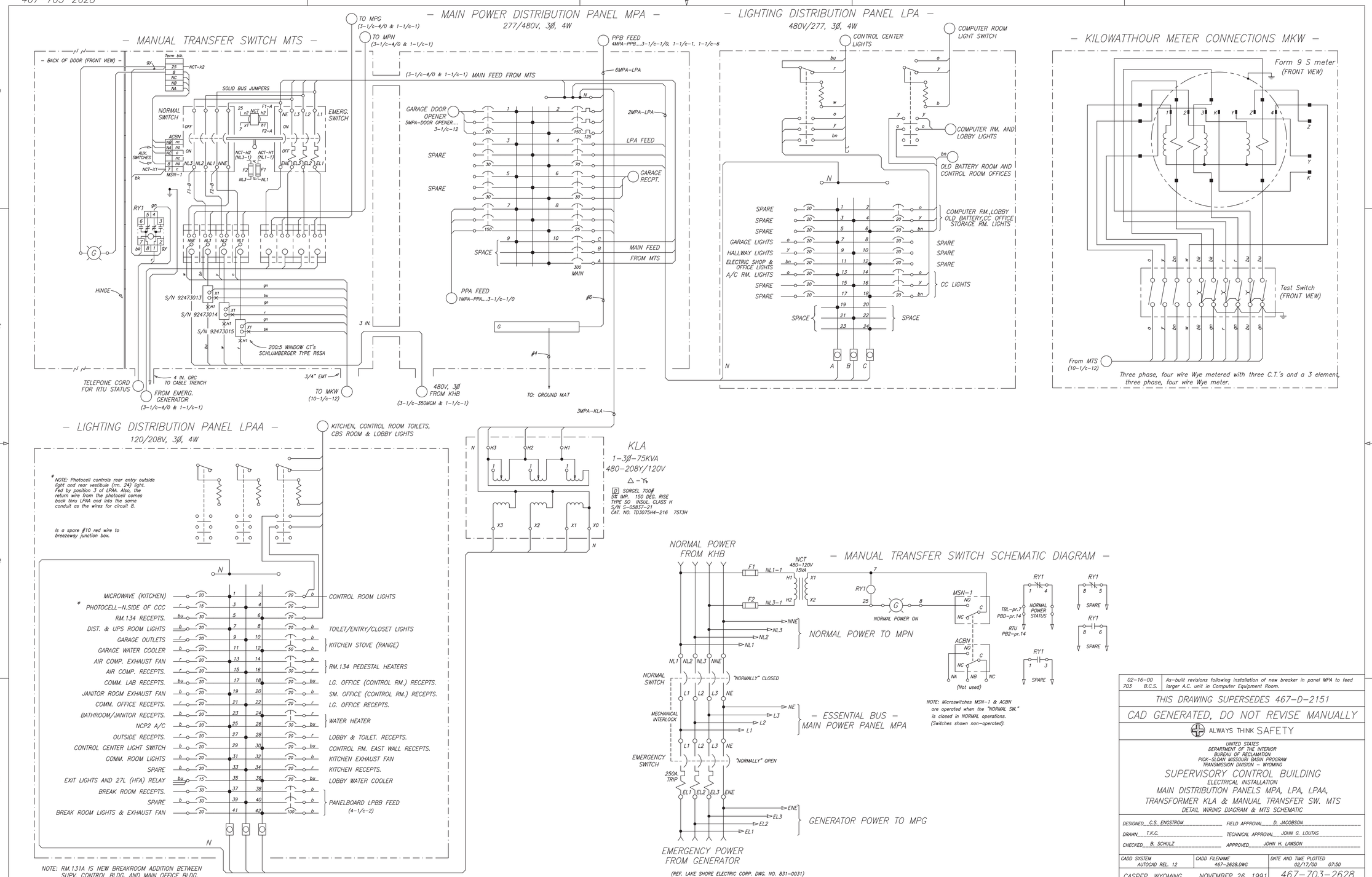

02-16-00 703 B.C.S.	As-built revisions following installation of new breaker in panel MPA to feed larger A.C. unit in Computer Equipment Room.	

THIS DRAWING SUPERSEDES 467-D-2151

CAD GENERATED, DO NOT REVISE MANUALLY

ALWAYS THINK SAFETY

UNITED STATES
DEPARTMENT OF THE INTERIOR
BUREAU OF RECLAMATION
PICK-SLOAN MISSOURI BASIN PROGRAM
TRANSMISSION DIVISION - WYOMING

SUPERVISORY CONTROL BUILDING
ELECTRICAL INSTALLATION
MAIN DISTRIBUTION PANELS MPA, LPA, LPAA,
TRANSFORMER KLA & MANUAL TRANSFER SW. MTS
DETAIL WIRING DIAGRAM & MTS SCHEMATIC

DESIGNED C.S. ENGSTROM FIELD APPROVAL D. JACOBSON
DRAWN T.K.C. TECHNICAL APPROVAL JOHN G. LOUTAS
CHECKED B. SCHULZ APPROVED JOHN H. LAWSON

CADD SYSTEM	CADD FILENAME	DATE AND TIME PLOTTED
AUTOCAD REL. 12	467-2628.DWG	02/17/00 07:50
CASPER, WYOMING	NOVEMBER 26, 1991	467-703-2628

(22x34)

SECURITY PROJECT CABLES			
LABEL	CABLE	AWG	DESIGNATION
DD	RS-422/485	22	2 PR
DE	CARD READER	22	9C
GP	MULTI PURPOSE	22	6C
PI	MULTI PURPOSE	18	2C
VA	COAXIAL CABLE	20	RG-59/U

NOTES:
1. EXISTING 2 1/2" CONDUIT PATH TO MOBILE MAINT. BLDG CAMERA. 2 1/2" CONDUIT RUNS THROUGH EMBEDDED 8" CONDUIT TO PULLBOX E-2
2. EXISTING 2" CONDUIT PATH TO AREA OFFICE BLDG. TELEPHONE ROOM. (SEE NOTE 1, 7-E-00-201)
3. APPROXIMATE LOCATION OF FIBER TERMINATION POINT, MOBILE MAINT. BLDG CAMERA
4. (5) 8" EMBEDDED CONDUITS TO PULLBOX E-2
5. 3/4" EMT TO OH TRAY ROUTE CABLING TO MAIN SEC. RACK.
6. PENETRATE WALL TO JUNCTION BOX, FIRESTOP AS NEEDED

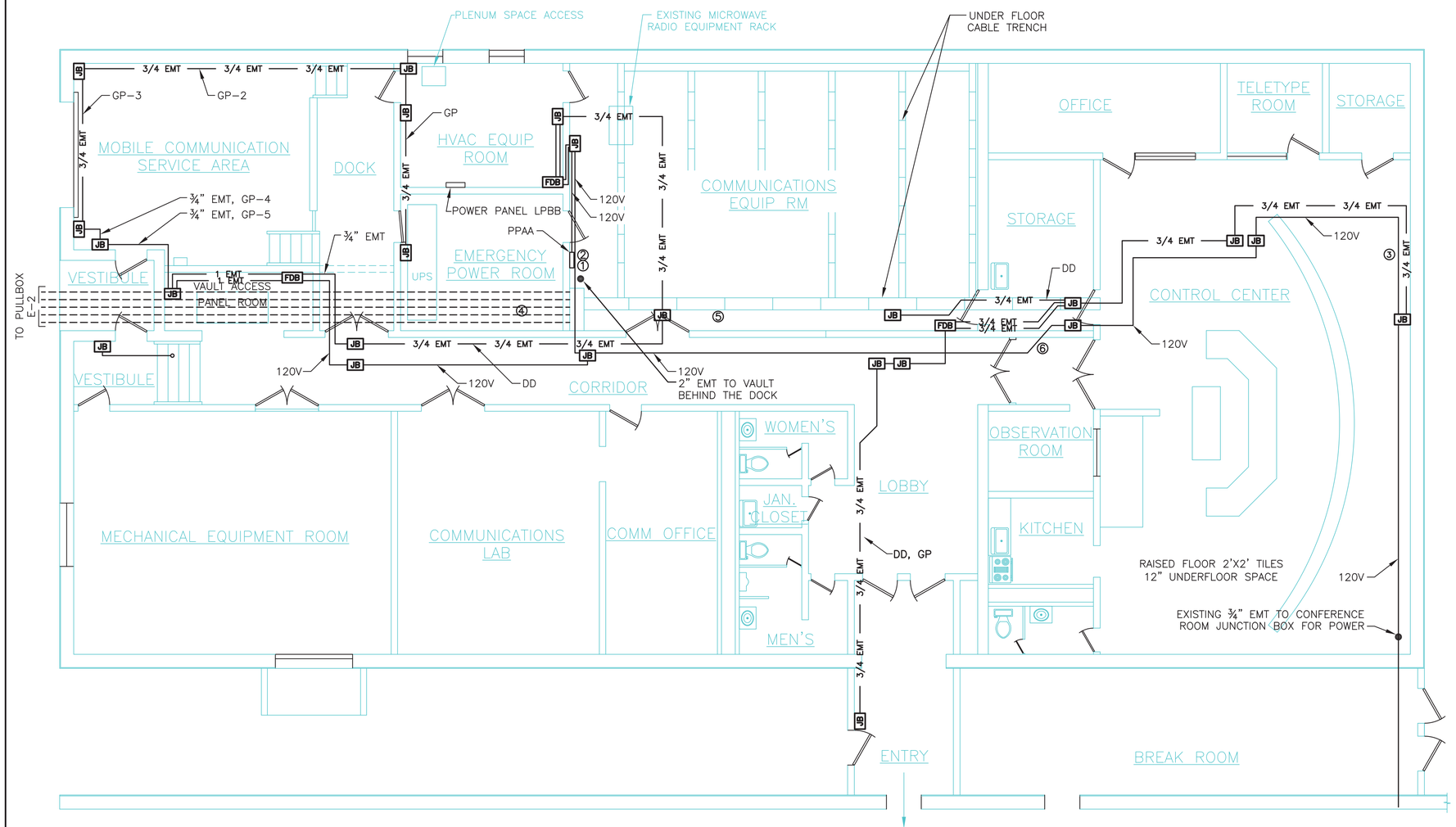

A
7-E-06-202

CASPER CONTROL CENTER BUILDING
SCALE: 3/16"=1'-0"

REVISION	DESCRIPTION	DATE
1	GENERAL REVISION	11/13/08
2	AS BUILT	12/09/08

05/09/2011 600
ACCEPTED: JOHN FREETLY, PE
JOHN FREETLY, PE

SIM-G TECHNOLOGIES
7-E-06-202 12/09/2008
CONTRACT NO. 07CC811344, RSN-26

FOUO
HIGHLY SENSITIVE

SIM-G TECHNOLOGIES

ALWAYS THINK SAFETY

UNITED STATES
DEPARTMENT OF THE INTERIOR
BUREAU OF RECLAMATION
GREAT PLAINS DISTRICT

WYOMING / MONTANA – CASPER

SECURITY UPGRADE
CASPER CONTROL CENTER BUILDING
CONDUIT AND CABLE LAYOUT

DESIGNED EG CHECKED MDH
DRAWN LLB TECH. APPR. SLF
APPROVED PRM
PROJECT MANAGER – SECURITY CONTRACTOR

CADD SYSTEM	CADD FILENAME	DATE PLOTTED
AutoCADD	7-E-06-202.dwg	11-17-2009
WYOMING/MONTANA	June 23, 2008	7-E-06-202

20-600-3812

TYPICAL DETAIL OF GROUNDING METAL CONDUITS

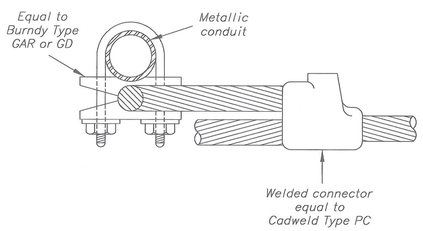

METAL CONDUIT GROUNDING TABLE			
CONDUIT SIZE	MINIMUM SIZE OF GROUND CABLE	NUMBER OF TAPS	CLAMP SIMILAR TO BURNDY TYPE
$\frac{3}{4}$" to $1\frac{1}{2}$"	No.4 A.W.G.	1	GAR
2" to 3"	No.1 A.W.G.	1	GAR
Above 3"	No.1 A.W.G.	2	GD

FIGURE 1 DWG 40–D–4334

TYPICAL DETAIL OF BONDING CONDUITS AROUND JUNCTION BOXES

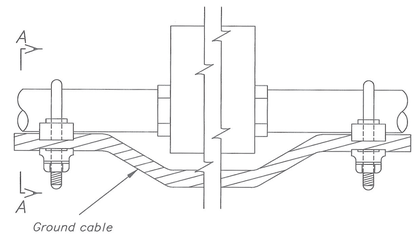

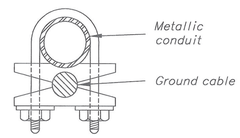

SECTION A–A

NOTE
CLAMPS SHALL BE EQUAL TO BURNDY TYPE GAR OR GD AND BARE COPPER CABLE IN ACCORDANCE WITH THE TABLE IN FIGURE 1 OR A BONDING JUMPER EQUAL TO O.Z. TYPE BJ (WITH BRONZE FITTINGS) MAY BE USED.

FIGURE 3 DWG 40–D–4334

TYPICAL DETAIL OF CROSSING EXPANSION AND CONTRACTION JOINTS WITH GROUNDING CABLE

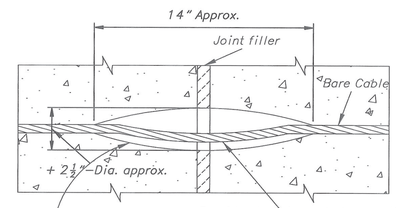

Provide slack in cable to permit $\frac{1}{2}$" additional opening at joint

Recess to be formed in concrete by wrapping cable loosely with asphalt saturated cotton fabric and given a heavy coating of asphaltum.

+ This dimension is approximate for No. 4/0 cable only. For larger cables, increase diameter of wrapping accordingly

NOTE
THE CROSSING OF EXPANSION JOINTS WITH EMBEDDED GROUND CABLE SHOULD BE AVOIDED WHENEVER POSSIBLE. THE EMBEDDED GROUNDING SYSTEM FOR EACH UNIT OR BLOCK SHOULD BE SELF CONTAINED.

FIGURE 5 DWG 40–D–4334

TYPICAL GROUNDING DETAILS FOR THREE PHASE BUS STRUCTURE

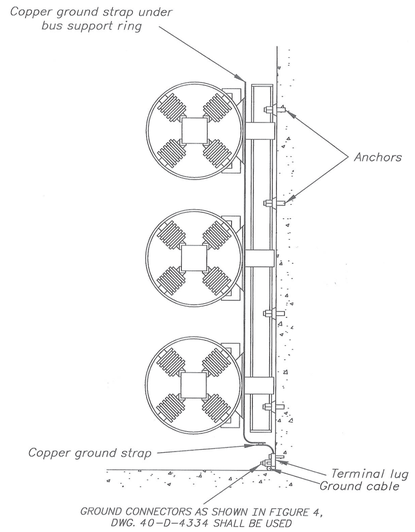

FIGURE 7 DWG 40–D–4334

TYPICAL DETAIL OF BONDING CONDUITS AT EXPANSION JOINTS

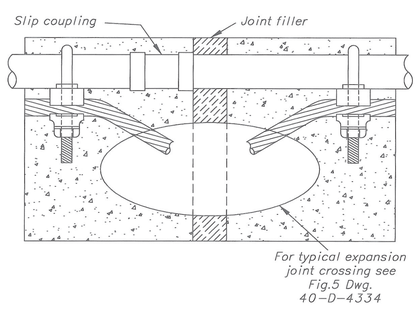

NOTE
CLAMPS SHALL BE EQUAL TO BURNDY TYPE GAR OR GD AND BARE COPPER CABLE IN ACCORDANCE WITH THE TABLE IN FIGURE 1 OR A BONDING JUMPER EQUAL TO O.Z. TYPE BJ (WITH BRONZE FITTINGS) MAY BE USED.

FIGURE 2 DWG 40–D–4334

TYPICAL DETAIL FOR EMBEDDED GROUND CONNECTOR WITH EQUIPMENT GROUND CABLE

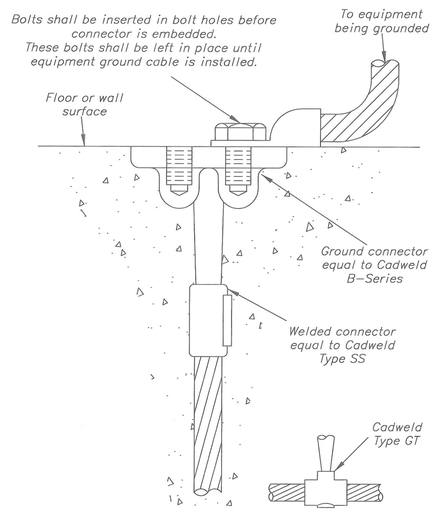

SIDE VIEWS

FIGURE 4 DWG 40–D–4334

NOTES

1. Ground cables for connection to equipment shall be of sufficient length to bolt to equipment when ultimately installed. Terminations as shown in Figure 4 Dwg 40–D–4334 shall be used in lieu of stubouts. Approximate locations only are shown on drawings. Exact locations to be determined in field.

2. Refer to conduit drawings or general arrangement drawings whenever available, for more exact location of equipment.

3. Metal conduits shall be grounded at both ends. If a break occurs in a run of metal conduit, the conduit shall be bonded across the break. In case the above is not feasible, the each section shall be grounded separately. Each contractor shall ground each metal conduit run, or portion therof, that he installs. Junction or pull boxes not containing protective equipment in which the conduits are installed with a locknut and bondnut shall not be considered a break when the voltage is below 240 volts to ground, but shall be so considered for higher voltages. All junction or pull boxes in runs of non–metallic conduit shall be individually grounded. All boxes containing overload protective devices shall be individually grounded.

4. Ground cable shall be No.4 A.W.G. or larger.

5. All paint, enamel, and scale shall be removed from point of contact on metal surfaces before applying ground connections.

6. All bolts, machine screws, nuts and washers used in making grounding connections shall be copper alloy, similar to Everdur or stainless steel.

7. Cable shields and one conductor of multiconductor cable shall be grounded at both ends.

(For continuation of notes see title sheet of Dwg. 40–D–4334.)

FIGURE 6 DWG 40–D–4334

NOTES

(Continued from Fig. 6)

8. Thermoweld, Cadweld, or an approved equivalent process shall be used in making connections between cables where embedded in concrete, direct buried, or under plant superstructure.

9. Where Thermoweld, Cadweld, or an approved equivalent process is used it shall be performed with heavy duty welding equipment in accordance with manufacturer's instructions and the material shall be new fresh stock.

10. For ground symbols see title sheet of Dwg. 40–D–4335.

REFERENCE DRAWINGS

TYPICAL GROUNDING DETAILS – SHEET NO.2 _ _ _ 40–D–4335

THIS DRAWING AND DRAWING 40–D–4335 SUPERSEDES IN PART DRAWING 40–D–4336, 01–14–2003

3 – 10 – 00 D – L.G.	REDRAWN IN AUTOCAD R.14 FORMAT
12 – 2 –85 D – G.D.O.	REVISED TO SHOW CURRENT PRODUCTS OR PRACTICES.

ALWAYS THINK SAFETY

UNITED STATES
DEPARTMENT OF THE INTERIOR
BUREAU OF RECLAMATION
STANDARD DESIGNS

ELECTRICAL STANDARDS

TYPICAL GROUNDING DETAILS

DRAWN R.Y.N. – S.J.S. SUBMITTED D. CLARK
TRACED J.M.H. RECOMMENDED H.H. PLUMB
CHECKED V.N.P. – R.F.H. – T.J.L. APPROVED L.N. McCLELLAN
ACTING CHIEF ENGINEER

CADD SYSTEM	CADD FILENAME	DATE AND TIME PLOTTED
AutoCAD Rel. 15.06s (LMS Tech)	40D4334.DWG	MAY 1, 2003 13:51

DENVER, COLORADO MAY 1, 1947 SHEET 1 OF 2 40–D–4334

FIGURE 1

GROUND MATS

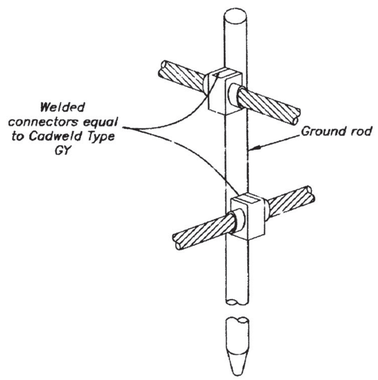

GROUND ROD DETAILS

FIGURE 2

GROUND MATS

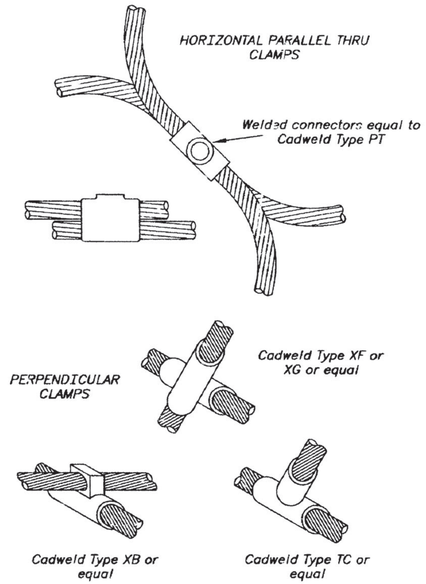

FIGURE 3

LIGHTING OR MISC POWER CABINETS

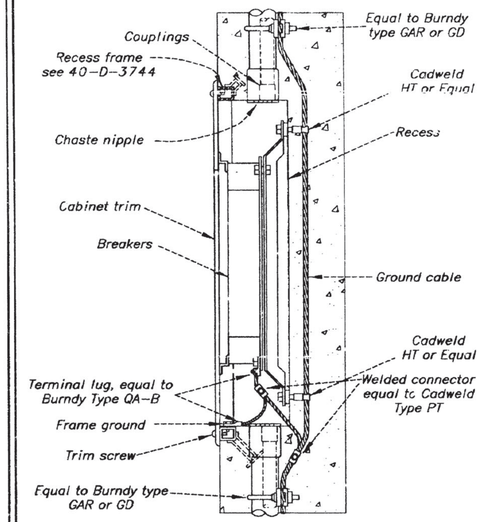

SECTIONAL ELEVATION

FIGURE 4

RAILS

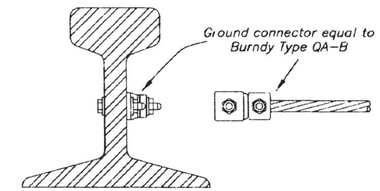

EXPOSED INSTALLATION

CONNECTION TO RAIL

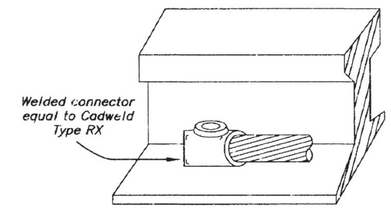

EMBEDDED INSTALLATION

CONNECTION TO RAIL

NOTES

1. See drawing 40-D-4334 for notes and list of reference drawings.

GROUND SYMBOLS

(Used on Plan Drawings)

- Indicates ground cable embedded in concrete
- Indicates ground cable concealed but not embedded in concrete
- Indicates ground cable exposed
- Indicates ground rod
- Indicates ground connection
- Indicates ground cable riser
- Indicates embedded ground plate

FIGURE 5

FLOOR FRAMES

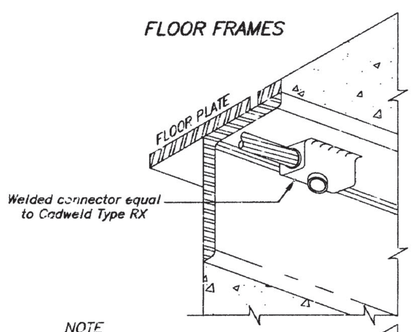

NOTE
WELD CONNECTOR WITH ANGLE INVERTED PRIOR TO PLACING FRAME IN FINAL POSITION.

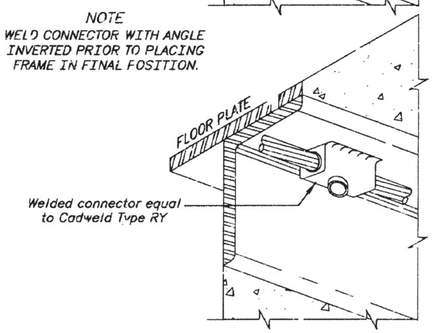

FIGURE 6

RAILING POST BASES AND HANDRAIL SUPPORTS

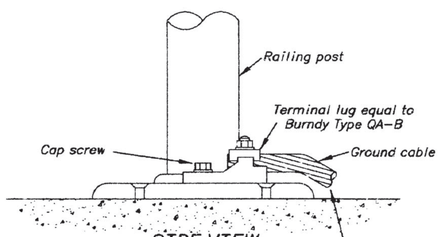

SIDE VIEW

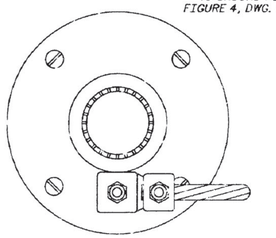

PLAN VIEW

CONNECTION TO RAILING POST BASE

(DETAILS FOR GROUNDING HANDRAIL SUPPORTS ARE SIMILAR)

FIGURE 7

OIL TANK GROUNDING DETAILS

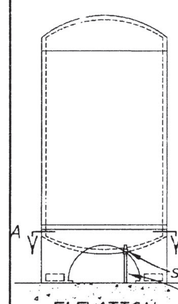

ELEVATION

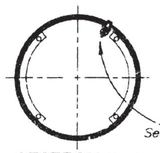

SECTION A-A

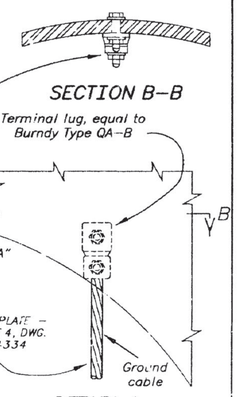

DETAIL A

FIGURE 8

CONTROL CABLE SHIELD

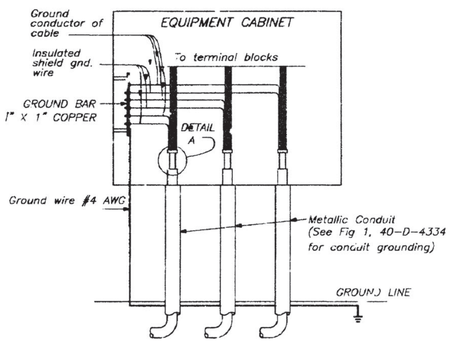

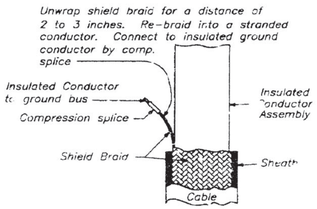

DETAIL A

LONGITUDINAL CABLE SECTION

REFERENCE DRAWINGS

ELECTRICAL INSTALLATION – TYPICAL GROUNDING DETAILS (SHT 1 OF 2) 40-D-4334

REV. NO		
3	2004-07-06 D - MRG	MINOR REVISIONS; ADDED FIG.'S 2 AND
	3 - 10 - 00 D - L.G.	REDRAWN IN AUTOCAD R.14 FORMAT
	12 - 2 -85 D - G.D.O.	REVISED TO SHOW CURRENT PRODUCTS OR PRACTICES.

THIS DRAWING SUPERSEDES DRAWING 40-D-4336 IN PART (2003-01-14); AND DRAWING 104-D-944 (2004-07-06)

ALWAYS THINK SAFETY

UNITED STATES
DEPARTMENT OF THE INTERIOR
BUREAU OF RECLAMATION

STANDARD DESIGNS

ELECTRICAL INSTALLATION

TYPICAL GROUNDING DETAILS

DRAWN R.Y.N. - S.J.S. SUBMITTED D. CLARK
TRACED J.M.H. RECOMMENDED H. H. PLUMB
CHECKED J.N.P. R.F.H. J.J.L. APPROVED L. N. McCLELLAN
ACTING CHIEF ENGINEER

DENVER, COLORADO APRIL 24, 1947 SHEET 2 OF 2

40-D-4335

FOR OFFICIAL USE ONLY

CAD SYSTEM AutoCAD Rel. 16.0a
CAD FILENAME 40-D-4335.DWG
DATE AND TIME PLOTTED JUNE 30, 2004 14:31
PLOTTED BY DCBWTOR

Released

SAMPLE NAMEPLATES

STRAINER DRAIN

EXTENDED TYPE

STRAINER
DRAIN

COMPACT TYPE

FIRE PROTECTION
WATER SUPPLY
CAUTION
2 1/2" OUTLET FOR FIRE
DEPARTMENT USE ONLY

INSCRIPTION AND CLOSE RANGE
INFORMATIONAL LETTERING

GOTHIC LETTERING CHART

NORMAL (Avg. width .271")
1/4" ABCDEFGHIJKLMN
ABCDEFGHIJKLMNOP
CONDENSED (Avg. width .234")

NORMAL (Avg. width .203")
3/16" ABCDEFGHIJKLMNOPQR
ABCDEFGHIJKLMNOPQRSTU
CONDENSED (Avg. width .175")

NORMAL (Avg. width .163")
5/32" ABCDEFGHIJKLMNOPQRSTUV
ABCDEFGHIJKLMNOPQRSTUVWXYZ
CONDENSED (Avg. width .140")

NORMAL (Avg. width .135")
1/8" ABCDEFGHIJKLMNOPQRSTUVWXYZ
ABCDEFGHIJKLMNOPQRSTUVWXYZ
CONDENSED (Avg. width .116")

NORMAL (Avg. width .103")
3/32" ABCDEFGHIJKLMNOPQRSTUVWXYZ
ABCDEFGHIJKLMNOPQRSTUVWXYZ
CONDENSED (Avg. width .086")

*Average widths listed include spacing between letters.

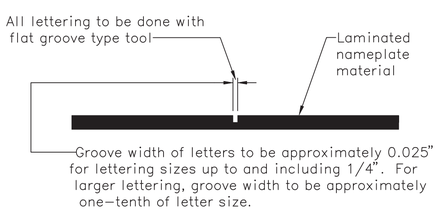

LETTERING DETAIL

SIZES AND LETTER SPACING OF NAMEPLATES

FOR DIMENSIONS SEE TABLES 1 & 2

TABLE 1
WIDTH

TABLE FOR ALL LETTERING THE SAME SIZE

GOTHIC LETTER SIZE	NO. OF LINES 1 W	1 B	2 W	2 S	2 B	3 W	3 S	3 B
1/4	1.00	.375	1.25	.15	.30	1.75	.15	.35
3/16	.75	.28	1.00	.11	.26	1.25	.11	.23
5/32	.50	.17	.75	.08	.18	1.00	.09	.18
1/8	.50	.19	.75	.08	.21	1.00	.08	.23
3/32	.50	.20	.50	.07	.12	.75	.08	.15

Dim. in inches

For other lettering sizes, more than three lines, or various size lettering on same nameplate, arrange width as follows:

Space(S)=Average of letter sizes on each side of space x 0.6.

Border(B)=Largest lettering size on name-plate x 1.2 + half of odd amounts to give total width(W) to even 1/4".

TABLE 3
STANDARD NAMEPLATES
FOR ELECTRICAL EQUIPMENT ONLY

NAMEPLATE SIZE NO.	NAMEPLATE DIMENSIONS L	W	B	LETTERING SIZE
1	1 1/8	7/16	1/16	3/32
2	1 1/2	9/16	1/8	3/32
3	1 3/4	5/8	1/8	1/8
4	2 1/4	3/4	1/8	3/16
5	3	1	7/32	3/16
6	4	1 1/4	1/4	1/4
7	6	1 3/4	1/4	1/2

Above nameplates shall be used for electrical equipment unless otherwise specified.

Dim. in inches

TABLE 2
LENGTH

LETTERING SIZE ON LONGEST LINE (NORM=NORMAL; COND=CONDENSED)

Dim. in inches

NO.OF LETTERS AND SPACES	1/4 NORM	1/4 COND	3/16 NORM	3/16 COND	5/32 NORM	5/32 COND	1/8 NORM	1/8 COND	3/32 NORM	3/32 COND
1	3	3	3	3	3	3	3	3	3	3
2										
3										
4										
5										
6										
7	3 1/2									
8		3 1/2								
9	4		3 1/2							
10		4								
11	4 1/2			3 1/2						
12	5	4 1/2	4		3 1/2					
13										
14	5 1/2	5	4 1/2	4		3 1/2	3 1/2			
15					4					
16	6									
17		5 1/2	5	4 1/2		4		3 1/2		
18	6 1/2				4 1/2		4			
19		6	5 1/2	5					3 1/2	
20	7									
21		6 1/2			5	4 1/2		4		
22	7 1/2		6	5 1/2			4 1/2			
23		7								
24	8		6 1/2		5 1/2	5	5	4 1/2	4	3 1/2
25	8 1/2	7 1/2		6						
26										

For other lettering sizes or longer nameplates, use the following formula:

L = A(N+n) + 2M (Nameplate length cut to nearest 1/2").

L – Length of nameplate.
A – Average letter width on longest line.
N – Number of letters on longest line.
n – Number of spaces on longest line
M – Margin=Average letter width plus 5/8".

MOUNTING OF NAMEPLATES

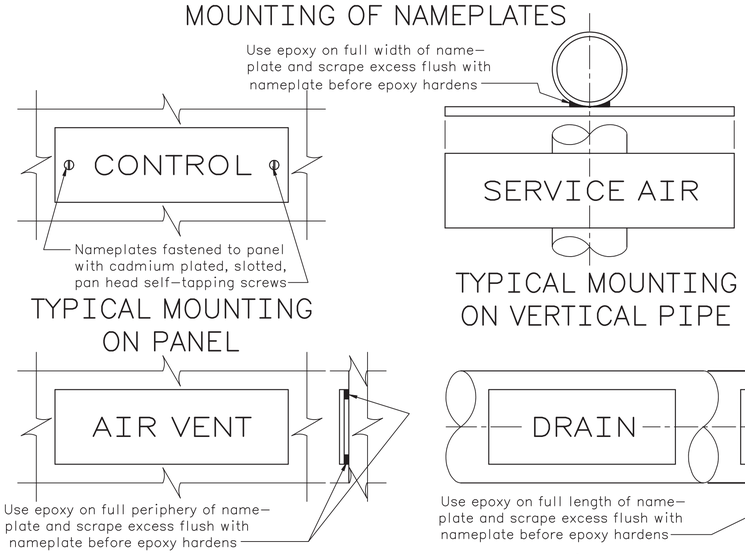

TYPICAL MOUNTING ON PANEL

TYPICAL MOUNTING ON VERTICAL PIPE

TYPICAL MOUNTING ON CONCRETE WALL

TYPICAL MOUNTING ON HORIZONTAL PIPE

DRILLING OF NAMEPLATES

(For panel mounting only)

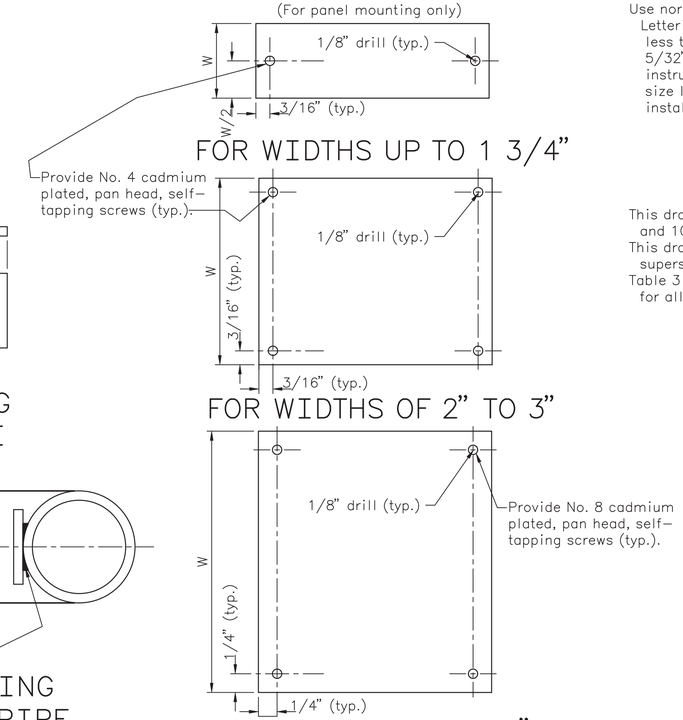

FOR WIDTHS UP TO 1 3/4"

FOR WIDTHS OF 2" TO 3"

FOR WIDTHS OVER 3"

NAMEPLATE MATERIAL

NOTE – All nameplate material shall be suitable for exposure to direct sunlight without detrimental fading.

TYPE A – Material shall be laminated phenolic resin sheets 1/16" or 3/32" thick (as specified) opaque black surface, white layer adjacent to surface layer, buffed or satin finish. Sheets to be cut to size with square edges. Engraving to cut through black surface to white layer. Shall conform to Military Specification MIL – P – 78A and Federal Specification L–P–509a.

TYPE B – Same as Type A except Chinese red surface or equivalent.

TYPE C – Same as Type A except 1/8", 3/16", or 1/4" thick (as specified).

TYPE D – Same as Type A except Chinese red surface or equivalent and 1/8", 3/16", or 1/4" thick (as specified).

NAMEPLATE USES

TYPE A – For panel mounting with self–tapping screws. For concrete wall or other flat mounting to identify valves, equipment, etc. Mount with epoxy cement–indoors or outdoors.

TYPE B – Red nameplates are restricted to uses such as fire protection equipment, warning inscriptions, and emergency devices. Methods of mounting shall be the same as for Type A.

TYPE C – For mounting on non–flat surface with epoxy cement.

TYPE D – Restricted to uses such as fire protection, equipment warning inscriptions, and emergency devices. For mounting on non–flat surfaces with epoxy cement.

LETTERING

Use normal or condensed letter types shown on the Gothic Lettering Chart. The normal size of lettering shall be not less than 3/16" high (1/4" preferred), except that 5/32" and smaller may be used for information and instructions that may be read at close range. Larger size lettering may be specified for out–of–doors installations or where necessary.

NOTES

This drawing supersedes Drawings No. 40–D–5173, 106–D–341, and 106–D–342.

This drawing and Drawings No. 40–D–6124, –6130, and –6187 supersede Drawing No. 40–D–2567.

Table 3 for ELECTRICAL EQUIPMENT ONLY, Tables 1 and 2 for all other equipment.

10 – 13 – 00 D – L.G.	Redrawn in AutoCAD
12 – 11 – 79 D – L.H.	Redrawn
11 – 6 – 70 D – D.A.W.	Add Table 3 and Note

ALWAYS THINK **SAFETY**

UNITED STATES
DEPARTMENT OF THE INTERIOR
BUREAU OF RECLAMATION

STANDARD DESIGNS

STANDARD NAMEPLATES

DESIGNED D.A.W. TECHNICAL APPROVAL C.G.Bates
DRAWN J.M.F. SUBMITTED Jack W. Hilf
CHECKED D.M.B.–S.K.K.–E.M.J. APPROVED B.P.Bellport CHIEF ENGINEER

CADD SYSTEM	CADD FILENAME	DATE AND TIME PLOTTED
AutoCAD Release 12_ c2–a	40D6324.DWG	NOVEMBER 29, 1994 12:28
DENVER, COLORADO	MAY 1970	40–D–6234

FIGURE 1

DIMENSIONS (INCHES) MALLEABLE IRON ONE-HOLE CLAMP

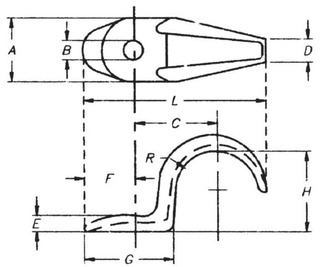

FOR RIGID CONDUIT										
SIZE	A	B	C	D	E	F	G	H	L	R
1/2	21/32	19/64	1 1/16	5/16	7/32	19/32	1 3/16	51/64	2 7/32	27/64
3/4	7/8	5/16	1 9/32	3/8	1/4	3/4	1 3/8	1 21/64	2 15/32	17/32
1	1 1/16	5/16	1 11/32	7/16	5/16	29/32	1 17/32	1 9/32	3 1/8	43/64
1 1/4	1 3/16	13/32	1 11/16	1/2	5/16	1 3/32	1 7/8	1 5/8	3 13/16	27/32
1 1/2	1 5/16	13/32	2	1/2	11/32	1 9/32	2	1 27/32	4 5/16	63/64
2	1 7/16	21/32	2 9/16	5/8	7/16	1 13/16	2 3/8	2 9/32	5 1/4	1 15/64
2 1/2	1 1/2	9/16	3	3/4	9/16	1 3/4	2 13/16	2 13/16	6	1 15/32
3	1 3/4	9/16	3 5/16	7/8	21/32	1 3/8	2 29/32	3 7/16	6 13/16	1 25/32
3 1/2	2	11/16	3 5/8	1	3/4	1 3/4	3 3/16	3 7/8	7 3/4	2 9/32
4	2 1/4	11/16	4 1/2	1 1/4	3/4	2	4 3/32	4 3/8	9 1/16	2 9/32

FOR ELECTRICAL METALLIC TUBING										
SIZE	A	B	C	D	E	F	G	H	L	R
1/2	21/32	1/4	23/64	3/8	9/32	25/32	1	27/32	1 13/16	23/64
3/4	21/32	1/4	1 1/32	3/8	7/32	1/2	1 1/16	29/32	2 1/4	15/32
1	25/32	9/32	1 1/8	3/8	1/4	3/4	1 9/32	1 5/32	2 19/32	19/32
1 1/4	29/32	9/32	1 23/64	3/8	1/4	3/4	1 9/32	1 1/2	3	29/32
1 1/2	7/8	5/16	1 17/32	3/8	1/4	3/4	1 5/16	1 27/64	3 5/16	27/64
2	1	27/64	1 27/32	3/8	5/16	3/4	1 7/16	2 5/32	3 7/8	1 7/64

SUPERSEDES 104-D-262

FIGURE 2

SUPPORTING CONDUIT TO STEEL H BEAM (EXPOSED)

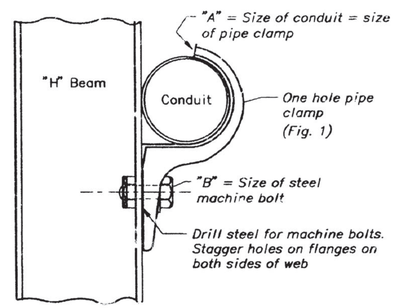

A	B
1/2"	No.12 x 1"
3/4"	1/4" x 1"
1"	1/4" x 1"
1 1/4"	5/16 x 1"
1 1/2"	3/8 x 1"
2"	1/2 x 1 1/2"
2 1/2"	1/2 x 1 1/2"
3"	1/2 x 1 1/2"
3 1/2"	5/8 x 1 1/2"
4"	5/8 x 1 1/2"

SUPERSEDES 104-D-270

FIGURE 3

SUPPORTING CONDUIT ON CONCRETE SURFACE WITH STANDARD ONE-HOLE M.I. PIPE CLAMP

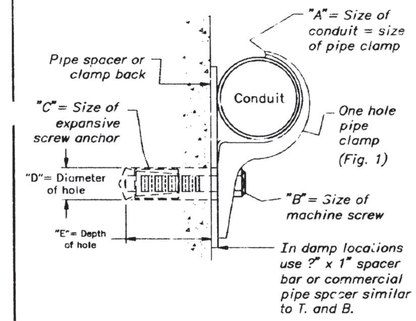

A	B	C *	D	E	NOTE:
1/2"	#12x3/4"	#12x24	1/2"	7/8"	All conduits not otherwise supported shall be held in place by clamps shown above, located at approx. 10 foot intervals.
3/4"	1/4"x1 3/4"	1/4"x20	1/2"	1 1/2"	
1"	1/4"x1 3/4"	1/4"x20	1/2"	1 1/2"	
1 1/4"	5/16"x2"	5/16"x19	5/8"	1 3/4"	
1 1/2"	3/8"x2 1/4"	3/8"x16	3/4"	2"	
2"-2 1/2"-3"	1/2"x2 1/4"	1/2"x13	7/8"	2 1/4"	
3 1/2"-4"	3/8"x3"	3/8"x11	1 1/8"	2 3/4"	

* The expansion screw anchor shall be of corrosion resistant material

SUPERSEDES 104-D-283

FIGURE 4

HIGH VOLTAGE CABLE CONDUIT RISER SUPPORT DETAILS

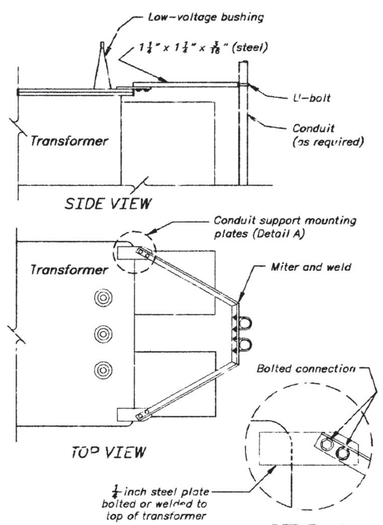

SUPERSEDES 104-D-806

FIGURE 5

MOUNTING CONDUIT TO TUBULAR STEEL STRUCTURE

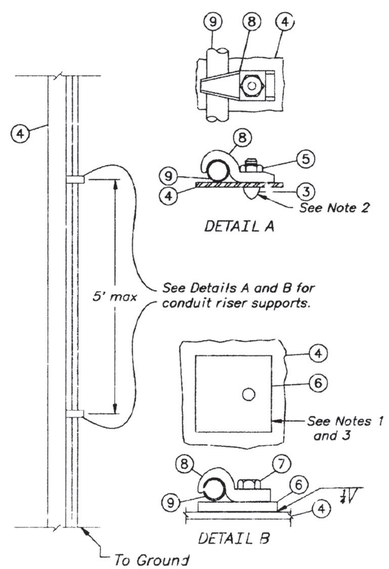

ITEM	DESCRIPTION
1	
2	
3	Power driver threaded stud (3/8" Dia.)
4	Tubular steel structure
5	Self-Locking hex nut (For item 3)
6	Steel plate (1 inch thick)
7	3/8" Dia. U.S. standard bolt (Length as Required)
8	Malleable iron pipe strap (Steel City Type HS)
9	Rigid metallic conduit

NOTES

1. For Detail B the 1" steel plate shall have an area larger than the projected area of the connecting clamp.
2. The 3/8" stud shall be driven into the tubular steel structure with a powder actuated fastening tool equal to Rainset Fastening System, as manufactured by Illinois Tool Works, Wood Dale, IL.
3. The 1" thick steel plate shall be welded to the tubular steel structure and have a 3/4" deep hole drilled and tapped for a 3/8" U.S. standard bolt.

SUPERSEDES 40-D-6309 IN PART

THIS DRAWING SUPERSEDES DRAWINGS AS NOTED IN FIGURES, 2004-09-30.

ALWAYS THINK SAFETY

UNITED STATES
DEPARTMENT OF THE INTERIOR
BUREAU OF RECLAMATION

STANDARD DESIGNS

ELECTRICAL INSTALLATION

CONDUIT CLAMP AND CONDUIT SUPPORTS TYPICAL DETAILS

DESIGNED _____ CHECKED _____
DRAWN _____ TECH. APPR. _____
APPROVED _____ P.E.
MANAGER, ELECTRICAL SYSTEMS GROUP

DENVER, COLORADO 2004-09-30
SHEET 1 OF 1

40-D-7094

CAD SYSTEM AutoCAD R14, 16.0a
CAD FILE NAME 40-D-7094.DWG
DATE AND TIME PLOTTED OCTOBER 4, 2004 11:59
PLOTTED BY NORWOOD

40-D-7096

ALWAYS THINK SAFETY

UNITED STATES
DEPARTMENT OF THE INTERIOR
BUREAU OF RECLAMATION
STANDARD DESIGNS

FACILITY / FEATURE — See Note 1
ELECTRICAL INSTALLATION — See Note 2
DETAIL DRAWING DESCRIPTION – LINE 1
DETAIL DRAWING DESCRIPTION – LINE 2

(Use Current Signature Block ...)

DENVER, COLORADO SHEET 1 OF 1 | DATE | 40-D-XXXX

TITLE BLOCK TYPE A

USE WHEN DRAWING APPLIES TO SPECIFIC TYPE OF ELECTRICAL FEATURE OR FACILITY

ALWAYS THINK SAFETY

UNITED STATES
DEPARTMENT OF THE INTERIOR
BUREAU OF RECLAMATION
STANDARD DESIGNS

ELECTRICAL INSTALLATION — See Note 2
DETAIL DRAWING DESCRIPTION – LINE 1
DETAIL DRAWING DESCRIPTION – LINE 2

(Use Current Signature Block ...)

DENVER, COLORADO SHEET 1 OF 1 | DATE | 40-D-XXXX

TITLE BLOCK TYPE B

USE WHEN DRAWING APPLIES TO ANY TYPE OF ELECTRICAL FACILITY/INSTALLATION

NOT TO SCALE

REVISION PROCESS

When revising a standard drawing:

1. Get a copy of original drawing from Records.
2. Make sure autocad drawing version is same as drawing on file in Records.
3. Revise title block to match this drawing, as needed.
4. Have drawing approval signed by:
   a. D-8430 for Plants, structures and lighting systems.
   b. D-8440 for Switchyards, substations, SCADA & communications systems, and transmission lines.

NOTES

1. Use the following format for facility/feature:
   a. POWER AND PUMPING PLANTS
   b. POWER PLANTS
   c. PUMPING PLANTS
   d. SWITCHYARDS AND SUBSTATIONS
2. Alternative titles:
   a. LIGHTING INSTALLATION
   b. FIRE DETECTION AND ALARM SYSTEM
   c. TRANSMISSION LINES (for title block B only)
3. At time of this drawing, orgainzational codes were as follows:

   D-8430: Electrical Plants Group.
   D-8440: Electrical Systems Group.

ALWAYS THINK SAFETY

UNITED STATES
DEPARTMENT OF THE INTERIOR
BUREAU OF RECLAMATION
DRAFTING STANDARDS

ELECTRICAL STANDARDS

TITLE BLOCK FORMAT FOR STANDARD DRAWINGS
TYPICAL ARRANGEMENTS

DESIGNED Douglas Crockett CHECKED
DRAWN Douglas Crockett TECH. APPR. Dennis Miller P.E.
APPROVED P.E. MANAGER, ELECTRICAL SYSTEMS GROUP
DENVER, COLORADO 2004-06-30 SHEET 1 OF 1 | 40-D-7096

CAD SYSTEM AutoCAD Rel. 16.0a
CAD FILENAME 40-D-7096.DWG
DATE AND TIME PLOTTED 06/30/2004 10:24
PLOTTED BY DCROCKETT

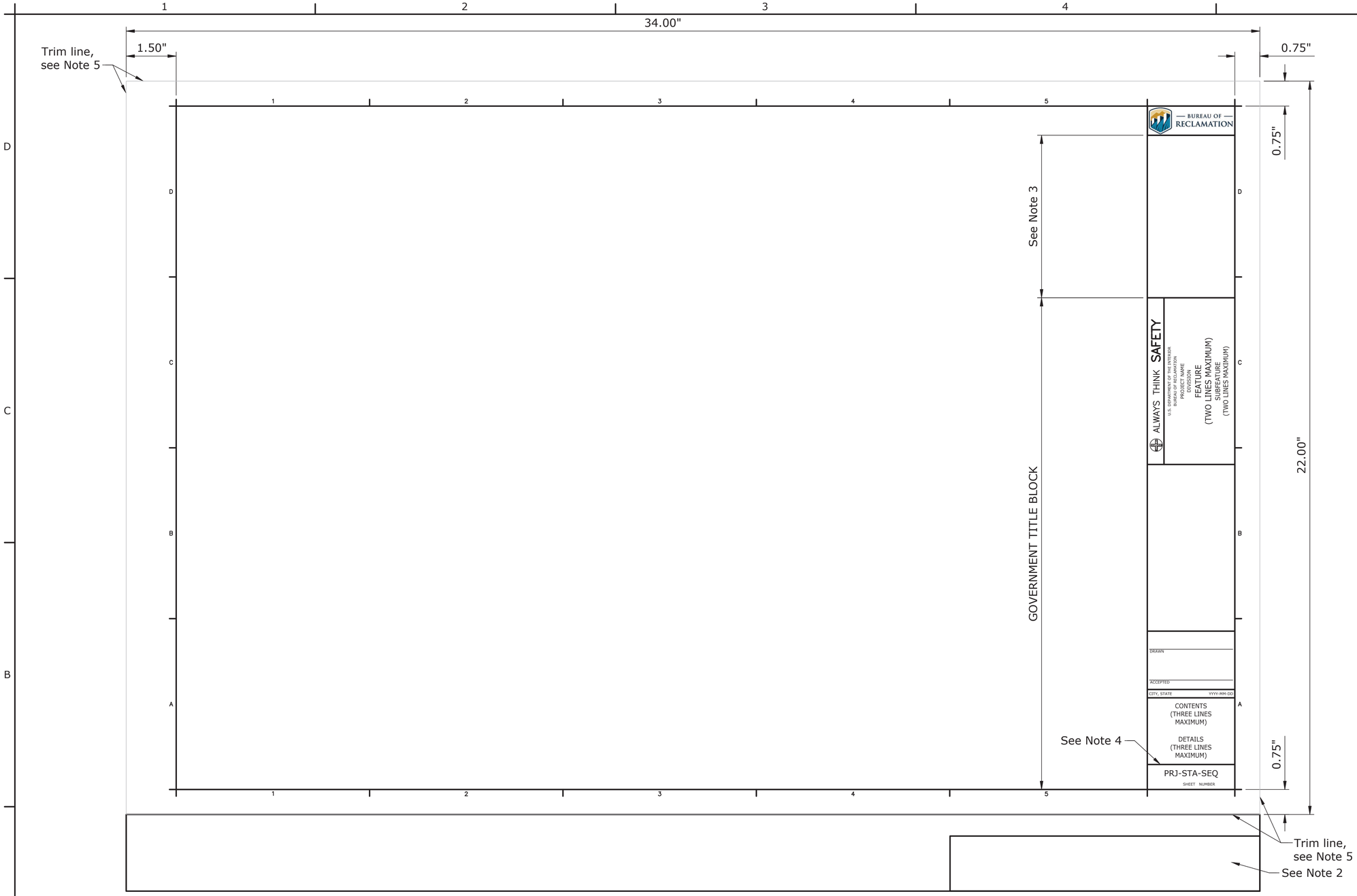

ALWAYS THINK SAFETY

U.S. DEPARTMENT OF THE INTERIOR
BUREAU OF RECLAMATION
YAKIMA PROJECT
KENNEWICK DIVISION

CHANDLER PUMPING PLANT

SWITCHYARD - STEEL STRUCTURES

SAMPLE TITLE

DRAWING BORDER

MANUFACTURER OR CONTRACTOR
DRAWN
ACCEPTED
TITLE

SAMPLE SIGNATURE LINES

REFERENCE

1. Information Management Handbook (IMH - 2020), Chapter 2, Section 9.A.4 - "Sheet Border" and Figures G2, G3, and G4.

NOTES

1. Government will provide contractor with an electronic AutoCAD template to be used by manufacturer for submittal of manufacturer's/contractors drawing in Government format.
2. The manufacturer's title block and drawing revisions as a result of the submittal process, may be located anywhere outside of the trim lines. The location shown on this drawing is the Government's preferred area.
3. The manufacturer shall show the Government solicitation/specification number, the manufacturer's name, drawing and sheet number in this area.
4. Government drawing number(s) will be issued at the end of the submittal process and drawing will be entered into the Government's electronic drawing system by the Government.
5. Trim lines shall be shown on all submitted drawings.

BUREAU OF RECLAMATION

ALWAYS THINK SAFETY

U.S. DEPARTMENT OF THE INTERIOR
BUREAU OF RECLAMATION
STANDARD DRAWINGS

STANDARD AND TYPICAL DESIGNS

GOVERNMENT DRAWING FORMAT

REV NO			
3	2023-04-20 Barthel, Rodney J P.E.	D	UPDATED DRAWING TO CURRENT DRAWING RECORDS SYSTEM. MINOR REVISIONS.
2	2015-03-25 Barthel, Rodney J P.E.	D	UPDATED TITLE BLOCK AND SIGNATURE LINES.
1	2014-12-17 E. Mendlin	D	UPDATED TITLE BLOCK AND SIGNATURE LINES.

S. NITTA
DESIGNED
S. NITTA
DRAWN
D. CRAWFORD
CHECKED
R. BARTHEL, P.E.
TECH. APPR.
R.W. LAFOND, P.E.
APPROVED
ADMIN APPROVAL -

DENVER, CO

DRAWING BORDER, SAMPLE TITLE BLOCK, AND SIGNATURE LINES

40-D-7102

SHEET 1

104-D-757

MISCELLANEOUS DESIGNATIONS

ALT _____ Alternator
A _____ Suffix designation for auxilliary control circuit
ASC _____ Adjustable speed controller
BFV _____ Butterfly valve
C or CAP _____ Capacitor
CB _____ Circuit breaker
CLF _____ Current limiting fuse
CNT _____ Counter
DV _____ Discharge valve
EXC _____ Exciter
FU _____ Fuse
GFCI _____ Ground fault circuit interrupter
GRD _____ Ground
GRS _____ Galvanized rigid steel conduit
GV _____ Gate or guard valve
HR _____ Hand reset (Use as suffix)
I _____ Input
IL _____ Indicating lamp, add prefix for color
IMC _____ Intermediate steel conduit
MCE _____ Motor control equipment (2500 – 5000 volts)
M _____ Motor
MCC _____ Motor control center (600 – volts and lower)
NP _____ Nameplate
NC _____ Normally closed
NO _____ Normally opened
NSPB _____ Nonsegregated phase bus
O _____ Output
PB _____ Pushbutton (Momentary contact type)
PBM _____ Pushbutton (Maintaining contact type)
PC _____ Programmable controller
PR _____ Probe operated relay (Refer to FS for suffix)
REC _____ Rectifier
R/I _____ Resistance to current transducer
SF _____ Service factor
SO _____ Solenoid oiler
SV _____ Solenoid operated valve
TE _____ Time delay on energization
TD _____ Time delay on deenergization
TT _____ Thermal switch
V/I _____ Voltage to current transducer
VLV _____ Valve
WL _____ Water level contact on telemeter receiver (Refer to FS for suffix)

WRM _____ Wound rotor motor
X,Y,X _____ Suffix for auxiliary relay, switch, or contactor (ALX,CSX,FLX, ect.)

–1,–2,–3, etc. _____ Suffix for unit number for pumping units, gates, valves, ect.

1,2,3, etc. _____ Suffix for electrical device numbering, such as TR1, TR2, ect.

* _____ Estimated rating

RELAY DESIGNATIONS

AL _____ Alarm relay
BG _____ Bearing temperature relay
CR _____ Control relay
FL _____ Field loss relay
FR _____ Field application relay
GP _____ Ground protective relay
IS _____ Incomplete sequence relay
LO _____ Lockout relay
OC _____ Overcurrent relay
OL _____ Overload relay
OV _____ Overvoltage relay
PO _____ Pullout (Loss of synchronism relay)
RC _____ Remote control relay
RSR _____ Remote sensing relay
SC _____ Squirrel cage (damper winding(relay
SR _____ Shift register
TR _____ Time delay relay
UF _____ Under frequency relay
UV–O/R _____ Undervoltage single and reverse phase relay
WT _____ Winding temperature relay

CONTACTOR DESIGNATIONS

FC _____ Field contactor
LC _____ Lighting contactor
M _____ Main contactor
MA _____ Air compressor motor contactor
MF _____ Vent fan motor contactor
MG* _____ Gate motor contactor
MO* _____ Oil pump motor contactor
MV* _____ Valve motor contactor
*Use suffix as application
–C Closing function
–L Lowering function
–O Opening function
–R Rasing function
S _____ Starting contractor
1S _____ Start contactor } Reduced voltage starting
2S _____ Start transition contactor } Reduced voltage starting
R _____ Run contactor } Reduced voltage starting

SWITCH DESIGNATIONS

CS _____ Control switch
FCD _____ Foreign circuit disconnect switch
FS _____ Float switch (Use suffix letter_ _ C–canal, P–pipe, R–reservoir, S–sump, T–tank)
LS _____ Limit switch
PS _____ Pressure switch
SS _____ Selector switch
TQ _____ Torque switch
TSW _____ Transfer switch

TRANSFORMER DESIGNATIONS

CCT _____ Control circuit transformer
CT _____ Current transformer
PT _____ Potential transformer
T _____ Transformer
TH _____ Transformer oil temperature
TL _____ Transformer oil level
TP _____ Transformer pressure relief
SST _____ Station service transformer

INSTRUMENT AND METER DESIGNATIONS

AM _____ Ammeter
AS _____ Ammeter transfer switch
CNT _____ Start counter
INT _____ Integrating instrument
PF _____ Power–factor meter
PST _____ Phase shifting transformer
RDM _____ Recording demand meter
TM _____ Time meter
V _____ Voltmeter
VAR _____ Varmeter
VARH _____ Varhour meter
VS _____ Voltmeter transfer switch
W _____ Wattmeter
WH _____ Watthour meter
WHD _____ Watthour demand meter
(*) _____ Indicates recording instruments
The asterisk is not part of the symbol.
Replace the asterisk with letter or letters depending on the function of the instrument.

DEVICE SYMBOLS

CS Control switch
AS Ammeter transfer switch
VS Voltmeter tansfer switch
Surge arrester
Capacitor
Reactor
Potential transformer
Current transformer
Power or distribution transformer
3ø, Wye grounded connection
3ø, Delta connection
3ø, Broken delta connection
3ø Open delta connection (corner grounded)

Disconnecting switch
Liquid level switch (Normally open)
Vacuum and pressure switch (Normally closed)
Temperature actuated switch (Normally open)
Flow actuated switch (Normally open)
Limit switch–direct actuated (Normally open)
Torque switch (Normally closed)
3–Position selector switch
Air circuit breaker thermomagetic trip 1 Frame size, 2 Inverse time trip, 3 Instantaneous trip
1 Rectifier, 2 Reactor, 3 Inverter
Silicon controlled rectifier (Solid state DC switch)
Air circuit breaker, electrically operated
Air circuit breaker, withdraw type
Contactor with thermal trip
Contactor with magnetic trip
Contactor with CT and magnetic trip relay
Contactor (Normally open)
Contactor (Normally closed)
Auxiliary contactor (Closes when main device is closed)
Auxiliary contactor (Open when main device is closed)
Relay contact number
Relay coil, contactor coil
Horn–gap disconnectiong switch
Fuse
Fuse, current limiting type
Instrument shunt
Resistor
Rheostat, or potentiometer
Separable connector
Indicating lamp W–white, R–red, G–green, Y–yellow, A–amber, B–blue
Battery
Bell
Horn
Pushbutton (Normally open, momentary contact)
Pushbutton (Normally closed, momentary contact)
Maintained contact pushbutton

Probe, water level detector
Load interrupter switch
Motor
Triac (Solid state AC switch)
Wound rotor motor

WIRING SYMBOLS

Ground connection
Interconnection between separately owned systems
Duplex single–gang plug receptacle
Single wectherproof plug receptacle
Watertight three–phase power receptacle
Single pole switch
Three way switch
Luminaire, letter indicates type, number indicates wattage
Represents connection from external equipment. Does not necessarily represent a terminal block.
High voltage cable termination
Represents connection from external equipment via–multi–pair control (signal) cable.

GROUND SYMBOLS

Cable exposed
Cable embedded in concrete
Cable concealed but not embedded
Cable buried directly in earth
Ground rod
Welded or bolted connection
Cable riser
Indicates ground when required for clarity
Ground connector per 40–D–4334, Fig. 4
Ground ring

CONDUIT SYMBOLS

Exposed
Embedded in concrete
Concealed but not embedded
Buried directly in earth
Bending toward observer
Bending away from observer
Capped
Pull box or junction box
Designation number
Liquid tight flexible metal conduit
Sealing bushing, conduit to cable

NOTES

1. If designations and symbols other than the ones shown on this drawing used, they shall be shown on the appropriate drawing.
2. For additional designations and symbols refer to NEMA Standards Pub. ICS–1970.
3. Contacts in control circuits are shown in the deenergized position. Liquid level switches are shown with liquid container empty. Vaccum and pressure switches are shown at ambient pressure. Temperature switches are shown at ambient temperature.

3 – 24 – 00 D – 2	REVISED TITLE BLOCK AND REDRAWN IN AUTOCAD 14.
3 – 11 – 81 D – D.G.	MINOR REVISIONS

ALWAYS THINK SAFETY

UNITED STATES
DEPARTMENT OF THE INTERIOR
BUREAU OF RECLAMATION
STANDARD DESIGNS

PUMPING PLANT
ELECTRICAL INSTALLATIONS
DESIGNATIONS AND SYMBOLS

DESIGNED N.L.B. TECH. APPR. P.L. AHNA
DRAWN D.D. GROULLARD SUBMITTED S.M. DENTON
CHECKED E.M.T. APPROVED M.H. KIGHT
CHIEF, ELECTRICAL BRANCH

CADD SYSTEM AutoCAD Rel. 14.01b | CADD FILENAME 104-757.DWG | DATE AND TIME PLOTTED Mar. 31 30, 20.00 14:46
DENVER, COLORADO FEBRUARY 13, 1982

104–D–757

IEEE STANDARD CONTROL & PROTECTION DEVICE FUNCTION NUMBERS

(SEE NOTES 1, 2, AND 3)

01___Master Element
02___Time-Delay Starting or Closing Relay (TDPU)
03___Checking or Interlocking Relay
04___Master Contactor
05___Stopping Device
06___Starting Circuit Breaker
07___Rate-of-Change Relay
08___Control Power Disconnecting Device
09___Reversing Device
10___Unit Sequence Switch
11___ Multifunction Device
12___Overspeed Device
13___Synchronous-speed Device
14___Underspeed Device
15___Speed or Frequency Matching Device
16___Reserved for future application
17___Shunting or Discharge Switch
18___Accelerating or Decelerating Device
19___Starting-to-Running Transition Contactor
20___Electrically Operated Valve
21___Distance Relay
22___Equalizer Circuit Breaker
23___Temperature Control Device
24___Volts Per Hertz Relay
25___Synchronizing or Synchronism-Check Device
26___Apparatus Thermal Device
27___Undervoltage Relay
28___Flame Detector
29___Isolating Contactor
30___Annunciator Relay
31___Separate Excitation Device
32___Directional Power Relay
33___Position Switch
34___Master Sequence Device
35___Brush-Operating or Slip-Ring Short-Circuiting Device
36___Polarity or Polarizing Voltage Device
37___Undercurrent or Underpower Relay
38___Bearing Protective Device
39___Mechanical Condition Monitor
40___Field Relay
41___Field Circuit Breaker
42___Running Circuit Breaker
43___Manual Transfer or Selector Device
44___Unit Sequence Starting Relay
45___Atmospheric Condition Monitor
46___Reverse-Phase or Phase-Balance Current Relay
47___Phase-Sequence Voltage Relay
48___Incomplete Sequence Relay
49___Machine or Transformer Thermal Relay
50___Instantaneous Overcurrent or Rate-of-Rise Relay
51___AC Time Overcurrent Relay
52___AC Circuit Breaker
53___Exciter or DC Generator Relay
54___Turning Gear Engaging Device
55___Power Factor Relay
56___Field Application Relay
57___Short-Circuiting or Grounding Device
58___Rectification Failure Relay
59___Overvoltage Relay
60___Voltage or Current Balance Relay
61___Density Switch or Sensor
62___Time-Delay Stopping or Opening Relay (TDDO)
63___Pressure Switch
64___Ground Detector Relay
65___Governor
66___Notching or Jogging Device
67___AC Directional Overcurrent Relay
68___Blocking Relay
69___Permissive Control Device
70___Rheostat
71___Level Switch
72___DC Circuit Breaker
73___Load-Resistor Contactor
74___Alarm Relay
75___Position Changing Mechanism
76___DC Overcurrent Relay
77___Pulse Transmitter
78___Phase-Angle Measuring or Out-of-Step Protective Relay
79___AC Reclosing Relay
80___Flow Switch
81___Frequency Relay
82___DC Reclosing Relay
83___Automatic Selective Control or Transfer Relay
84___Operating Mechanism
85___Carrier or Pilot-Wire Receiver Relay
86___Lockout Relay
87___Differential Protective Relay
88___Auxiliary Motor or Motor Generator
89___Line Switch
90___Regulating Device
91___Voltage Directional Relay
92___Voltage and Power Directional Relay
93___Field-Changing Contactor
94___Tripping or Trip-Free Relay
95___Reserved for future application
96___Reserved for future application
97___Reserved for future application
98___Creep Detector Device
99___Reserved for future application

FIRST LETTER SUFFIX OF THE DEVICE DESIGNATION

(SEE NOTES 1, 2, AND 3)

A____Governor System (or Actuator Systems--gates)
B____Battery Charging & Monitoring System
C____High-Voltage Cable System
D____Data Acquisition System
E____Excitation System including Transformer and Regulator but not Main Field
F____Fire and CO2 System
G____Main Generator including Auxiliary Systems
G/M___Generator Motor including Auxiliary Systems in Pumped Storage Applications
H____Turbine or Main Pump Including Auxiliary Systems
I____Isolated and Other Power Bus Systems (not High Voltage Cable)
J____Power Circuit Breaker including Auxiliary Systems
K____Power Transformer including Auxiliary Systems
L____Annunciator System, Security System
M____Main Pump Motor including Auxiliary Systems and Variable Speed Drive
N____Air (Pneumatic) System
O____Not used
P____Penstock or Discharge Line System
Q____Oil Storage, Handling, Purification System
R____Field Flashing System or Phase Reversal Switch including Auxiliary Systems
S____Station Service Substation System including Engine/Generator System
T____Tone and Transfer Trip System
U____Unit Control Circuit System or Uninterruptible Power Supply System
V____Intake and/or Discharge Valve System
W____Water Systems including Intake/Outlet Works and Plant Water and Sump Systems
X____Defined for systems unique to a facility
Y____Defined for systems unique to a facility
Z____Defined for systems unique to a facility

SECOND AND SUBSEQUENT LETTER SUFFIXES OF THE DEVICE DESIGNATION

(SEE NOTES 1, 2, AND 3)

A___Abnormal, A.C., Acceleration, Admission, Alarm, Amperes, Automatic, Auxiliaries, Phase A, etc.
B___Backup, Bearing, Block, Blower, Booster, Brakes, Bus, Button, Bypass, Phase B, etc.
C___Cable, Carrier, Charger, Check, Chlorination, Close, Collector, Common, Compensator, Compressor, Control, Cooling, Current, Cycle, Cylinder, Phase C, Conveyor, etc.
D___D.C., Deceleration, Delay, Depress, Detector, Dielectric, Differential, Discharge, Disconnect, Discordance, Domestic, Down, Downstream, Draft Tube, Drain, etc.
E___Ejector, Elevator, Emergency, Explosive, etc.
F___Failure, Fan, Fault, Feeder, Field, Filter, Fire, Flame, Flow, Follower, Forward, Frequency, Full, Fumes, Fuse, etc.
G___Gas, Gate, Gating (SCR), Generate, Ground, Guide Bearing, etc.
H___Halon, Hand, Heat, Heaters, High, Hoist, Horn, Hot, Housing, Hydropneumatic Tank, etc.
I___Indication, Initial, Inlet, Input, Instantaneous, Intake, Interface, Interlock, Interrupt, Inverter, Ionization, etc.
J___Jacking, Jet, etc.
K___Key, Transformer
L___Lamps, Left, Level, Lights, Limit, Line, Liquid, Local, Logic, Loss, Louvers, Low, Lower, Lubrication, etc.
M___Main, Malfunction, Manual, Meter, Metering, Motor, etc.
N___Negative, Network, Neutral, Normal, etc.
O___Open, Outlet, Output, etc.
P___Packing Box, Parallel, Parameter, Penstock, Phase, Phaseback, Pilot, Pit, Position, Positive, Potential, Pothead, Power, Pressure, Primary, Protection, Pulse, Pump, Purification, Push, etc.
Q___Oil, etc.
R___Raise, Reactor, Reclose, Record, Rectifier, Reed, Refrigeration, Regulate, Relay, Release, Relief, Remote, Reservoir, Reset, Resistor, Right, Rotation, Rotor, Runner, etc.
S___Seals, Secondary, Selector, Sewage, Shorting, Shutdown, Signal, Skimmer, Sludge, Smoke, Solenoid, Speed, Spiral or Scroll Case, Splice, Stabilizer, Standby, Starting, Stator, Stepping, Storage, Strainer, Suction, Sump, Supply, Switch, Synchronizing, etc.
T___Tank, Temperature, Test, Thermal, Thrust Bearing, Thyratron, Tie, Time, Transducer, Transfer, Transmitter, Trip, Trouble, Trashrake, etc.
U___Unit, Unloader, Unwatering, Up, Upper, Upstream, etc.
V___Valve, Vars, Vibration, Voltage, etc.
W___Water, Watts, Winding, etc.
X___Auxiliary Device, etc.
Y___Auxiliary to Device X, Antipump Relay. etc.
Z___Auxiliary to Device Y

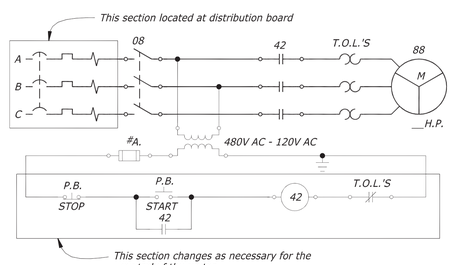

BASIC MOTOR CONTACTOR SCHEMATIC

DEVICE SYMBOLS

(SEE NOTES 5 AND 6)

RELAY COIL, SOLENOID COIL OR CONTACTOR COIL
INDICATING LAMP
INDICATING METER
RECORDING METER
INTEGRATING METER
TRANSFER SWITCH
TRANSDUCER
TELEMETRY
TELEMETRY FOR REMOTE INDICATION
TELEMETRY FOR REMOTE LOGGING AND/OR RECORDING
TELEMETRY FOR REMOTE RECORDING AND/OR LOGGING ASSOCIATED WITH AUTOMATIC GENERATION CONTROL
MICROWAVE, TRANSMITTER-RECEIVER, FOR RELAYING (SEE NOTE 7)
MICROWAVE, TRANSMITTER-RECEIVER, FOR SUPERVISORY CONTROL (SEE NOTE 7)
MICROWAVE, TRANSMITTER-RECEIVER FOR TELEMETERING (SEE NOTE 7)
REMOVABLE LINK
DEVICE TERMINAL POINT (SEE NOTE 11)
CONTACT, NORMALLY OPEN (SEE NOTE 8)
CONTACT, NORMALLY CLOSED (SEE NOTE 8)
PUSHBUTTON, NORMALLY CLOSED
PUSHBUTTON, NORMALLY OPEN
PUSHBUTTON, MAINTAINED
CONTACTOR WITH THERMAL OVERLOAD TRIP ELEMENT
CONTACTOR WITH MAGNETIC TRIP ELEMENT
THERMAL OVERLOAD DEVICE
MAGNETIC OVERLOAD DEVICE
THERMOMAGNETIC OVERLOAD DEVICE
TIME DELAY MAGNETIC OVERLOAD DEVICE
FUSE
FUSE, CURRENT LIMITING TYPE
RESISTOR
RESISTOR, VARIABLE
RESISTOR, TAPPED
VARISTOR
THYRISTOR OR TRIAC
DIODE
ZENER DIODE
SEMI-CONDUCTOR CONTROLLED RECTIFIER (SCR)
RESISTANCE TEMPERATURE DETECTOR (RTD)
INSTRUMENT SHUNT
CAPACITOR

REACTOR
THERMOCOUPLE
LIGHTNING OR SURGE ARRESTER
PROTECTIVE GAP
HORN GAP
CABLE TERMINATION
BELL
HORN
BUZZER
CARRIER FREQUENCY WAVE TRAP
MECHANICAL INTERLOCK
KEY INTERLOCK
ELECTRICAL INTERLOCK
REPRESENTS CONNECTION FROM EXTERNAL EQUIPMENT, DOES NOT NECESSARILY REPRESENT A TERMINAL POINT
SYNCHRO (SELF-SYNCHRONOUS) DEVICE FOR POSITION INDICATION OR CONTROL
THREE-PHASE, 3-WIRE, DELTA
THREE-PHASE, BROKEN DELTA
THREE-PHASE, OPEN DELTA
THREE-PHASE, Y (OR STAR), UNGROUNDED
THREE-PHASE, Y (OR STAR), WITH NEUTRAL BROUGHT OUT AND GROUNDED
THREE-PHASE, ZIG-ZAG, UNGROUNDED
--- SEE NOTE 9 ---
A.C. GENERATOR, MOTOR OR CONDENSER, BASIC SYMBOL
SQUIRREL CAGE INDUCTION MOTOR
SLIP-RING OR WOUND ROTOR INDUCTION MOTOR
SYNCHRONOUS GENERATOR MOTOR OR CONDENSER WITH DIRECT CURRENT FIELD EXCITATION
SYNCHRONOUS CONVERTER
D.C. GENERATOR, MOTOR OR CONDENSER, BASIC SYMBOL
D.C. GENERATOR, MOTOR OR CONDENSER WITH SHUNT AND SERIES FIELD
SPLIT FIELD MOTOR
DIRECT CONNECTED UNITS. USE BASIC AC OR DC GENERATOR OR MOTOR SYMBOLS
USE MANUFACTURERS DIAGRAM ROTATING AMPLIFIER
PERMANENT MAGNET GENERATOR
SINGLE-PHASE TWO-WINDING TRANSFORMER
POLYPHASE TRANSFORMER
THREE-WINDING TRANSFORMER
AUTOTRANSFORMER OR COMPENSATOR
CONSTANT-CURRENT TRANSFORMER

LOAD-RATIO CONTROL TRANSFORMER WITH TAPS
STEP-VOLTAGE REGULATOR OR LOAD-RATIO CONTROL AUTOTRANSFORMER
CURRENT TRANSFORMER (C.T.), WOUND TYPE
CURRENT TRANSFORMER (C.T.), BUSHING TYPE
POTENTIAL TRANSFORMER (P.T.)
CAPACITOR-BUSHING POTENTIAL DEVICE
CARRIER-COUPLING CAPACITOR POTENTIAL DEVICE
TO CARRIER EQUIPMENT
DISCONNECTING SWITCH, HOOK-STICK-OPERATED
DISCONNECTING SWITCH, MANUALLY-GANG-OPERATED
AIR-BREAK SWITCH, HORN GAP, MANUALLY-GANG-OPERATED
DISCONNECTING SWITCH, MOTOR-OPERATED
INTERRUPTER SWITCH
MANUALLY OPENED, ELECTRICALLY TRIPPED GROUNDING SWITCH
FUSED DISCONNECT SWITCH
POWER CIRCUIT BREAKER
POWER CIRCUIT BREAKER, DRAWOUT TYPE
AIR CIRCUIT BREAKER
AIR CIRCUIT BREAKER, DRAWOUT TYPE
AIR CIRCUIT BREAKER WITH ELECTRICAL TRIP
3-POLE CIRCUIT BREAKER WITH THERMAL-OVERLOAD DEVICE OR INVERSE-TIME-TRIP ELEMENT IN ALL 3 POLES
3-POLE CIRCUIT BREAKER WITH MAGNETIC-OVERLOAD DEVICE OR INSTANTANEOUS-TRIP ELEMENT IN ALL 3 POLES

NOTES

1. Select the most appropriate ANSI device function number which identifies the device used by function and the most appropriate suffix letters which further identify the device by system, subsystem, quantity or condition monitored or controlled.

Examples: 127UC....Unit 1 Unit Control Bus Undervoltage Relay
251EF....Unit 2 Exciter Field Time Delay Overcurrent Relay
71WSH....Plant Sump High Water Level Switch

2. Device numbers 1 through 99 are used for the overall plant and switchyard operation. Device numbers 101 through 199, 201 through 299, 301 through 399, etc. are used for Units 1, 2, 3, etc. Device numbers prefixed by letters RE indicates devices controlled by a supervisory system.

3. No device designation shall be duplicated in the plant or switchyard. When two or more devices perform exactly the same function, the designations will be followed by a number, starting at number 1, to differentiate between the devices.

Examples: 127UCX1, 2.....Auxiliary Relays to Device 127UC
71WSHX1, 2, 3...Auxiliary Relays to Device 71WSH
104UC1, 2.....Unit 1 Master Control Starting Relays

4. All schematic diagrams shall have an explanation list for devices shown on that diagram. This explanation list shall consist of a device designation with a concise description for each device and be located above the title block (e.g. See the examples in Notes 1 and 3 above).

5. This list of device symbols shows the preferred symbol to be used on Bureau of Reclamation single-line and schematic diagrams.

6. The following symbols are not part of the device symbols they are shown with, always replace these symbols by the following:

*...Show device function numbers and letter suffixes within circle.

▽...Show color of lamp by the following: A-Amber, B-Blue, C-Clear, G-Green, O-Orange, R-Red, W-White.

■...Substitute symbol from the following list:

A - Ammeter	PH - Phase Meter
AH - Ampere-hour Meter	PI - Position Indication
CMA - Contact-making Ammeter	RF - Reactive Factor Meter
CMC - Contact-making Clock	RPM - Speed Indicator
CMV - Contact-making Voltmeter	SY - Synchroscope
DM - Demand Meter	T - Temperature Meter
ETM - Elapsed Time Meter	TS - Time Switch
F - Frequency Meter	V - Voltmeter
G - Galvanometer	VAR - Varmeter
GD - Ground Detector	VH - Varhour Meter
OHM - Ohmmeter	W - Watt Meter
OSC - Oscillograph	WH - Watthour Meter
PF - Power Factor Meter	WHDM - Watthour-demand Meter

Use "R" in front of letters for a recording type meter.

□....Show location to which data or information is being telemetered.

▬...Show device function numbers and letter suffixes.

⬭...Show a descriptive note, letter, abbreviation or word to indicate when the contact opens or closes. For latching relays, selector or control switches, use the normally open contact with a letter or word indicating when the contact closes. For time delay relays use TDC or TDO for contacts. All other relay contacts do not require any descriptive note.

△ ....Show TR for torque-synchro receiver or TX for torque-synchro transmitter.

┼ ....Show C, M, or G within symbol. Internal connections for A.C. machines should be shown, e.g. three phase, single phase, etc.

⬡....Show S.T. for shunt trip, R.C.T. for reverse current trip, U.V. for undervoltage trip, etc.

7. Channels are via microwave or leased facilities, not via powerline carriers.

8. These contact symbols apply to the following devices: control, flow, level, limit, position, pressure, speed, and temperature switches; relays; contactors; auxiliary contacts; etc. For selector switches, always use a normally-open contact with the position(s) the contact is closed listed below contact.

9. The symbols shown before this point are used on single-line and schematic diagrams. The symbols shown after this point are used as follows: the left-hand symbols are used on single-line diagrams; the right-hand symbols are used on schematic diagrams.

10. All devices shall be shown in the nonoperated and deenergized positions, e.g. breakers shall be open; latching relays shall be in the reset position; selector switches shall be in the off position; level switches shall be in the empty container state, pressure switches shall be in the ambient pressure state; temperature switches shall be in the ambient temperature state; valves, gates, and doors shall be shown in the closed position; etc.

11. All devices, shown on schematic diagrams, shall be shown with their device terminal points numbered and/or lettered for identification of internals for wiring purposes.

12. Whenever this drawing and drawing number 104-D-757 are both referenced, the designations and symbols shown on this drawing shall take precedence over those shown on 104-D-757.

This drawing supersedes drawings 104-D-200 through 104-D-214.

ALWAYS THINK SAFETY

UNITED STATES
DEPARTMENT OF THE INTERIOR
BUREAU OF RECLAMATION
STANDARD DESIGNS

MAJOR POWER/PUMPING PLANTS
ELECTRICAL INSTALLATION
DEVICE DESIGNATIONS AND SYMBOLS TO BE USED ON SINGLE-LINE AND SCHEMATIC DIAGRAMS

REV NO		
4	2017-10-24	SHADED IN TOP OVAL FOR NOTE 6. ("SHOW DEVICE FUNCTION NUMBERS...") CLARIFIED NOTE 8 FOR SELECTOR SWITCHES
6-24-2003 D- L.G.	REVISED STANDARDS REFERENCES.	
4-4-00 D- L.G.	REDRAWN IN AUTOCAD.	
6 - 1 - 90 D- J.W.R.	ADDED LIST OF SPERCEDED DRAWINGS, NEW TITLE BLOCK, AND DRAWING NUMBER IN UPPER LEFT CORNER.	

DESIGNED R.W.M.
DRAWN D.D. DROUILARD
CHECKED P.W.
TECHNICAL APPROVAL J. REIF
SUBMITTED H.H. VANDERPLAATS
APPROVED R.H. AUERBACH
CHIEF, ELECTRICAL BRANCH

CADD SYSTEM	CADD FILENAME	DATE AND TIME PLOTTED
AutoCAD Rel. 21.0s	104-D-1150-RD-1.DWG	OCTOBER 24, 2017 09:33
DENVER, COLORADO	OCTOBER 21,1983	104-D-1150

Ready for Release

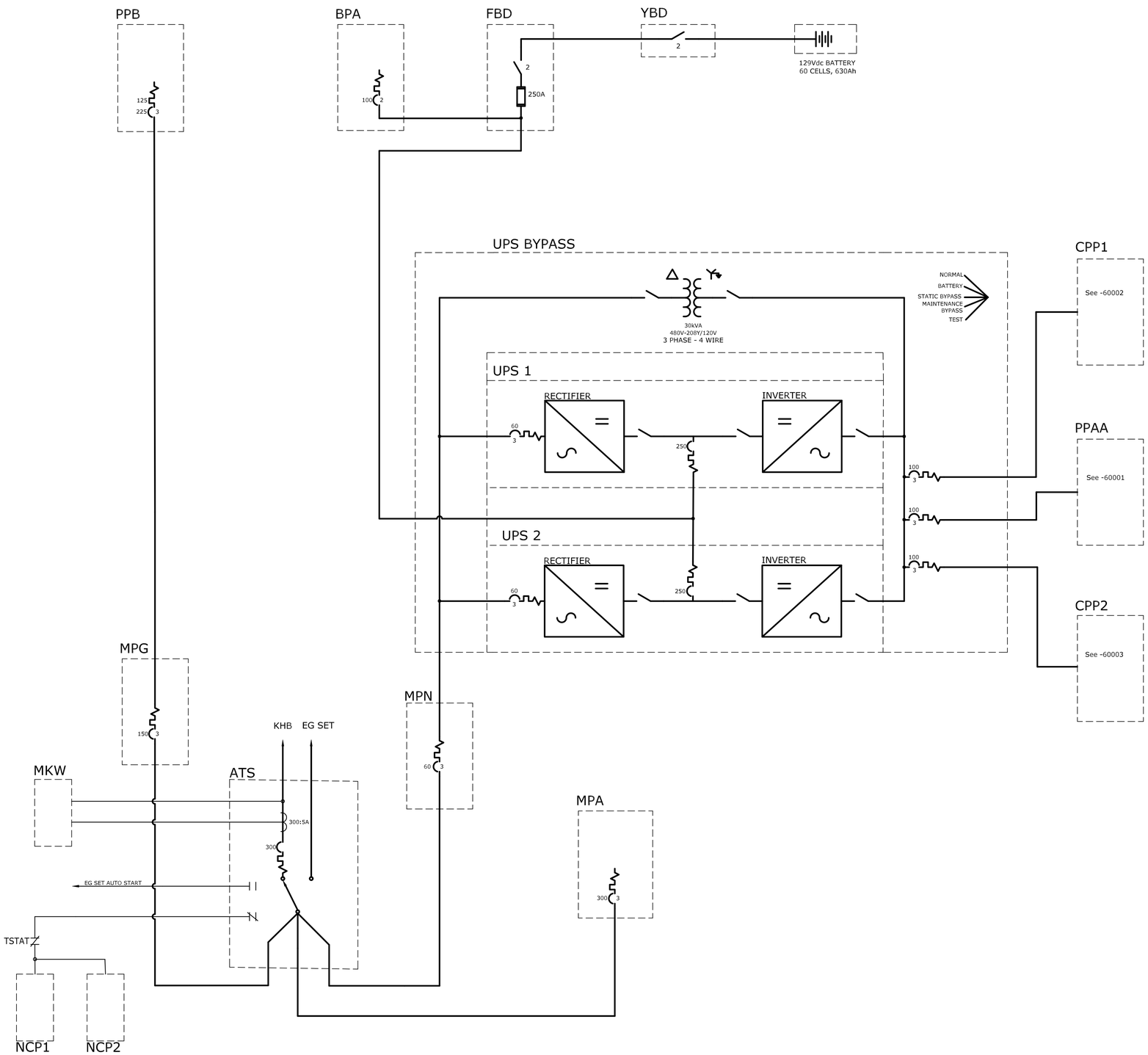

NOTES

1. Drawing for construction purposes only. Drawing 467-703-2612 will require update upon installation.
2. Ground-Neutral bond will be at ATS.

EXPLANATION

DEVICE	LOCATION	DESCRIPTION
ATS (NEW)	Distribution Panel Room (23)	480Y/277V, 300A, 3-phase automatic transfer switch.
BPA	UPS/Battery Room (20)	100A, 250V, DC panelboard.
CPP1 (NEW)	Computer/ Comm. Room (15)	208/120V, 100A, 3-phase, 4 wire panelboard.
CPP2 (NEW)	Computer/ Comm. Room (15)	208/120V, 100A, 3-phase, 4 wire panelboard.
FBD	UPS/Battery Room (20)	600V Fused Disconnect Switch.
KHB	Near Switchyard	225 kVA, 2.4kV - 480Y Pad Mount Transformer
MPA	Distribution Panel Room (23)	480/277V, 300A, 3-phase, 4 wire panelboard.
MPG (NEW)	UPS/Battery Room (20)	150A, 480/277V, 3-phase, 4 wire enclosed circuit breaker.
MPN (NEW)	UPS/Battery Room (20)	60A, 480/277V, 3-phase, 4 wire enclosed circuit breaker.
MKW	Distribution Panel Room (23)	Utility Meter Enclosure.
NCP1	Heating/ Ventilating Room (25)	HVAC unit.
NCP2	Heating/ Ventilating Room (25)	HVAC unit.
PPAA (NEW)	Computer/ Comm. Room (15)	208/120V, 100A, 3-phase, 4 wire panelboard.
PPB	Air Conditioning Room (21)	480/277V, 200A, 3-phase, 4 wire panelboard.
UPS (NEW)	UPS/Battery Room (20)	30kVA, 480V, 3-phase, uninterruptible power supply.
YBD (NEW)	Mobile Comm. Service Area (22)	600V, 300A, non-fused, 2 pole, heavy duty, safety disconnect switch.

REFERENCE DRAWINGS

SECURITY UPGRADE	20-600-3812
ELECTRICAL PANEL MAIN SINGLE LINE SCHEMATIC DIAGRAM	467-703-2612
MAIN DISTRIBUTION PANELS MPA, LPA, LPAA, LCPA, TRANSFER SW. MTS AND KLA D.W.D.	467-703-2628
SUPERVISORY CONTROL BLDG.-HVAC WIRING	467-D-1931
SUPERVISORY CONTROL BLDG.- PLOT PLAN	467-D-1932
PANELBOARD PPAA PANEL SCHEDULE	467-D-60001
PANELBOARD CPP1 PANEL SCHEDULE	467-D-60002
PANELBOARD CPP2 PANEL SCHEDULE	467-D-60003

BUREAU OF RECLAMATION

ALWAYS THINK SAFETY

U.S. DEPARTMENT OF THE INTERIOR
BUREAU OF RECLAMATION
PICK-SLOAN MISSOURI BASIN PROGRAM
TRANSMISSION DIVISION (WEST)

MAINTENANCE AND SERVICE AREA FACILITIES

SUPERVISORY CONTROL BUILDING

R. Shea
DESIGNED
R. Shea
DRAWN
A. BUITRAGO
CHECKED
Kelly, John T P.E.
TECH. APPR.
Mendlin, Eric T P.E.
APPROVED
ADMIN APPROVAL

DENVER, CO 2026-01-23

ELECTRICAL POWER SINGLE-LINE

BACKUP POWER DETAILS

467-D-60006
SHEET

LAST SAVED DATE
2026-01-22
LAST SAVED BY
RSHEA

CAD SYSTEM
AutoCAD 25.0S (LMS TECH)
CAD FILENAME
467-D-60006.DWG

Attachment # 3
Standard Form 24
Bid Bond

Bid Bond (See Instructions on Page 3)	Date Bond Executed (Must Not Be Later Than Bid Opening Date)	**OMB Control Number: 9000-0001** **Expiration Date: 1/31/2027**

Principal (Legal Name And Business Address)	Type Of Organization ("X" One) ☐ Individual ☐ Partnership ☐ Joint Venture ☐ Corporation ☐ Other (Specify)
	State Of Incorporation

Surety(ies) (Name And Business Address)

Penal Sum Of Bond					Bid Identification	
Percent Of Bid Price	Amount Not To Exceed				Bid Date	Invitation Number
	Million(s)	Thousand(s)	Hundred(s)	Cents	For (Construction, Supplies Or Services)	

Obligation:

We, the Principal and Surety(ies) are firmly bound to the United States of America (hereinafter called the Government) in the above penal sum. For payment of the penal sum, we bind ourselves, our heirs, executors, administrators, and successors, jointly and severally. However, where the Sureties are corporations acting as co-sureties, we, the Sureties, bind ourselves in such sum "jointly and severally" as well as "severally" only for the purpose of allowing a joint action or actions against any or all of us. For all other purposes, each Surety binds itself, jointly and severally with the Principal, for the payment of the sum shown opposite the name of the Surety. If no limit of liability is indicated, the limit of liability is the full amount of the penal sum.

Conditions:

The Principal has submitted the bid identified above.

Therefore:

The above obligation is void if the Principal - (a) upon acceptance by the Government of the bid identified above, within the period specified therein for acceptance (sixty (60) days if no period is specified), executes the further contractual documents and gives the bond(s) required by the terms of the bid as accepted within the time specified (ten (10) days if no period is specified) after receipt of the forms by the Principal; or (b) in the event of failure to execute such further contractual documents and give such bonds, pays the Government for any cost of procuring the work which exceeds the amount of the bid.

Each Surety executing this instrument agrees that its obligation is not impaired by any extension(s) of the time for acceptance of the bid that the Principal may grant to the Government. Notice to the Surety(ies) of extension(s) is waived. However, waiver of the notice applies only to extensions aggregating not more than sixty (60) calendar days in addition to the period originally allowed for acceptance of the bid.

Witness:

The Principal and Surety(ies) executed this bid bond and affixed their seals on the above date.

Principal

Signature(s)	1. (Seal)	2. (Seal)	3. (Seal)	Corporate Seal
Name(s) And Title(s) (Typed)	1.	2.	3.	

Individual Surety(ies)

Signature(s)	1. (Seal)	2. (Seal)
Name(s) (Typed)	1.	2.

Corporate Surety(ies)

Surety A	Name And Address		State Of Incorporation	Liability Limit ($)	Corporate Seal
	Signature(s)	1.	2.		
	Name(s) And Title(s) (Typed)	1.	2.		
Surety B	Name And Address		State Of Incorporation	Liability Limit ($)	Corporate Seal
	Signature(s)	1.	2.		
	Name(s) And Title(s) (Typed)	1.	2.		
Surety C	Name And Address		State Of Incorporation	Liability Limit ($)	Corporate Seal
	Signature(s)	1.	2.		
	Name(s) And Title(s) (Typed)	1.	2.		
Surety D	Name And Address		State Of Incorporation	Liability Limit ($)	Corporate Seal
	Signature(s)	1.	2.		
	Name(s) And Title(s) (Typed)	1.	2.		

Surety E	Name And Address		State Of Incorporation	Liability Limit ($)	Corporate Seal
	Signature(s)	1.	2.		
	Name(s) And Title(s) (Typed)	1.	2.		
Surety F	Name And Address		State Of Incorporation	Liability Limit ($)	Corporate Seal
	Signature(s)	1.	2.		
	Name(s) And Title(s) (Typed)	1.	2.		
Surety G	Name And Address		State Of Incorporation	Liability Limit ($)	Corporate Seal
	Signature(s)	1.	2.		
	Name(s) And Title(s) (Typed)	1.	2.		

Instructions

1. This form is authorized for use when a bid guaranty is required. Any deviation from this form will require the written approval of the Administrator of General Services.
2. Insert the full legal name and business address of the Principal in the space designated "Principal" on the face of the form. An authorized person shall sign the bond. Any person signing in a representative capacity (e.g., an attorney-in-fact) must furnish evidence of authority if that representative is not a member of the firm, partnership, or joint venture, or an officer of the corporation involved.
3. The bond may express penal sum as a percentage of the bid price. In these cases, the bond may state a maximum dollar limitation (e.g., 20% of the bid price but the amount not to exceed _____ dollars).
4. (a) Corporations executing the bond as sureties must appear on the Department of the Treasury's list of approved sureties and must act within the limitations listed therein. The value put into the Liability Limit block is the penal sum (i.e., the face value) of the bond, unless a co-surety arrangement is proposed.

(b) When multiple corporate sureties are involved, their names and addresses shall appear in the spaces (Surety A, Surety B, etc.) headed "Corporate Surety(ies)." In the space designated "Surety(ies)" on the face of the form, insert only the letter identifier corresponding to each of the sureties. Moreover, when co-surety arrangements exist, the parties may allocate their respective limitations of liability under the bond, provided that the sum total of their liability equals 100% of the bond penal sum.

(c) When individual sureties are involved, a completed Affidavit of Individual Surety (Standard Form 28) for each individual surety, shall accompany the bond. The Government may require the surety to furnish additional substantiating information concerning its financial capability.

5. Corporations executing the bond shall affix their corporate seals. Individuals shall execute the bond opposite the word "Corporate Seal"; and shall affix an adhesive seal if executed in Maine, New Hampshire, or any other jurisdiction requiring adhesive seals.
6. Type the name and title of each person signing this bond in the space provided.
7. In its application to negotiated contracts, the terms "bid" and "bidder" shall include "proposal" and "offeror."

Paperwork Reduction Act Statement - This information collection meets the requirements of 44 USC § 3507, as amended by section 2 of the Paperwork Reduction Act of 1995. You do not need to answer these questions unless we display a valid Office of Management and Budget (OMB) control number. The OMB control number for this collection is 9000-0001. We estimate that it will take 1 hour to read the instructions, gather the facts, and answer the questions. Send only comments relating to our time estimate, including suggestions for reducing this burden, or any other aspects of this collection of information to: General Services Administration, Regulatory Secretariat Division (MVCB), 1800 F Street, NW, Washington, DC 20405.

Attachment # 4
Standard Form 25
Performance Bond

Performance Bond	Date Bond Executed (Must be same or later than date of contract)	**OMB Control Number: 9000-0001** **Expiration Date: 1/31/2027**

See Instructions on page 3

Principal (Legal name and business address)	Type of Organization ("X" one) ☐ Individual ☐ Partnership ☐ Joint Venture ☐ Corporation ☐ Other (Specify)
	State of Incorporation
Surety(ies) (Name(s) and business address(es))	Penal Sum of Bond Million(s) / Thousand(s) / Hundred(s) / Cents
	Contract Date / Contract Number

Obligation:

We, the Principal and Surety(ies), are firmly bound to the United States of America (hereinafter called the Government) in the above penal sum. For payment of the penal sum, we bind ourselves, our heirs, executors, administrators, and successors, jointly and severally. However, where the Sureties are corporations acting as co-sureties, we, the Sureties, bind ourselves in such sum "jointly and severally" as well as "severally" only for the purpose of allowing a joint action or actions against any or all of us. For all other purposes, each Surety binds itself, jointly and severally with the Principal, for the payment of the sum shown opposite the name of the Surety. If no limit of liability is indicated, the limit of liability is the full amount of the penal sum.

Conditions:

The Principal has entered into the contract identified above.

Therefore:

The above obligation is void if the Principal-

(a) (1) Performs and fulfills all the understanding, covenants, terms, conditions, and agreements of the contract during the original term of the contract and any extensions thereof that are granted by the Government, with or without notice of the Surety(ies) and during the life of any guaranty required under the contract, and

(2) Performs and fulfills all the undertakings, covenants, terms, conditions, and agreements of any and all duly authorized modifications of the contract that hereafter are made. Notice of those modifications to the Surety(ies) are waived.

(b) Pays to the Government the full amount of the taxes imposed by the Government, if the said contract is subject to 41 USC Chapter 31, Subchapter III, Bonds, which are collected, deducted, or withheld from wages paid by the Principal in carrying out the construction contract with respect to which this bond is furnished.

Witness:

The Principal and Surety(ies) executed this performance bond and affixed their seals on the above date.

Principal

Signature(s)	1. (Seal)	2. (Seal)	3. (Seal)	Corporate Seal
Name(s) & Title(s) (Typed)	1.	2.	3.	

Individual Surety(ies)

Signature(s)	1. (Seal)	2. (Seal)
Name(s) (Typed)	1.	2.

Corporate Surety(ies)

Surety A	Name & Address		State of Incorporation	Liability Limit ($)	Corporate Seal
	Signature(s)	1.	2.		
	Name(s) & Title(s) (Typed)	1.	2.		
Surety B	Name & Address		State of Incorporation	Liability Limit ($)	Corporate Seal
	Signature(s)	1.	2.		
	Name(s) & Title(s) (Typed)	1.	2.		
Surety C	Name & Address		State of Incorporation	Liability Limit ($)	Corporate Seal
	Signature(s)	1.	2.		
	Name(s) & Title(s) (Typed)	1.	2.		
Surety D	Name & Address		State of Incorporation	Liability Limit ($)	Corporate Seal
	Signature(s)	1.	2.		
	Name(s) & Title(s) (Typed)	1.	2.		
Surety E	Name & Address		State of Incorporation	Liability Limit ($)	Corporate Seal
	Signature(s)	1.	2.		
	Name(s) & Title(s) (Typed)	1.	2.		

Corporate Surety(ies) (continued)

Surety F	Name & Address		State of Incorporation	Liability Limit ($)	Corporate Seal
	Signature(s)	1.	2.		
	Name(s) & Title(s) (Typed)	1.	2.		
Surety G	Name & Address		State of Incorporation	Liability Limit ($)	Corporate Seal
	Signature(s)	1.	2.		
	Name(s) & Title(s) (Typed)	1.	2.		

Bond Premium ▶	Rate Per Thousand ($)	Total ($)

Instructions

1. This form is authorized for use in connection with Government contracts. Any deviation from this form will require the written approval of the Administrator of General Services.

2. Insert the full legal name and business address of the Principal in the space designated "Principal" on the face of the form. An authorized person shall sign the bond. Any person signing in a representative capacity (e.g., an attorney-in-fact) must furnish evidence of authority if that representative is not a member of the firm, partnership, or joint venture, or an officer of the corporation involved.

3. (a) Corporations executing the bond as sureties must appear on the Department of the Treasury's list of approved sureties and must act within the limitations listed therein. The value put into the Liability Limit block is the penal sum (i.e., the face value) of bonds, unless a co-surety arrangement is proposed.

   (b) When multiple corporate sureties are involved, their names and addresses shall appear in the spaces (Surety A, Surety B, etc.) headed "Corporate Surety(ies)." In the space designated "Surety(ies)" on the face of the form, insert only the letter identifier corresponding to each of the sureties. Moreover, when co-surety arrangements exist, the parties may allocate their respective limitations of liability under the bonds, provided that the sum total of their liability equals 100% of the bond penal sum.

   (c) When individual sureties are involved, a completed Affidavit of Individual Surety (Standard Form 28) for each individual surety shall accompany the bond. The government may require the surety to furnish additional substantiating information concerning its financial capability.

4. Corporations executing the bond shall affix their corporate seals. Individuals shall execute the bond opposite the words "Corporate Seal", and shall affix an adhesive seal if executed in Maine, New Hampshire, or any other jurisdiction requiring adhesive seals.

5. Type the name and title of each person signing this bond in the space provided.

Paperwork Reduction Act Statement

This information collection meets the requirements of 44 USC § 3507, as amended by section 2 of the Paperwork Reduction Act of 1995. You do not need to answer these questions unless we display a valid Office of Management and Budget (OMB) control number. The OMB control number for this collection is 9000-0001. We estimate that it will take 1 hour to read the instructions, gather the facts, and answer the questions. Send only comments relating to our time estimate, including suggestions for reducing this burden, or any other aspects of this collection of information to: U.S. General Services Administration, Regulatory Secretariat Division (MVCB), 1800 F Street, NW, Washington, DC 20405.

Attachment #5
Standard Form 25A
Payment Bond

Payment Bond (See Instructions On Page 3)	Date Bond Executed (Must be same or later than date of contract)	**OMB Control Number: 9000-0001** **Expiration Date: 1/31/2027**

Principal (Legal name and business address)	Type Of Organization ("X" one) ☐Individual ☐Partnership ☐Joint Venture ☐Corporation ☐Other (Specify)
	State Of Incorporation
Surety(ies) (Name(s) and business address(es))	Penal Sum Of Bond

Million(s)	Thousand(s)	Hundred(s)	Cents

Contract Date	Contract Number

Obligation:

We, the Principal and Surety(ies), are firmly bound to the United States of America (hereinafter called the Government) in the above penal sum. For payment of the penal sum, we bind ourselves, our heirs, executors, administrators, and successors, jointly and severally. However, where the Sureties are corporations acting as co-sureties, we, the Sureties, bind ourselves in such sum "jointly and severally" as well as "severally" only for the purpose of allowing a joint action or actions against any or all of us. For all other purposes, each Surety binds itself, jointly and severally with the Principal, for the payment of the sum shown opposite the name of the Surety. If no limit is indicated, the limit of liability is the full amount of the penal sum.

Conditions:

The above obligation is void if the Principal promptly makes payment to all persons having a direct relationship with the Principal or a subcontractor of the Principal for furnishing labor, material or both in the prosecution of the work provided for in the contract identified above, and any authorized modifications of the contract that subsequently are made. Notice of those modifications to the Surety(ies) are waived.

Witness:

The Principal and Surety(ies) executed this payment bond and affixed their seals on the above date.

Principal

Signature(s)	1. (Seal)	2. (Seal)	3. (Seal)	Corporate Seal
Name(s) & Title(s) (Typed)	1.	2.	3.	

Individual Surety(ies)

Signature(s)	1. (Seal)	2. (Seal)
Name(s) (Typed)	1.	2.

Corporate Surety(ies)

Surety A	Name & Address		State Of Incorporation	Liability Limit $	Corporate Seal
	Signature(s)	1.	2.		
	Name(s) & Title(s) (Typed)	1.	2.		

Corporate Surety(ies) (Continued)

Surety B	Name & Address		State Of Incorporation	Liability Limit $	Corporate Seal
	Signature(s)	1.	2.		
	Name(s) & Title(s) (Typed)	1.	2.		
Surety C	Name & Address		State Of Incorporation	Liability Limit $	Corporate Seal
	Signature(s)	1.	2.		
	Name(s) & Title(s) (Typed)	1.	2.		
Surety D	Name & Address		State Of Incorporation	Liability Limit $	Corporate Seal
	Signature(s)	1.	2.		
	Name(s) & Title(s) (Typed)	1.	2.		
Surety E	Name & Address		State Of Incorporation	Liability Limit $	Corporate Seal
	Signature(s)	1.	2.		
	Name(s) & Title(s) (Typed)	1.	2.		
Surety F	Name & Address		State Of Incorporation	Liability Limit $	Corporate Seal
	Signature(s)	1.	2.		
	Name(s) & Title(s) (Typed)	1.	2.		
Surety G	Name & Address		State Of Incorporation	Liability Limit $	Corporate Seal
	Signature(s)	1.	2.		
	Name(s) & Title(s) (Typed)	1.	2.		

Instructions

1. This form, for the protection of persons supplying labor and material, is used when a payment bond is required under 40 USC Chapter 31, Subchapter III, Bonds. Any deviation from this form will require the written approval of the Administrator of General Services.

2. Insert the full legal name and business address of the Principal in the space designated "Principal" on the face of the form. An authorized person shall sign the bond. Any person signing in a representative capacity (e.g., an attorney-in-fact) must furnish evidence of authority if that representative is not a member of the firm, partnership, or joint venture, or an officer of the corporation involved.

3. (a) Corporations executing the bond as sureties must appear on the Department of the Treasury's list of approved sureties and must act within the limitations listed therein. The value put into the Liability Limit block is the penal sum (i.e., the face value) of the bond, unless a co-surety arrangement is proposed.

   (b) When multiple corporate sureties are involved, their names and addresses shall appear in the spaces (Surety A, Surety B, etc.) headed "Corporate Surety(ies)." In the space designated "Surety(ies)" on the face of the form, insert only the letter identifier corresponding to each of the sureties. Moreover, when co-surety arrangements exist, the parties may allocate their respective limitations of liability under the bonds, provided that the sum total of their liability equals 100% of the bond penal sum.

   (c) When individual sureties are involved, a completed Affidavit of Individual Surety (Standard Form 28) for each individual surety shall accompany the bond. The Government may require the surety to furnish additional substantiating information concerning its financial capability.

4. Corporations executing the bond shall affix their corporate seals. Individuals shall execute the bond opposite the words "Corporate Seal", and shall affix an adhesive seal if executed in Maine, New Hampshire, or any other jurisdiction requiring adhesive seals.

5. Type the name and title of each person signing this bond in the space provided.

Paperwork Reduction Act Statement

This information collection meets the requirements of 44 USC § 3507, as amended by section 2 of the Paperwork Reduction Act of 1995. You do not need to answer these questions unless we display a valid Office of Management and Budget (OMB) control number. The OMB control number for this collection is 9000-0001. We estimate that it will take 1 hour to read the instructions, gather the facts, and answer the questions. Send only comments relating to our time estimate, including suggestions for reducing this burden, or any other aspects of this collection of information to: U.S. General Services Administration, Regulatory Secretariat Division (MVCB), 1800 F Street, NW, Washington, DC 20405.

Attachment # 6
(final invoice)
DOI-137
Release of Claims

DI-137
(March 2017)

UNITED STATES
DEPARTMENT OF THE INTERIOR

RELEASE OF CLAIMS

Contract Number

Date

WHERE AS, by terms of the above contract for

, entered into by the United States of America, hereinafter also referred to as the United States, and the contractor

, it is provided that after completion of all work, and prior to final payment, the contractor will furnish the United States with a release of all claims;

NOW, THEREFORE, in consideration of the above premises and the payment by the United States to the contractor of the amount now due under the contract, to wit, the sum of dollars ($) , the contractor hereby remises, releases, and forever discharges the United States, its officers, agents, and employees, of and from all manner of debts, dues, liabilities, obligations, accounts, claims, and demands whatsoever, in law and in equity, under or by virtue of the said contract except:

IN WITNESS WHEREOF, the contractor has executed this release this day of , 20 .

(Contractor)

By

(Signature)

☐ Corporation ☐ Joint Venture
☐ Partnership ☐ Individual

(Name)

(Street Number or R.F.D.)

(Title)

(City) (State) (Zip Code)

COMPLETE ONLY IF CONTRACTOR IS A CORPORATION

I, CERTIFY That I am the of the corporation named as contractor herein; that , who signed this release on behalf of the corporation, was then of said corporation; and that said release was duly signed for and on behalf of said corporation by authority of its governing body.

[SEAL]

(Signature)

This form was electronically produced by Elite Federal Forms, Inc.

Attachment #7

Wage Determination

"General Decision Number: WY20260043 01/02/2026

Superseded General Decision Number: WY20250043

State: Wyoming

Construction Types: Heavy and Highway

County: Natrona County in Wyoming.

Heavy and Highway Construction Projects

Modification Number	Publication Date
0	01/02/2026

SAWY2025-003 05/01/2025

	Rates	Fringes
Carpenter	$ 27.07	2.37
Concrete Finisher	$ 28.00	7.46
Electrician (Inside Wireman, Outside Lineman and Signal and Lighting work)	$ 58.83	21.89
Equipment Operator (Electrical work)	$ 48.86	18.79
Groundman (Electrical work)	$ 34.68	16.91
Ironworker	$ 35.24	28.33
Laborers (Group 1)	$ 20.99	4.08

Erector & Installer (fences, guardrail & barrier); Flag persons (traffic control); Form stripper; General laborer; Heater tender; Material checker; Pick-up truck driver; Pilot car driver; Pre-watering, presetting & pre-irrigation (all work); Riprap man; Tar & asphalt pot tender

Laborers (Group 2)	$ 22.25	5.56

Asphalt raker and tamper; Bin wall installer; Chain saw operator (clearing & grubbing); Concrete saw (all types); Form setter (paving); Hand operated vibratory roller; High scalar; Jackhammer & pavement breaker; Maintainer (Traffic Control); Nozzle man (air, water, gunnite & sandblasting); Landscaper, landscape laborer; Mortar man on stone riprap; Tamper operator (pneumatic, electric, gas & similar); Painter (brush & spray); Pipe setter (all pipe types); Pot Tender

Laborers (Group 3)	$ 31.05	11.25

Dump man; Miner (driller), Machineman, Timberman, Steelman; Drill Doctor, Form setter and mover, Spader, Spilling and/or Caisson Worker; Powderman, Blaster, Tender; Traffic Control Supervisor; Wagon drill, air-trac., (diamond and other drills for Blasting powder or grouting).

Power Equipment Operators (Group 1)	$ 25.00	6.28

Skid Steer (all attachments); Air Compressor (all types); Backhoes & Excavators (to 5 CY.); Batch Bin Weighman, Scissorman or Hopper; Broom Operator (self propelled); Chip Spreader Operator; Conveyor Belt Operator; Crusher Oiler; Form

Grader Operator; Joint Machine Operator; Longitudinal Float Operator; Oiler, Utility; Power Loader (belt & bucket type); Pump Operator; Roller Operator, self-propelled (Dirt); Tire Repairman (large construction equip. tires); Tractor Operator (farm with/without power attachments); Tugger (all types)

Power Equipment Operators
(Group 2).....$ 28.60 7.44
Articulated Rock Truck (all capacity); Asphalt Plant Operator; Backhoe, Excavator & Shovel (5 CY. & larger); Batch Plant Operator; Bituminous Laydown Machine Operator; Concrete Batch Plant Operator; Concrete Finish Machine Operator; Concrete Spreader & Paver Operator; Concrete Multi Blade Span Saw (Hunt process); Crusher Operator; Dozer Operator (all sizes & power attachments); Drilling Machine, Integrated (core, rotary, caisson, or diamond); Draglines, Cranes, Piledriver & Truck Mounted Cranes (Mfg Rating: less than 3.5 CY. and/or less than 50 tons all attachments); Front End Loaders (up to 10 CY.); Hydro-type Crane (to 50 tons); Mixer Operator, Concrete (over 1 yd.); Motor Patrol Operator (all excluding finish); Mulching Machine Operator; Oiler (crane & shovels); Pavement Breaker, Hydro-Tamper & similar; Roller Operators, Asphalt (steel & pneumatic); Roto-Milling Machine (under 8 ft. wide); Scraper Equipment (all types and sizes); Screed Operator; Trenching Machine Operator

Power Equipment Operators
(Group 3).....$ 30.00 8.56
Draglines, Cranes, Piledrivers & Truck Mounted Cranes (Mfg. Rating: 3.5 CY. or larger, and/or 50 tons and larger all attachments); Front End Loaders (10 CY. & larger); Heavy Duty Mechanic; Welder; Hoist Operator (two or more drums, shafts, or raises); Motor Patrol Operator (finish); Roto-Milling Machine (8 ft. & larger); Mixer Operator (dual drum)

Truck Drivers (Group 1).....$ 26.48 5.60
""A"" Frame truck driver; Coring Machine (self propelled); Dump Truck Driver (to and including 13 CY.); Flat Rack Material Truck Driver (to 5 tons); Fuel Service Truck Driver; Gang Truck Driver; Gravel Spreader; Greaseman, Tireman, Serviceman; Oil Distributor Driver (to & including 3,600 gal.); Power Broom Driver (street sweeper); Snow Plow Driver (the cy. rate of the truck); Transit Mix or Wet Mix Truck Driver; Utility Winch Truck Driver; Water Truck Driver (to & including 3,600 gal.)

Truck Drivers (Group 2).....$ 28.14 7.20
Dump Truck Driver (13 to 45 CY.); Flat Rack Material Truck Driver (over 5 tons); Low Boy & Tandem Axle Float Driver; Multiple Axle Type Truck (semi); Winch Trailer Truck Driver; Water Truck Driver (3,600 gal. & larger); Oil Distributor Driver (3,600 gal. & larger); Truck Mechanics

---

WELDERS - Receive rate prescribed for craft performing operation to which welding is incidental.

==========

Note: Executive Order (EO) 13706, Establishing Paid Sick Leave for Federal Contractors applies to all contracts subject to the Davis-Bacon Act for which the contract is awarded (and any solicitation was issued) on or after January 1, 2017. If this contract is covered by the EO, the contractor must provide employees with 1 hour of paid sick leave for every 30 hours

they work, up to 56 hours of paid sick leave each year. Employees must be permitted to use paid sick leave for their own illness, injury or other health-related needs, including preventive care; to assist a family member (or person who is like family to the employee) who is ill, injured, or has other health-related needs, including preventive care; or for reasons resulting from, or to assist a family member (or person who is like family to the employee) who is a victim of, domestic violence, sexual assault, or stalking. Additional information on contractor requirements and worker protections under the EO is available at https://www.dol.gov/agencies/whd/government-contracts.

Note: Executive Order 13658 generally applies to contracts subject to the Davis-Bacon Act that were awarded on or between January 1, 2015 and January 29, 2022, and that have not been renewed or extended on or after January 30, 2022. Executive Order 13658 does not apply to contracts subject only to the Davis-Bacon Related Acts regardless of when they were awarded. If a contract is subject to Executive Order 13658, the contractor must pay all covered workers at least $13.30 per hour (or the applicable wage rate listed on this wage determination, if it is higher) for all hours spent performing on the contract in 2025. The applicable Executive Order minimum wage rate will be adjusted annually. Additional information on contractor requirements and worker protections under Executive Order 13658 is available at www.dol.gov/whd/govcontracts.

Unlisted classifications needed for work not included within the scope of the classifications listed may be added after award only as provided in the labor standards contract clauses (29CFR 5.5 (a) (1) (iii)).

The body of each wage determination lists the classifications and wage rates that have been found to be prevailing for the type(s) of construction and geographic area covered by the wage determination. The classifications are listed in alphabetical order under rate identifiers indicating whether the particular rate is a union rate (current union negotiated rate), a survey rate, a weighted union average rate, a state adopted rate, or a supplemental classification rate.

Union Rate Identifiers

A four-letter identifier beginning with characters other than ""SU"", ""UAVG"", ?SA?, or ?SC? denotes that a union rate was prevailing for that classification in the survey. Example: PLUM0198-005 07/01/2024. PLUM is an identifier of the union whose collectively bargained rate prevailed in the survey for this classification, which in this example would be Plumbers. 0198 indicates the local union number or district council number where applicable, i.e., Plumbers Local 0198. The next number, 005 in the example, is an internal number used in processing the wage determination. The date, 07/01/2024 in the example, is the effective date of the most current negotiated rate.

Union prevailing wage rates are updated to reflect all changes over time that are reported to WHD in the rates in the collective bargaining agreement (CBA) governing the classification.

Union Average Rate Identifiers

The UAVG identifier indicates that no single rate prevailed for those classifications, but that 100% of the data reported for the classifications reflected union rates. EXAMPLE: UAVG-OH-0010 01/01/2024. UAVG indicates that the rate is a weighted union average rate. OH indicates the State of Ohio. The next number, 0010 in the example, is an internal number used in producing the wage determination. The date, 01/01/2024 in the example, indicates the date the wage determination was updated to reflect the most current union average rate.

A UAVG rate will be updated once a year, usually in January, to reflect a weighted average of the current rates in the collective bargaining agreements on which the rate is based.

Survey Rate Identifiers

The ""SU"" identifier indicates that either a single non-union rate prevailed (as defined in 29 CFR 1.2) for this classification in the survey or that the rate was derived by computing a weighted average rate based on all the rates reported in the survey for that classification. As a weighted average rate includes all rates reported in the survey, it may include both union and non-union rates. Example: SUFL2022-007 6/27/2024. SU indicates the rate is a single non-union prevailing rate or a weighted average of survey data for that classification. FL indicates the State of Florida. 2022 is the year of the survey on which these classifications and rates are based. The next number, 007 in the example, is an internal number used in producing the wage determination. The date, 6/27/2024 in the example, indicates the survey completion date for the classifications and rates under that identifier.

?SU? wage rates typically remain in effect until a new survey is conducted. However, the Wage and Hour Division (WHD) has the discretion to update such rates under 29 CFR 1.6(c)(1).

State Adopted Rate Identifiers

The ""SA"" identifier indicates that the classifications and prevailing wage rates set by a state (or local) government were adopted under 29 C.F.R 1.3(g)-(h). Example: SAME2023-007 01/03/2024. SA reflects that the rates are state adopted. ME refers to the State of Maine. 2023 is the year during which the state completed the survey on which the listed classifications and rates are based. The next number, 007 in the example, is an internal number used in producing the wage determination. The date, 01/03/2024 in the example, reflects the date on which the classifications and rates under the ?SA? identifier took effect under state law in the state from which the rates were adopted.

WAGE DETERMINATION APPEALS PROCESS

1) Has there been an initial decision in the matter? This can be:

a) a survey underlying a wage determination
b) an existing published wage determination
c) an initial WHD letter setting forth a position on a wage determination matter

d) an initial conformance (additional classification
and rate) determination

On survey related matters, initial contact, including requests for summaries of surveys, should be directed to the WHD Branch of Wage Surveys. Requests can be submitted via email to davisbaconinfo@dol.gov or by mail to:

Branch of Wage Surveys
Wage and Hour Division
U.S. Department of Labor
200 Constitution Avenue, N.W.
Washington, DC 20210

Regarding any other wage determination matter such as conformance decisions, requests for initial decisions should be directed to the WHD Branch of Construction Wage Determinations. Requests can be submitted via email to BCWD-Office@dol.gov or by mail to:

Branch of Construction Wage Determinations
Wage and Hour Division
U.S. Department of Labor
200 Constitution Avenue, N.W.
Washington, DC 20210

2) If an initial decision has been issued, then any interested party (those affected by the action) that disagrees with the decision can request review and reconsideration from the Wage and Hour Administrator (See 29 CFR Part 1.8 and 29 CFR Part 7). Requests for review and reconsideration can be submitted via email to dba.reconsideration@dol.gov or by mail to:

Wage and Hour Administrator
U.S. Department of Labor
200 Constitution Avenue, N.W.
Washington, DC 20210

The request should be accompanied by a full statement of the interested party's position and any information (wage payment data, project description, area practice material, etc.) that the requestor considers relevant to the issue.

3) If the decision of the Administrator is not favorable, an interested party may appeal directly to the Administrative Review Board (formerly the Wage Appeals Board). Write to:

Administrative Review Board
U.S. Department of Labor
200 Constitution Avenue, N.W.
Washington, DC 20210.

==========

END OF GENERAL DECISION
"

K - Representations, Certifications, and Other Statements of Bidders

K.1 52.252-1 Solicitation Provisions Incorporated by Reference (FEB 1998)
This solicitation incorporates one or more solicitation provisions by reference, with the same force and effect as if they were given in full text. Upon request, the Contracting Officer will make their full text available. The offeror is cautioned that the listed provisions may include blocks that must be completed by the offeror and submitted with its quotation or offer. In lieu of submitting the full text of those provisions, the offeror may identify the provision by paragraph identifier and provide the appropriate information with its quotation or offer. Also, the full text of a solicitation provision may be accessed electronically at this/these address(es): FAR Provisions - **https://acquisition.gov/far/**

PROVISION NUMBER	CLAUSE TITLE	CLAUSE DATE
52.222-52	Exemption From Application of the Service Contract Labor Standards to Contracts for Certain Services-Certification.	(May 2014)
52.203-11	Certification and Disclosure Regarding Payments to Influence Certain Federal Transactions	(Sept 2024)
52.203-18	Prohibition on Contracting with Entities that Require Certain Internal Confidentiality Agreements or Statements-Representation.	(Jan 2017)
52.204-17	Ownership or Control of Offeror	(Aug 2020)
52.209-7	Information Regarding Responsibility Matters	(Oct 2018)
52.209-2	Prohibition on Contracting with Inverted Domestic Corporations-Representation	(Nov 2015)
52.219-1	Small Business Program Representations	(Feb 2024)
52.222-38	Compliance with Veterans' Employment Reporting Requirements	(Feb 2016)
52.223-4	Recovered Material Certification	(May 2008)
52.223-22	Public Disclosure of Greenhouse Gas Emissions and Reduction Goals-Representation	(Dec 2016)
52.225-25	Prohibition on Contracting With Entities Engaging in Certain Activities or Transactions Relating to Iran—Representation and Certifications	(Jun 2020)
52.240-90	Security Prohibitions and Exclusions Representations and Certifications. (Deviation)	(Mar 2026)

K.2 52.203-2 Certificate of Independent Price Determination (APR 1985)
The offeror certifies that-
The prices in this offer have been arrived at independently, without, for the purpose of restricting competition, any consultation, communication, or agreement with any other offeror or competitor relating to (i) those prices, (ii) the intention to submit an offer, or (iii) the methods or factors used to calculate the prices offered;

The prices in this offer have not been and will not be knowingly disclosed by the offeror, directly or indirectly, to any other offeror or competitor before bid opening (in the case of a sealed bid solicitation) or contract award (in the case of a negotiated solicitation) unless otherwise required by law; and

No attempt has been made or will be made by the offeror to induce any other concern to submit or not to submit an offer for the purpose of restricting competition.
Each signature on the offer is considered to be a certification by the signatory that the signatory-
Is the person in the offeror's organization responsible for determining the prices being offered in this bid or proposal, and that the signatory has not participated and will not participate in any action contrary to subparagraphs (a)(1) through (a)(3) above; or
(2)(i) Has been authorized, in writing, to act as agent for the following principals in certifying that those principals have not participated, and will not participate in any action contrary to subparagraphs (a)(1) through (a)(3) above [*insert full name of person(s) in the offeror's organization responsible for determining the prices offered in this bid or proposal, and the title of his or her position in the offeror's organization*];
As an authorized agent, does certify that the principals named in subdivision (b)(2)(i) above have not participated, and will not participate, in any action contrary to subparagraphs (a)(1) through (a)(3) above; and
As an agent, has not personally participated, and will not participate, in any action contrary to subparagraphs (a)(1) through (a)(3) above.
If the offeror deletes or modifies subparagraph (a)(2) above, the offeror must furnish with its offer a signed statement setting forth in detail the circumstances of the disclosure.

K.3 52.209-5 Certification Regarding Responsibility Matters (Aug 2020)
(a) (1) The Offeror certifies, to the best of its knowledge and belief, that—
(i) The Offeror and/or any of its Principals–

(A) Are □ are not □ presently debarred, suspended, proposed for debarment, or declared ineligible for the award of contracts by any Federal agency;

(B) Have □ have not □, within a three-year period preceding this offer, been convicted of or had a civil judgment rendered against them for: commission of fraud or a criminal offense in connection with obtaining, attempting to obtain, or performing a public (Federal, State, or local) contract or subcontract; violation of Federal or State antitrust statutes relating to the submission of offers; or commission of embezzlement, theft, forgery, bribery, falsification or destruction of records, making false statements, tax evasion, violating Federal criminal tax laws, or receiving stolen property (if offeror checks "have", the offeror shall also see 52.209-7, if included in this solicitation);

(C) Are □ are not □ presently indicted for, or otherwise criminally or civilly charged by a governmental entity with, commission of any of the offenses enumerated in paragraph (a)(1)(i)(B) of this provision;

(D) Have □, have not □, within a three-year period preceding this offer, been notified of any delinquent Federal taxes in an amount that exceeds the threshold at 9.104-5(a)(2) for which the liability remains unsatisfied.

(1) Federal taxes are considered delinquent if both of the following criteria apply:

(i) The tax liability is finally determined. The liability is finally determined if it has been

assessed. A liability is not finally determined if there is a pending administrative or judicial challenge. In the case of a judicial challenge to the liability, the liability is not finally determined until all judicial appeal rights have been exhausted.
(ii) The taxpayer is delinquent in making payment. A taxpayer is delinquent if the taxpayer has failed to pay the tax liability when full payment was due and required. A taxpayer is not delinquent in cases where enforced collection action is precluded.

(2) Examples.

(i) The taxpayer has received a statutory notice of deficiency, under I.R.C. § 6212, which entitles the taxpayer to seek Tax Court review of a proposed tax deficiency. This is not a delinquent tax because it is not a final tax liability. Should the taxpayer seek Tax Court review, this will not be a final tax liability until the taxpayer has exercised all judicial appeal rights.

(ii) The IRS has filed a notice of Federal tax lien with respect to an assessed tax liability, and the taxpayer has been issued a notice under I.R.C. § 6320 entitling the taxpayer to request a hearing with the IRS Office of Appeals contesting the lien filing, and to further appeal to the Tax Court if the IRS determines to sustain the lien filing. In the course of the hearing, the taxpayer is entitled to contest the underlying tax liability because the taxpayer has had no prior opportunity to contest the liability. This is not a delinquent tax because it is not a final tax liability. Should the taxpayer seek tax court review, this will not be a final tax liability until the taxpayer has exercised all judicial appeal rights.

(iii) The taxpayer has entered into an installment agreement pursuant to I.R.C. § 6159. The taxpayer is making timely payments and is in full compliance with the agreement terms. The taxpayer is not delinquent because the taxpayer is not currently required to make full payment.

(iv) The taxpayer has filed for bankruptcy protection. The taxpayer is not delinquent because enforced collection action is stayed under 11 U.S.C. 362 (the Bankruptcy Code).

(ii) The Offeror has □ has not □, within a three-year period preceding this offer, had one or more contracts terminated for default by any Federal agency.

(2) "Principal," for the purposes of this certification, means an officer, director, owner, partner, or a person having primary management or supervisory responsibilities within a business entity (e.g., general manager; plant manager; head of a division or business segment; and similar positions).

This Certification Concerns a Matter Within the Jurisdiction of an Agency of the United States and the Making of a False, Fictitious, or Fraudulent Certification May Render the Maker Subject to Prosecution Under Section 1001, Title 18, United States Code.

(b) The Offeror shall provide immediate written notice to the Contracting Officer if, at any time prior to contract award, the Offeror learns that its certification was erroneous when submitted or has become erroneous by reason of changed circumstances.

(c) A certification that any of the items in paragraph (a) of this provision exists will not necessarily result in withholding of an award under this solicitation. However, the certification will be considered in connection with a determination of the Offeror's responsibility. Failure of the Offeror to furnish a certification or provide such additional information as requested by the Contracting Officer may render the Offeror nonresponsible.

(d) Nothing contained in the foregoing shall be construed to require establishment of a system of records in order to render, in good faith, the certification required by paragraph (a) of this provision. The knowledge and information of an Offeror is not required to exceed that which is normally possessed by a prudent person in the ordinary course of business dealings.

(e) The certification in paragraph (a) of this provision is a material representation of fact upon which reliance was placed when making award. If it is later determined that the Offeror knowingly rendered an erroneous certification, in addition to other remedies available to the Government, the Contracting Officer may terminate the contract resulting from this solicitation for default.

K.4 52.209-7 Information Regarding Responsibility Matters (OCT 2018)

(a) Definitions. As used in this provision—

Administrative proceeding means a non-judicial process that is adjudicatory in nature in order to make a determination of fault or liability (e.g., Securities and Exchange Commission Administrative Proceedings, Civilian Board of Contract Appeals Proceedings, and Armed Services Board of Contract Appeals Proceedings). This includes administrative proceedings at the Federal and State level but only in connection with performance of a Federal contract or grant. It does not include agency actions such as contract audits, site visits, corrective plans, or inspection of deliverables.

Federal contracts and grants with total value greater than $10,000,000 means—

(1) The total value of all current, active contracts and grants, including all priced options; and

(2) The total value of all current, active orders including all priced options under indefinite-delivery, indefinite-quantity, 8(a), or requirements contracts (including task and delivery and multiple-award Schedules).

Principal means an officer, director, owner, partner, or a person having primary management or supervisory responsibilities within a business entity (e.g., general manager; plant manager; head of a division or business segment; and similar positions).

(b) The offeror □ has □ does not have current active Federal contracts and grants with total value greater than $10,000,000.

(c) If the offeror checked "has" in paragraph (b) of this provision, the offeror represents, by submission of this offer, that the information it has entered in the Federal Awardee Performance and Integrity Information System (FAPIIS) is current, accurate, and complete as of the date of

submission of this offer with regard to the following information:

(1) Whether the offeror, and/or any of its principals, has or has not, within the last five years, in connection with the award to or performance by the offeror of a Federal contract or grant, been the subject of a proceeding, at the Federal or State level that resulted in any of the following dispositions:

(i) In a criminal proceeding, a conviction.

(ii) In a civil proceeding, a finding of fault and liability that results in the payment of a monetary fine, penalty, reimbursement, restitution, or damages of $5,000 or more.

(iii) In an administrative proceeding, a finding of fault and liability that results in–

(A) The payment of a monetary fine or penalty of $5,000 or more; or

(B) The payment of a reimbursement, restitution, or damages in excess of $100,000.

(iv) In a criminal, civil, or administrative proceeding, a disposition of the matter by consent or compromise with an acknowledgment of fault by the Contractor if the proceeding could have led to any of the outcomes specified in paragraphs (c)(1)(i), (c)(1)(ii), or (c)(1)(iii) of this provision.

(2) If the offeror has been involved in the last five years in any of the occurrences listed in (c)(1) of this provision, whether the offeror has provided the requested information with regard to each occurrence.

(d) The offeror shall post the information in paragraphs (c)(1)(i) through (c)(1)(iv) of this provision in FAPIIS as required through maintaining an active registration in the System for Award Management, which can be accessed via https://www.sam.gov (see 52.204-7).

K.5 52.209-11 Representation by Corporations Regarding Delinquent Tax Liability or a Felony Conviction under any Federal Law (Feb 2016)

(a) As required by sections 744 and 745 of Division E of the Consolidated and Further Continuing Appropriations Act, 2015 (Pub. L. 113-235), and similar provisions, if contained in subsequent appropriations acts, the Government will not enter into a contract with any corporation that–

(1) Has any unpaid Federal tax liability that has been assessed, for which all judicial and administrative remedies have been exhausted or have lapsed, and that is not being paid in a timely manner pursuant to an agreement with the authority responsible for collecting the tax liability, where the awarding agency is aware of the unpaid tax liability, unless an agency has considered suspension or debarment of the corporation and made a determination that suspension or debarment is not necessary to protect the interests of the Government; or

(2) Was convicted of a felony criminal violation under any Federal law within the

preceding 24 months, where the awarding agency is aware of the conviction, unless an agency has considered suspension or debarment of the corporation and made a determination that this action is not necessary to protect the interests of the Government.

(b) The Offeror represents that–

(1) It is □ is not □ a corporation that has any unpaid Federal tax liability that has been assessed, for which all judicial and administrative remedies have been exhausted or have lapsed, and that is not being paid in a timely manner pursuant to an agreement with the authority responsible for collecting the tax liability; and

(2) It is □ is not □ a corporation that was convicted of a felony criminal violation under a Federal law within the preceding 24 months.

K.6 52.209-12 Certification Regarding Tax Matters (OCT 2025)

(a) This provision implements section 523 of Division B of the Consolidated and Further Continuing Appropriations Act, 2015 (Pub. L. 113-235), and similar provisions, if contained in subsequent appropriations acts.

(b) If the Offeror is proposing a total contract price that will exceed $7 million (including options), the Offeror shall certify that, to the best of its knowledge and belief, it

1) Has □ filed all Federal tax returns required during the three years preceding the certification;
2) Has not □ been convicted of a criminal offense under the Internal Revenue Code of 1986; and
3) Has not □, more than 90 days prior to certification, been notified of any unpaid Federal tax assessment for which the liability remains unsatisfied, unless the assessment is the subject of an installment agreement or offer in compromise that has been approved by the Internal Revenue Service and is not in default, or the assessment is the subject of a non-frivolous administrative or judicial proceeding.

K.7 52.209-13 Violation of Arms Control Treaties or Agreements- Certification (Nov 2021)

(a) This provision does not apply to acquisitions at or below the simplified acquisition threshold or to acquisitions of commercial products and commercial services as defined in Federal Acquisition Regulation 2.101.

(b) Certification. [Offeror shall check either (1) or (2).]

__ (1) The Offeror certifies that–

(i) It does not engage and has not engaged in any activity that contributed to or was a significant factor in the President's or Secretary of State's determination that a foreign country is in violation of its obligations undertaken in any arms control, nonproliferation, or disarmament agreement to which the United States is a party, or is not adhering to its arms control, nonproliferation, or disarmament commitments in which the United States is a participating state. The determinations are described in the most recent unclassified annual report provided to Congress pursuant to

section 403 of the Arms Control and Disarmament Act (22 U.S.C. 2593a). The report is available at https://www.state.gov/bureaus-offices/under-secretary-for-arms-control-and-international-security-affairs/bureau-of-arms-control-verification-and-compliance/; and

(ii) No entity owned or controlled by the Offeror has engaged in any activity that contributed to or was a significant factor in the President's or Secretary of State's determination that a foreign country is in violation of its obligations undertaken in any arms control, nonproliferation, or disarmament agreement to which the United States is a party, or is not adhering to its arms control, nonproliferation, or disarmament commitments in which the United States is a participating state. The determinations are described in the most recent unclassified annual report provided to Congress pursuant to section 403 of the Arms Control and Disarmament Act (22 U.S.C. 2593a). The report is available at https://www.state.gov/bureaus-offices/under-secretary-for-arms-control-and-international-security-affairs/bureau-of-arms-control-verification-and-compliance/; or

__ (2) The Offeror is providing separate information with its offer in accordance with paragraph (d)(2) of this provision.
(c) Procedures for reviewing the annual unclassified report (see paragraph (b)(1) of this provision). For clarity, references to the report in this section refer to the entirety of the annual unclassified report, including any separate reports that are incorporated by reference into the annual unclassified report.

(1) Check the table of contents of the annual unclassified report and the country section headings of the reports incorporated by reference to identify the foreign countries listed there. Determine whether the Offeror or any person owned or controlled by the Offeror may have engaged in any activity related to one or more of such foreign countries.

(2) If there may have been such activity, review all findings in the report associated with those foreign countries to determine whether or not each such foreign country was determined to be in violation of its obligations undertaken in an arms control, nonproliferation, or disarmament agreement to which the United States is a party, or to be not adhering to its arms control, nonproliferation, or disarmament commitments in which the United States is a participating state. For clarity, in the annual report an explicit certification of non-compliance is equivalent to a determination of violation. However, the following statements in the annual report are not equivalent to a determination of violation:

(i) An inability to certify compliance.

(ii) An inability to conclude compliance.

(iii) A statement about compliance concerns.

(3) If so, determine whether the Offeror or any person owned or controlled by the Offeror has engaged in any activity that contributed to or is a significant factor in the determination in the report that one or more of these foreign countries is in violation of its obligations undertaken in an arms control, nonproliferation, or disarmament agreement to which the United States is a

party, or is not adhering to its arms control, nonproliferation, or disarmament commitments in which the United States is a participating state. Review the narrative for any such findings reflecting a determination of violation or non-adherence related to those foreign countries in the report, including the finding itself, and to the extent necessary, the conduct giving rise to the compliance or adherence concerns, the analysis of compliance or adherence concerns, and efforts to resolve compliance or adherence concerns.

(4) The Offeror may submit any questions with regard to this report by email to NDAA1290Cert@state.gov. To the extent feasible, the Department of State will respond to such email inquiries within 3 business days.

(d) Do not submit an offer unless—

(1) A certification is provided in paragraph (b)(1) of this provision and submitted with the offer; or

(2) In accordance with paragraph (b)(2) of this provision, the Offeror provides with its offer information that the President of the United States has

(i) Waived application under 22 U.S.C. 2593e(d) or (e); or

(ii) Determined under 22 U.S.C. 2593e(g)(2) that the entity has ceased all activities for which measures were imposed under 22 U.S.C. 2593e(b).

(e) Remedies. The certification in paragraph (b)(1) of this provision is a material representation of fact upon which reliance was placed when making award. If it is later determined that the Offeror knowingly submitted a false certification, in addition to other remedies available to the Government, such as suspension or debarment, the Contracting Officer may terminate any contract resulting from the false certification.

L - Instructions, Conditions, and Notices to Bidders

L.1 52.252-1 Solicitation Provisions Incorporated by Reference (FEB 1998)

This solicitation incorporates one or more solicitation provisions by reference, with the same force and effect as if they were given in full text. Upon request, the Contracting Officer will make their full text available. The offeror is cautioned that the listed provisions may include blocks that must be completed by the offeror and submitted with its quotation or offer. In lieu of submitting the full text of those provisions, the offeror may identify the provision by paragraph identifier and provide the appropriate information with its quotation or offer. Also, the full text of a solicitation provision may be accessed electronically at this/these address(es): https://www.acquisition.gov/far/

PROVISION NUMBER	CLAUSE TITLE	CLAUSE DATE
52.204-7	System for Award Management – Registration (Deviation)	(Apr 2026)
52.214-34	Submission of Offers in the English Language	(Apr 1991)
52.214-35	Submission of Offers in U.S. Currency	(Apr 1991)
52.215-1	Instructions to Offerors-Competitive Acquisition	(Nov 2021)
52.216-27	Single or Multiple Awards	(Oct 1995)
52.228-17	Individual Surety—Pledge of Assets	(Feb 2021)
52.233-2	Service of Protest	(Sept 2006)

L.2 52.216-1 Type of Contract (Apr 1984)

The Government contemplates a stand-alone firm fixed price contract resulting from this solicitation.

L.3 52.222-5 Construction Wage Rate Requirements-Secondary Site of the Work (May 2014)

(a) (1) The offeror shall notify the Government if the offeror intends to perform work at any secondary site of the work, as defined in paragraph (a)(1)(ii) of the FAR clause at 52.222-6, Construction Wage Rate Requirements, of this solicitation.

(2) If the offeror is unsure if a planned work site satisfies the criteria for a secondary site of the work, the offeror shall request a determination from the Contracting Officer.

(b) (1) If the wage determination provided by the Government for work at the primary site of the work is not applicable to the secondary site of the work, the offeror shall request a wage determination from the Contracting Officer.

(2) The due date for receipt of offers will not be extended as a result of an offeror's request for a wage determination for a secondary site of the work.

L.4 52.225-10 Notice of Buy American Requirement-Construction Materials (MAY 2014)

(a) Definitions. "Commercially available off-the-shelf (COTS) item," "construction material," "domestic construction material," and "foreign construction material," as used in this provision, are defined in the clause of this solicitation entitled "Buy American-Construction Materials" (Federal Acquisition Regulation (FAR) clause 52.225-9).

(b) Requests for determinations of inapplicability. An offeror requesting a determination regarding the inapplicability of the Buy American statute should submit the request to the Contracting Officer in time to allow a determination before submission of offers. The offeror shall include the information and applicable supporting data required by paragraphs (c) and (d) of the clause at FAR 52.225-9 in the request. If an offeror has not requested a determination regarding the inapplicability of the Buy American statute before submitting its offer, or has not received a response to a previous request, the offeror shall include the information and supporting data in the offer.

(c) Evaluation of offers. (1) The Government will evaluate an offer requesting exception to the requirements of the Buy American statute, based on claimed unreasonable cost of domestic construction material, by adding to the offered price the appropriate percentage of the cost of such foreign construction material, as specified in paragraph (b)(3)(i) of the clause at FAR 52.225-9.
(2) If evaluation results in a tie between an offeror that requested the substitution of foreign construction material based on unreasonable cost and an offeror that did not request an exception, the Contracting Officer will award to the offeror that did not request an exception based on unreasonable cost.

(d) Alternate offers. (1) When an offer includes foreign construction material not listed by the Government in this solicitation in paragraph (b)(2) of the clause at FAR 52.225-9, the offeror also may submit an alternate offer based on use of equivalent domestic construction material.
(2) If an alternate offer is submitted, the offeror shall submit a separate Standard Form 1442 for the alternate offer, and a separate price comparison table prepared in accordance with paragraphs (c) and (d) of the clause at FAR 52.225-9 for the offer that is based on the use of any foreign construction material for which the Government has not yet determined an exception applies.

(3) If the Government determines that a particular exception requested in accordance with paragraph (c) of the clause at FAR 52.225-9 does not apply, the Government will evaluate only those offers based on use of the equivalent domestic construction material, and the offeror shall be required to furnish such domestic construction material. An offer based on use of the foreign construction material for which an exception was requested-

(i) Will be rejected as nonresponsive if this acquisition is conducted by sealed bidding; or

(ii) May be accepted if revised during negotiations.

L.5 52.252-5 Authorized Deviations in Provisions (NOV 2020)

The use in this solicitation of any Federal Acquisition Regulation (48 CFR chapter 1) provision with an authorized deviation is indicated by the addition of (DEVIATION) after the date of the provision.

The use in this solicitation of any Department of the Interior Acquisition Regulation (48 CFR chapter 14) provision with an authorized deviation is indicated by the addition of (DEVIATION) after the name of the regulation.

L.6 1452.215-71 Use and Disclosure of Proposal Information – Department of The Interior (APR 1984)

Definitions. For the purposes of this provision and the Freedom of Information Act (5 U.S.C. 552), the following terms shall have the meaning set forth below:

"Trade Secret" means an unpatented, secret, commercially valuable plan, appliance, formula, or process, which is used for making, preparing, compounding, treating or processing articles or materials which are trade commodities.

"Confidential commercial or financial information" means any business information (other than trade secrets) which is exempt from the mandatory disclosure requirement of the Freedom of Information Act, 5 U.S.C. 552. Exemptions from mandatory disclosure which may be applicable to business information contained in proposals include exemption (4), which covers "commercial and financial information obtained from a person and privileged or confidential," and exemption (9), which covers "geological and geophysical information, including maps, concerning wells."

If the offeror, or its subcontractor(s), believes that the proposal contains trade secrets or confidential commercial or financial information exempt from disclosure under the Freedom of Information Act, (5 U.S.C. 552), the cover page of each copy of the proposal shall be marked with the following legend:

"The information specifically identified on pages___of this proposal constitutes trade secrets or confidential commercial and financial information which the offeror believes to be exempt from disclosure under the Freedom of Information Act. The offeror requests that this information not be disclosed to the public, except as may be required by law. The offeror also requests that this information not be used in whole or part by the government for any purpose other than to evaluate the proposal, except that if a contract is awarded to the offeror as a result of or in connection with the submission of the proposal, the Government shall have the right to use the information to the extent provided in the contract."

The offeror shall also specifically identify trade secret information and confidential commercial and financial information on the pages of the proposal on which it appears and shall mark each such page with the following legend: "This page contains trade secrets or confidential commercial and financial information which the offeror believes to be exempt from disclosure under the Freedom of Information Act and which is subject to the legend contained on the cover page of this proposal."

Information in a proposal identified by an offeror as trade secret information or confidential commercial and financial information shall be used by the Government only for the purpose of evaluating the proposal, except that (i) if a contract is awarded to the offeror as a result of or in

connection with submission of the proposal, the Government shall have the right to use the information as provided in the contract, and (ii) if the same information is obtained from another source without restriction it
may be used without restriction.

If a request under the Freedom of Information Act seeks access to information in a proposal identified as trade secret information or confidential commercial and financial information, full consideration will be given to the offeror's view that the information constitutes trade secrets or confidential commercial or financial information. The offeror will also be promptly notified of the request and given an opportunity to provide additional evidence and argument in support of its position, unless administratively unfeasible to do so. If it is determined that information claimed by the offeror to be trade secret information or confidential commercial or financial information is not exempt from disclosure under the Freedom of Information Act, the offeror will be notified of this determination prior to disclosure of the information.

The Government assumes no liability for the disclosure or use of information contained in a proposal if not marked in accordance with paragraphs (b) and (c) of this provision. If a request under the Freedom of Information Act is made for information in a proposal not marked in accordance with paragraphs (b) and of this provision, the offeror concerned shall be promptly notified of the request and given an opportunity to provide its position to the Government. However, failure of an offeror to mark information contained in a proposal as trade secret information or confidential commercial or financial information will be treated by the Government as evidence that the information is not exempt from disclosure under the Freedom of Information Act, absent a showing that the failure to mark was due to unusual or extenuating circumstances, such as a showing that the offeror had intended to mark, but that markings were omitted from the offeror's proposal due to clerical error.

L.7 WBR 1452.215-80 Source Selection Evaluation Procedures – BOR (MAR 2021)

The Government intends to evaluate proposals submitted under this solicitation and select a source for contract award without discussions (unless the contracting officer later determines discussions to be necessary) in accordance with the following provision: FAR 52.215-1 Instructions to Offerors -- Competitive Acquisition (Jan 2017). Source selection shall be in accordance with procedures contained in FAR Part 15, Department of the Interior Acquisition Regulation (DIAR) Part 1415 (48 CFR 1415) and Bureau of Reclamation Acquisition Regulation WBR Part 1415. These procedures are summarized as follows:

(a) Technical evaluation. A Technical Proposal Evaluation Committee (TPEC) has been established to objectively evaluate technical proposals in accordance with the Evaluation Factors for Award -- Bureau of Reclamation provision of this solicitation. Technical proposals shall be submitted in accordance with the Proposal Instructions -- Bureau of Reclamation provision of this solicitation.
(b) Past performance evaluation. In addition to any other past performance information required under the solicitation, the contracting officer shall use past performance information available from the Contractor Performance Assessment Reporting System

(CPARS) in the source selection process on offerors competing for awards in excess of the simplified acquisition threshold, unless the contracting officer has documented an exception from past performance consideration in accordance with FAR 15.304(c)(2)(iv).

(c) Cost or price evaluation. An objective cost or price evaluation of contract pricing proposals will be made in accordance with the Evaluation Factors for Award provision of this solicitation. Pricing proposals shall be submitted in accordance with the Proposal Instructions -- Bureau of Reclamation provision of this solicitation. A cost or price analysis will be performed to determine price reasonableness and any instances of unbalanced pricing, using one or more of the techniques at FAR 15.404-1.

L.8 WBR 1452.215-81 Proposal Instructions – Bureau of Reclamation (MAR 2021)

This procurement will be conducted in accordance with FAR Part 15.

In addition to the requirements of the Instructions to Offerors - Competitive Acquisitions provision of this solicitation (see FAR 52.215-1), each offeror shall submit a proposal in accordance with the instructions contained in this provision.

(a) Use and Disclosure of Proposal Information. In accordance with the Use and Disclosure of Proposal Information -- Department of the Interior provision of this solicitation (see DIAR 1452.215-71), offerors shall mark trade-secret or confidential commercial or financial information contained in the proposal with the restrictive legends specified. The offeror shall also clearly and separately mark all proprietary information (as defined in FAR 3.104-3) contained in the proposal with the restrictive legend "Proprietary Information."

(b)Proposal Volumes. Offerors shall submit separate Volumes with the required number of copies as follows:

Volume	Title	Copies Required
I	Business Proposal	one (1) electronic copy emailed terra_warren@ios.doi.gov
II	Technical Proposal	one (1) electronic copy, emailed to terra_warren@ios.doi.gov
III	Pricing Proposal	one (1) electronic copy, emailed to terra_warren@ios.doi.gov

(c)General Contents. Each separate proposal Volume shall:

(1) Be presented in a manner which allows it to “stand alone” without the need to reference other documents;
(2) Be a coherent document free of internal inconsistencies as well as inconsistencies with other volumes of the proposal;
(3) Conform to all solicitation provisions, clauses, or requirements;
(4) Address the submission requirements with specificity and detail where required;
(5) Be an orderly, specific, and complete document in every detail;

(6) Be logically presented, using clear and concise language so that it can be easily read and meaningfully evaluated by Reclamation personnel from a variety of different functional and technical disciplines;
(7) Have all pages in each volume consecutively numbered (including pages with tables and exhibits) and cross-referenced to other volumes where appropriate for each; and
(8) Indicate how the proposal conforms to the evaluation criteria identified in Section M.

(d) Format. To assist in the uniform evaluation of proposals, the following format shall be used in preparing each separate proposal Volume:
(1) Provide a Table of Contents which lists all sections specific to the proposal Volume;
(2) Cross-reference the work statement to the terms of the proposal and indicate how the proposal conforms to the evaluation factors contained in Part IV, Section M;
(3) Provide a list of any enclosures, including tables, drawings, charts, or other enclosures which summarize data or information;

(e)Volume I, Business Proposal. Volume I shall incorporate the other Volumes by reference but shall not physically include them. It shall consist of:

(1) A fully executed Solicitation, Offer, and Award form required by Part I, Section A of this solicitation. It shall be used as the cover sheet (or first page) of Volume I.
(2) **Full Name of Company, Main Contact for the Project Including Phone Number and E- Mail Address, Company Address, Company Phone Number, Company UEI Number.**
(3) Fully executed and completed offeror representations, certifications, and acknowledgments required by Part IV, Section K of this solicitation;
(4) Additional information required by the solicitation to be furnished by the offeror which is not required to be obtained in another volume of the proposal;
(5) Make-or-buy program (if applicable);
(6) Requests for any waivers of any solicitation provisions or contract clauses; and
(7) A summary of any exemptions from, or deviations to, any other solicitation requirements.
(8) Do not include any pricing information in Volume 1.

(f) Volume II - Technical Plan.
(1) Technical Proposal. The technical proposal should convincingly describe the capability of the offeror's organization to participate in this project and effectively demonstrate a thorough understanding of the work statement contained in Part I, Section C of this solicitation. To assist in the uniform evaluation of proposals, the following format shall be utilized in preparing the technical proposal:
    (1) Table of Contents. The Table of Contents shall list all sections of the technical proposal. Any future amendments, additions and/or revisions to the proposal shall be included in an updated Table of Contents;
    (2) Index. The Index section shall cross reference the statement of work, specifications, or performance work statement to the terms of the proposal and indicate how the proposal conforms to the evaluation factors contained in Part IV, Section M;
    (3) Enclosures. The Enclosures Section shall include a list of any tables,

drawings, charts, and any other enclosures which summarize data or information;

(4) Executive Summary. The Executive Summary shall include a brief discussion of how the required work will be performed and important highlights of the proposal.

(5) **Factor 1: Technical Capability**

The Offeror shall submit a Technical Narrative describing how the UPS will be provided, installed, tested, and commissioned, along with manufacturer product data sheets, technical brochures, and cut sheets demonstrating that all required UPS specifications are met or exceeded. The Offeror shall also provide detailed descriptions of at least two UPS replacement projects, electrical system upgrades, or industrial control power system projects completed within the last three years.

For each project, the Offeror shall provide

(1) Name and location of the project
(2) Description of the work performed
(3) Original completion time and date and actual completion dates and durations
(4) Acquiring agency's name, address, and telephone number
(5) Initial contract value and the final contract value including all modifications
(6) Percentage of work self-performed and subcontracted
(7) Problems encountered and corrective actions taken,
(8) Name, telephone number, and email address of at least one reference who may be contacted for additional information.

(6) **Factor 2: Schedule**

The Offeror shall submit a Project Execution Plan (PEP) and a project schedule prepared using the Critical Path Method (CPM) or an equivalent technique. The submission shall include a logic diagram depicting task relationships and dependencies, and a bar chart showing activities, durations, anticipated start and finish dates, float, submittals, and material procurement milestones. The Offeror shall identify onsite crew size, trades utilized, and weekly work hours. All anticipated downtime windows must be identified, along with the Offeror's plan to minimize operational impact. The submission must also describe the mitigation measures the Offeror will implement to maintain or recover the schedule in the event of delays or unforeseen conditions, and it must fully represent the sequence of demolition, removal, installation, testing, and commissioning activities.

(7) **Factor 3: Past Performance**

The references provided under Technical Capability above will be used to evaluate past performance. The Government may also utilize CPARS (Contractor Performance Assessment Reporting System) at www.cpars.gov

for projects completed during the past 3 years which are similar in scope and magnitude to the work required under this solicitation.

The Government may also use past performance information for all parties obtained from other than the sources identified by the offeror. Evaluating past performance and experience may include information provided by the firm, customer inquiries, Government databases, and other publicly available sources. Failure to provide requested data, accessible points of contact, or valid phone numbers could result in a firm being considered less qualified.

(g) Volume III, Factor 4: Price Proposal.

Offerors are hereby notified that even though cost or pricing data are not initially requested in this solicitation, the Contracting Officer reserves the right to request such data if they are later found necessary pursuant to FAR 15.403-5(a)(1).

To assist in the uniform evaluation of proposals, the following format shall be utilized in preparing the pricing proposal:

1. Table of contents. The Table of Contents shall list all sections of the pricing proposal. Any modifications or revisions to the proposal, up to the date of agreement on price, shall include an updated Table of Contents;

2. Index. The index shall cross reference the work statement to the terms of the proposal and indicate how the proposal conforms to the evaluation factors contained in Part IV, Section M of this solicitation;

3. Enclosures. A list shall be included of all enclosures, attachments, tables, drawings, charts, and any other material which summarize data or information contained or referenced in the pricing proposal;

4. The price proposal should be consistent with the technical approach(es) proposed in the technical proposal, Volume II;

5. Pricing proposal breakdown. The offeror shall submit Section B of the contract Schedule (Schedule of Supplies and Services, found in Part I of this solicitation), including any attached Price Schedules noted in Section B, with its proposed total prices/costs for each contract line item number (CLIN), including any options, and proposed unit price(s), if required. In addition, a total proposed price consisting of the sum of all contract line items (excluding options) shall be submitted.

Offerors are hereby notified that even though additional data to support proposed prices are not initially requested in this solicitation, the Contracting Officer reserves the right to request such data if they are later found necessary.

6. No cost information shall be included in any of the other volumes;

7. All price or cost amounts shall be expressed to the nearest whole dollar except for individual hourly labor rates (if required). All percentages shall be expressed to two decimal places.

8. The following items will be retained and applied to all future contract modifications, as applicable. This approach allows the Government to rely on the rates established through the initial competition as the basis for determining price reasonableness throughout contract performance, thereby streamlining the review and approval process for subsequent modifications. These items will remain in effect for the entire period of performance, including all modification actions issued after award.
    a. – Overhead Rate
    b. – Profit Rate
    c. – General and Administrative (G&A) Rate if applied/applicable
    d. – Pass-Through overhead and profit rates for subcontractors
    e. – Equipment Rates – per piece of equipment
    f. – Labor Rates – if over Davis-Bacon-Act (DBA) or non-applicable to DBA wage determination (e.g. key personnel, professional categories).

L.9 1452.233-2 Service of Protest Department of The Interior (Jul 1996)(Deviation)

Protests, as defined in section 33.101 of the Federal Acquisition Regulation, that are filed directly with an agency, and copies of any protests that are filed with the Government Accountability Office (GAO), shall be served on the Contracting Officer (addressed as follows) by obtaining written and dated acknowledgment of receipt from:

Terra C Warren, Contracting Officer
Bureau of Reclamation – Missouri Basin Region 2021 4th Avenue North
PO Box 36900
Billings, MT 59101 Terra_Warren@ios.doi.gov
The copy of any protest shall be received in the office designated above within one day of filing a protest with the GAO.

A copy of the protest served on the Contracting Officer shall be simultaneously furnished by the protester to the Department of the Interior Assistant Solicitor, Acquisitions and Intellectual Property, 1849 C Street, NW., Room 6511, Washington, DC 20240.

L.10 WBR 1452.236-85 Instruction For Mobilization and Preparatory Work schedule line item – Bureau of Reclamation (MAR 2022)

The contracting officer estimates that the Section B Mobilization and Preparatory Work schedule line item should not exceed five (5) percent of the total bid price. Your attention is directed to contract clause WBR 1452.232-81 Payment for Mobilization and Preparatory Work ALT I, which reflects how the Government will pay for this line item, including how payment will be made when the price bid for this schedule line item is higher than the percentage stated herein.

L.11 WBR 1452.237-80 Alt III Security Requirements – Bureau of Reclamation – Alternate III (MAR 2022)

(a) General Security Requirements:

(1) This clause addresses security requirements, including general procedural requirements, information security requirements, contractor employee suitability requirements, identification card requirements, site security requirements, vessel exclusion barriers, and information technology security requirements. Within this clause, COR means Contracting Officer's Representative. If there is no COR appointed and identified to the Contractor, the term instead will mean the Program Manager or any other authorized individual responsible for technical oversight under the contract. "Work site" means the Government facility, office, construction site, and any other area within the Government office or facility that the Contractor must access to accomplish work under this contract.

(2) The work performed under this contract shall only be accomplished by individuals (in the employment of the Contractor or any subcontractors) whose conduct and behavior is consistent with the efficiency of the Federal Service and the requirements of this contract, and who are acceptable to the contracting officer. If Reclamation finds a Contractor employee to be unsuitable or unfit for his or her assigned duties, the contracting officer will direct the Contractor to remove the individual from the contract and access to the Federal facility at which the contract activities are occurring.

(3) The Contractor's employees governed by this contract may need access to sensitive information and/or sensitive areas. The Federal Government (Government) reserves the right, in its sole discretion, to determine suitability of Contractor personnel and deny access to any sensitive information or project specific area to any personnel for any cause.

(4) The Contractor is responsible for informing and ensuring compliance by its employees with any applicable security procedures of the Government facility where work may be performed under this contract.

(5) All Contractor personnel, including subcontractor personnel, with access to the work site shall be U.S. citizens or foreign individuals legally residing in, or legally admitted to, the U.S. For all non-U.S. citizens working under this contract, irrespective of length of time working on the contract, the Contractor shall provide to the COR, legible and valid copies of the individual's passport and visa (unless individual is on the Visa Waiver Program) a minimum of 14 calendar days prior to beginning work or arriving at the facility. A driver's license is not acceptable identification. In addition, a completed form I-94 shall be submitted to the COR upon the individual's arrival at the work facility and prior to beginning work.

(6) The Contractor shall report all contacts with entities, individuals, and counsel/representatives (including foreign entities and foreign nationals) who seek in any way to obtain unauthorized access to sensitive information or areas. The Contractor shall report any violations of contract provisions, laws, executive orders, regulations, and guidance to the contracting officer. The Contractor shall report any information raising a doubt as to whether an individual's eligibility for continued employment or access to sensitive information is consistent with the interests of National Security and the Public Trust.

(7) Unsanctioned, negligent, or willful inappropriate action on the part of the Contractor (or its employees) may result in termination of the contract or removal of some Contractor employees from Reclamation facilities at no cost to the Government. These actions include, but are not limited to, exploration of a sensitive system and/or information, introduction of unauthorized and/or malicious software, inappropriate release of sensitive information, or failure to follow prescribed access control policies and/or security procedures. Failure to comply with Reclamation policies, procedures, or other published security requirements may result in termination of the contract or removal of some contracted employees from Reclamation buildings and/or facilities at no cost to the Government.

(8) All provisions of this clause shall equally apply to all subcontractors. The Contractor shall incorporate the substance of this clause in all subcontracts.

(9) These security requirements apply to all sections of this Contract including Contract Drawings and other Contract Specifications as applicable. Related documents include other general provisions of Construction or Operations and Maintenance type Contracts, including FAR clauses by reference or as amended by related documents.

(b) Information Security Requirements.
(1) Sensitive Information. The term "sensitive information" means any information which warrants a degree of protection and administrative control as defined by Reclamation or that meets the criteria for exemption from public disclosure set forth under Sections 552 and 552a of Title 5, United States Code: the Freedom of Information Act and the Privacy Act. Sensitive information is generally categorized as CONTROLLED UNCLASSIFIED INFORMATION (CUI), but in some cases may include other unclassified information. (The protection of National Security information is beyond the scope of this clause. If any work on National Security information is required under this contract, it is addressed under other contract clauses.) The Contractor shall protect this type of information from unauthorized release into public domain, or to unauthorized persons, organizations, or subcontractors. Information which, either alone or in aggregate, is deemed sensitive by Reclamation shall be handled and protected in accordance with Reclamation Directives and Standards SLE 02-01 Identifying and Safeguarding Controlled Unclassified Information (CUI), which is available from the COR or at http://www.usbr.gov/recman/DandS.html#sle.

(i) Any Government-furnished information or material does not become the property of the Contractor and may be withdrawn at any time. Upon expiration or termination of the contract, all documents released to the Contractor and any material created using data from such documents shall be returned to the COR for final disposition. Government-furnished information residing on any electronic systems (laptops, servers, desktops, media) shall be deleted from those systems using a COR-approved data erasure solution. Only with prior authorization from the contracting officer may the Contractor retain the material. The Contractor or subcontractor shall not disclose or release the materials provided to the Contractor to any individuals of the Contractor's organization not directly engaged in providing services under the contract or that do not have a valid need-to-

know. All technical data provided to the Contractor by the Government shall be protected from public or private disclosure in accordance with the markings printed on them. All other information relating to the items to be delivered or the services to be performed under this contract shall not be disclosed by any means without prior approval of the contracting officer. Prohibited dissemination or disclosure includes, but is not limited to: permitting access to such information by foreign nationals or by immigrant aliens who may be employed by the Contractor, publication of technical or scientific papers, advertising, disclosure to Contractor staff not investigated and deemed acceptable at the appropriate information sensitivity level, and any other public release. The Contractor shall maintain, and furnish upon request of the contracting officer, records of the names of individuals who have access to sensitive material in its custody and the sensitive material to which the individuals had access. All questions regarding information security, access, and control shall be referred to the COR.

(ii) The Contractor shall not release to anyone outside the Contractor's organization any sensitive, or otherwise protected information, regardless of medium in which it is contained (for example, film, tape, document, electronic), pertaining to any part of this contract or any Reclamation program or activity, unless the contracting officer has given prior written approval. This includes, but is not limited to, news releases, marketing promotions, articles, interviews, reports, social media posts, and any other media releases. Requests for approval shall identify the specific information to be released, the medium to be used, the purpose for the release, and a description of the need-to-know. The Contractor shall submit its request to the contracting officer ten business days before the proposed date for release. Subcontractors shall submit requests for authorization to release through the prime Contractor to the contracting officer.

(iii) The Contractor shall notify the COR immediately when known or suspected loss/compromise of sensitive information or other documents, notes, drawings, sketches, reports, photographs, exposed film or similar information which may affect the security interests of Government has occurred. This requirement extends to employees and other personnel working on behalf of the Contractor, and expands responsibility to include prompt reporting of security issues, including observed or subsequently discovered efforts by unauthorized persons to gain unauthorized access to sensitive information.

(2) Classified Information.

(i) The disclosure of U.S. Government documents by third parties can result in damage to our national security. While this contract may not deal directly with classified information, each contractor is obligated to protect classified information pursuant to all applicable laws and to use Government information technology systems in accordance with agency procedures so that the integrity of such systems is not compromised.

(ii) Unauthorized disclosures of classified documents (whether in print, on a blog, or on websites, or other electronic or non-electronic media) do not alter the documents' classified status or automatically result in declassification of the documents. To the contrary, classified information, whether or not already posted on public websites or

disclosed to the media, remains classified, and must be treated as such by Federal employees and contractors, until it is declassified by an appropriate U.S. Government authority. Executive Order 13526, Classified National Security Information (December 29, 2009), Section 1.1.(c) states, "Classified Information shall not be declassified automatically as a result of any unauthorized disclosure of identical or similar information." Although the Department has taken steps to prevent access to publicly disclosed classified materials from Departmental computers, it is important to understand our continuing duties and responsibilities in this regard.

(iii) Contractors (which include all employees of the contractor, as well as subcontractors and its employees performing work for the contractor) are reminded of the following obligations with respect to the treatment of classified information and the use of unclassified government information technology systems:

(iv) The contractor shall not, while using unclassified Government computers or other devices (such as phones or tablets) access documents that are marked classified (including classified documents made publicly available by a third party), as doing so risks that material still classified will be placed onto unclassified systems. This requirement does not restrict contractor access to unclassified, publicly available news reports (and other unclassified material) that may in turn discuss classified material, as distinguished from access to underlying documents that themselves are marked classified (including if the underlying classified documents are available on public web sites or otherwise in the public domain).

(v) For contracts that require access to classified information, the contractor is responsible for obtaining the required national security clearance through the Department of the Defense National Industrial Security Program Operating Manual (NISPOM). Any classified contracts will be coordinated through the Reclamation Chief Security Officer, or for IT requirements, the Bureau Chief Information Security Officer. No contractor shall access classified information unless proper clearances have been obtained and transmitted to Reclamation. For further information, refer to 443 DM 1 or DOD NISPOM 5220.22-M dated February 28, 2006 (incorporating change 2 dated May 18, 2016).

(vi) Classified information shall not be removed from official premises.

(vii) Classified information shall not be disclosed without proper authorization.

(c) Reserved

(d) Reserved

(e) Site Security Requirements

(1) General Description. This section provides provisions to ensure the full security integrity of the facility and personnel working at the facility. The work of this section may involve interfaces with a number of Government security personnel, normally coordinated through the designated COR. The Contractor is responsible for ensuring that

activities are accomplished in a manner that complies fully with applicable security statutes, regulations, policies, directives, and standards.

(2) Government Security Personnel. When and where applicable, personnel may be assigned to control access, secure materials or activities at the work site, or escort Contractor personnel in sensitive areas. Personnel may include security managers, security guards, security contractors acting as agents of the Government, law enforcement personnel, or other contractors or employees. These individuals may be used to ensure the overall security and integrity of the site or building and provide controlled access. These individuals may conduct inspections of all workers, vehicles, equipment, or materials entering, or re-entering the work site. The inspection may be done visually, with walk-through and/or hand-held metal detectors, or by other means as may be deemed necessary by Reclamation.

(3) Contractor Guard Force. At the Contractor's sole discretion, and at the Contractor's own expense, with prior written Government approval, a Contractor may be authorized to hire its own guards to secure Contractor-owned equipment and/or to protect Contractor employees or subcontractors. If such a relationship is permitted, the Contractor shall be exclusively liable for all guard activities to include action or inaction of Contractor's guard personnel. The Government will not offer nor provide any indemnification. Contractor shall be solely responsible for guards at all times to include any supervision, oversight, and for the development of local guard orders and/or procedures. The Contractor shall be responsible for coordinating all guard activities with the COR and shall develop and submit to the COR, for advance approval, any guard orders and/or guard procedures.

(4) Additional Security-Related Submittals

(i) Visitor List. The Contractor shall furnish to the COR, in advance, notification of visit of any Contractor-sponsored visitor to a Government-controlled facility. This notification should be in writing and must include the purpose or nature of the visit, the full name of the visitor, and the full name and phone number of the designated sponsor who will be physically responsible for escorting the visitor for the duration of the scheduled visit.

(ii) Delivery Schedule. The Contractor shall furnish to the COR, in advance, a schedule for all deliveries. This list shall include estimated delivery date, time, nature of the materials being delivered, and – where available – the name of delivery company and type of vehicle.

(iii) Explosives Security Plan. The Contractor shall furnish to the COR for approval, in advance, an explosives security plan at any work site where explosives will be stored or used.

(5) General Provisions.

(i) General. The Contractor shall comply with the Government's site security procedures as specified, and as requested subsequent to award of Contract. Failure of the Contractor to comply with required access controls, information handling procedures, or any other security controls or procedures, may result in revocation of Contractor personnel access to the work site. The Government reserves the right to modify or clarify security provisions of this contract based on changing political and civil circumstances, and perceived threats to personnel or the facility.

(ii) Security Facilities and Equipment. The Contractor shall use security facilities

and equipment only for the purposes intended and as directed by the contracting officer. The Contractor shall comply with the Government's instructions for use of secure storage areas, site enclosure and gates, temporary security lighting, building space enclosure, and lockup devices and systems established for detection, monitoring, signaling, and alarming field office facilities. Measures necessary to secure the integrity of materials, equipment, and tools installed or used in furtherance of this contract shall be at no cost to the Government.

(iii) Security Personnel Availability/Work Schedules. The Contractor shall notify the COR at least 48 hours in advance of any projected work which might impact on security or require the scheduling of extended security personnel support. The Contractor shall provide a weekly work schedule, such as anticipated delivery of materials, use of explosives or heavy machinery, and extra time needed for continuous or inherently lengthy construction or project specific operations (such as concrete placement).

(iv) Deliveries. The Contractor shall provide at least one day's advance notice of major deliveries, including time of arrival and trucks/carriers/documentation to be expected for arrival at work site. The Contractor shall provide reasonable advanced notice of deliveries which must be accommodated/accepted at times other than the Government's established working hours. Failure to provide adequate advanced notice may result in delivery delays at the Contractor's expense.

(v) Site Access. All Contractor personnel will be issued appropriate identification and must comply with all local access control procedures. The Government reserves the exclusive right to refuse or disallow any vehicular or pedestrian access to any Government-controlled facility, lands, or for any deliveries to the work site, regardless if access was scheduled or unscheduled.

(vi) Inspections and Searches. The Government reserves unqualified and unlimited right at any time to conduct security-related inspections or searches of work, material, equipment, personnel, and temporary facilities at the work site. The Contractor shall afford unrestricted access to work and allow surveillance and inspection by any Government personnel as authorized by the COR. The Government reserves the right to conduct searches of articles and personal effects of all Contractor personnel, both at point of entry and exit from the work site or Government facility. All Contractor personnel entering and leaving the work site may be required to pass through a Walk-Through-Metal-Detector device and/or other detection devices.

(vii) After Duty Hours. No Contractor personnel shall be permitted access to the work site after the Government's established working hours without prior authorization from the Government. All personnel seeking access to the site after the Government's established working hours may be required to sign in and out in a visitor's log that may be maintained by the on duty security personnel (if any).

(viii) Access Procedures at Sensitive Areas. In some instances, the Contractor may be required to erect temporary security barriers and doors to isolate a sensitive area as instructed by the Government. The Contractor may be required to install locks and thereafter control access. The Contractor shall comply with the Government's requirement for limited and escorted access to the sensitive area.

The Contractor shall notify the COR at least one day prior to each requested access to the sensitive area that is outside of the Government's established working hours.

(ix) Reported Violations. Where an indication, report, or observation of unauthorized access or performance of unauthorized work has occurred, the Government reserves the right to stop work and deny access until the circumstance and work can be investigated, inspected, tested, and resolved. The entire cost of such stoppages and resolutions shall be borne by Contractor, except when alleged violations of established security requirements, after investigation, are found not to be the fault of the Contractor.

(x) Briefings. Contractor personnel who will be assigned to this project, and who will have access to the work site, may be required to attend Government-conducted security briefings. The Government reserves the right to conduct security briefings for Contractor personnel and visitors at all levels of involvement in performance of work and maintenance of security. Required briefings may include, but are not limited to, the following: Information Security, Site Security Requirements and Procedures, Security Awareness, Delivery Methods and Inspections, Storage Requirements, Reporting Requirements, Supervisory Procedures, Contractor Employee Conduct, Visitor Control, and Threats.

(xi) Key Control. Control of keys/access codes and lock combinations is essential for the Government's project security. The Contractor shall not allow keys or access codes to be duplicated or removed from the work site, nor allow lock combinations to be divulged without specific written advanced authorization from the COR. Such loss of control, observed or suspected, may result in a requirement to change locks involved at the Contractor's expense. At the direction of the COR, the Contractor shall provide duplicate keys and lock combinations to Government security personnel when requested for the purpose of security inspections and emergency actions, including keys, combinations, and access codes needed for unrestricted access to every area and element of the project. The Contractor may be required to establish a key control program that is acceptable to the Government for Government-issued keys and for heavy machinery parked at the construction site (if this is a construction contract).

(xii) Vehicle Control. In general, parking of vehicles on the work site shall not be permitted, except for tractors, cranes, and similar equipment used directly in performance of work, for delivery of materials/supplies, and for removal of waste and surplus material. The Government may designate an approved contractor employee parking area. Upon entering the work site, vehicles and drivers may be subject to search and inspection. The Contractor shall obtain authorization from the COR to park the Contractor's official vehicles and motorized vehicular construction equipment that are required/desired to be parked on the work site. Vehicles in violation may be towed off the work site at the Contractor's expense. Where Government-designated employee parking is not available, parking of construction employees' automobiles and similar transportation vehicles may be excluded from the work site. It is the Contractor's responsibility to arrange for suitable accommodation for these vehicles.

(xiii) Prohibited/Restricted Items. Prohibited/restricted items and activities on the work site include but are not limited to the following: firearms and other weapons, except as specifically authorized by the COR in compliance with state and Federal laws and regulations; drugs, including narcotics, barbiturates, marijuana, alcoholic beverages, and similar substances, except for use with valid medical prescription; and explosives.

(xiv) Exceptions for Explosives. When needed for use in specifically limited amounts and controlled circumstances for construction work, explosives may be brought onsite with written prior authorization from the COR. As a hazardous material, the Contractor shall treat the use of explosives in accordance with regulations and guidance provided by Federal, State, and local authorities. The storage of explosives shall be in accordance with requirements of the Bureau of Alcohol, Tobacco, and Firearms or the State in which they are stored. If onsite storage of explosives is necessary, explosives shall be stored at a pre-designated, secure site approved by the COR. Prior to Government approval of storage, the Contractor shall develop and submit to the COR a complete storage/security/retrieval plan for approval. The storage/security plan can be included in a "Blasting Safety Plan." The plan shall make accommodations for surveillance, detection, and response. Explosives firing systems shall be stored off-site and under no circumstances shall be stored together with explosives.

(xv) Photography. The use of photographic equipment and taking of photographs shall only be allowed as authorized by the COR.

(f) Reserved

M - Evaluation Factors for Award

M.1 WBR 1452.215-82 Evaluation Factors For Award -- Quality Predominance -- Bureau Of Reclamation (Mar 2021)

(a) Award will be made to the responsible offeror submitting a proposal which conforms to the solicitation and is most advantageous to the Government considering the factors and any significant subfactors listed in this provision.

(b) In the evaluation of proposals, all evaluation factors (listed in this provision) other than cost or price, when combined, are considered to be significantly more important than cost or price. The relative importance to be placed on the factors in relation to each other is contained in paragraph (e) of this provision. However, the degree of importance of cost or price may increase with the degree of non-cost or non-price equality between the proposals. If a proposal is determined by the contracting officer to be "technically unacceptable" as a result of evaluating all factors other than cost or price, the proposal may be rejected from further consideration. The contracting officer reserves the right to make award to other than the technically acceptable offeror with the lowest cost or price proposal if it is determined that the technical benefits of another offeror's proposal justify its higher cost or price. The contracting officer also reserves the right to make award to a lower-priced, lower-scored offeror if it is determined that the cost or price premium involved in awarding to a higher-rated, higher-priced offeror is not justified.

Since technical proposals are being solicited to obtain information to be used in the evaluation, the Government reserves the right to use information outside of the proposal to evaluate the capability of offerors and the value of offers.

(c) Pursuant to FAR 15.305(a)(1), a cost or price analysis will be performed to determine price reasonableness and any instances of unbalanced pricing, using one or more of the techniques at FAR 15.404-1.

(d) The following factors and significant subfactors (if listed), will be considered in evaluating proposals and making the source selection:

> **Factor 1** – Technical Capability: The Government will evaluate the Offeror's demonstrated ability to provide and install a new UPS system in accordance with the technical specifications, including demolition of the existing UPS, the temporary power plan, installation of the replacement UPS, commissioning, and compliance with all required electrical, environmental, and performance characteristics, while also considering the relevance and quality of the Offeror's experience performing similar work. The evaluation will further assess whether the Offeror demonstrates at least two successful projects within the last three years that are comparable in size, scope, and technical complexity, and determine whether the proposed UPS equipment meets or exceeds all technical requirements outlined in the solicitation.
>
> Preference will be given to offerors whose technical capabilities and example projects most closely relate to the specifications of this solicitation. If the proposal exceeds technical requirements as outlined in the solicitation, an evaluation of the benefits of those qualities will be performed to determine if preference will be given for an offer that goes above and beyond meeting the requirements. Offers that propose different, new or added processes that increase the likelihood of minimizing or eliminating interruption or

outages of power service may be evaluated more favorably. Offeror's proposals that demonstrate strong understanding of the tasks, will be viewed more favorably.

Factor 2 – Schedule: The Government will evaluate the clarity, logic, and realism of the proposed project schedule, including the sequencing of demolition, installation, testing, and commissioning, as well as the Offeror's approach to minimizing downtime of pwer service to the faclity. The evaluation will further assess whether the proposed schedule is clear, complete, and logically sequenced; whether downtime is appropriately identified, reasonable, and minimized; and whether the Offeror demonstrates a sound, effective strategy for schedule recovery and mitigation of delays.

Preference will be given to proposed schedules that provide a clear, complete schedule that is logically sequenced, demonstrating the offeror's understanding of the complexity of the specifications.

Factor 3– Past Performance: The Government will review relevant reports contained within the Contractor Performance Assessment Reporting System (CPARS), and any other applicable past performance information submitted by the Offeror. The Government may also use past performance information for all parties obtained from other than the sources identified by the offeror. Evaluating past performance and experience may include information provided by the firm, customer inquiries, Government databases, and other publicly available sources. Failure to provide requested data, accessible points of contact, or valid phone numbers could result in a firm being considered less qualified. Evaluation will include Offeror's ability to successfully perform the required work, considering how well the Offeror has executed past projects of similar scope, complexity, and magnitude.

Past performance information will be utilized to determine the quality of the Offeror's past performance, as it relates to the probability of success for the required effort. A lack of recent and relevant past performance will be evaluated as neutral. However, the proposal of the offeror with no relevant past performance history, while rated neutral in past performance may not represent the most advantageous offer to the government.

Factor 4 – Cost/Price: The Government will evaluate proposed pricing for completeness, reasonableness, and overall value, ensuring that all prices reflect the technical approach, required equipment, warranty provisions, and the full scope of work identified in the solicitation. Price proposals will be assessed against the Government's independent cost estimate, as well as compared to other price proposals received, with the Government estimate serving as a benchmark for determining price realism and identifying variances that may require further analysis. The Government may make an award only if the Offeror's price is determined to be fair and reasonable, and all proposed prices will also be evaluated for reasonableness and for any indications of unbalanced pricing.
Special emphasis on item #2 on the Price Schedule in section B – 'Electrical Drawings and Data'. Part of the final deliverables are updates to the drawing (01 33 26). Proposals with particularly low, unbalanced pricing on this aspect will be closely scrutinized.

(e) The relative importance of the factors listed in paragraph (d) of this provision is as follows:

Award will be made to that offeror whose proposal is the most advantageous to the Government and demonstrates that (1) it meets the technical, schedule and past performance requirements of the solicitation and (2) the proposal's technical/cost relationship represents the best value to the Government. The relative importance of each factor is ranked from highest importance to lowest as follows:

1)Technical Capability
2)Schedule
3)Past Performance
4)Cost/Price

Evaluation factors other than cost or price, when combined, are SIGNIFICANTLY MORE IMPORTANT THAN cost or price in the award decision. The critical factor in making any cost/technical tradeoff is not the spread between the technical scores but, rather, the significance of that difference. The significance of the spread of scores will be determined on the basis of what the difference might mean in terms of performance and what it would cost the Government to take advantage of it. Award may not necessarily be made for technical capabilities that would appear to exceed those needed for the successful performance of the work. The Government reserves the right to make cost/technical tradeoffs that are in the best interest and advantageous to the Government. The Government may reject any or all offers if such action is determined to be in the best interest of the Government.

M.2 WBR 1452.215-86 Intent to Incorporate Technical Proposal -- Bureau of Reclamation

(Mar 2021)

All or part of the successful offeror's final technical proposal may be incorporated, physically or by reference, in any contract resulting from this solicitation. Nothing contained in the successful offeror's technical proposal shall constitute a waiver to any other requirement of the contract. In the event of any conflict between the successful offeror's technical proposal and any other requirement of the contract, the conflict shall be resolved in accordance with the Order of Precedence clause.

The successful offeror may be asked to provide an updated technical proposal after negotiations for incorporation into the awarded contract. If after contract award, it is discovered that changes made during negotiations were not incorporated in the work requirements and/or technical proposal, such changes to the Contractor's documents shall be considered administrative in nature and shall be made by unilateral modification to the contract, at no change in contract cost or price or other terms and conditions.

M.3 WBR 1452.215-87 Incorporation of Technical Proposal—Bureau of Reclamation

(MAR 2021)

All or parts of the successful offeror's technical proposal are hereby incorporated, either physically or by reference, into this contract. The portions and their location in the contract are as

follows:

Description	Location in Contract

**Contracting Officer shall complete the chart at time of contract award*