Statement of Work (SOW) – Cremone Bolt Design, Fabrication, and Installation for Casemate Enclosure Doors
Fort Pulaski National Monument

Background
Fort Pulaski National Monument (FOPU) was established by Presidential Proclamation No. 1713 on October 15, 1924, and was later transferred to the Department of the Interior as part of the National Park system in 1933. The National Monument, which sits between Savannah and Tybee Island on the Georgia coast, preserves and interprets the 19th century masonry fort and associated landscape that illustrate the evolution of civil engineering and military technology.

Constructed from 1829-1847, Fort Pulaski is one of the best preserved Third System masonry fortifications in the United States and is the monument's primary resource and visitor destination.

Required Services
The Contractor shall provide all labor, supervision, tools, equipment, transportation, materials, procurement, modification, adaptation, fabrication, technical expertise, documentation, and incidentals necessary to provide seven (7) complete cremone bolt hardware assemblies for casemate enclosure doors at Fort Pulaski National Monument. Commercially available historic hardware systems modified to meet project requirements are acceptable and encouraged where appropriate.

The work includes, but is not limited to:
- Field verification and measurement of existing conditions
- Hardware design or modification development
- Production of measured drawings and specifications
- Fabrication and finishing of hardware assemblies
- Prototype fabrication and review
- Delivery of completed assemblies
- Installation support and technical assistance
- Preparation of maintenance documentation
- Warranty support
- Delivery of any die casting plates developed under this contract

The Contractor shall ensure all fabricated hardware is compatible with the historic character and operational requirements of Fort Pulaski National Monument.

Location of Work.
Fort Pulaski National Monument – Inside Fort Pulaski
Delivery Address – 50 Cockspur Island Road, Savannah GA 31410

Pre-Bid Site Survey
An optional pre-bid site visit shall be performed with the Contracting Officer's Representative (COR) or authorized park representative present. Contractors shall have the opportunity to field verify existing conditions, dimensions, access limitations, and installation constraints prior to submission of

bids. Drawings, photographs, and sketches provided by the Government are supplemental only and shall not substitute for field verification. See section 16 for complete list of attachments.

Failure to perform field verification shall not constitute grounds for additional compensation.

Period of Performance
All work shall be completed within 180 calendar days after issuance of the Notice to Proceed (NTP). The anticipated schedule shall include, at a minimum:

- Kickoff meeting
- Site measurements and verification
- Field Verification Summary
- Initial design proposal
- 85% design submittal
- 100% design submittal
- Prototype fabrication and delivery
- Prototype review and modifications
- Final fabrication and assembly
- Final delivery
- Installation assistance
- Final documentation and closeout

1. General Requirements

- All work sites shall be left clean and orderly at the end of each workday.
- No materials or equipment shall be left unsecured onsite.
- The Government assumes no liability for stolen or damaged contractor property.
- Contractor shall be responsible for cleanup, removal, and lawful disposal of all debris generated by the work.
- Site closures shall be implemented whenever work is being performed or the site is unattended. Closures shall utilize appropriate barriers, signage, cones, fencing, or stanchions.
- Contractor shall exercise extreme care around all historic structures, finishes, and landscapes.
- Any accidental damage shall be immediately reported to the COR for documentation and resolution.
- Contractor shall restore any damaged site features to pre-project conditions at no additional cost to the Government.
- No ground disturbance is permitted without written approval from the Contracting Officer (CO).
- Smoking is prohibited within 50 feet of historic structures or within the Fort.
- Noise shall be minimized to reduce impacts on visitors and park operations.
- Contractor personnel shall conduct themselves professionally and courteously at all times.

2. Project Specific Requirements

2.1 Field Verification

- The Contractor shall be responsible for verifying all dimensions, setbacks, hardware locations, threshold openings, and installation conditions.
- A Field Verification Summary shall be submitted for review and approval prior to fabrication activities.
- The Contractor shall acknowledge that the structure is approximately 200 years old and dimensional variations between openings are expected.

2.2 Hardware Design and Engineering
The Contractor shall provide, adapt, modify, fabricate as necessary, finish, and install-support seven (7) cremone bolt hardware assemblies suitable for the casemate enclosure doors. Commercially available historic or reproduction hardware systems may be utilized as the basis for the assemblies, provided they are modified as necessary to meet the functional, dimensional, accessibility, durability, and historic character requirements of this contract.

Hardware shall:

- Be fabricated from C95400 aluminum-bronze or approved equivalent alloy.
- Provide maximum corrosion resistance for coastal exposure
- Be historically sympathetic in appearance to hardware fabricated in the era of the fort's construction (1829 – 1847) and should feature a finish with a subtle luster
- Be able to withstand heavy daily use, wind, and salt-air exposure with minimal maintenance
- Provide secure top and bottom engagement
- Avoid visible closure hardware on exterior door faces
- Be modular and field-adjustable to accommodate varying openings
- Minimize modifications to existing doors and framing
- Incorporate ferrules and strike plates where required
- Accommodate ICC Building Code and ABA accessibility requirements and Universal Design principles to the greatest extent feasible

Additional requirements:
- No modifications to historic granite thresholds are permitted
- The opening for the handle access should be positioned underneath the hasp along the front of the door to hide it when not in use for concealed or minimally visible access.
- A surface mounted system on the back of the door with removable handle access from the front is desired.

The Contractor shall provide all necessary engineering, detailing, fabrication drawings, templates, and specifications required for fabrication and installation.

2.3 Prototype Fabrication
- The Contractor shall provide and install one prototype or modified sample assembly for Government review and acceptance prior to fabrication of the remaining assemblies.
- If deficiencies are identified, revisions shall be incorporated and resubmitted for approval prior to continuation of fabrication.

- Modifications or adjustments to the prototype assembly may be required prior to final production

2.4 Final Fabrication and Delivery
Upon prototype approval, the Contractor shall finish, assemble, and deliver the remaining hardware assemblies. All assemblies shall include:

- Fasteners
- Installation templates
- Specialty tools
- Installation instructions
- Adjustment instructions
- Associated strike plates and ferrules

Delivery shall occur during Government business hours and shall be coordinated with park staff a minimum of five (5) business days in advance.

2.5 Installation Assistance and Closeout

- The contractor shall provide onsite technical assistance during installation of the hardware assemblies.
- Verification of final as-build conditions shall be done with COR and contractor

3. Additional Requirements

3.1 Required Personnel
The Contractor shall provide professionally qualified personnel including, at minimum, a hardware designer or hardware engineer possessing at least five (5) years of specialized experience in custom hardware design and fabrication.

3.2 Quality Control

The Contractor shall develop and maintain a Quality Control Plan (QCP) addressing:

- Surveillance methodology
- Response procedures
- Coordination procedures
- Progress meetings
- Correction of deficiencies
- Fabrication or modification tolerances and mitigation procedures

3.3 Warranty
The Contractor shall provide a minimum three-year warranty covering repair or replacement of defective hardware, materials, or workmanship.

3.4 Design Submittals
The Contractor shall submit the following design phases for Government review and approval:

- Initial design concept
- 85% design submittal

- 100% design submittal

Fabrication shall not proceed until written approval is received from the CO and COR.

4. Contractor Proposal Package

Offerors shall submit a complete proposal demonstrating their technical understanding, qualifications, and ability to successfully perform the work described in this Statement of Work. At a minimum, the proposal package shall include:

- A bid schedule and Schedule of Values identifying costs associated with each major task or phase of work.
- A technical proposal describing the contractor's approach to completing the required services, including:
    - Roles and responsibilities of personnel, subcontractors, and project team members
    - Preliminary schedule
    - Staff qualifications and relevant experience
    - Approach to field verification, design development, delivery, documentation, and installation support. Offerors may propose adaptation or modification of commercially available historic hardware systems where appropriate.
- Approach to quality control
- Proof of current business liability and workers compensation insurance.
- Warranty information.
- Examples of comparable prior work, including:
    - Samples or photographs of fabricated and installed hardware
    - Sample shop drawings or final drawings
    - Sample maintenance plans

Offerors are encouraged to provide detailed technical information, industry best practices, and proposed process improvements relevant to the project requirements.

5. Deliverables

- Pre-Project
    - Project schedule
    - Technical approach
    - Complete Quality Control Plan
    - Casting Tolerance and Quality Assurance Plan
    - Proof of insurance
    - Key personnel list
    - Field verification summary
- Design Deliverables (should be provided in either an 11x17 or a 22x34 format)
    - Initial design proposal
    - 85% design proposal
    - 100% design proposal
    - Measured drawings
    - Specifications
    - Hardware schedule including location, numbers of each piece to be produced, and part numbers for reordering
    - Installation instructions
    - Maintenance Plan

- Fabrication and Modification Deliverables
    - Identification of products and materials used
    - Installation templates or modification and patterns, as applicable
    - Finish samples
    - One full-scale prototype (prior to fabrication of full order)
    - Seven complete hardware assemblies
    - Specialty tools and hardware needed for installation
- Closeout Deliverables
    - Final approved drawings
    - Warranty information
    - Final maintenance documentation

All submittals shall utilize NPS Transmittal Form CM-16.

In the absence of other agreements negotiated with respect to time provided for government review, deliverables will be inspected and the Contractor notified of the COR or other authorized management representative findings within 30 business days of normally scheduled review. If the deliverables are not acceptable, the COR or other authorized management representative will notify Contractor immediately.

6. Government Furnished Staff, Property, Materials & Supplies
None.

7. Hours of Operation and Workforce

- Onsite work shall occur during normal business hours of 7:30 AM to 4:30 PM, Monday through Friday, excluding Federal holidays. Contractor shall coordinate onsite activities with the CO and COR at least ten (10) business days prior to mobilization.
- Deliveries must be scheduled Monday through Friday between 7:00 AM and 2:00 PM and must be coordinated with park staff five (5) working days prior to arrival. Contractor will be responsible for all shipping and receiving to the project site, and all associated costs.
- The Park reserves the right to close the site due to local or national emergencies, administrative closings, or similar Government directed facility closings. Contractors must comply with such closures. The contractor will not be reimbursed when the government facility is closed for the above reasons.
- The Contractor must always maintain an adequate workforce for the uninterrupted performance of all tasks defined within this contract.

8. Site Access and Use

- The NPS issues access to government property as needed.
- The Contractor shall initiate and coordinate all necessary access approvals no later than 10 days before the project's start date.
- Contractor personnel shall comply with all park access, traffic, parking, and security requirements.

- Contractor employees operating motor vehicles shall possess a valid driver's license. Driver and vehicle permits, licenses, registrations and proof of insurance shall be maintained in the vehicle at all times and made available upon request.
- Contractor employees shall comply with federal vehicle motor law requiring seat belts be worn at all times. Contractor employees shall adhere to the posted speed limits.
- Access and use of NPS sites and property is limited to scheduled execution of contract work only. Misuse of site access can result in removal from the site, revocation of access, or termination for cause.

9. Performance Management
The Contractor shall maintain sufficient staffing and supervision necessary for uninterrupted performance of all contract requirements. The Contractor shall immediately notify the COR of any issues impacting schedule, quality, safety, fabrication, or installation.

10. Contracting Officer's Representative or Authorized Park Management Representative
Kathrine D. Purcell
Exhibit Specialist
Fort Pulaski National Monument

11. Onsite Project Manager
Kathrine D. Purcell
Exhibit Specialist
Fort Pulaski National Monument

12. Safety & Environmental Compliance
- The Contractor shall comply with pertinent provisions of all applicable federal, state, and local safety and environmental regulations.
- The COR or authorized management representative has the authority to issue restraint or cease-and-desist orders to the Contractor when violations or unsafe acts are present and threaten Government and Contractor employees or damage Government property.
- The Contractor shall immediately stop work and report officer all accidents resulting in employee injury or death or damage to property while performing this contract to the COR or other authorized management representative of all accidents resulting in employee injury or death or damage to property while performing this contract.

13. Applicable Standards and Regulations
The Contractor shall comply with:
- ICC Building Codes and ABA Accessibility Standards, with adherence to the strictest standard
- Universal Design Principles
- Applicable building and fabrication codes
- OSHA standards
- NPS CAD/BIM Drafting Standards
- Applicable engineering and manufacturing standards referenced in the contract documents

14. Insurance
The Contractor shall maintain all required insurance including:

- Business Liability Insurance
- Workers' Compensation Insurance

Current proof of insurance shall be submitted with the proposal and maintained throughout the contract period.

15. Invoices
Invoices shall clearly identify:

- Work completed
- Deliverables submitted
- Applicable milestones
- Contract references
- Schedule of values breakdown

Improper or incomplete invoices may be returned for correction.

16. Attachments
Attachment A: Maps of Cockspur Island and Fort Pulaski
Attachment B: Photos and Drawings of Doors and the Granite Threshold
Attachment C: Approximate Door & Framing Measurements
Attachment D: Sketches - Hardware Ideas (*Sketches are conceptual only and are not intended to require fully custom hardware fabrication.)
Attachment E: Transmittal Form CM16
Attachment F: Submittal Transmission, Review and Approval Procedures
Attachment G: Onsite Protocols

Attachment A

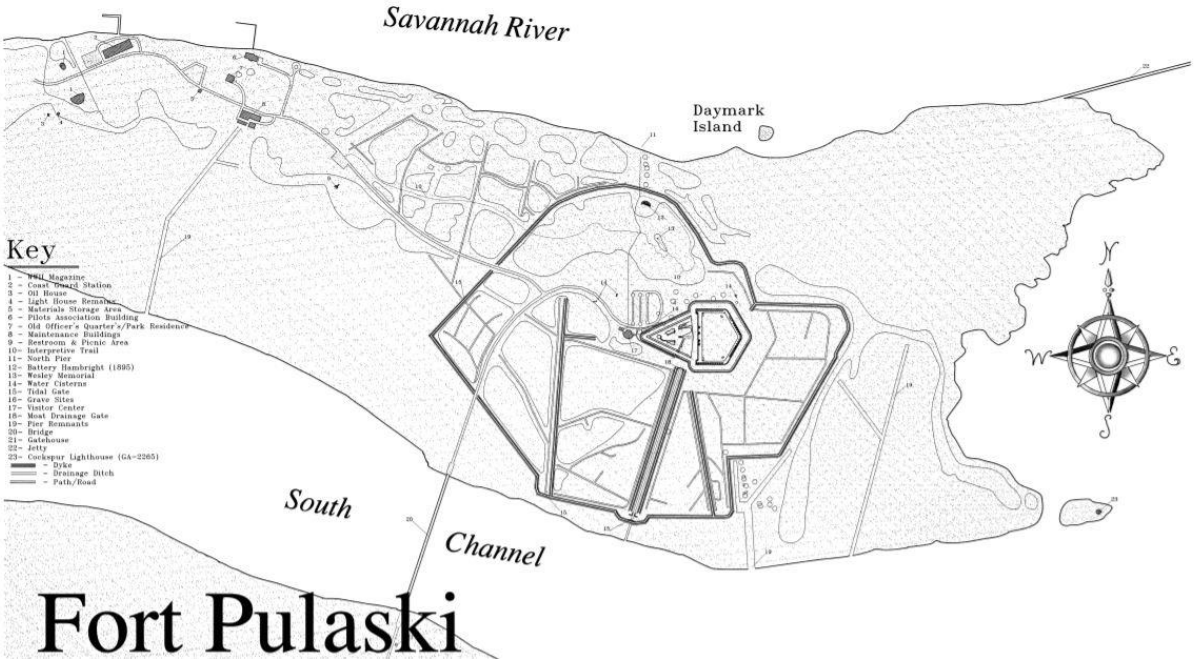

Map of Cockspur Island

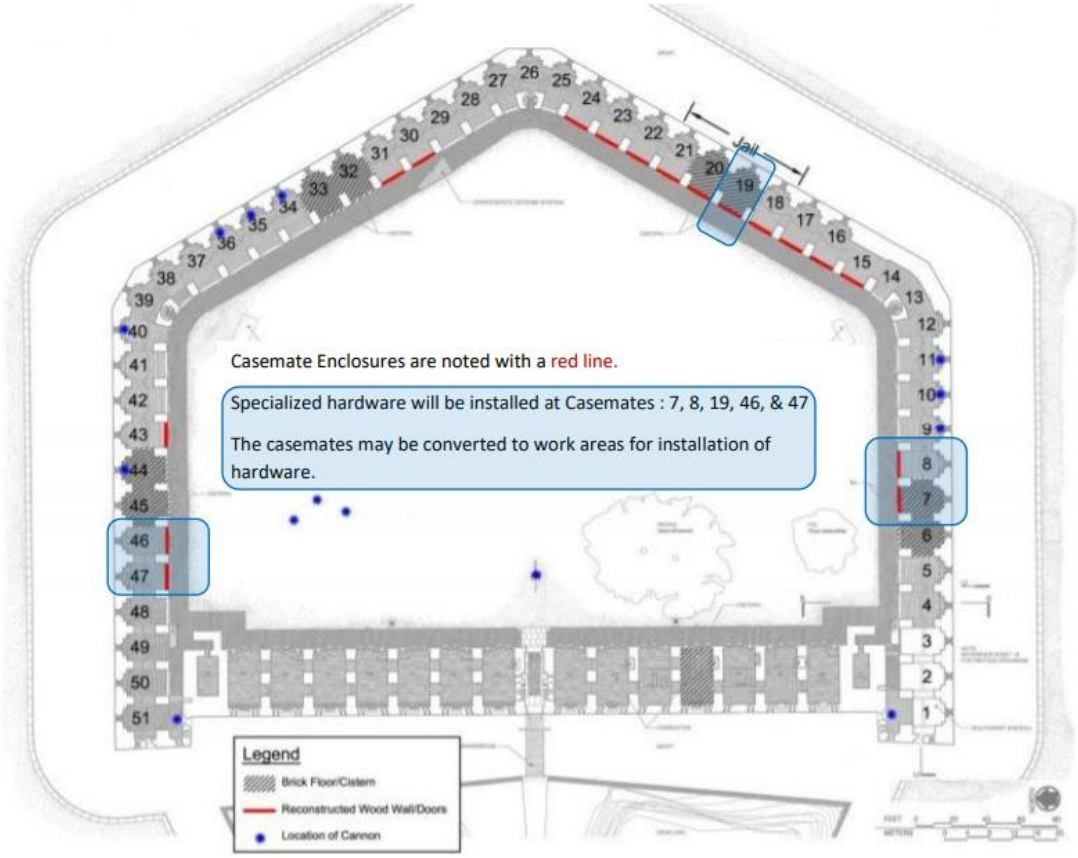

Map of Fort Pulaski's Lower Level – Locations of Casemates Requiring Hardware

Attachment B

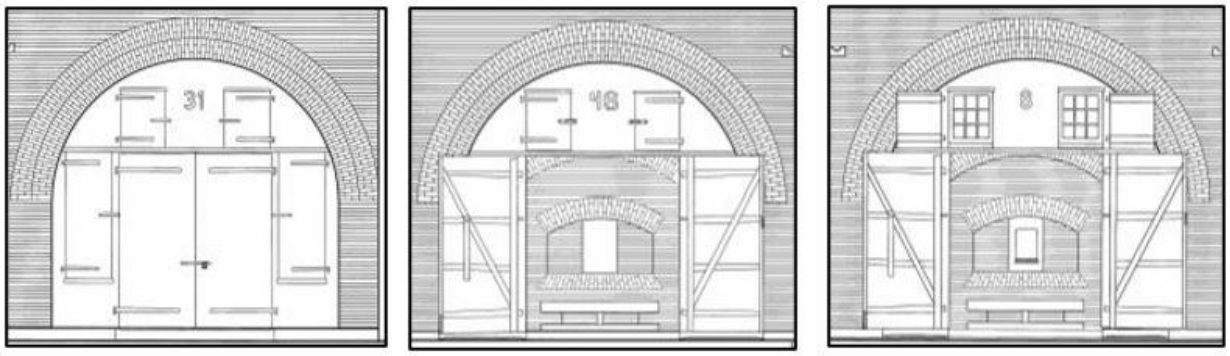

Photos and Drawings of Casemate Enclosures

Granite Threshold – Note hole for bolt

Photo of Casemate Door (Back/Interior)

Attachment C

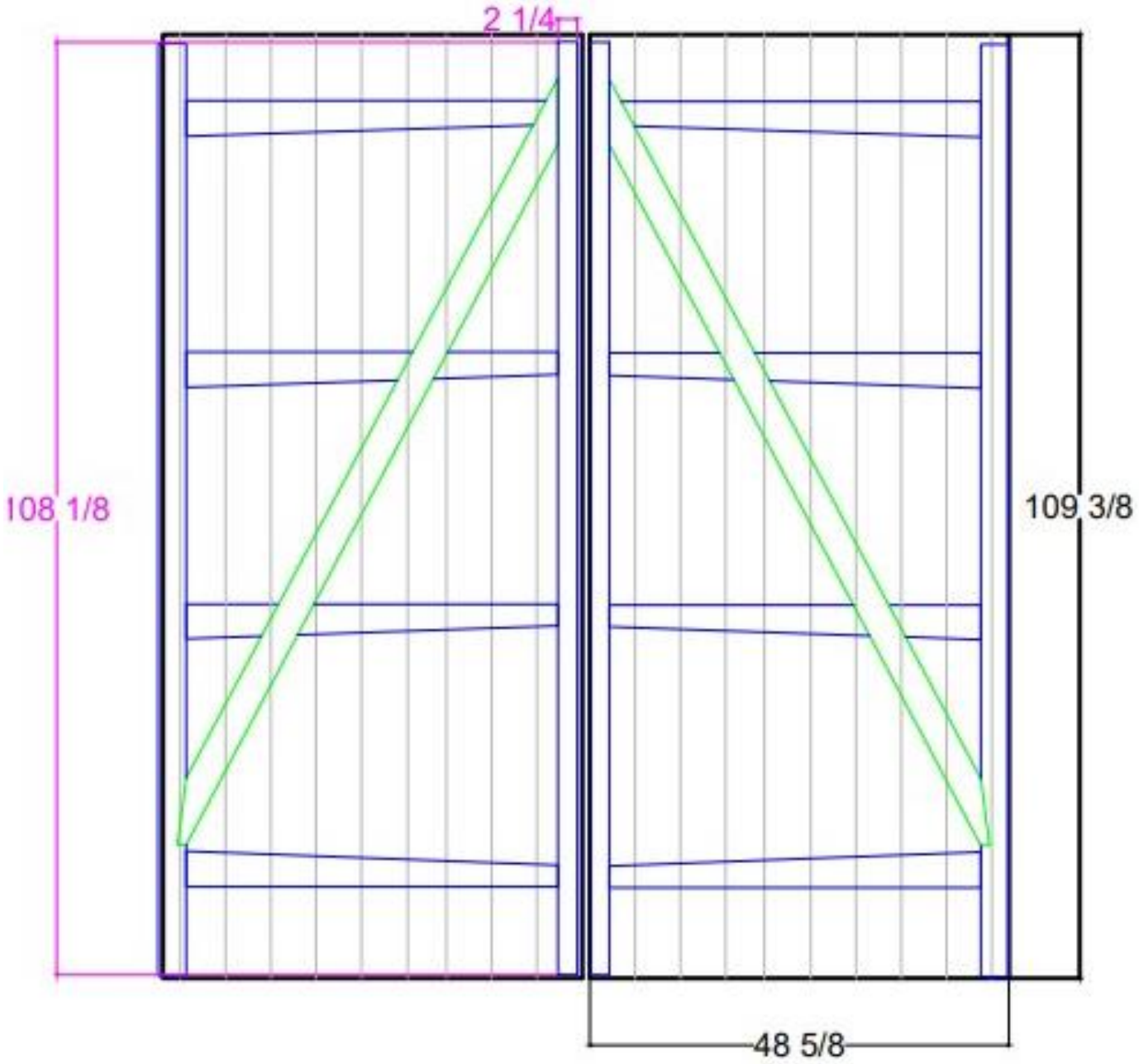

Approximate Overall Door Dimensions

Attachment D

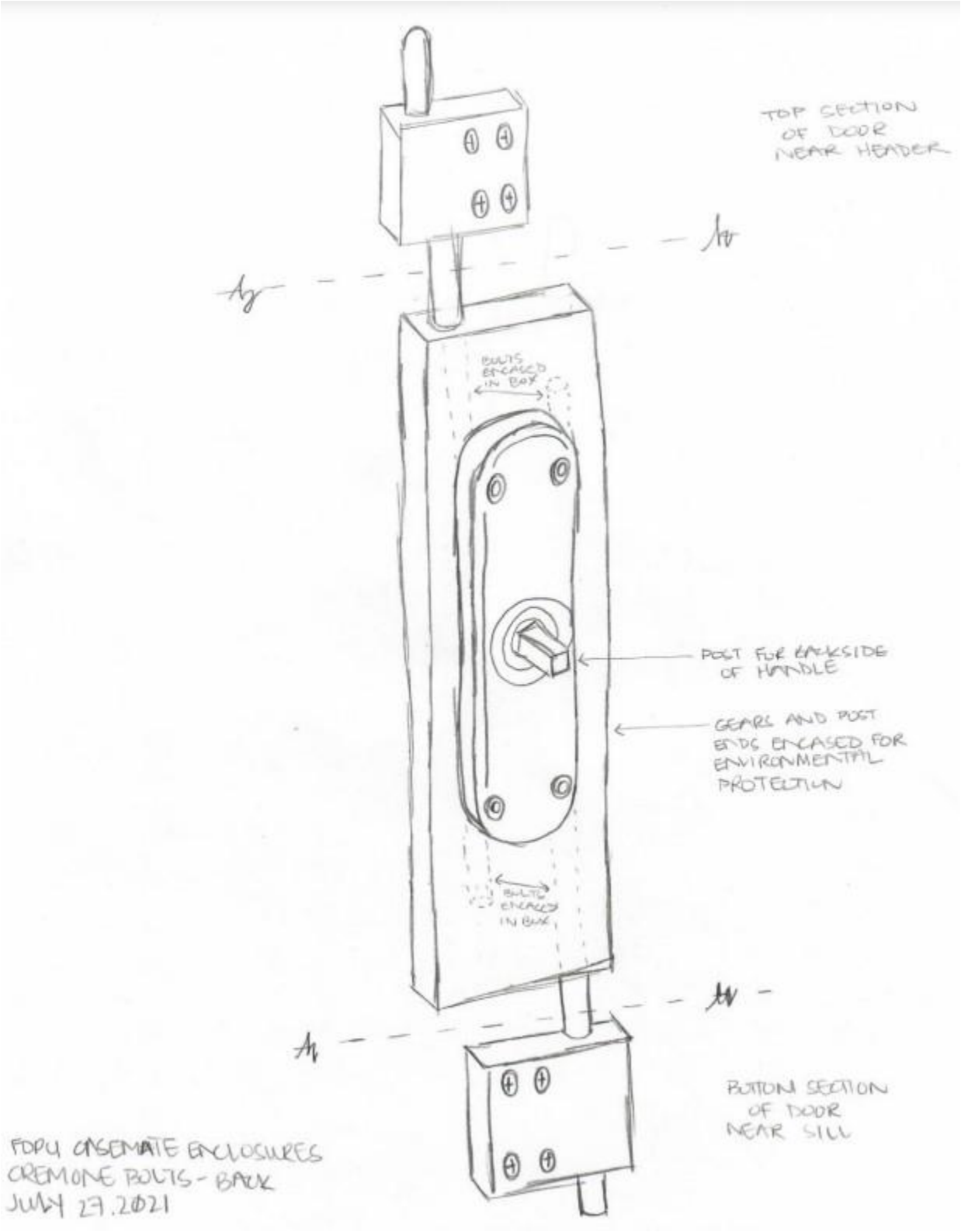

Idea Sketch 1

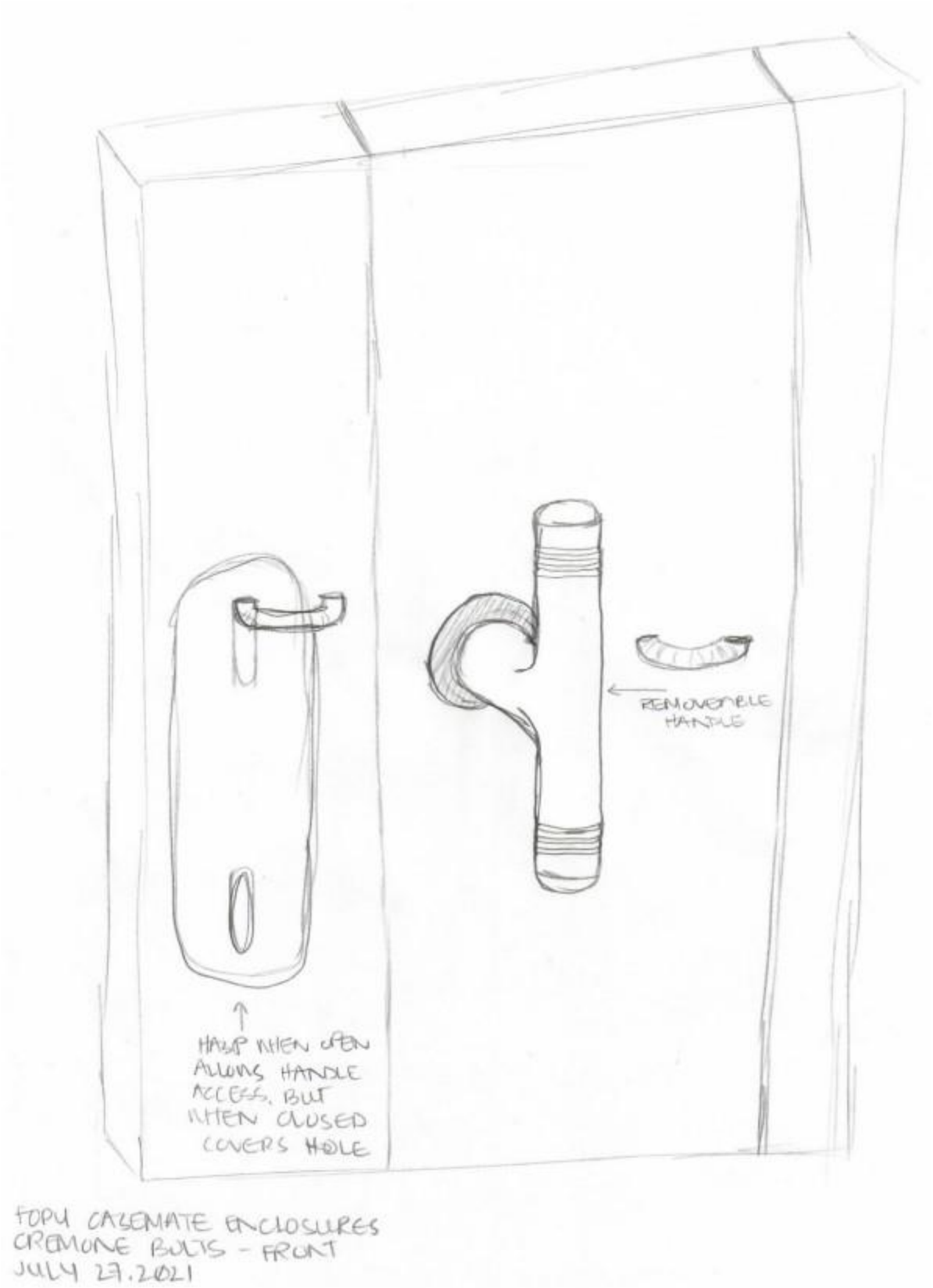

Idea Sketch 2

Attachment E

Transmittal Form (CM-16)

National Park Service (NPS) - Denver Service Center (DSC) | 10-7-20

ACRONYMS: A/E: Architect/Engineer; CMR: Construction Management Representative; FAR: Federal Acquisition Regulation; LEED: Leadership in Energy & Environmental Design; N/A: Not Applicable; PMIS: Project Management Information System

Submittal Number: PARK Acronym: PMIS Number: Project: Contract Number: Date: Sheet: 1 of 2

Transmittal Number:

Construction Contractor: Subcontractor / Supplier:

Action Submittal	Informational Submittal	Item Number	Specification Section Number	Paragraph Number	Description of Item (Size, Type, Name, Manufacturer, Use, etc.)	Alternate Materials Proposed	A/E ACTION Action Submittal: Approved	A/E ACTION Action Submittal: Approved with Notations	A/E ACTION Action Submittal: Disapproved - Resubmit	NPS ACTION Action Submittal: Approved	NPS ACTION Action Submittal: Approved with Notations	NPS ACTION Action Submittal: Disapproved - Resubmit	NPS ACTION Informational Submittal: Accept	NPS ACTION Informational Submittal: Reject

Construction Contractor - Name, Title, & Signature: Date:

I hereby certify this submittal has been reviewed for accuracy, completeness, and compliance with contract requirements. FAR 52-236-21

CMR - Name, Title, & Signature: Date:

A/E - Name, Title, & Signature: Date:

Review Comments - Name: Comment(s):

Recommended By - NPS COR or Alternate COR - Name, Title, & Signature: Date:

Action By - NPS Name, Title, & Signature: Date:

Approval of this submittal is subject to the provisions of the contract drawings and specifications.
This action is for general concurrence only and the Government is not responsible for errors or omissions.

Date Received: Date to Construction Contractor:

Distribute 1 copy each: CMR Interim, A/E, DSC, & Construction Contractor.

NPS Review Comments - Name: Comment(s):

Attachment F

Submittal Transmission, Review and Approval Procedures

All submittals shall be transmitted using National Park Service *Transmittal Form CM-16*.

Forward submittals to Contracting Officer at least 30 days before need for approval.

All submittals are subject to review and acceptance.

Contracting Officer reserves the right to require submittals in addition to those called for in individual sections.

All submittals should be clearly organized, labeled, and include all information relevant to their purpose.

Submittals that are illegible, incomprehensible, not clearly or logically arranged, that do not provide the required or sufficient information, or that are not in an accepted file format will not be approved and are subject to revision and resubmittal.

Submittals should also feature the date and, when applicable, the date of revisions.

Coordinate all submittals and review them for legibility, accuracy, completeness, and compliance with contract requirements. Forward submittals that are related to or affect one another as a package to facilitate coordinated review. Each transmittal shall contain only data specific to that individual submittal.

Submittal Identification

- Identification information shall be applied to the bottom right margin on each page of documents.
- Identification information on samples shall be applied to the most readily visible area on the sample or on tags attached to sample.

Submittal Numbering

- Number each submittal consecutively.
- For re-submittals use the original submittal number, plus a letter suffix beginning with A.
- Additional re-submittals of the same item shall contain the original number with the next consecutive letter.

Contracting Officer's Review:

- Submittals will be returned disapproved without technical review if identification information is missing, an incorrect number or format of submittals is provided; the transmittal form is missing or submittals do not show evidence of Contractor's approval.
- Any work done or orders for materials or services placed before approval shall be at the Contractor's own risk.

- After reviewing submittals, the Contracting Officer will return one copy of form *Transmittal Form CM-16* and one copy of applicable (marked up) submittal sheets to the Contractor. Shop drawing review notations will be returned on the reproducible original shop drawing. All other submitted items will be retained. The Contractor is responsible for producing additional copies for his/her own use.

  The returned submittal will be marked in one of three ways as defined below:

  - APPROVED: Acceptable with no corrections.
  - APPROVED WITH NOTATIONS: Minor corrections or clarifications required. All comments are clear and no further review is required. The Contractor shall address all review comments when proceeding with the work.
  - DISAPPROVED - RESUBMIT: Rejected as not in accordance with the contract or as requiring major corrections or clarifications. The Contracting Officer will identify the reasons for disapproval. The Contractor shall revise and resubmit with changes clearly identified.

Attachment G

General On-site Protocols

All landscapes, historic structures, and adjacent areas are to be protected from damage while work is being executed on site. Contractor will ensure no damage is sustained to landscapes, sites, or park structures occurs during the execution of the project.

Contractor is to alert the Contracting Officer and COR of any accidental damage immediately so that it can be documented and handled according to proper Park procedure.

Contractor will be held responsible for all restoration of the site, both landscape and building, if damaged while work is performed. The restoration must bring the worksite to the appearance and condition that existed prior to the work being performed.

The contractor is responsible for cleanup, removal, and disposal of any debris associated with work.

Site to be left clean and orderly at the end of each day. No materials are to be left onsite that are not easily secured. The government assumes no liability for any equipment, supplies, or material that is stolen, missing, or damaged over the course of the contract period of performance.

The work site is to be closed to all visitor and vehicle traffic while work is being performed as well as while the site is left unattended. This is at the beginning of the workday, at the end of the workday, and whenever workers are not on site. This is to be done with signage and appropriate, neatly placed closures such as stanchions, construction fencing, cones, or other sturdy and highly visible materials.

No ground disturbance is permitted without prior approval in writing from the CO.

Smoking is not permitted within 50 feet of a historic structure or within the Fort, including the terreplein and parade ground.

Noise should be kept to a minimum as it may negatively impact the soundscape.

Visitors and staff should be treated with courtesy and respect.

Vulgar material or aggressive behavior is not permitted and will not be tolerated.