GLEN CANYON NATIONAL RECREATION AREA

IDENTIFICATION OF LOCATIONS FOR LAUNCH RAMPS IN LAKE POWELL

BULLFROG LAUNCH RAMP

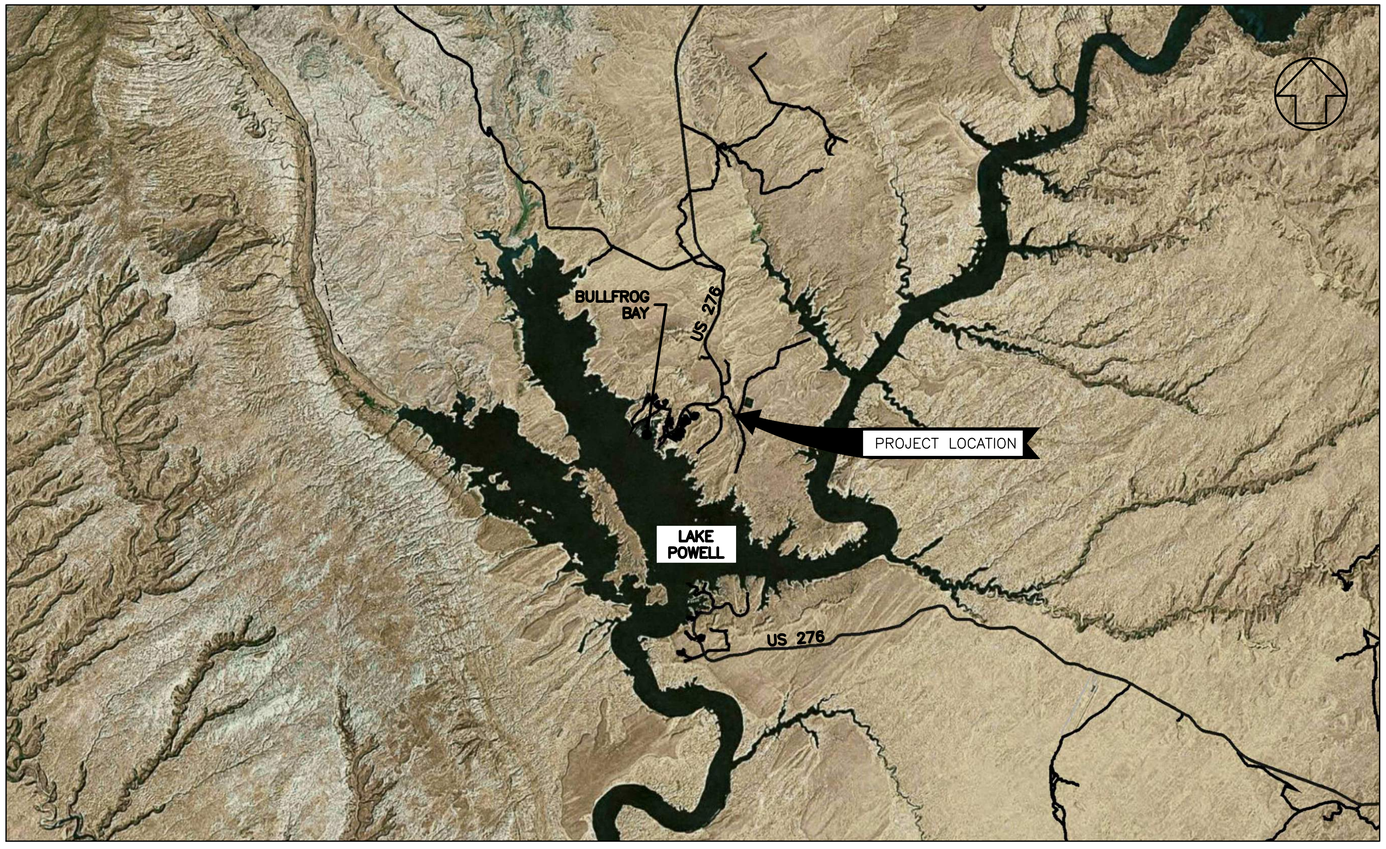

INDEX

SHEET	SUB SHEET	TITLE OF SHEET
1		COVER SHEET
2	G1	OVERALL PROJECT SITE PLAN
3	G2	SURVEY CONTROL
4–5	G3–G4	UTILITY SURVEY
6	G5	GEOMETRIC LAYOUT
7	G6	GENERAL ABBREVIATIONS AND LEGEND
8	G7	APE BOUNDARY
9	G8	BLANK
10	G9	KEY PLAN
11	C1	STANTON CREEK ROAD TYPICAL SECTION
12–26	C2–C16	STANTON CREEK ROAD PLAN AND PROFILE
27	C17	PARKING AREA PLAN
28	S1	LAUNCH RAMP PLAN
29	S2	LAUNCH RAMP PROFILE
30	S3	LAUNCH RAMP LAYOUT AND SECTION
31–32	S4–S5	LAUNCH RAMP DETAILS
33	U1	UTILITY ROADWAY SECTION
34–41	U2–U9	STANTON CREEK ROAD UTILITY PLAN
42	U10	NRA SR 276K WATER LINE LAYOUT
43–44	U11–U12	FORCE MAIN AND WATER LINE DETAILS
45	U13	ELECTRICAL DETAILS

PMIS NO.: 318882

Mark	Sheet	REVISION	Date	Initial

QUALITY DESIGN CERTIFICATION

☐ Prepared in Accordance with Design Development (Title I) _____ Drawing No.
OR
☐ Variance from Design Development (Title I) Approved by Superintendent on _____ Date
OR
☐ Construction Drawing Not Preceded by Design Development (Title I)

_____ Project Manager _____ Date

SCHEMATIC DESIGN

DEPARTMENT OF THE INTERIOR

NATIONAL PARK SERVICE
DENVER SERVICE CENTER

TITLE OF DRAWING
LOW WATER RAMPS

LOCATION WITHIN PARK
BULLFROG MARINA

NAME OF PARK
GLEN CANYON NATIONAL RECREATION AREA

REGION	COUNTY	STATE
INTERMOUNTAIN	KANE	UTAH

DRAWING NO. #XXX XXXXXX

PMIS/PKG NO. 318882

SHEET 1 OF 45

NOT FOR CONSTRUCTION

2/27/2023 3:44:02 PM C:\pw_workdir\den003\ch2mhill_hmorton\d1482896\318882_G0-COVER.dwg

NOTES

1. STAGING AND STOCKPILING IS PERMISSIBLE WITHIN THE AREA OF POTENTIAL EFFECT (APE),
2. STAGING AREAS MUST BE LOCATED OUTSIDE OF WETLANDS AREAS.

DESIGNED: AR CADD: HM TECH. REVIEW: RVW DATE: 2/27/23	SUB SHEET NO. G1	TITLE OF DRAWING GENERAL OVERALL PROJECT SITE MAP GLEN CANYON NATIONAL RECREATION AREA	DRAWING NO. #XXX / XXXXXX PMIS/PKG NO. 318882 SHEET 2 OF 45

NOT FOR CONSTRUCTION

2/27/2023 3:49:27 PM C:\pw_workdir\den003\ch2mhill_hmorton\d1482896\318882_G2-STMAP.dwg

0 1,000 2,000 3,000

SCALE: 1" = 1,000'

DATUM: UTM 12N, NAD83(2011), NAVD88 GEOID 18, US SURVEY FT

DESIGNED: AR CADD: HM TECH. REVIEW: ---- DATE: 2/27/23	SUB SHEET NO. G2	TITLE OF DRAWING GENERAL SURVEY CONTROL GLEN CANYON NATIONAL RECREATION AREA	DRAWING NO. #XXX XXXXXX PMIS/PKG NO. 318882 SHEET 3 OF 45

NOT FOR CONSTRUCTION

2/27/2023 4:07:36 PM C:\pw_workdir\den003\ch2mhill_hmorton\d1482896\318882_G3-SVMAP.dwg

SYMBOL LEGEND

- SURVEY CONTROL POINT
- MONUMENT BRASS CAP
- BLOWOFF VALVE
- COMMUNICATION BOX / PEDESTAL
- COMMUNICATION MARKER POST
- FIBER OPTIC VAULT
- TELEPHONE PEDESTAL
- ELECTRIC BOX
- ELECTRIC TRANSFORMER
- ELECTRIC CABINET
- ELECTRIC OUTLET
- ELECTRIC SWITCH
- FIRE HYDRANT
- FUEL PUMP
- GAS MARKER POST
- GAS METER
- GAS VALVE
- LIGHT POLE
- SANITARY MANHOLE
- SANITARY PUMP
- SANITARY VALVE
- FLARED END SECTION
- TRASH COMPACTOR
- MISC UTILITY
- UTILITY VAULT
- FIRE HYDRANT
- WATER MANHOLE
- WATER MARKER POST
- WATER MISC POINT
- WATER PUMP

UTILITY LINE LEGEND

- UED — ELECTRIC LINE QUALITY LEVEL "D"
- UCB — COMMUNICATION LINE QUALITY LEVEL "B"
- UCD — COMMUNICATION LINE QUALITY LEVEL "D"
- UWB — WATER LINE QUALITY LEVEL "B"
- UWD — WATER LINE QUALITY LEVEL "D"
- USSC — SANITARY LINE QUALITY LEVEL "C"
- USSD — SANITARY LINE QUALITY LEVEL "D"
- UGB — GAS LINE QUALITY LEVEL "B"
- UFOB — FIBER OPTIC LINE QUALITY LEVEL "B"
- ROAD CENTERLINE
- CULVERT

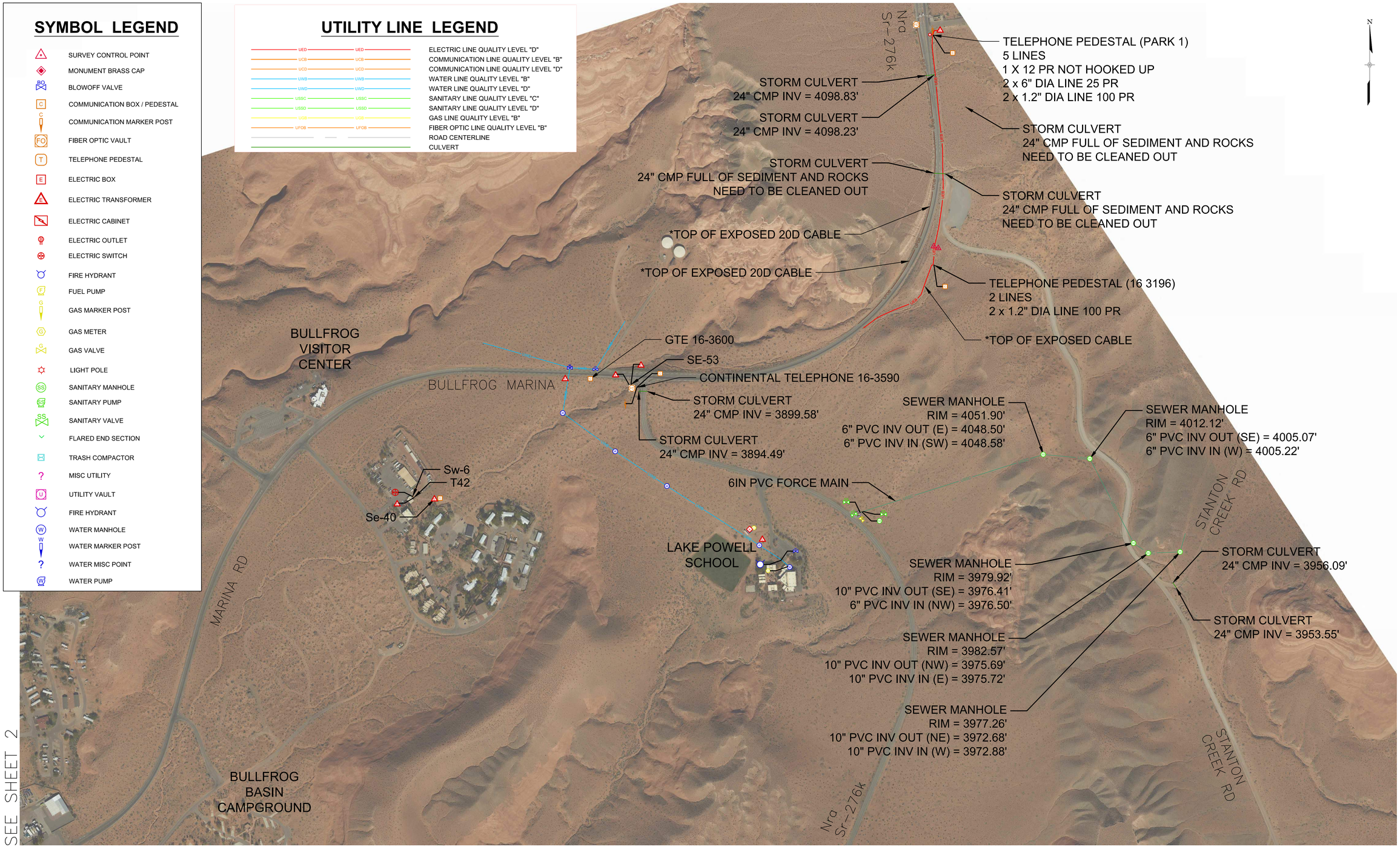

SEE SHEET 2

COORDINATE SYSTEM: UNIVERSAL TRANSVERSE MERCATOR ZONE 12N (UTM 12N)
DATUM: NORTH AMERICAN DATUM OF 1983 2011 ADJUSTMENT (NAD83(2011))
VERTICAL DATUM: NORTH AMERICAN VERTICAL DATUM OF 1988 (NAVD88 GEOID 18B)
UNITS: US SURVEY FEET

SCALE @1" : 300'
300 0 300 600
SCALE OF FEET

DESIGNED: R. ERICKSON	SUB SHEET NO.	TITLE OF DRAWING	DRAWING NO.
CADD: I. KHAN	G3	GENERAL	#XXX / XXXXXX
TECH. REVIEW: N. JONES		UTILITY SURVEY	PMIS/PKG NO. 318882
DATE: 2/28/23		SURVEY DATES: 2/22/22 to 2/24/2022	SHEET 4 OF 45
		GLEN CANYON NATIONAL RECREATION AREA	

NOT FOR CONSTRUCTION

2/28/2023 5:30:42 PM C:\pw_workdir\den003\ch2mhill_hmorton\d1482896\318882_G4-UTSVMAP.dwg

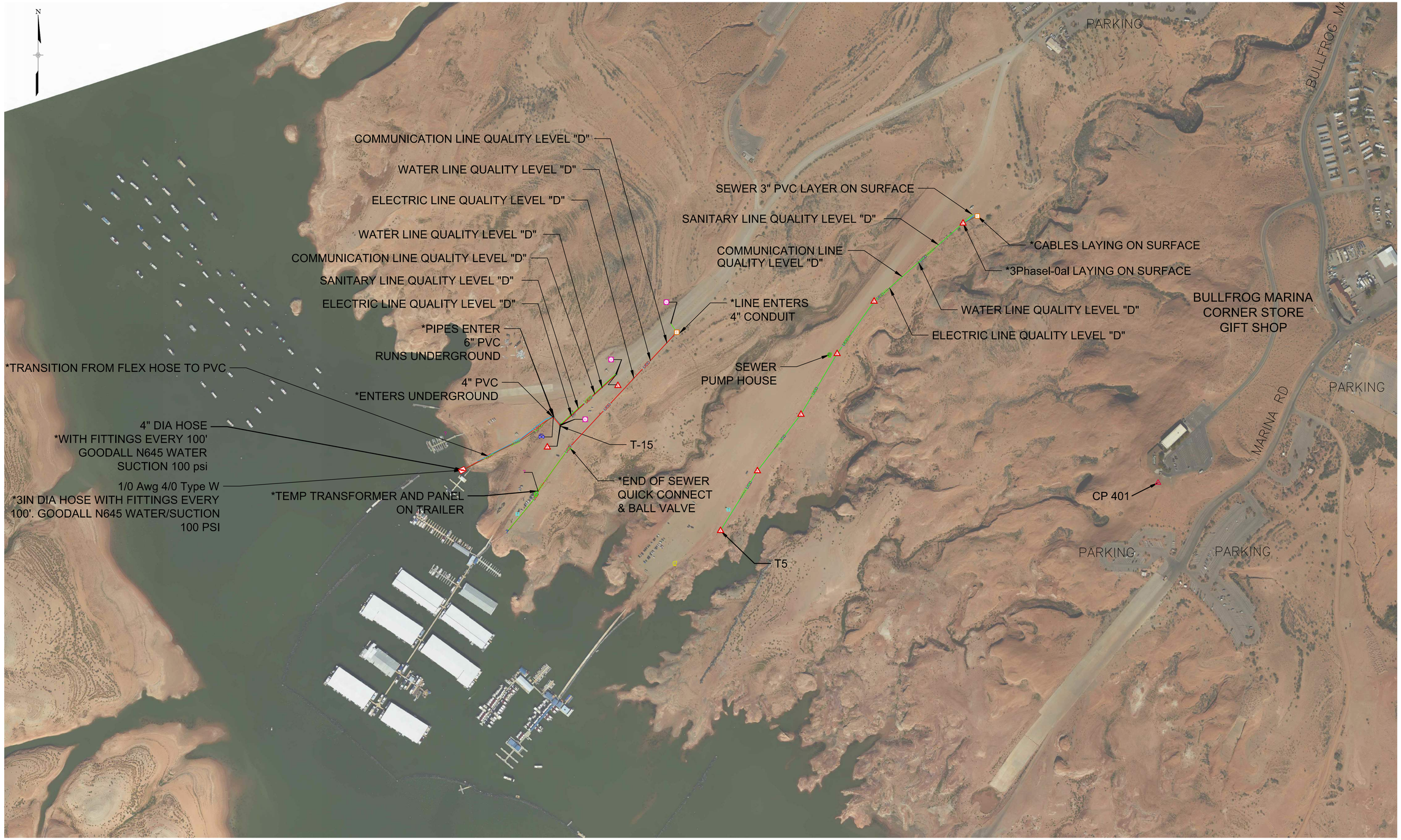

SEE SHEET 1

COORDINATE SYSTEM: UNIVERSAL TRANSVERSE MERCATOR ZONE 12N (UTM 12N)
DATUM: NORTH AMERICAN DATUM OF 1983 2011 ADJUSTMENT (NAD83(2011))
VERTICAL DATUM: NORTH AMERICAN VERTICAL DATUM OF 1988 (NAVD88 GEOID 18B)
UNITS: US SURVEY FEET

SCALE #1" : 300'
300 0 300 600
SCALE OF FEET

DESIGNED: R. ERICKSON CADD: J. KHAN TECH. REVIEW: N. JONES DATE: 2/28/23	SUB SHEET NO. G4	TITLE OF DRAWING GENERAL UTILITY SURVEY SURVEY DATES: 2/22/22 to 2/24/2022 GLEN CANYON NATIONAL RECREATION AREA	DRAWING NO. #XXX XXXXXX PMIS/PKG NO. 318882 SHEET 5 OF 45

NOT FOR CONSTRUCTION

2/28/2023 5:32:23 PM C:\pw_workdir\den003\ch2mhill_hmorton\d1482896\318882_G4-UTSVMAP.dwg

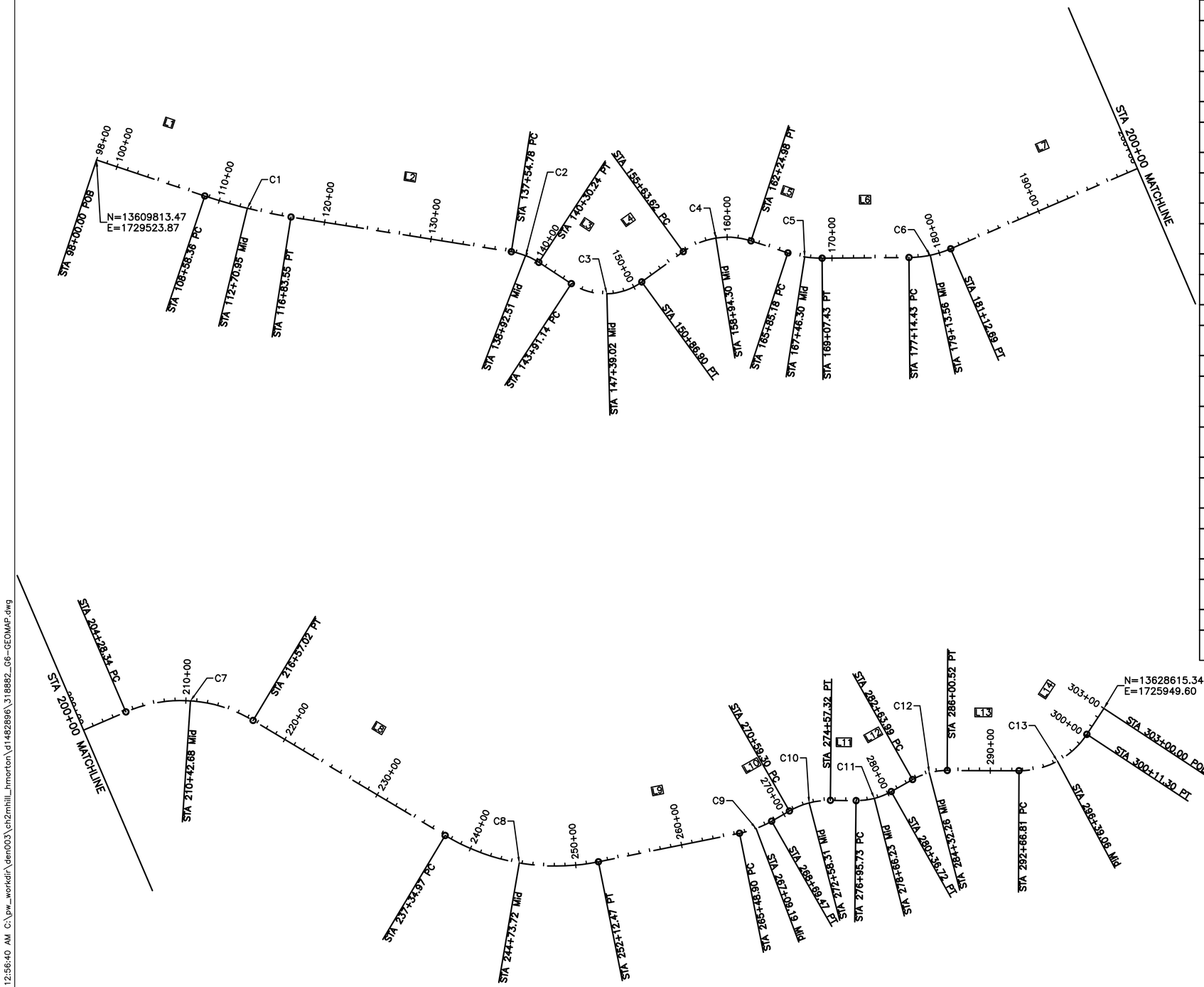

STANTON CREEK ROAD						
Number	Length	Radius	Line/Chord Direction	DELTA	NORTHING	EASTING
L1	1058.356		N08° 00' 39.54"E		START 13609813.47 END 13610861.50	START 1729523.87 END 1729671.37
C1	825.199	5000.000	N03° 16' 58.60"E	009		
L2	2071.222		N01° 26' 42.35"W		START 13611684.41 END 13613754.97	START 1729718.57 END 1729666.34
C2	275.462	650.000	N10° 41' 43.88"E	024		
L3	360.907		N22° 50' 10.10"E		START 13614023.63 END 13614356.24	START 1729717.08 END 1729857.14
C3	695.755	575.000	N11° 49' 41.05"W	069		
L4	476.723		N46° 29' 32.21"W		START 13614996.44 END 13615324.64	START 1729723.07 END 1729377.32
C4	661.358	700.000	N19° 25' 32.96"W	054		
L5	360.196		N07° 38' 26.30"E		START 13615925.41 END 13616282.40	START 1729165.45 END 1729213.34
C5	322.251	1000.000	N01° 35' 28.26"W	018		
L6	807.001		N10° 49' 22.82"W		START 13616603.14 END 13617395.78	START 1729204.43 END 1729052.89
C6	398.261	1000.000	N22° 13' 56.46"W	023		
L7	2315.654		N33° 38' 30.11"W		START 13617762.01 END 13619689.83	START 1728903.20 END 1727620.33
C7	1228.674	1300.000	N06° 33' 56.15"W	054		
L8	2077.954		N20° 30' 37.81"E		START 13620865.52 END 13622811.75	START 1727485.02 END 1728213.09
C8	1477.493	2000.000	N00° 39' 10.90"W	042		
L9	1336.434		N21° 48' 59.62"W		START 13624255.78 END 13625496.50	START 1728196.63 END 1727699.96
C9	320.572	1000.000	N31° 00' 00.97"W	018		
L10	189.825		N40° 11' 02.33"W		START 13625770.10 END 13625915.13	START 1727535.56 END 1727413.08
C10	398.019	750.000	N24° 58' 50.83"W	030		
L11	238.415		N09° 46' 39.34"W		START 13626271.69 END 13626506.64	START 1727246.95 END 1727206.47
C11	340.990	650.000	N24° 48' 22.52"W	030		
L12	227.268		N39° 50' 05.70"W		START 13626812.63 END 13626987.15	START 1727065.04 END 1726919.45
C12	336.536	650.000	N25° 00' 09.09"W	030		
L13	666.285		N10° 10' 12.47"W		START 13627288.75 END 13627944.57	START 1726778.80 END 1726661.15
C13	744.493	750.000	N38° 36' 27.67"W	057		
L14	288.697		N67° 02' 42.88"W		START 13628502.75 END 13628615.34	START 1726215.44 END 1725949.60

DESIGNED: AR CADD: HNM TECH. REVIEW: ---- DATE: 1/19/23	SUB SHEET NO. G5	TITLE OF DRAWING GENERAL GEOMETRIC LAYOUT GLEN CANYON NATIONAL RECREATION AREA	DRAWING NO. #XXX XXXXXX PMIS/PKG NO. 318882 SHEET 6 OF 45

NOT FOR CONSTRUCTION

1/19/2023 12:56:40 AM C:\pw_workdir\den003\ch2mhill_hmorton\d1482896\318882_G6-GEOMAP.dwg

ABBREVIATIONS

ABDN	ABANDON
ADD.	ADDITIONAL
APPROX	APPROXIMATELY
ASTM	AMERICAN SOCIETY FOR TESTING AND MATERIALS
BL	BASELINE
BM	BENCH MARK
BMP	BEST MANAGEMENT PRACTICES
BP	BEGINNING POINT
BOT	BOTTOM
BOP	BOTTOM OF PIPE
BVC	BEGINNING OF VERTICAL CURVE
CIP	CAST-IN-PLACE
CGP	CONSTRUCTION GENERAL PERMIT
CJ	CONTRACTION JOINT
CL	CENTER LINE
CLR	CLEAR
CMP	CORRUGATED METAL PIPE
COMM	COMMUNICATION
CONC	CONCRETE
CONST	CONSTRUCTION
CONSTR	CONSTRUCT
CO	CONTRACTOR
CP	CENTER POINT
CR	CRACK
CTR	CENTER
CU	CUBIC
CU FT	CUBIC FOOT
CU IN	CUBIC INCH
CU YD	CUBIC YARD
DBH	DIAMETER BREAST HEIGHT
DET	DETAIL
DIA	DIAMETER
DWG	DRAWING
DWG'S	DRAWINGS
DWL	DESIGN WATER LEVEL
EA	EACH
EF	EACH FACE
EJ	EXPANSION JOINT
EL	ELEVATION
ELEC	ELECTRIC, ELECTICAL
EMBED	EMBEDMENT
EP	END POINT
EPA	ENVIRONMENTAL PROTECTION AGENCY
ENGR	ENGINEER
EOP	EDGE OF PAVEMENT
EQ	EQUAL
ETR	EXISTING TO REMAIN
EW	EACH WAY
EXIST	EXISTING
FF	FINISHED FLOOR
FT	FEET
GALV	GALVANIZED
GB	GRADE BRAKE
GR	GRAPHIC
GSE	GROUND SURFACE ELEVATION
HP	HIGH POINT
HH	HANDHOLE
ID	IDENTIFICATION
IGLD	INTERNATIONAL GREAT LAKES DATUM
IN	INCHES
INV	INVERT
LF	LINEAR FEET
LG	LONG
LOD	LIMITS OF DISTURBANCE
LP	LOW POINT
LWF	LIGHT WEIGHT FILL
MANF	MANUFACTURER
MAX	MAXIMUM
MH	MANHOLE
MIN	MINIMUM
NE	NOT ENCOUNTERED
NF	NEAR FACE
NIC	NOT IN CONTRACT
NTS	NOT TO SCALE
NUM	NUMBER
OC	ON CENTER
PC	POINT OF CURVATURE
PCC	POINT OF COMPOUND CURVATURE
PCF	POUNDS PER CUBIC FOOT
PKG	PACKAGE
PLYWD	PLYWOOD
PMS	PAD-MOUNTED SWITCH
PMT	PAD-MOUNTED TRANSFORMER
PROP	PROPOSED
PSF	POUNDS PER SQUARE FOOT
PSI	POUNDS PER SQUARE INCH
PT	POINT OF TANGENT
RC	REINFORCED CONCRETE
REF	REFERENCE
REQ'D	REQUIRED
SAN SWR	SANITARY SEWER
SEC	SECONDS
SF	SQUARE FEET
SHT	SHEET
SIM	SIMILAR
SPEC	SPECIFICATION
S.R.	STATE ROUTE
S.S.T.	STAINLESS STEEL
STA	STATION
STP	STANDARD PENETRATION TEST
SWP3	SITE STORM WATER POLLUTION PREVENTION PLAN
T&B	TOP AND BOTTOM
TEMP	TEMPORARY
TG	TOP OF GRATE (CB)
THK	THICK
T.O._	TOP OF __
TOC	TOP OF CONCRETE
TOW	TOP OF WALL
TS&V	TAPPING SLEEVE AND VALVE
TSW	TOP OF SIDEWALK
(TYP.)	TYPICAL
UON	UNLESS OTHERWISE NOTED
USACE	UNITED STATES ARMY CORPS OF ENGINEERS
VIF	VERIFY IN FIELD
W/	WITH
WD	WOOD
W_L MIN	WATER LEVEL MINIMUM
W_L MAX	WATER LEVEL MAXIMUM
WP	WORKING POINT
WWF	WELDED WIRE FABRIC
WZ#	WORK ZONE #
YD	YARD

SECTION / DETAIL DESIGNATIONS

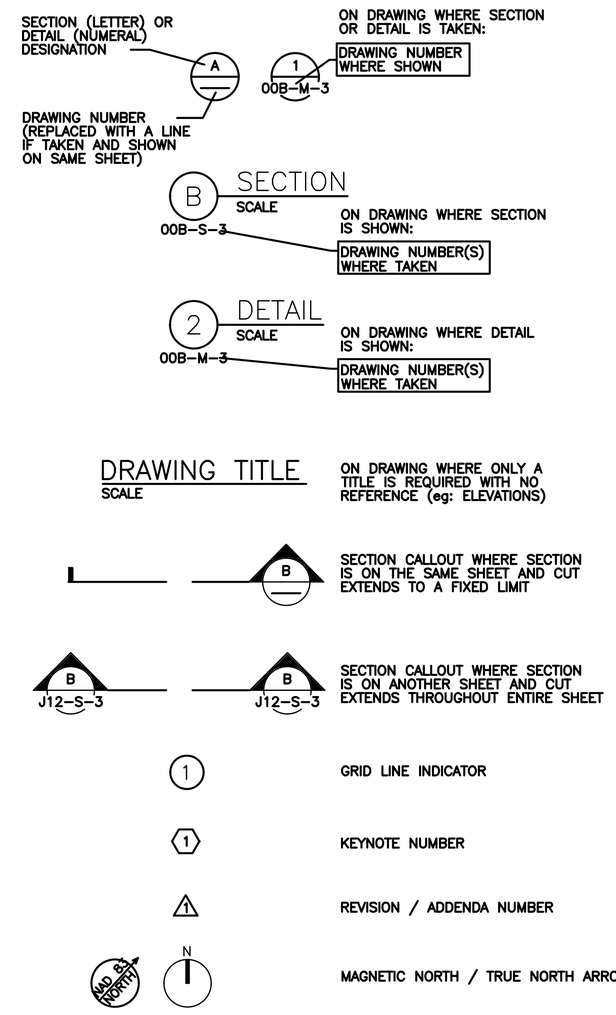

DESIGN DETAIL DESIGNATION

NOTES:

1. ALL DESIGN DETAILS ARE TYPICAL AND MUST BE USED IF DESIGN DETAIL DESIGNATION IS NOT SHOWN
2. THE TERMS STANDARD DETAILS, TYPICAL DETAILS OR A FORMS OF IT, IS SYNONYMOUS WITH DESIGN DETAIL. THE DESIGN DETAILS REPRESENT THE CHARACTER AND NATURE OF THE WORK REQUIRED THROUGHOUT THE PROJECT. ALL ASSOCIATED WORK SHALL BE IN ACCORDANCE WITH THE DESIGN DETAILS SHOWN WHETHER THE DETAILS ARE SPECIFICALLY REFERENCED OR NOT.

LEGEND

- HIGH WATER LEVEL/FLOODPLAIN BOUNDARY 3700 FT
- APE — APE BOUNDARY
- WETLANDS
- CUT\FILL LINE
- BORING LOCATION

GENERAL NOTE:

1. THIS IS A STANDARD LEGEND SHEET. THEREFORE, NOT ALL OF THE INFORMATION SHOWN MAY BE USED ON THIS PROJECT.

DESIGNED: AR	SUB SHEET NO.	TITLE OF DRAWING GENERAL	DRAWING NO. #XXX / XXXXXX
CADD: HM	G6	GENERAL ABBREVIATIONS AND LEGEND	PMIS/PKG NO. 318882
TECH. REVIEW: ----			SHEET 7 OF 45
DATE: 1/20/23		GLEN CANYON NATIONAL RECREATION AREA	

NOT FOR CONSTRUCTION

1/20/2023 12:24:26 PM C:\pw_workdir\den003\ch2mhill_hmorton\d1482896\318882_G8-ABBV.dwg

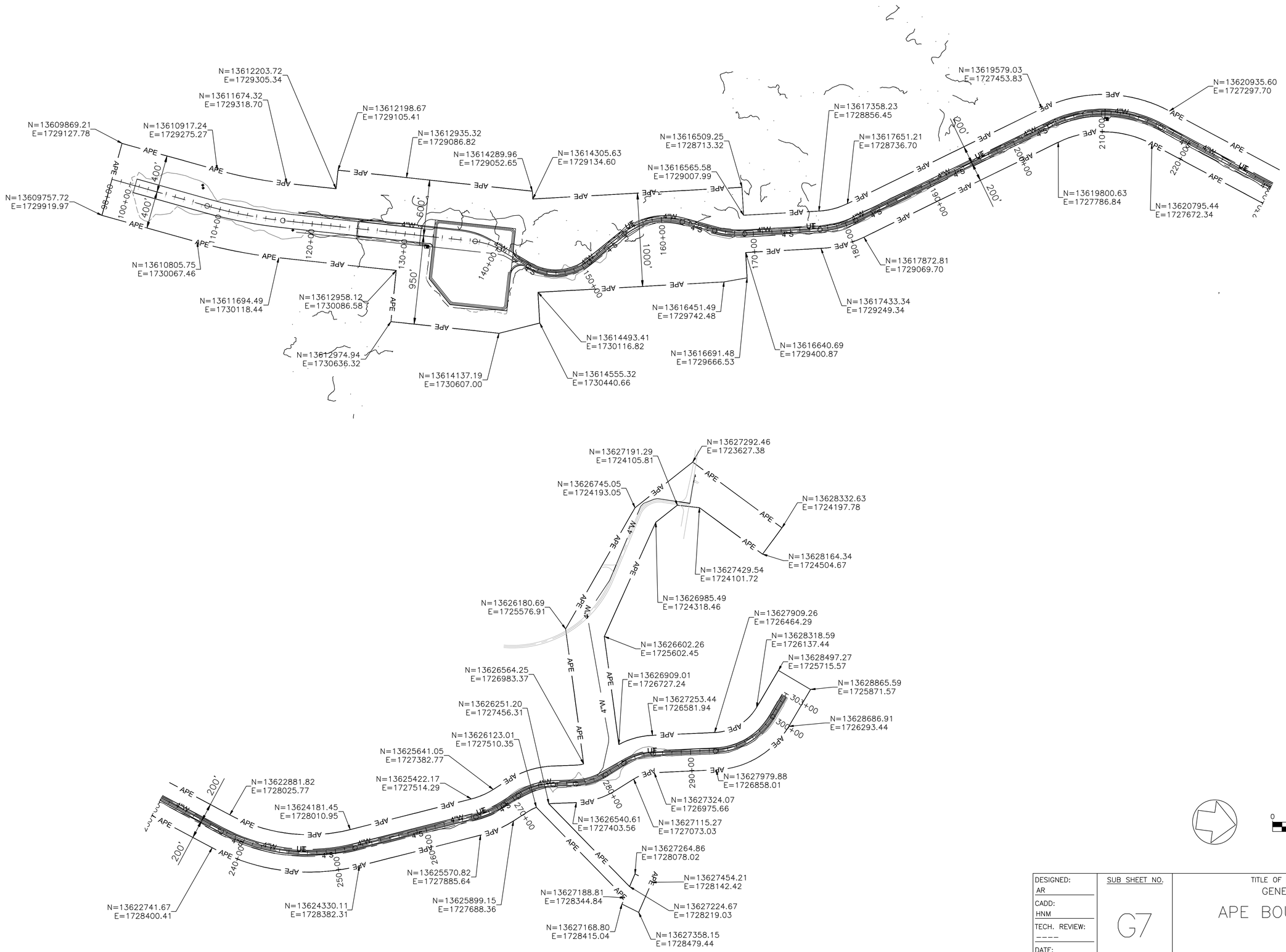

DESIGNED: AR	SUB SHEET NO.	TITLE OF DRAWING GENERAL	DRAWING NO. #XXX XXXXXX
CADD: HNM	G7	APE BOUNDARY	PMIS/PKG NO. 318882
TECH. REVIEW: ----			SHEET
DATE: 2/27/23		GLEN CANYON NATIONAL RECREATION AREA	8 OF 45

NOT FOR CONSTRUCTION

2/27/2023 5:32:35 PM C:\pw_workdir\den003\ch2mhill_hmorton\d1482896\318882_G7-APE-BDRY.dwg

2/27/2023 4:12:01 PM C:\pw_workdir\den003\ch2mhill_hmorton\d1482896\318882_G9-TAB.dwg

DESIGNED: AR CADD: HNM TECH. REVIEW: ---- DATE: 2/27/23	SUB SHEET NO. G8	TITLE OF DRAWING GENERAL BLANK GLEN CANYON NATIONAL RECREATION AREA	DRAWING NO. #XXX XXXXXX PMIS/PKG NO. 318882 SHEET 9 OF 45

NOT FOR CONSTRUCTION

DESIGNED: AR	SUB SHEET NO.	TITLE OF DRAWING GENERAL	DRAWING NO. #XXX XXXXXX
CADD: HM	G9	KEY MAP	PMIS/PKG NO. 318882
TECH. REVIEW: ----			SHEET
DATE: 1/19/23		GLEN CANYON NATIONAL RECREATION AREA	10 OF 45

NOT FOR CONSTRUCTION

1/19/2023 1:29:12 AM C:\pw_workdir\den003\ch2mhill_hmorton\d1482896\318882_G10-KYMAP.dwg

	STATION	LENGTH FT
CONCRETE RAMP	100+56.77 TO 124+85.34	2,429
ASPHALT RAMP ACCESS	124+85.34 TO 133+06.64	821
PARKING AREA	133+06.64 TO 141+93.23	887
STANTON CREEK ROAD	141+93.23 TO 302+67.15	16,074

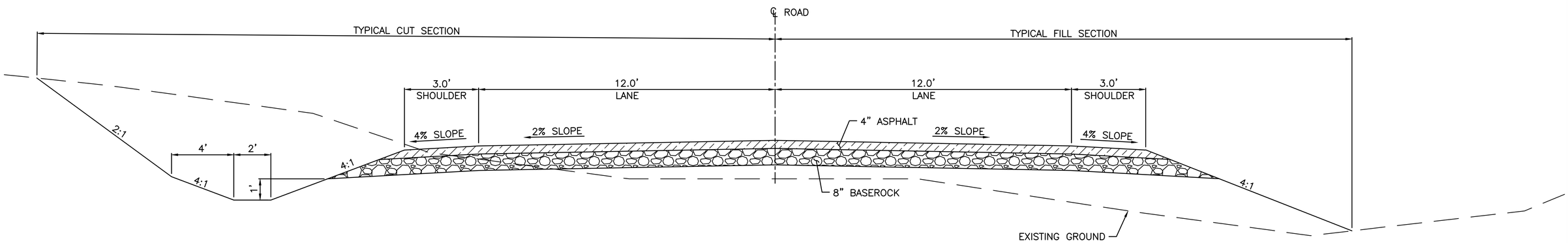

TYPICAL SECTION
STANTON CREEK ROAD
STA. 142+00.00 TO 302+67.15

DESIGNED: AR	SUB SHEET NO.	TITLE OF DRAWING CIVIL	DRAWING NO. #XXX XXXXXX
CADD: HM	C1	STANTON CREEK ROAD TYPICAL SECTION	PMIS/PKG NO. 318882
TECH. REVIEW: ----			SHEET
DATE: 1/19/23		GLEN CANYON NATIONAL RECREATION AREA	11 OF 45

NOT FOR CONSTRUCTION

1/19/2023 3:02:07 AM C:\pw_workdir\den003\ch2mhill_hmorton\d1482894\318882_C1-TYP.dwg

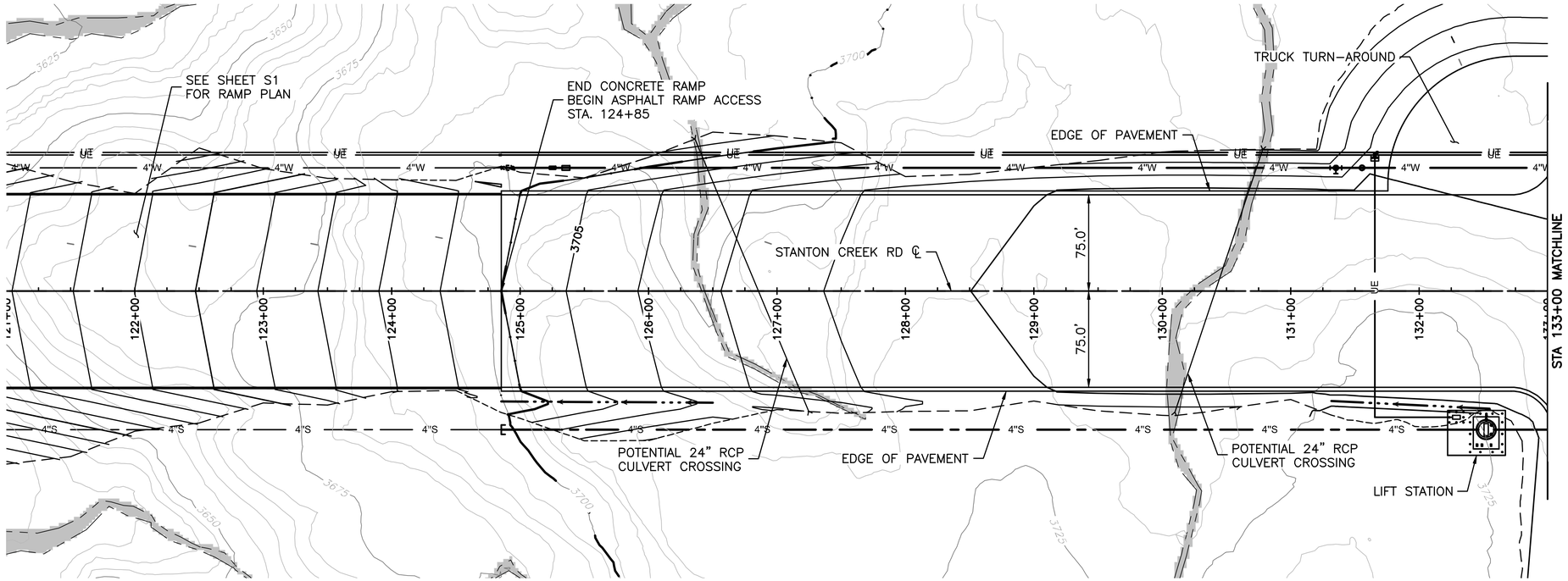

NOTE

1. CONTRACTOR TO VERIFY TYPE, SIZE, AND LOCATION OF CULVERT CROSSINGS.

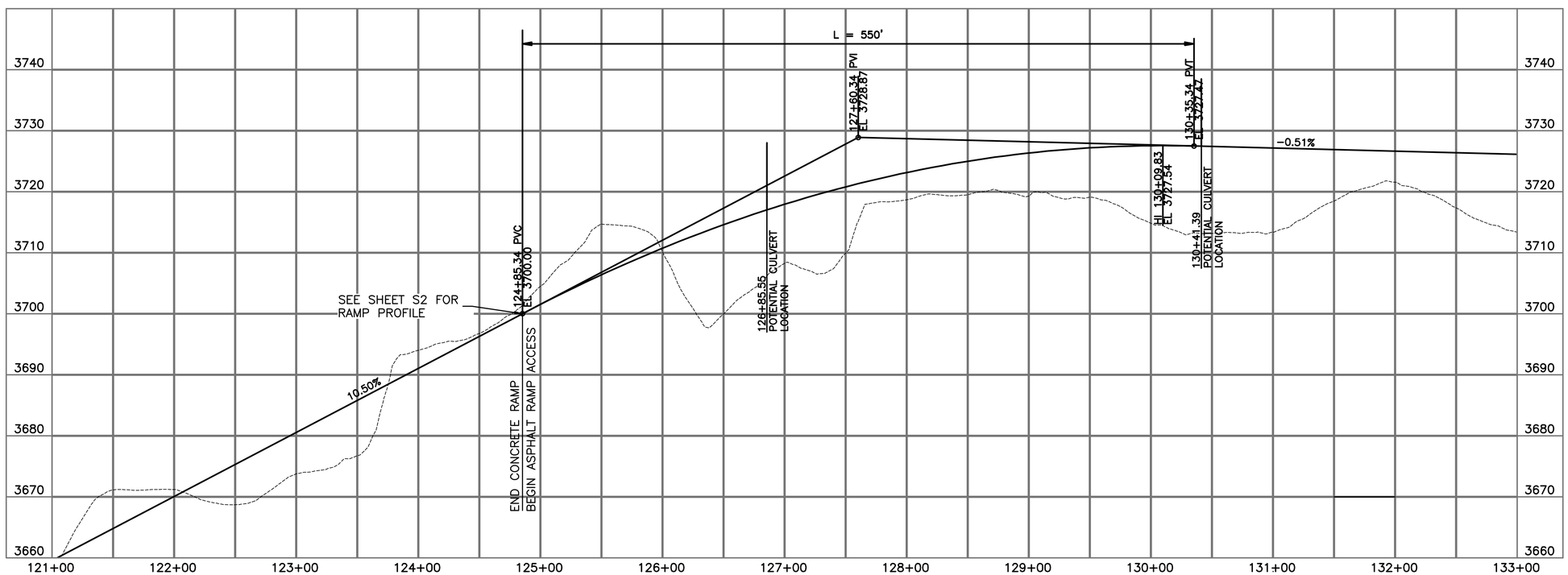

0 50 100 150
SCALE: 1" = 50'

LEGEND

- HIGH WATER LEVEL/FLOODPLAIN BOUNDARY 3700 FT
- APE — APE BOUNDARY
- WETLANDS
- CUT\FILL LINE
- DITCH FLOWLINE

DESIGNED: AR	SUB SHEET NO.	TITLE OF DRAWING	DRAWING NO.
CADD: HM	C2	CIVIL STANTON CREEK ROAD STA. 121+00 TO 133+00	#XXX XXXXXX
TECH. REVIEW: ----			PMIS/PKG NO. 318882
DATE: 2/27/23		GLEN CANYON NATIONAL RECREATION AREA	SHEET 12 OF 45

NOT FOR CONSTRUCTION

2/27/2023 5:09:06 PM C:\pw_workdir\den003\ch2mhill_hmorton\d1482894\318882_C2_C18-PnP.dwg

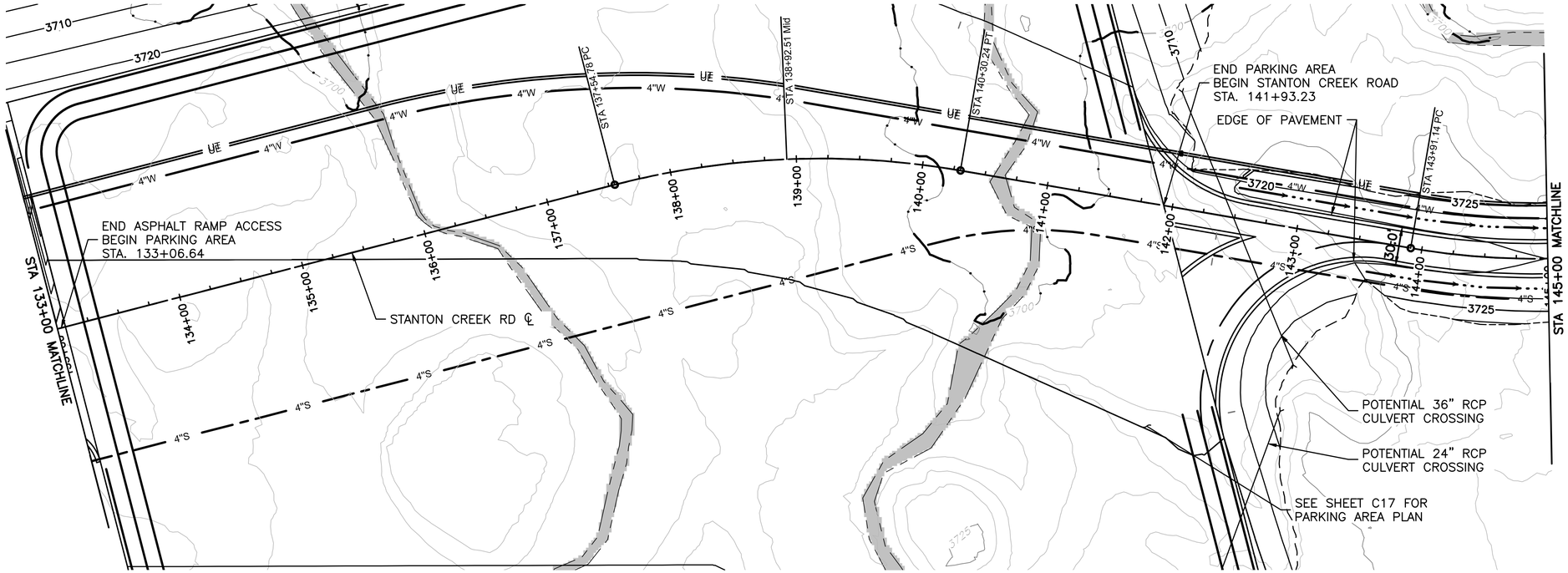

NOTE

1. CONTRACTOR TO VERIFY TYPE, SIZE, AND LOCATION OF CULVERT CROSSINGS.

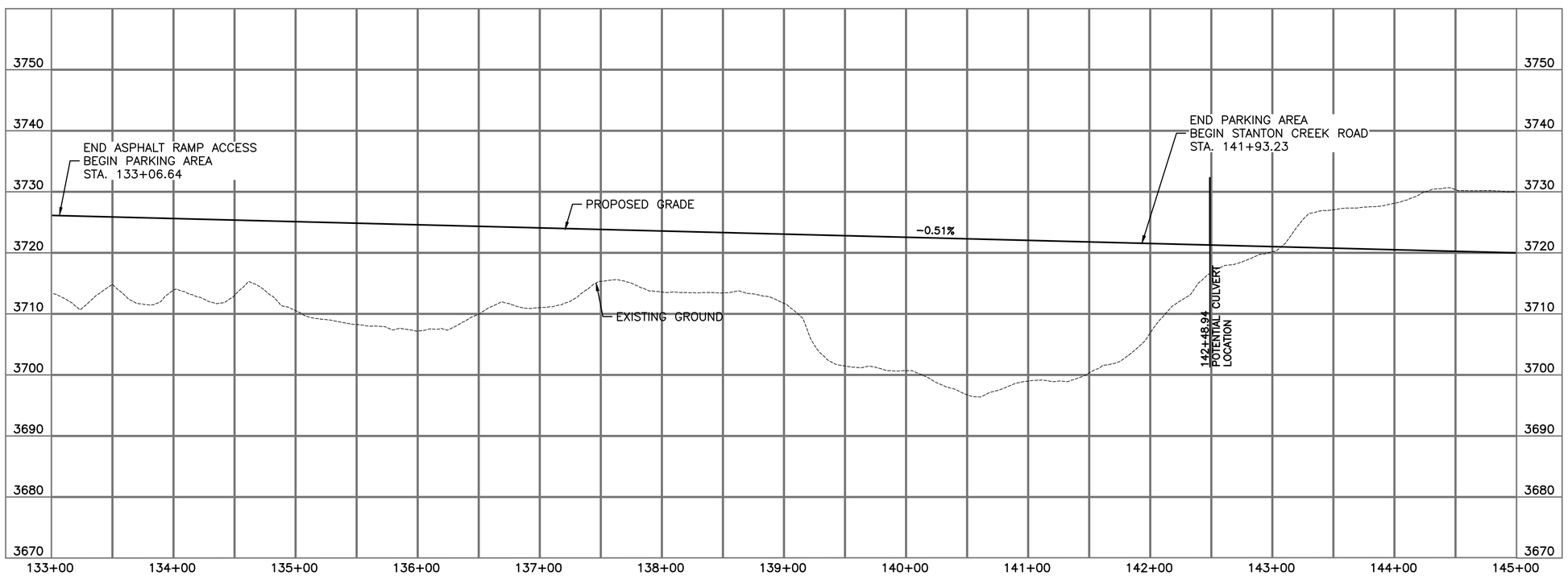

0 50 100 150
SCALE: 1" = 50'

LEGEND

- HIGH WATER LEVEL/FLOODPLAIN BOUNDARY 3700 FT
- APE — APE BOUNDARY
- WETLANDS
- CUT\FILL LINE
- DITCH FLOWLINE

DESIGNED: AR	SUB SHEET NO.	TITLE OF DRAWING CIVIL	DRAWING NO. #XXX XXXXXX
CADD: HM	C3	STANTON CREEK ROAD STA. 133+00 TO 145+00	PMIS/PKG NO. 318882
TECH. REVIEW: ----			SHEET 13 OF 45
DATE: 2/27/23		GLEN CANYON NATIONAL RECREATION AREA	

NOT FOR CONSTRUCTION

2/27/2023 5:12:28 PM C:\pw_workdir\den003\ch2mhill_hmorton\d1482894\318882_C2_C18-PnP.dwg

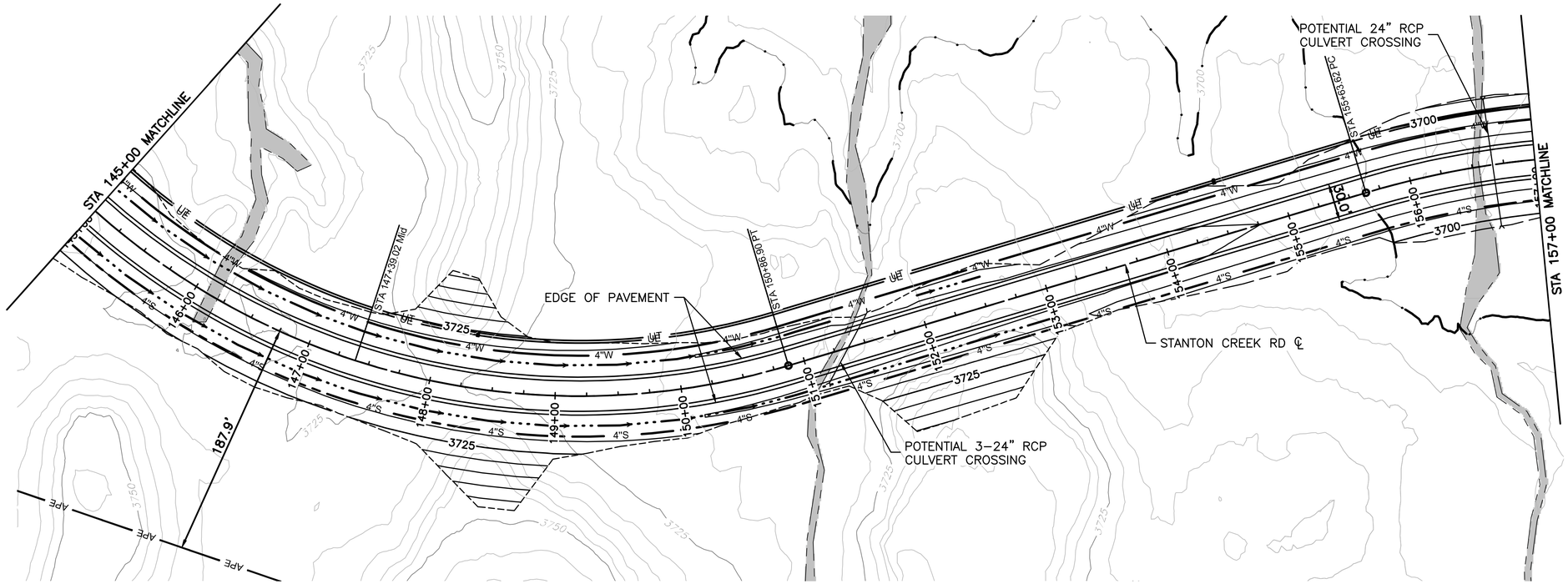

NOTE

1. CONTRACTOR TO VERIFY TYPE, SIZE, AND LOCATION OF CULVERT CROSSINGS.

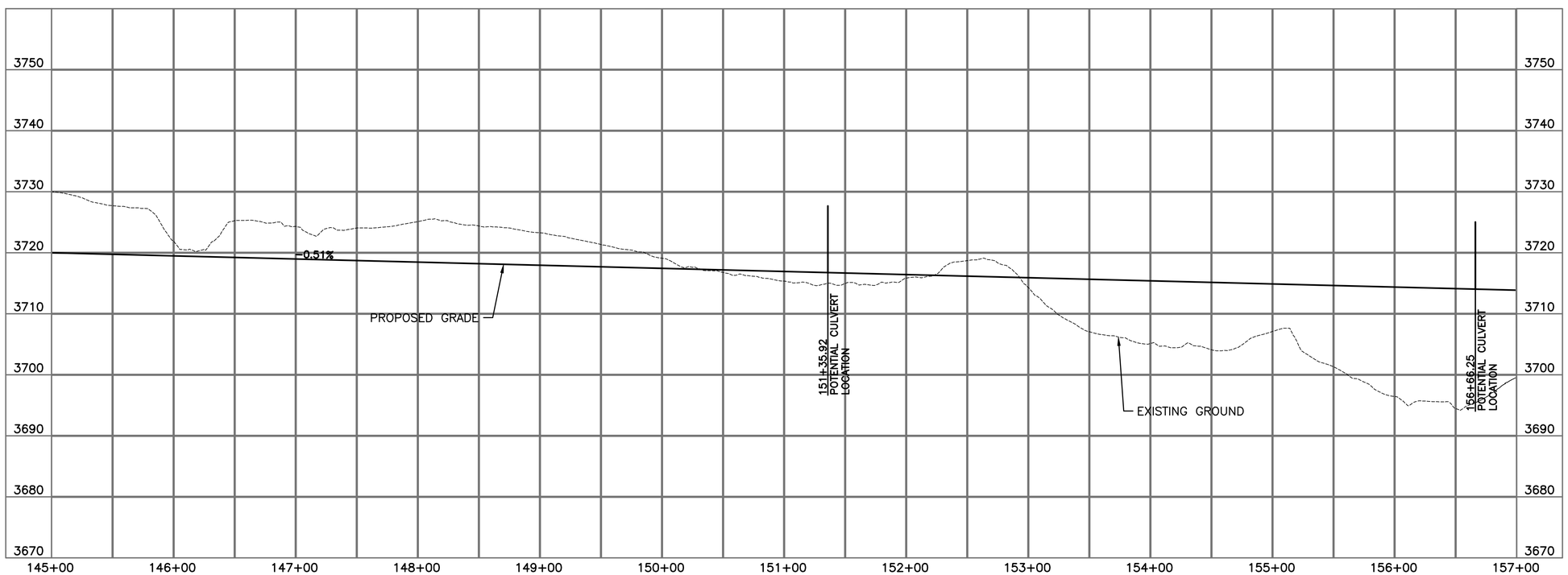

0 50 100 150
SCALE: 1" = 50'

LEGEND

- HIGH WATER LEVEL/FLOODPLAIN BOUNDARY 3700 FT
- APE — APE BOUNDARY
- WETLANDS
- CUT\FILL LINE
- DITCH FLOWLINE

DESIGNED: AR	SUB SHEET NO.	TITLE OF DRAWING	DRAWING NO.
CADD: HM	C4	CIVIL STANTON CREEK ROAD STA. 145+00 TO 157+00	#XXX XXXXXX
TECH. REVIEW: ----			PMIS/PKG NO. 318882
DATE: 2/27/23		GLEN CANYON NATIONAL RECREATION AREA	SHEET 14 OF 45

NOT FOR CONSTRUCTION

2/27/2023 5:13:26 PM C:\pw_workdir\den003\ch2mhill_hmorton\d1482894\318882_C2_C18-PnP.dwg

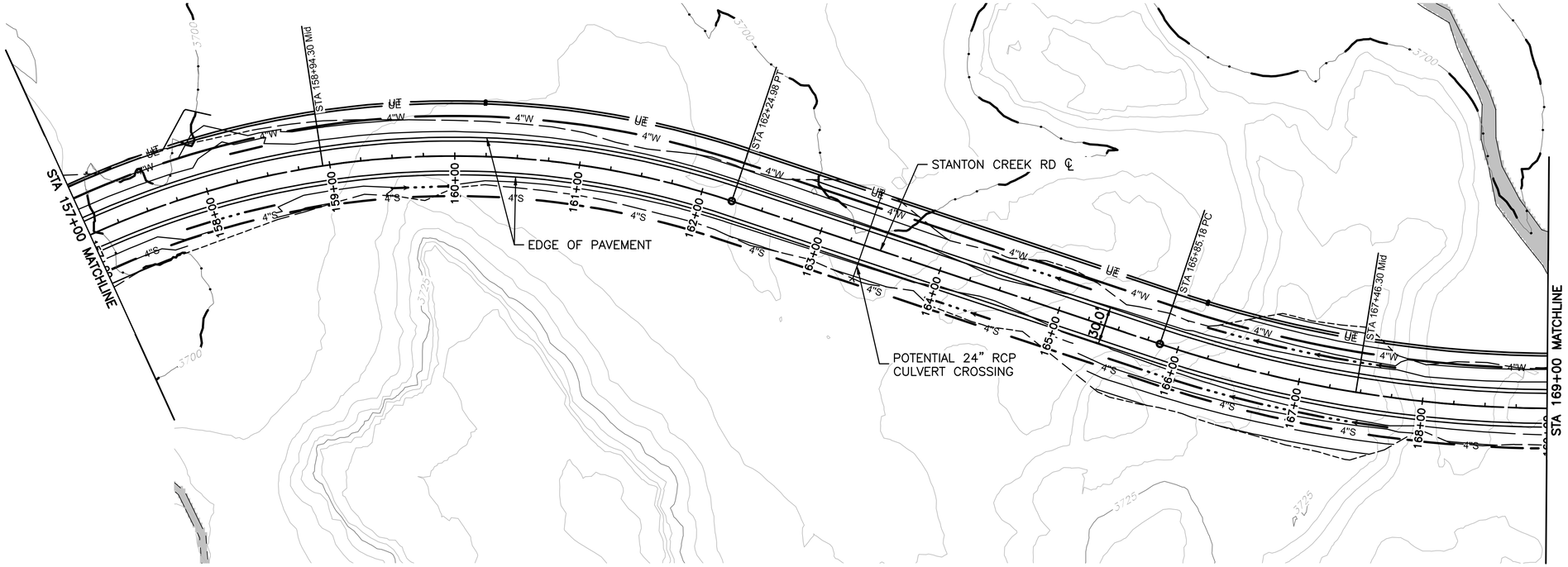

NOTE

1. CONTRACTOR TO VERIFY TYPE, SIZE, AND LOCATION OF CULVERT CROSSINGS.

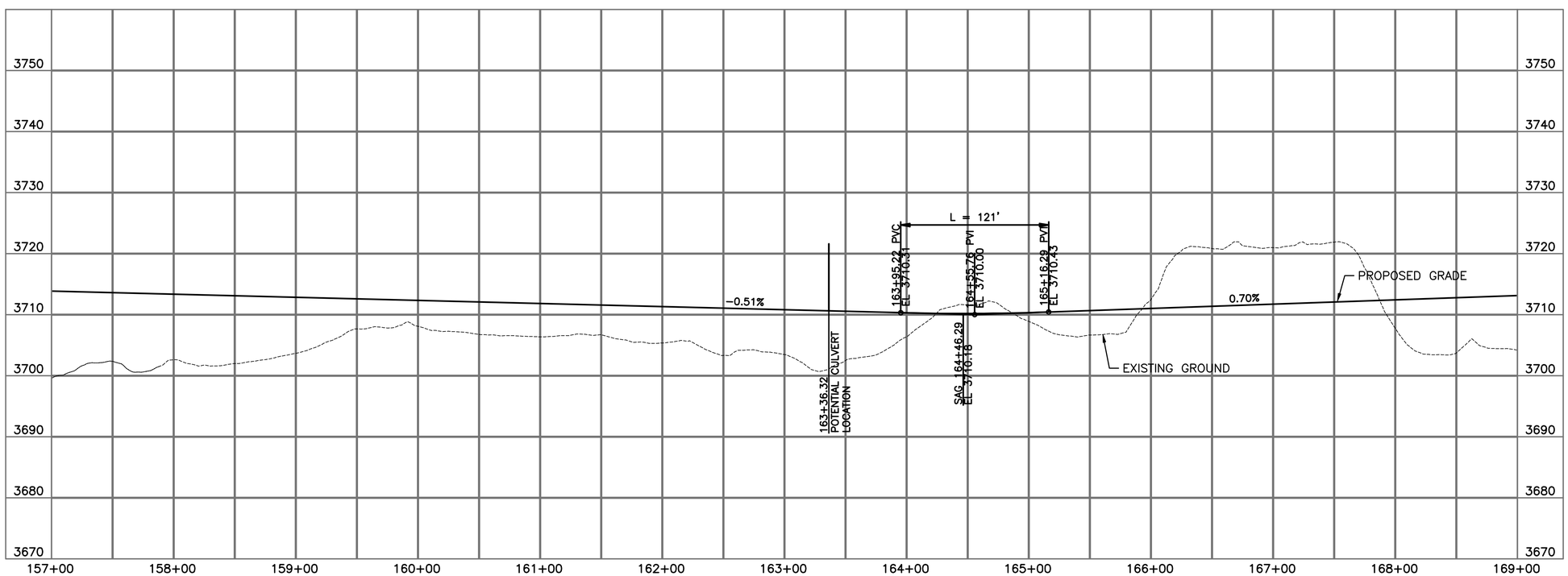

0 50 100 150
SCALE: 1" = 50'

LEGEND

- HIGH WATER LEVEL/FLOODPLAIN BOUNDARY 3700 FT
- APE — APE BOUNDARY
- WETLANDS
- CUT\FILL LINE
- DITCH FLOWLINE

DESIGNED: AR CADD: HM TECH. REVIEW: ---- DATE: 2/27/23	SUB SHEET NO. C5	TITLE OF DRAWING CIVIL STANTON CREEK ROAD STA. 157+00 TO 169+00 GLEN CANYON NATIONAL RECREATION AREA	DRAWING NO. #XXX XXXXXX PMIS/PKG NO. 318882 SHEET 15 OF 45

NOT FOR CONSTRUCTION

2/27/2023 5:14:46 PM C:\pw_workdir\den003\ch2mhill_hmorton\d1482894\318882_C2_C18-PnP.dwg

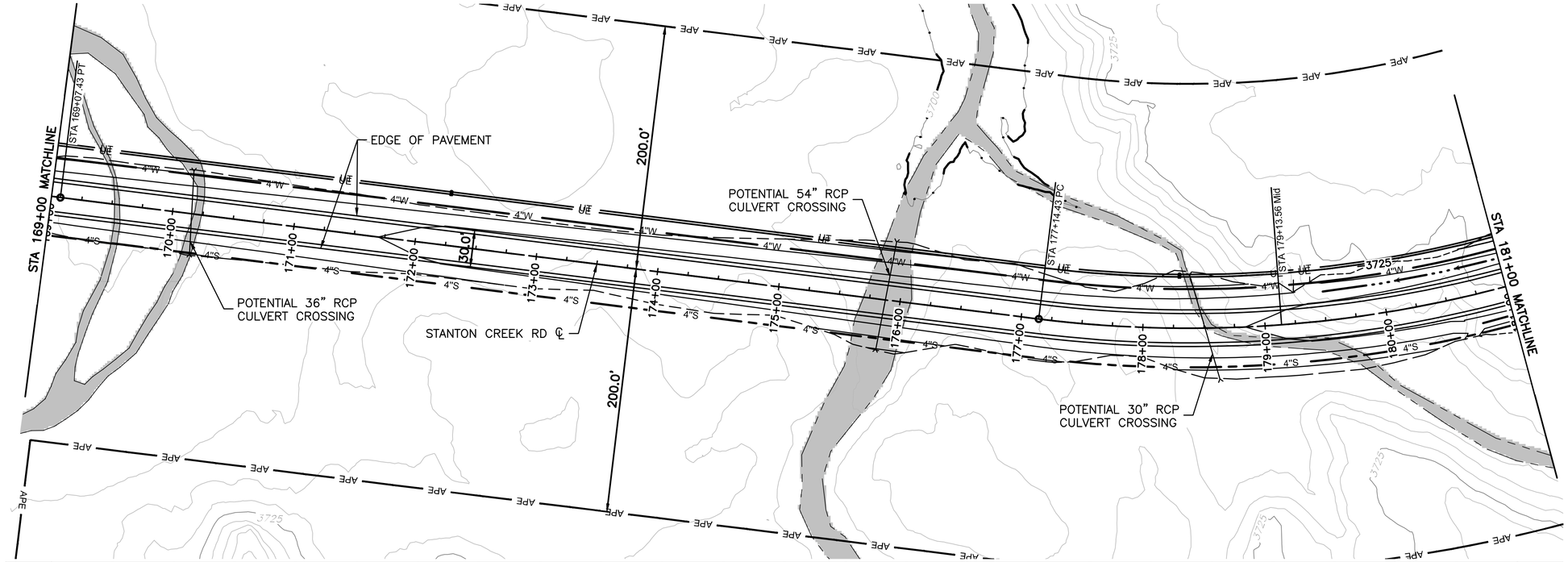

NOTE

1. CONTRACTOR TO VERIFY TYPE, SIZE, AND LOCATION OF CULVERT CROSSINGS.

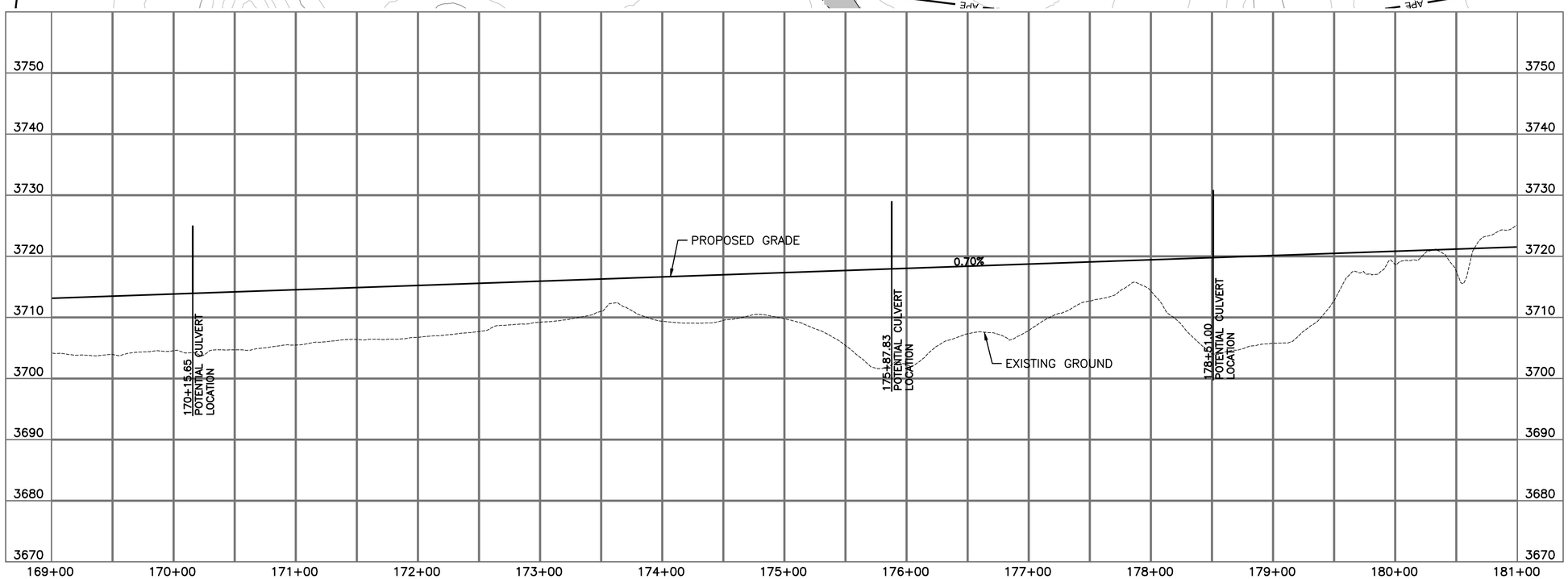

0 50 100 150
SCALE: 1" = 50'

LEGEND

- HIGH WATER LEVEL/FLOODPLAIN BOUNDARY 3700 FT
- APE — APE BOUNDARY
- WETLANDS
- CUT\FILL LINE
- DITCH FLOWLINE

DESIGNED: AR CADD: HM TECH. REVIEW: ---- DATE: 2/27/23	SUB SHEET NO. C6	TITLE OF DRAWING CIVIL STANTON CREEK ROAD STA. 169+00 TO 181+00 GLEN CANYON NATIONAL RECREATION AREA	DRAWING NO. #XXX XXXXXX PMIS/PKG NO. 318882 SHEET 16 OF 45

NOT FOR CONSTRUCTION

2/27/2023 5:15:45 PM C:\pw_workdir\den003\ch2mhill_hmorton\d1482894\318882_C2_C18-PnP.dwg

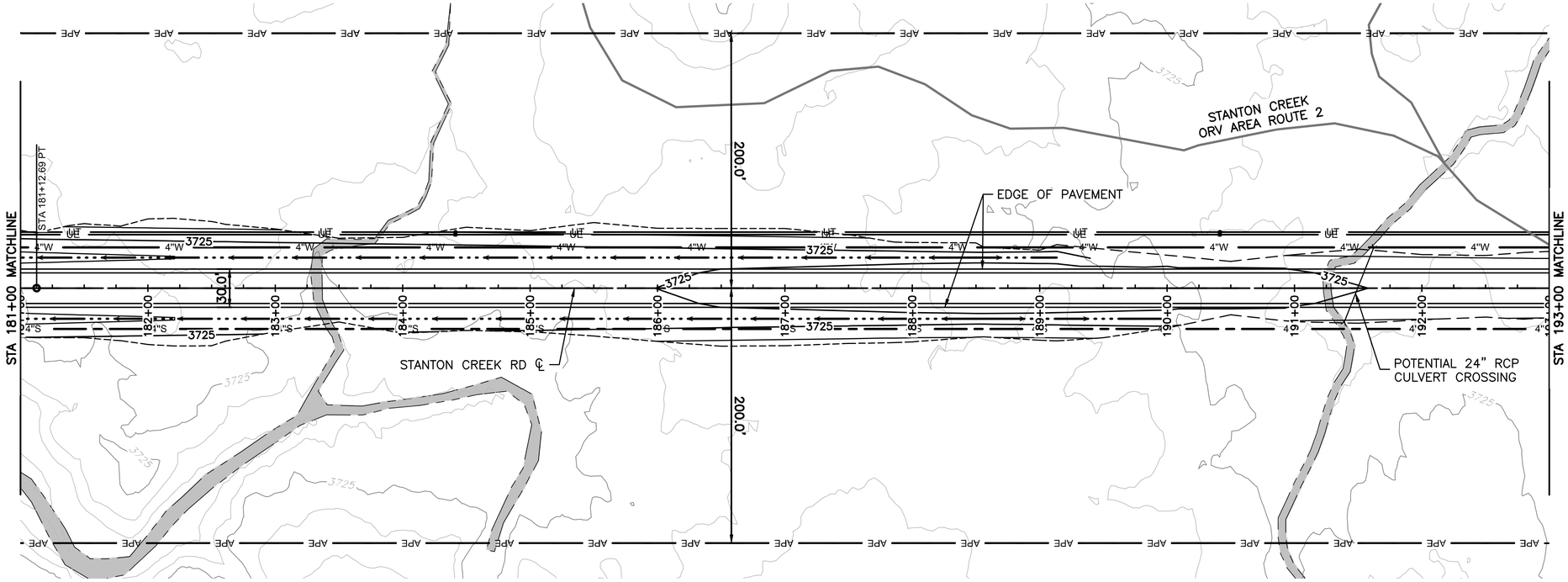

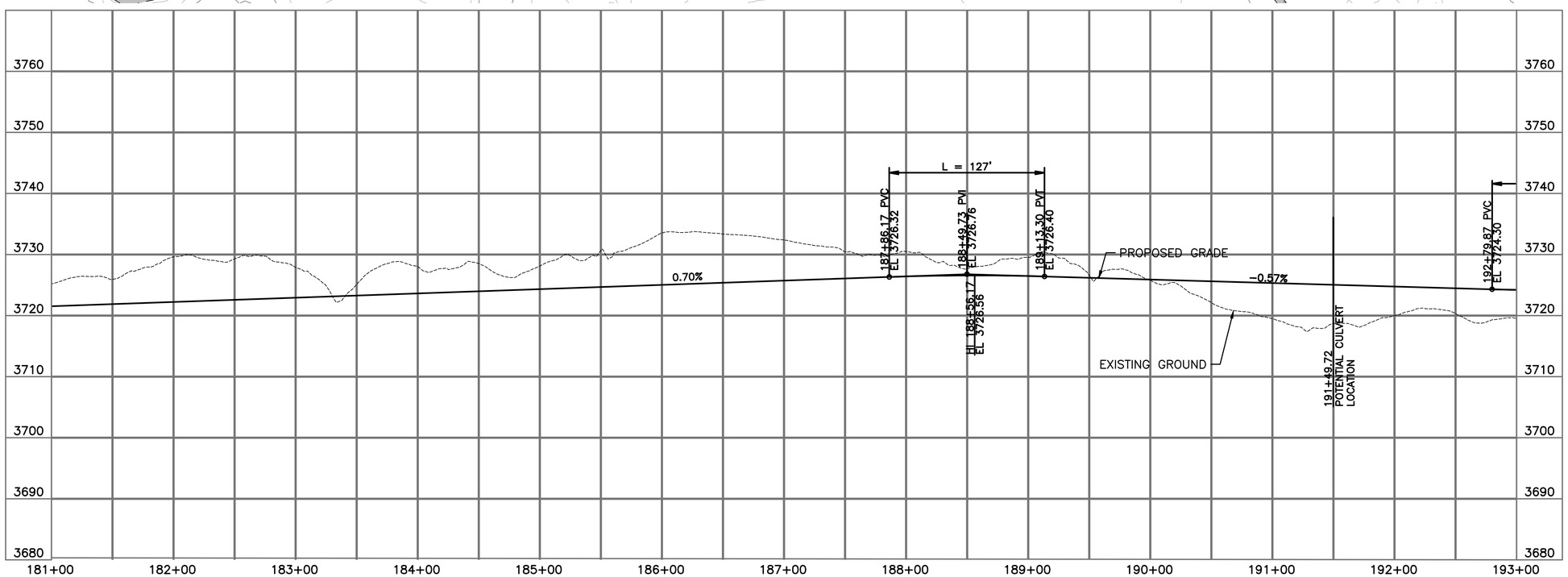

NOTE

1. CONTRACTOR TO VERIFY TYPE, SIZE, AND LOCATION OF CULVERT CROSSINGS.

0 50 100 150
SCALE: 1" = 50'

LEGEND

- HIGH WATER LEVEL/FLOODPLAIN BOUNDARY 3700 FT
- APE — APE BOUNDARY
- WETLANDS
- CUT\FILL LINE
- DITCH FLOWLINE

DESIGNED: AR CADD: HM TECH. REVIEW: ---- DATE: 2/27/23	SUB SHEET NO. C7	TITLE OF DRAWING CIVIL STANTON CREEK ROAD STA 181+00 TO 193+00 GLEN CANYON NATIONAL RECREATION AREA	DRAWING NO. #XXX XXXXXX PMIS/PKG NO. 318882 SHEET 17 OF 45

NOT FOR CONSTRUCTION

2/27/2023 5:16:24 PM C:\pw_workdir\den003\ch2mhill_hmorton\d1482894\318882_C2_C18-PnP.dwg

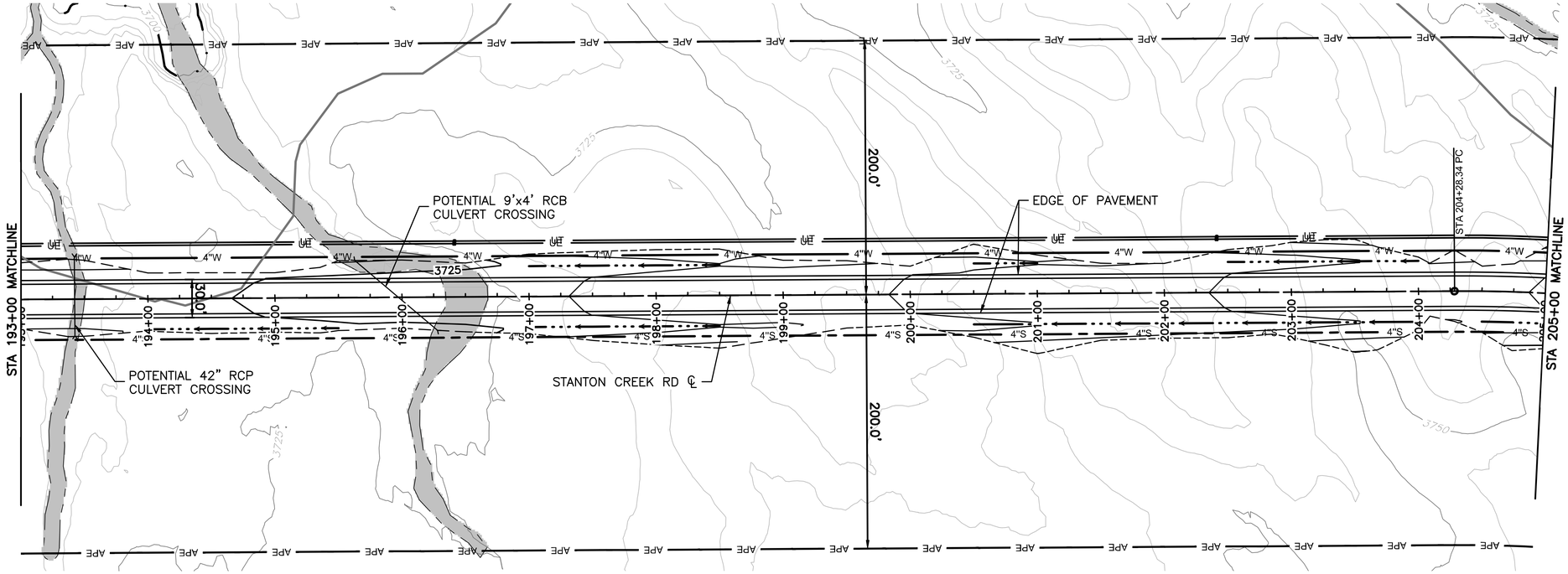

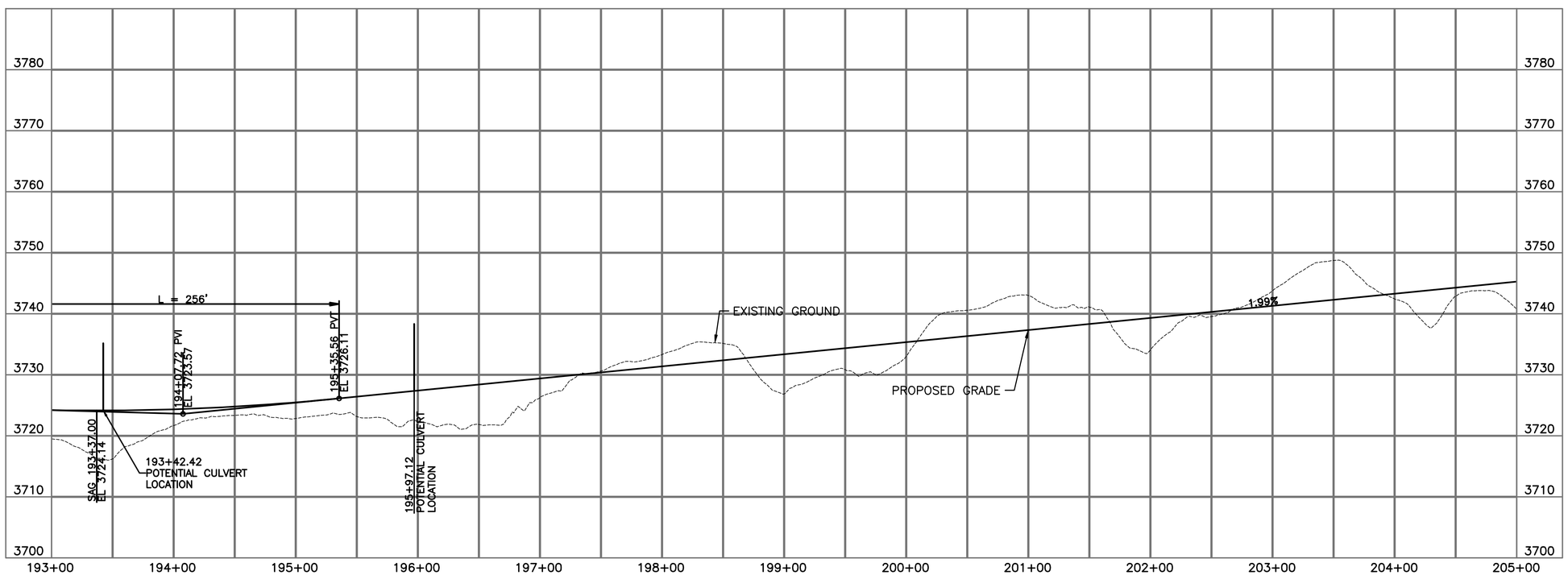

NOTE

1. CONTRACTOR TO VERIFY TYPE, SIZE, AND LOCATION OF CULVERT CROSSINGS.

0 50 100 150
SCALE: 1" = 50'

LEGEND

- HIGH WATER LEVEL/FLOODPLAIN BOUNDARY 3700 FT
- APE — APE BOUNDARY
- WETLANDS
- CUT\FILL LINE
- DITCH FLOWLINE

DESIGNED: AR CADD: HM TECH. REVIEW: ---- DATE: 2/27/23	SUB SHEET NO. C8	TITLE OF DRAWING CIVIL STANTON CREEK ROAD STA 193+00 TO 205+00 GLEN CANYON NATIONAL RECREATION AREA	DRAWING NO. #XXX XXXXXX PMIS/PKG NO. 318882 SHEET 18 OF 45

NOT FOR CONSTRUCTION

2/27/2023 5:17:09 PM C:\pw_workdir\den003\ch2mhill_hmorton\d1482894\318882_C2_C18-PnP.dwg

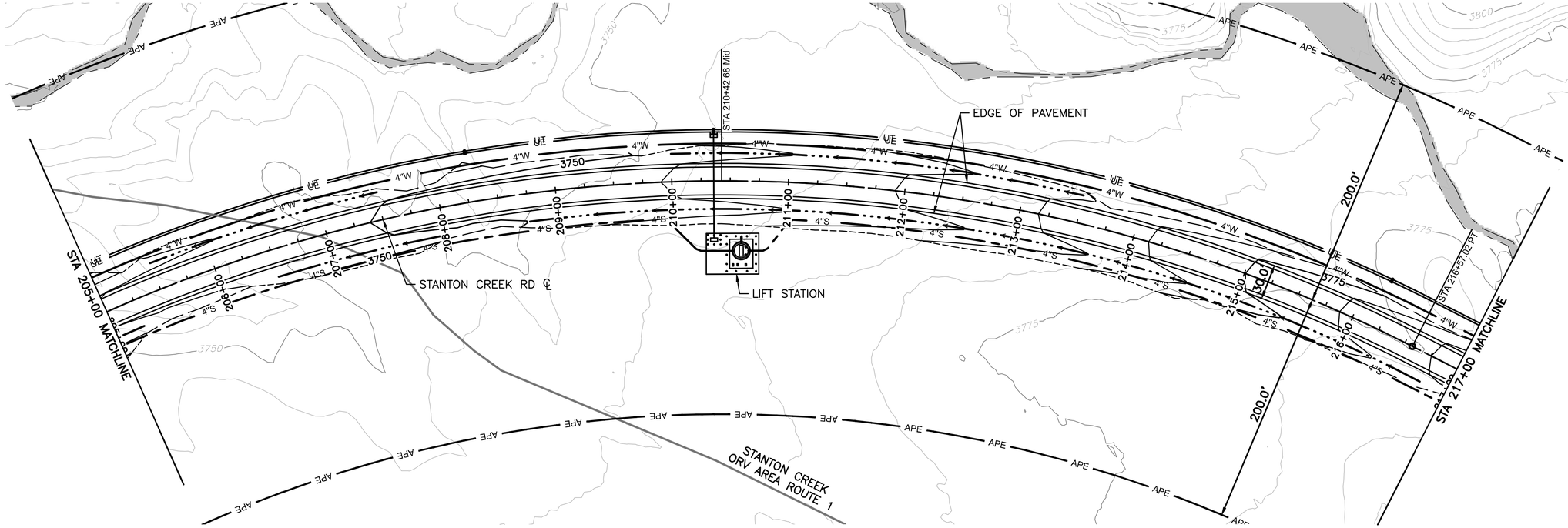

NOTE

1. CONTRACTOR TO VERIFY TYPE, SIZE, AND LOCATION OF CULVERT CROSSINGS.

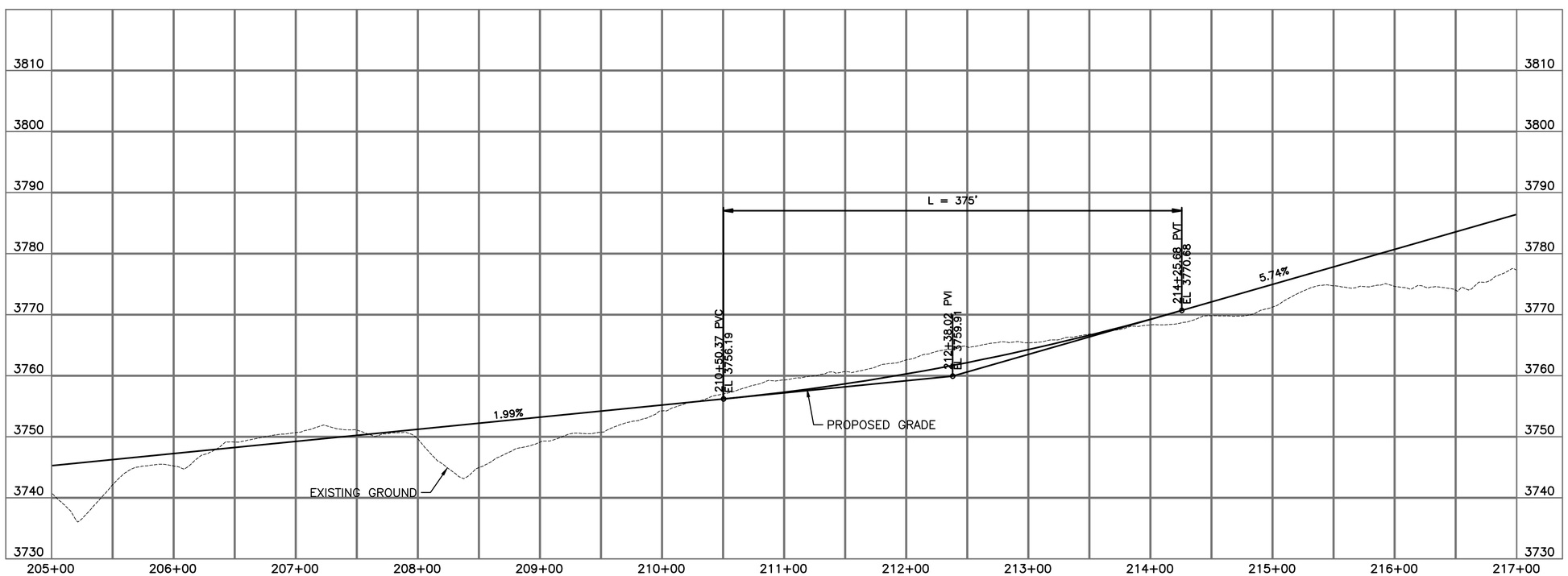

0 50 100 150
SCALE: 1" = 50'

LEGEND

- HIGH WATER LEVEL/FLOODPLAIN BOUNDARY 3700 FT
- APE — APE BOUNDARY
- WETLANDS
- CUT\FILL LINE
- DITCH FLOWLINE

DESIGNED: AR CADD: HM TECH. REVIEW: ---- DATE: 2/27/23	SUB SHEET NO. C9	TITLE OF DRAWING CIVIL STANTON CREEK ROAD STA 205+00 TO 217+00 GLEN CANYON NATIONAL RECREATION AREA	DRAWING NO. #XXX XXXXXX PMIS/PKG NO. 318882 SHEET 19 OF 45

NOT FOR CONSTRUCTION

2/27/2023 5:18:18 PM C:\pw_workdir\den003\ch2mhill_hmorton\d1482894\318882_C2_C18-PnP.dwg

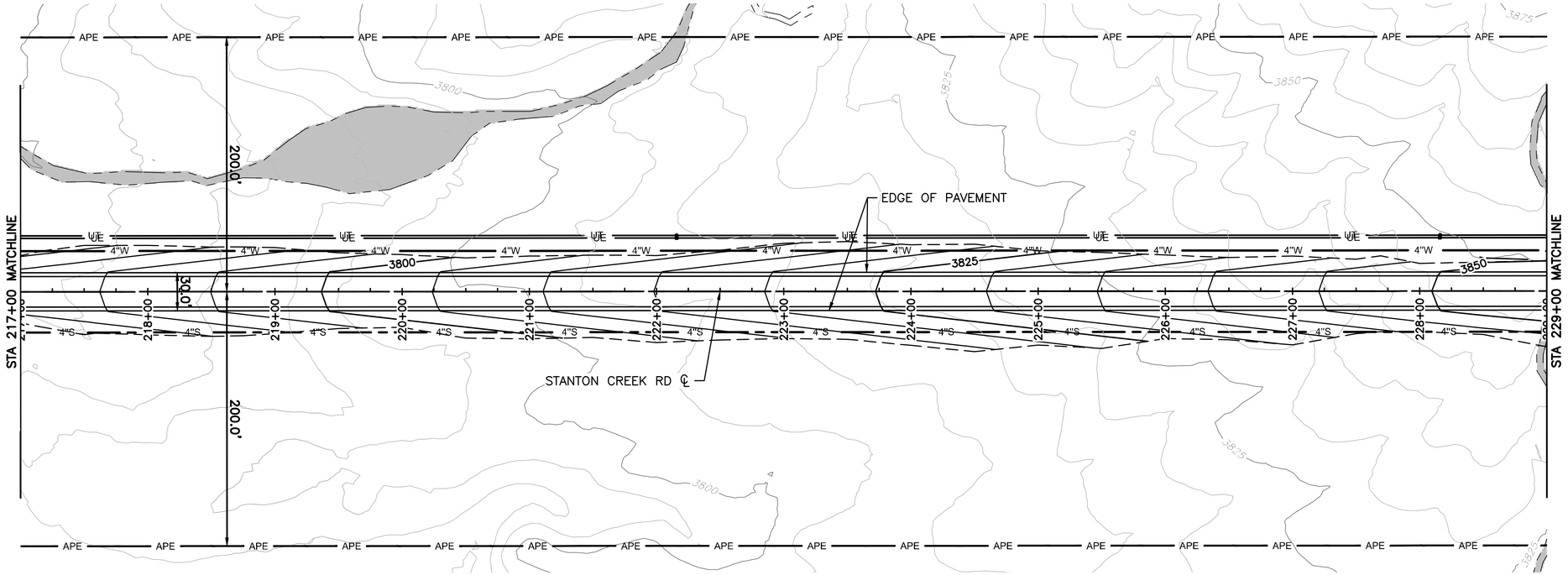

NOTE

1. CONTRACTOR TO VERIFY TYPE, SIZE, AND LOCATION OF CULVERT CROSSINGS.

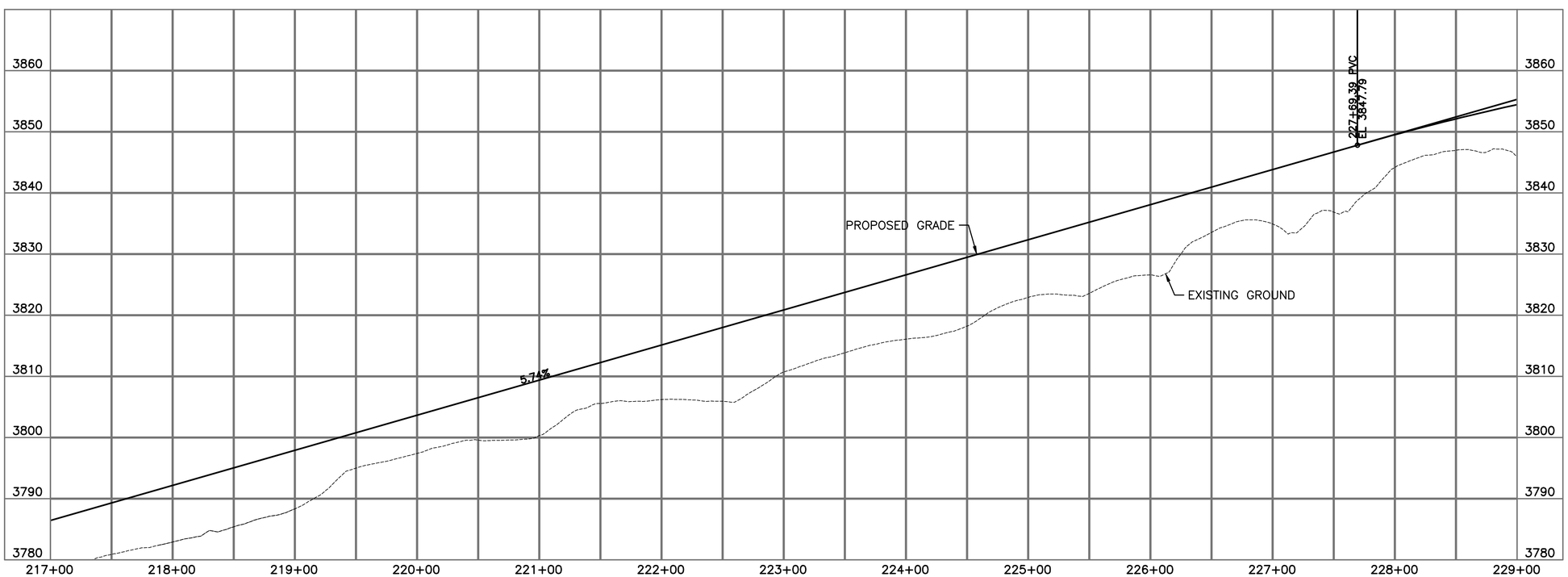

0 50 100 150
SCALE: 1" = 50'

LEGEND

- HIGH WATER LEVEL/FLOODPLAIN BOUNDARY 3700 FT
- APE — APE BOUNDARY
- WETLANDS
- CUT\FILL LINE
- DITCH FLOWLINE

DESIGNED: AR CADD: HM TECH. REVIEW: ---- DATE: 2/27/23	SUB SHEET NO. C10	TITLE OF DRAWING CIVIL STANTON CREEK ROAD STA 217+00 TO 229+00 GLEN CANYON NATIONAL RECREATION AREA	DRAWING NO. #XXX XXXXXX PMIS/PKG NO. 318882 SHEET 20 OF 45

NOT FOR CONSTRUCTION

2/27/2023 5:19:37 PM C:\pw_workdir\den003\ch2mhill_hmorton\d1482894\318882_C2_C18-PnP.dwg

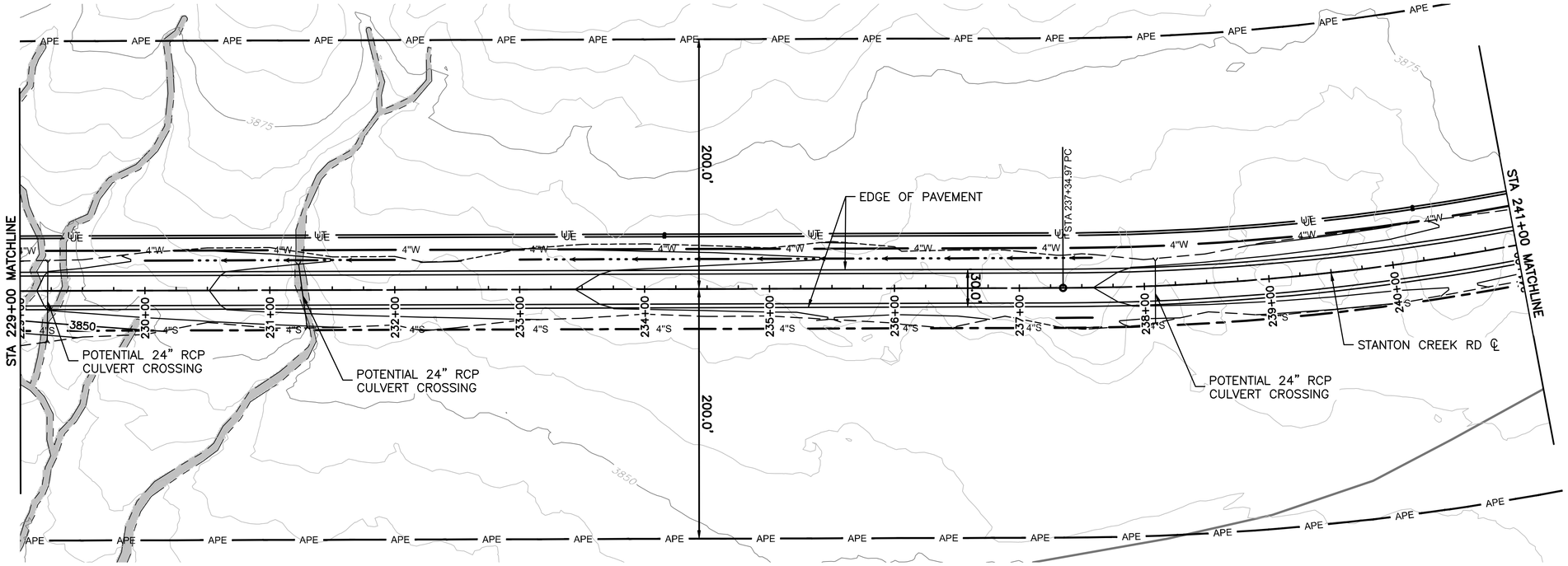

NOTE

1. CONTRACTOR TO VERIFY TYPE, SIZE, AND LOCATION OF CULVERT CROSSINGS.

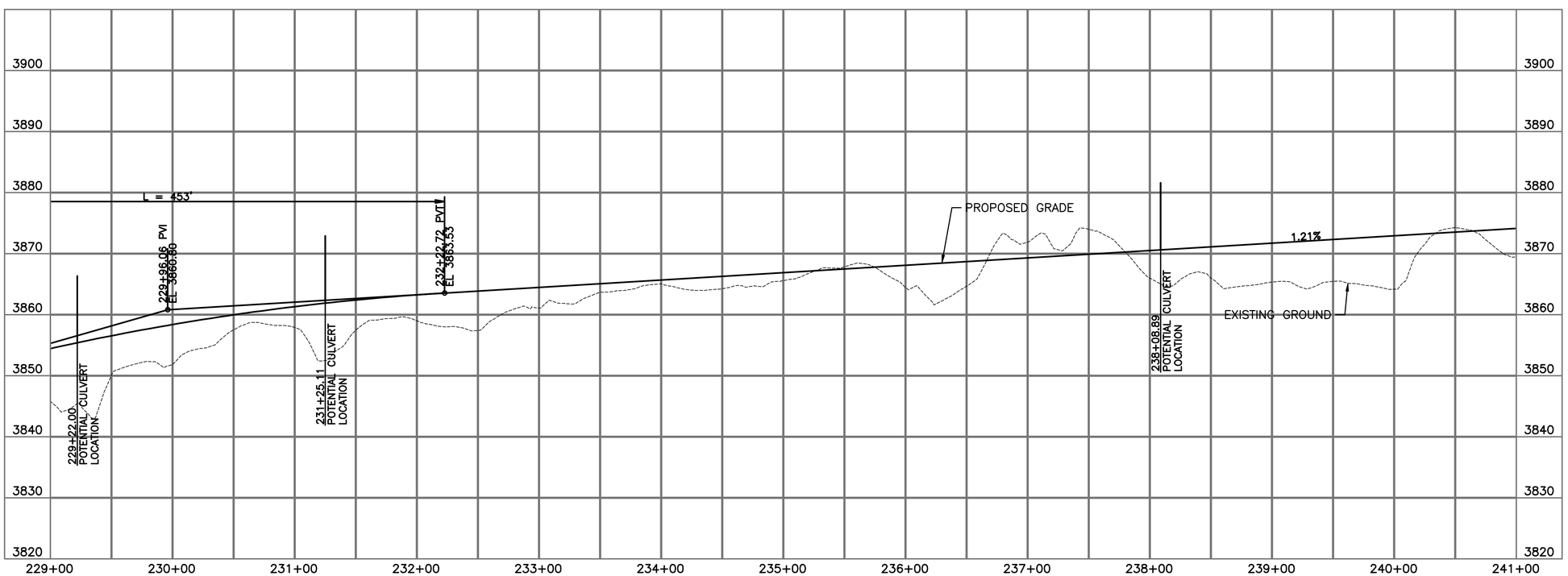

0 50 100 150
SCALE: 1" = 50'

LEGEND

- HIGH WATER LEVEL/FLOODPLAIN BOUNDARY 3700 FT
- APE — APE BOUNDARY
- WETLANDS
- CUT\FILL LINE
- DITCH FLOWLINE

DESIGNED: AR CADD: HM TECH. REVIEW: ---- DATE: 2/27/23	SUB SHEET NO. C11	TITLE OF DRAWING CIVIL STANTON CREEK ROAD STA 229+00 TO 241+00 GLEN CANYON NATIONAL RECREATION AREA	DRAWING NO. #XXX XXXXXX PMIS/PKG NO. 318882 SHEET 21 OF 45

NOT FOR CONSTRUCTION

2/27/2023 5:20:54 PM C:\pw_workdir\den003\ch2mhill_hmorton\d1482894\318882_C2_C18-PnP.dwg

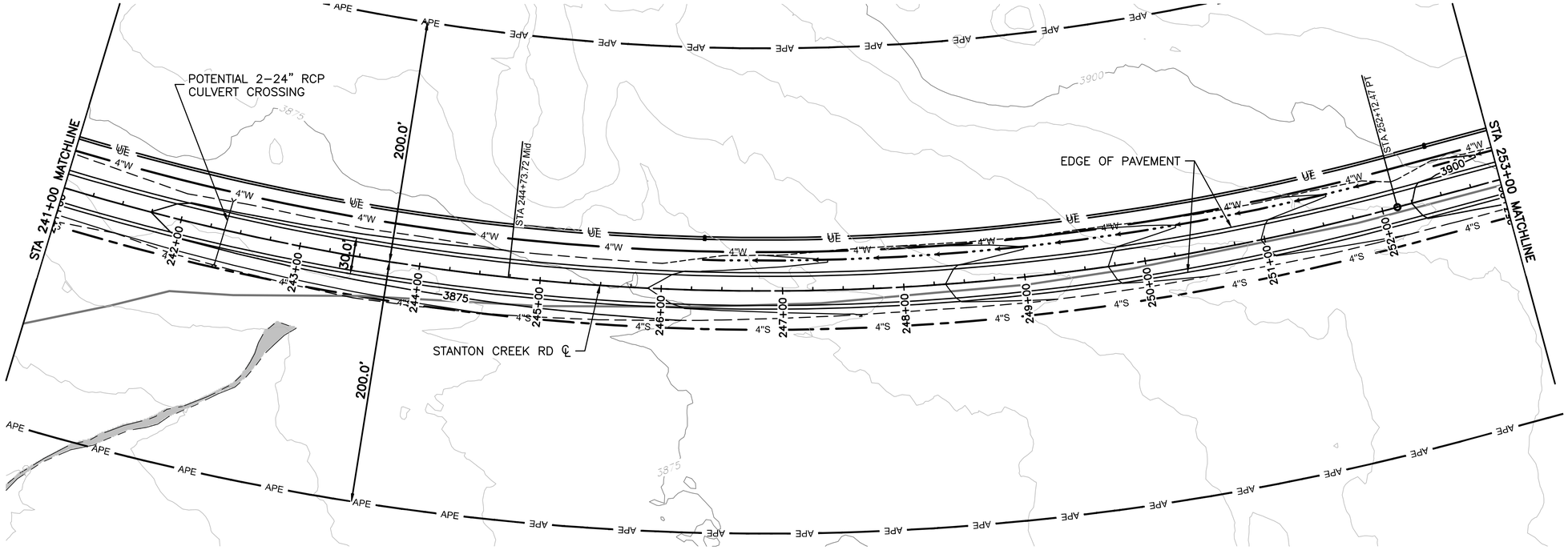

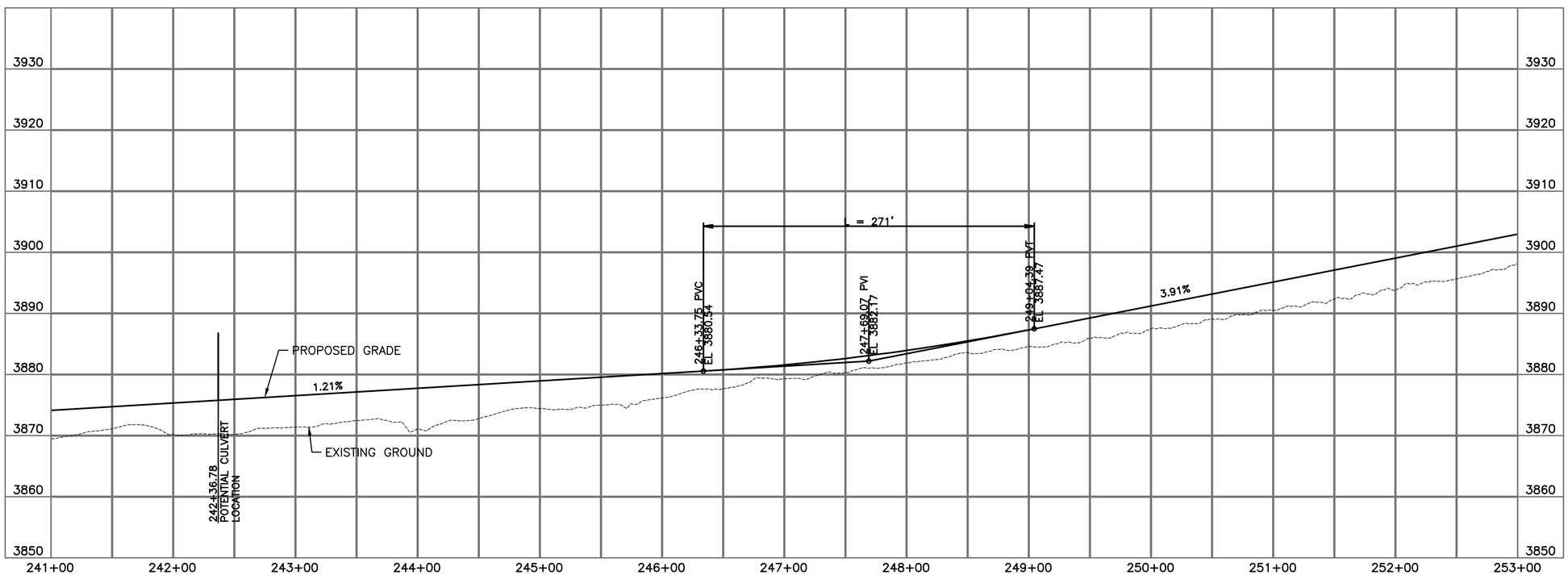

NOTE

1. CONTRACTOR TO VERIFY TYPE, SIZE, AND LOCATION OF CULVERT CROSSINGS.

0 50 100 150
SCALE: 1" = 50'

LEGEND

- HIGH WATER LEVEL/FLOODPLAIN BOUNDARY 3700 FT
- APE — APE BOUNDARY
- WETLANDS
- CUT\FILL LINE
- DITCH FLOWLINE

DESIGNED: AR CADD: HM TECH. REVIEW: ---- DATE: 2/27/23	SUB SHEET NO. C12	TITLE OF DRAWING CIVIL STANTON CREEK ROAD STA 241+00 TO 253+00 GLEN CANYON NATIONAL RECREATION AREA	DRAWING NO. #XXX XXXXXX PMIS/PKG NO. 318882 SHEET 22 OF 45

NOT FOR CONSTRUCTION

2/27/2023 5:21:55 PM C:\pw_workdir\den003\ch2mhill_hmorton\d1482894\318882_C2_C18-PnP.dwg

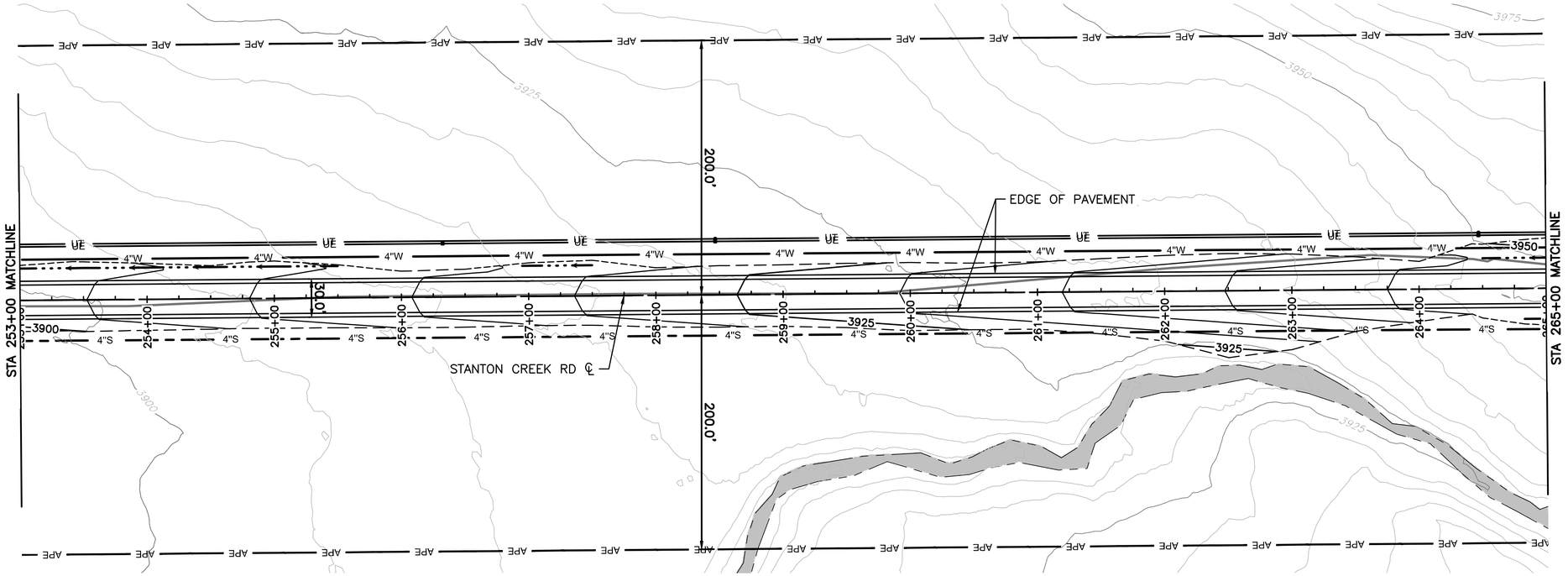

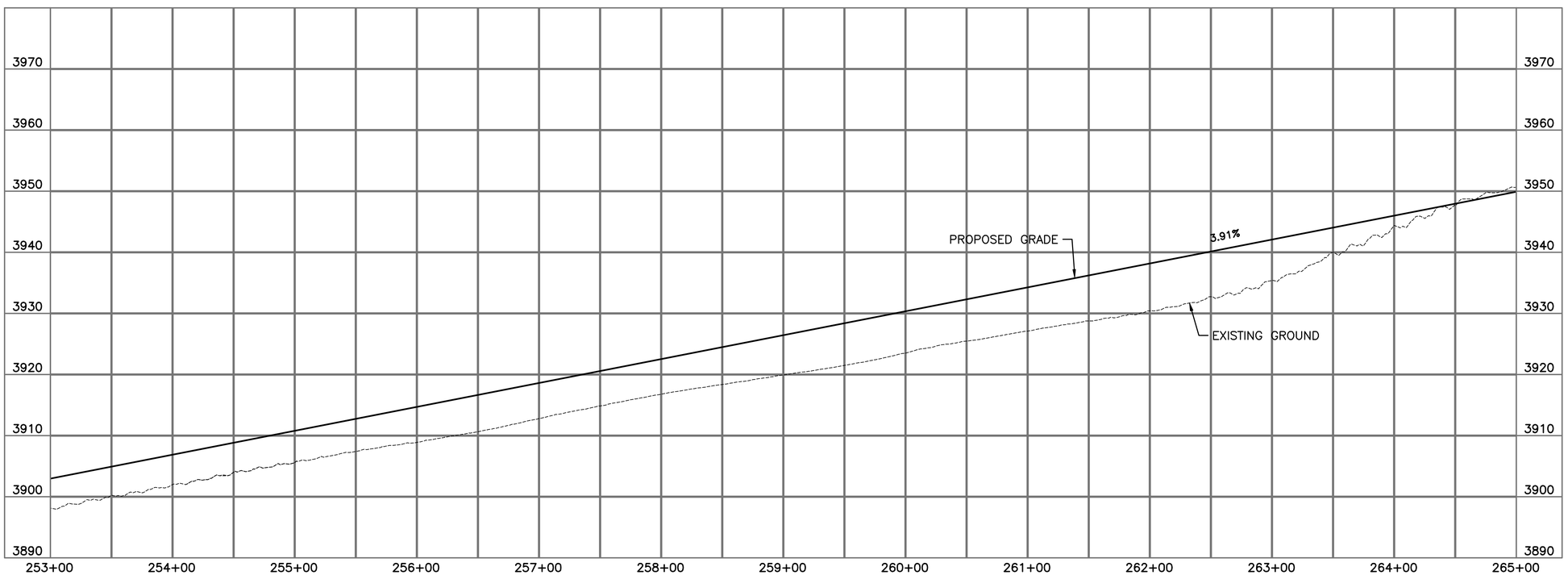

NOTE

1. CONTRACTOR TO VERIFY TYPE, SIZE, AND LOCATION OF CULVERT CROSSINGS.

0 50 100 150
SCALE: 1" = 50'

LEGEND

- HIGH WATER LEVEL/FLOODPLAIN BOUNDARY 3700 FT
- APE — APE BOUNDARY
- WETLANDS
- CUT\FILL LINE
- DITCH FLOWLINE

DESIGNED: AR CADD: HM TECH. REVIEW: ---- DATE: 2/27/23	SUB SHEET NO. C13	TITLE OF DRAWING CIVIL STANTON CREEK ROAD STA 253+00 TO 265+00 GLEN CANYON NATIONAL RECREATION AREA	DRAWING NO. #XXX XXXXXX PMIS/PKG NO. 318882 SHEET 23 OF 45

NOT FOR CONSTRUCTION

2/27/2023 5:22:51 PM C:\pw_workdir\den003\ch2mhill_hmorton\d1482894\318882_C2_C18-PnP.dwg

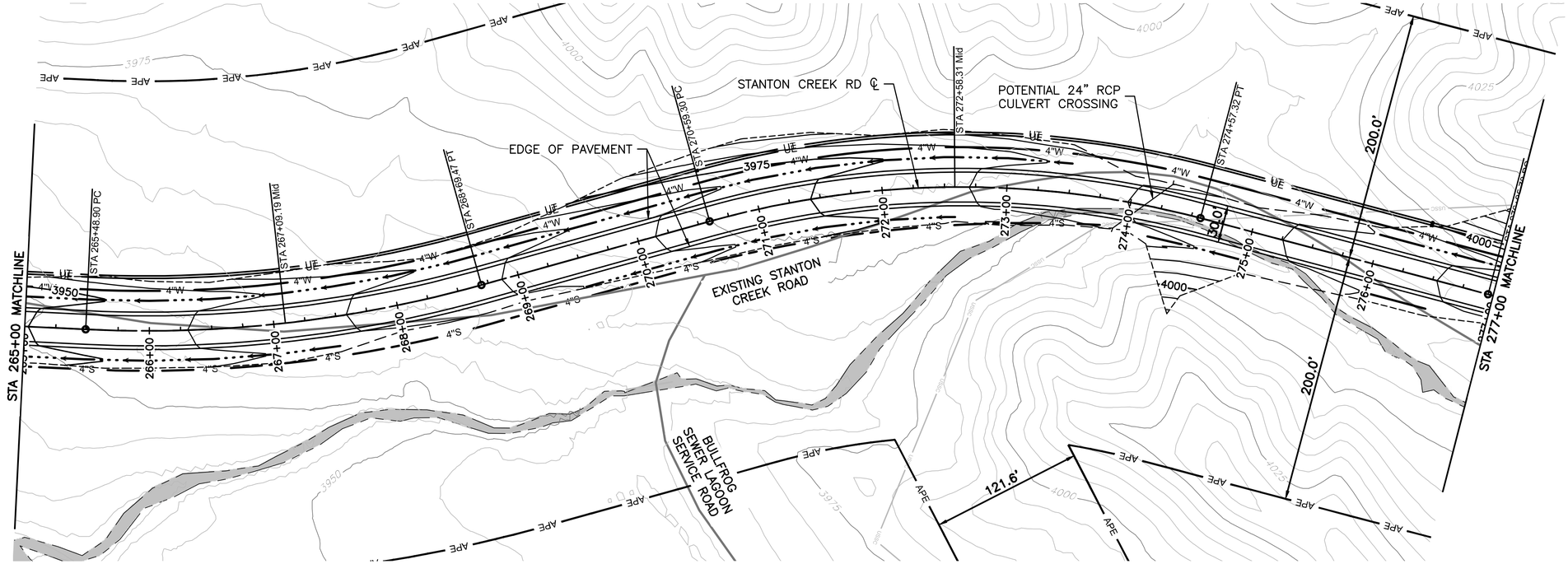

NOTE

1. CONTRACTOR TO VERIFY TYPE, SIZE, AND LOCATION OF CULVERT CROSSINGS.

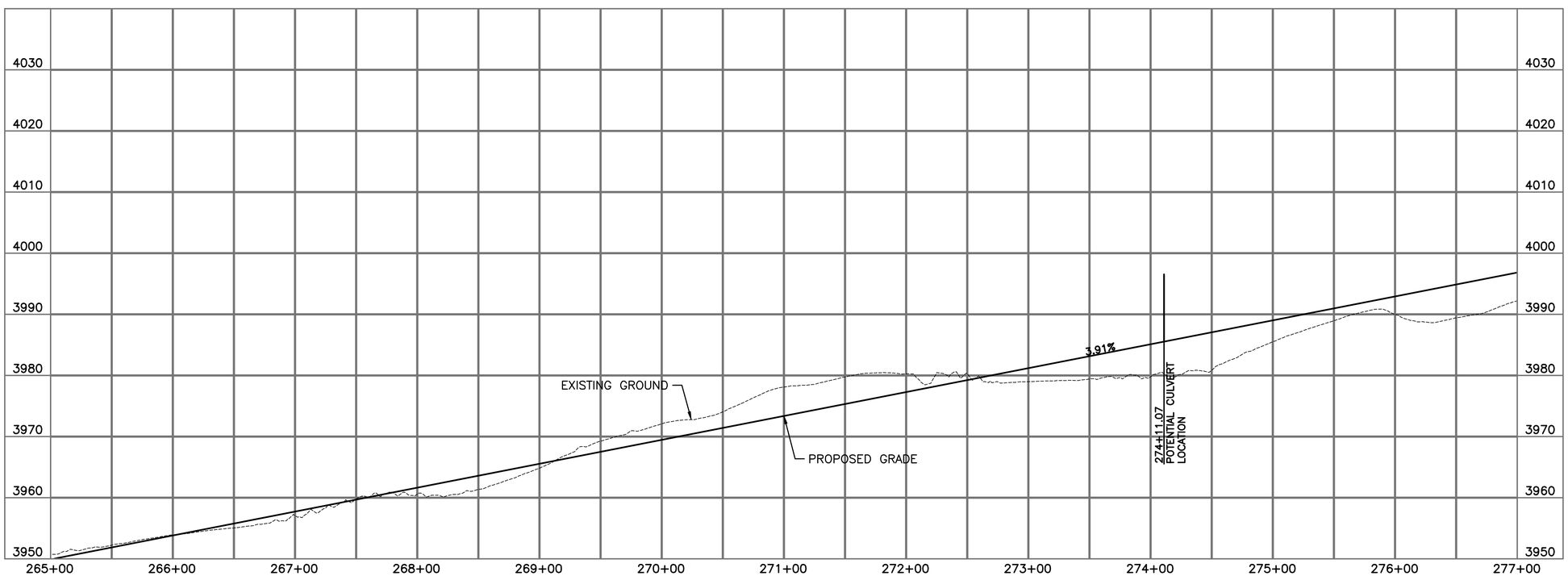

0 50 100 150
SCALE: 1" = 50'

LEGEND

- HIGH WATER LEVEL/FLOODPLAIN BOUNDARY 3700 FT
- APE — APE BOUNDARY
- WETLANDS
- CUT\FILL LINE
- DITCH FLOWLINE

DESIGNED: AR	SUB SHEET NO.	TITLE OF DRAWING	DRAWING NO.
CADD: HM	C14	CIVIL STANTON CREEK ROAD STA 265+00 TO 277+00	#XXX XXXXXX
TECH. REVIEW: ----			PMIS/PKG NO. 318882
DATE: 2/27/23		GLEN CANYON NATIONAL RECREATION AREA	SHEET 24 OF 45

NOT FOR CONSTRUCTION

2/27/2023 5:23:40 PM C:\pw_workdir\den003\ch2mhill_hmorton\d1482894\318882_C2_C18-PnP.dwg

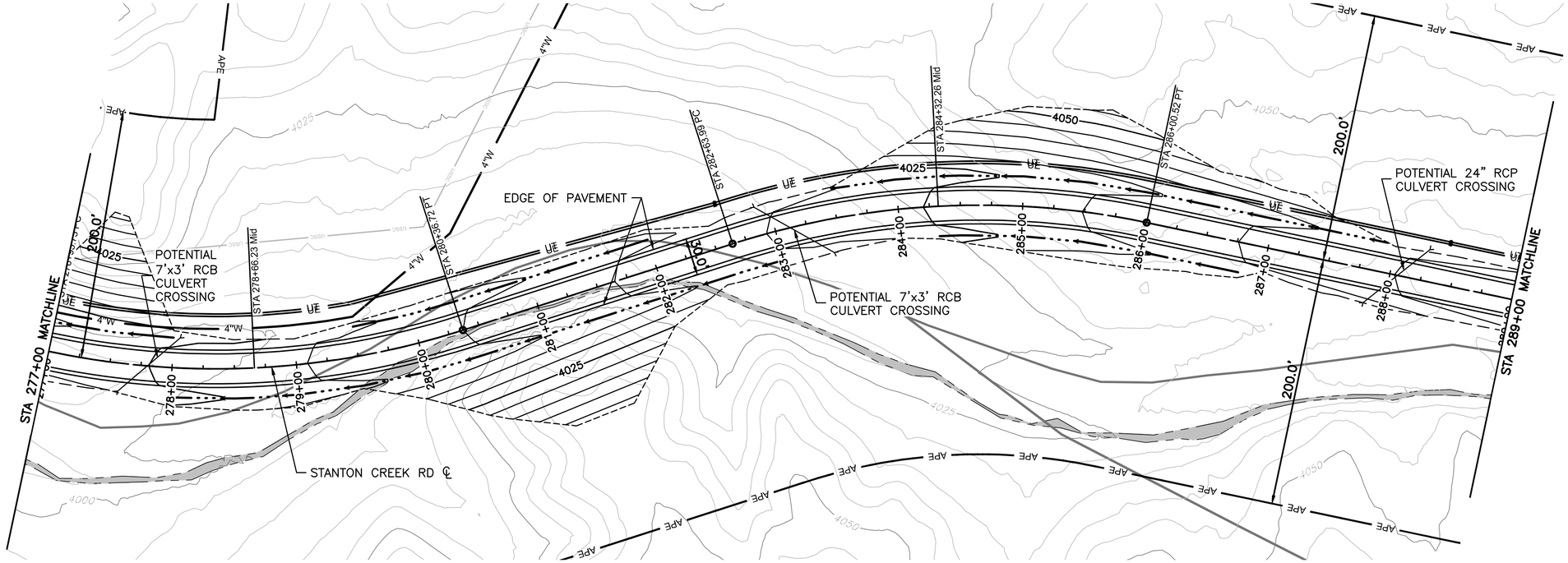

NOTE

1. CONTRACTOR TO VERIFY TYPE, SIZE, AND LOCATION OF CULVERT CROSSINGS.

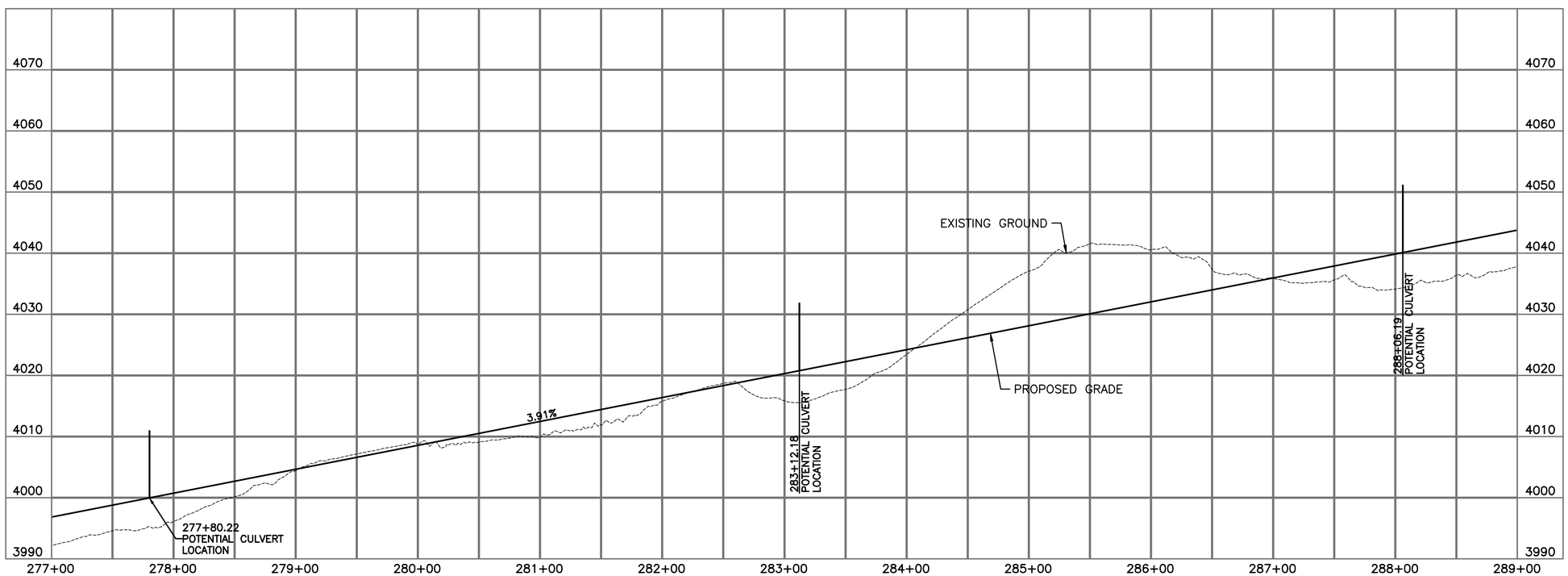

0 50 100 150
SCALE: 1" = 50'

LEGEND

- HIGH WATER LEVEL/FLOODPLAIN BOUNDARY 3700 FT
- APE — APE BOUNDARY
- WETLANDS
- CUT\FILL LINE
- DITCH FLOWLINE

DESIGNED: AR CADD: HM TECH. REVIEW: ---- DATE: 2/27/23	SUB SHEET NO. C15	TITLE OF DRAWING CIVIL STANTON CREEK ROAD STA 277+00 TO 289+00 GLEN CANYON NATIONAL RECREATION AREA	DRAWING NO. #XXX XXXXXX PMIS/PKG NO. 318882 SHEET 25 OF 45

NOT FOR CONSTRUCTION

2/27/2023 5:24:23 PM C:\pw_workdir\den003\ch2mhill_hmorton\d1482894\318882_C2_C18-PnP.dwg

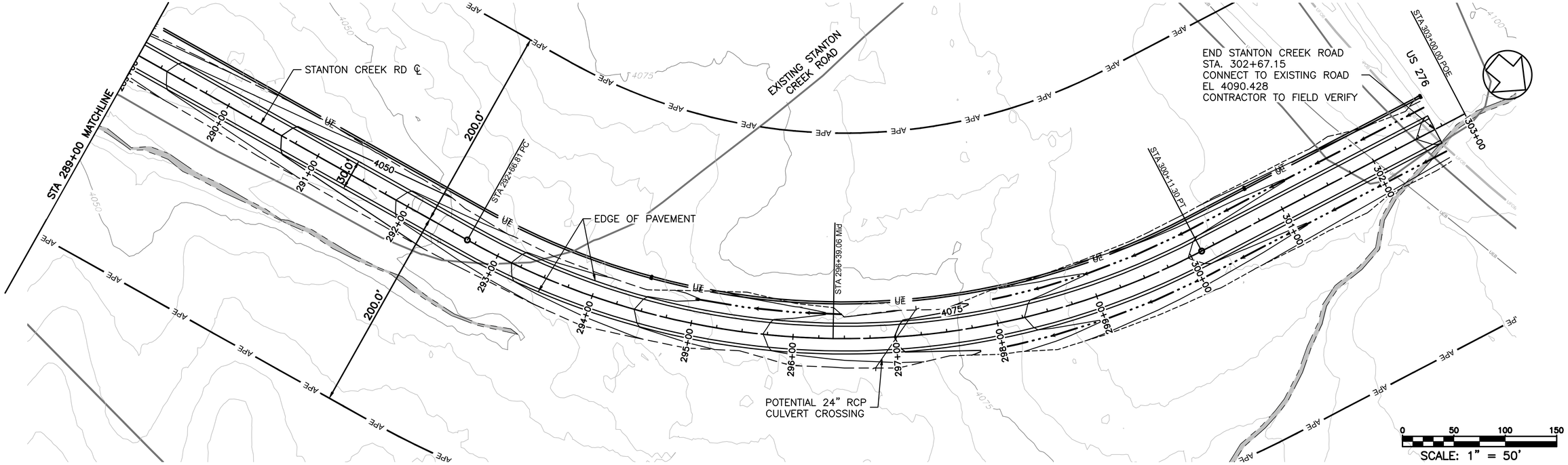

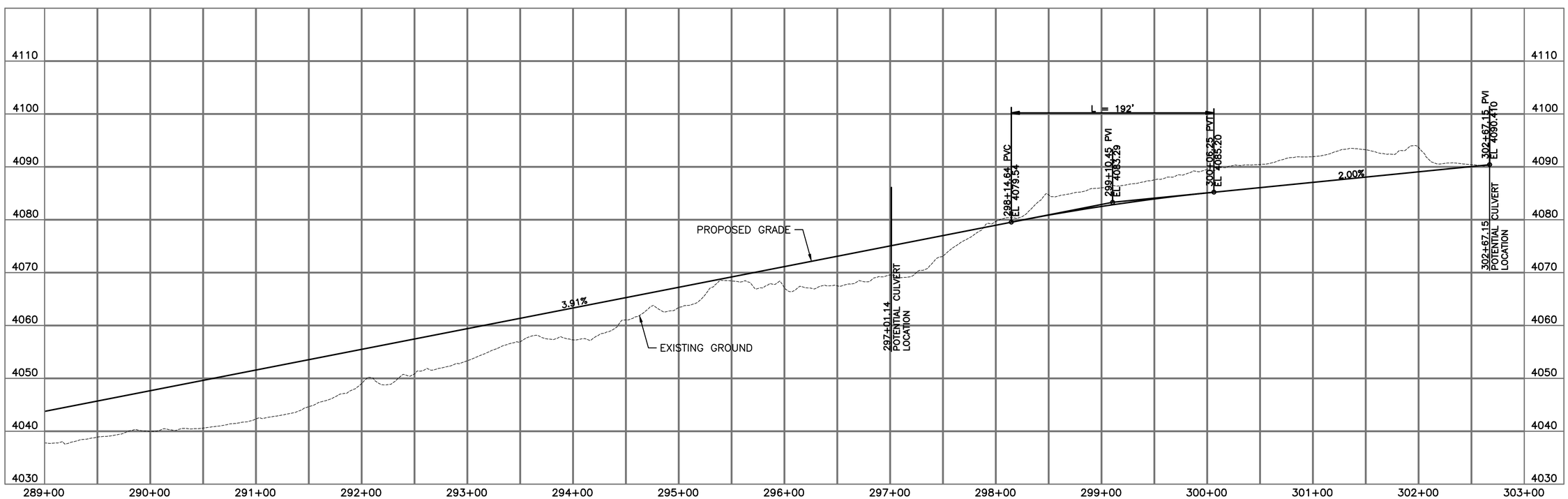

LEGEND

- HIGH WATER LEVEL/FLOODPLAIN BOUNDARY 3700 FT
- APE — APE BOUNDARY
- WETLANDS
- CUT\FILL LINE
- DITCH FLOWLINE

NOTE

1. CONTRACTOR TO VERIFY TYPE, SIZE, AND LOCATION OF CULVERT CROSSINGS.

DESIGNED: AR	SUB SHEET NO.	TITLE OF DRAWING	DRAWING NO.
CADD: HM	C16	CIVIL	#XXX XXXXXX
TECH. REVIEW: ----		STANTON CREEK ROAD STA 289+00 TO 302+67.15	PMIS/PKG NO. 318882
DATE: 2/27/23		GLEN CANYON NATIONAL RECREATION AREA	SHEET 26 OF 45

NOT FOR CONSTRUCTION

2/27/2023 6:23:25 PM C:\pw_workdir\den003\ch2mhill_hmorton\d1482894\318882_C2_C18-PnP.dwg

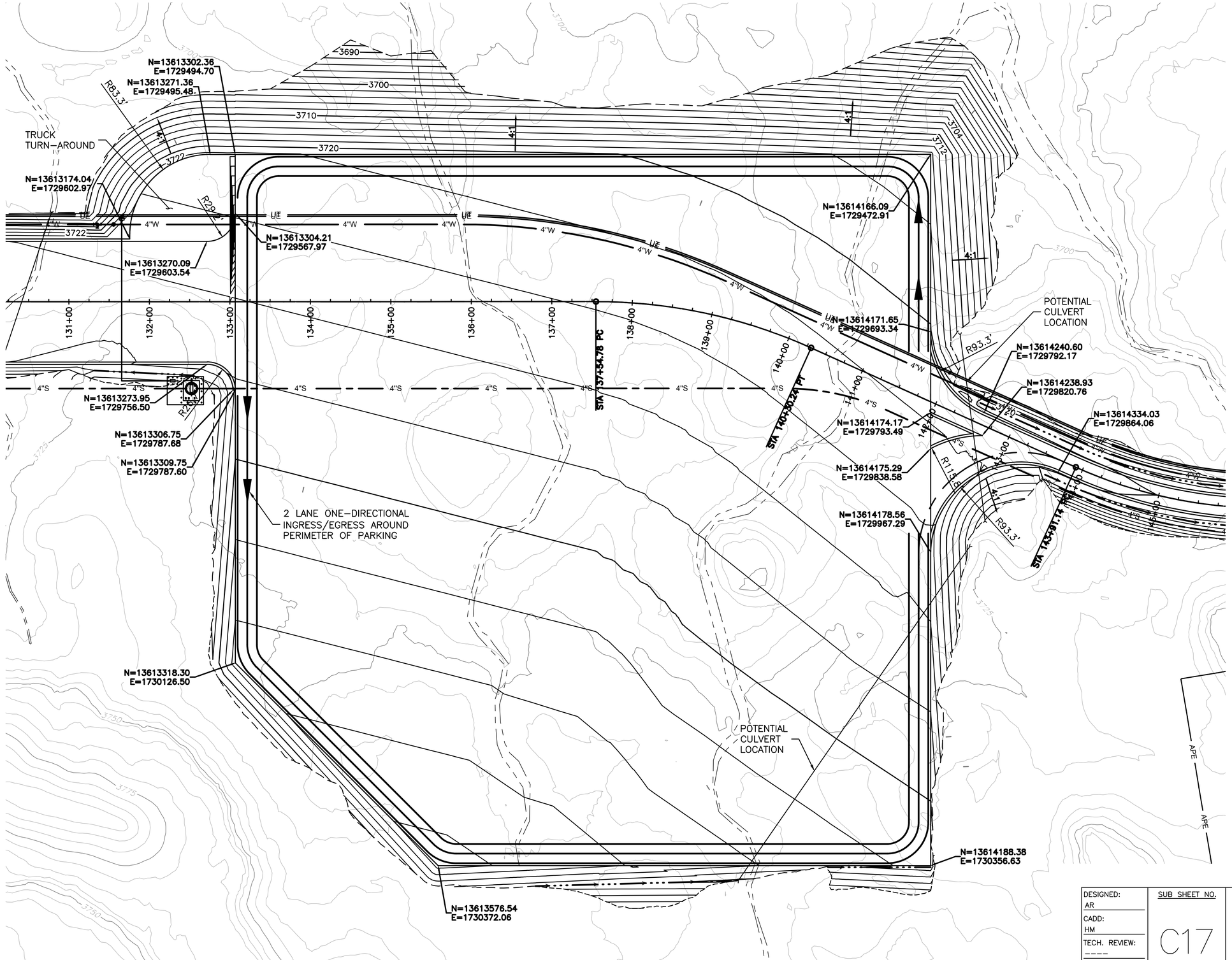

0 60 120 180

SCALE: 1" = 60'

DESIGNED: AR	SUB SHEET NO.	TITLE OF DRAWING CIVIL	DRAWING NO. #XXX XXXXXX
CADD: HM	C17	PARKING AREA PLAN	PMIS/PKG NO. 318882
TECH. REVIEW: ----			SHEET
DATE: 1/19/23		GLEN CANYON NATIONAL RECREATION AREA	27 OF 45

NOT FOR CONSTRUCTION

1/19/2023 4:36:10 AM C:\pw_workdir\den003\ch2mhill_hmorton\d1482894\318882_C19-Pln.dwg

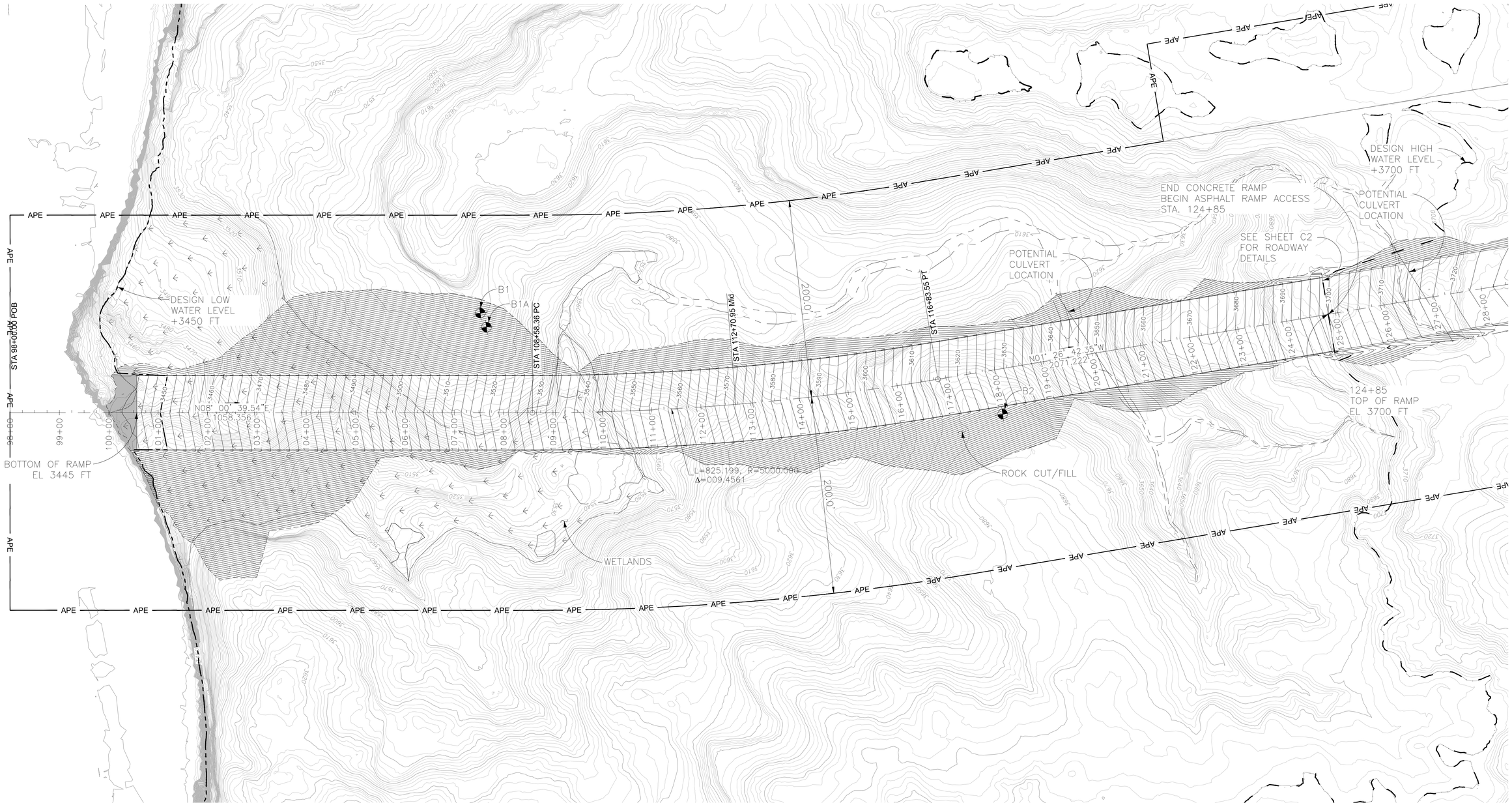

LEGEND

- ROCK CUT/FILL BOUNDARY
- 3580 EXISTING ELEVATION
- 3550 ELEVATION
- DESIGN LOW WATER LEVEL +3450 FT
- DESIGN HIGH WATER LEVEL +3700 FT
- BORING LOCATION
- APE AREA OF POTENTIAL EFFECTS
- WETLANDS

TRUE NORTH
PROJECT NORTH

100 0 100 200
SCALE OF FEET

DESIGNED: JG/JM CADD: HM TECH. REVIEW: ER DATE: 3/20/23	SUB SHEET NO. S1	TITLE OF DRAWING STRUCTURAL LAUNCH RAMP PLAN GLEN CANYON NATIONAL RECREATION AREA	DRAWING NO. #XXX XXXXXX PMIS/PKG NO. 318882 SHEET 28 OF 45

NOT FOR CONSTRUCTION

3/20/2023 8:52:39 PM C:\pw_workdir\den003\ch2mhill_hmorton\d1482900\318882_S1_PnP.dwg

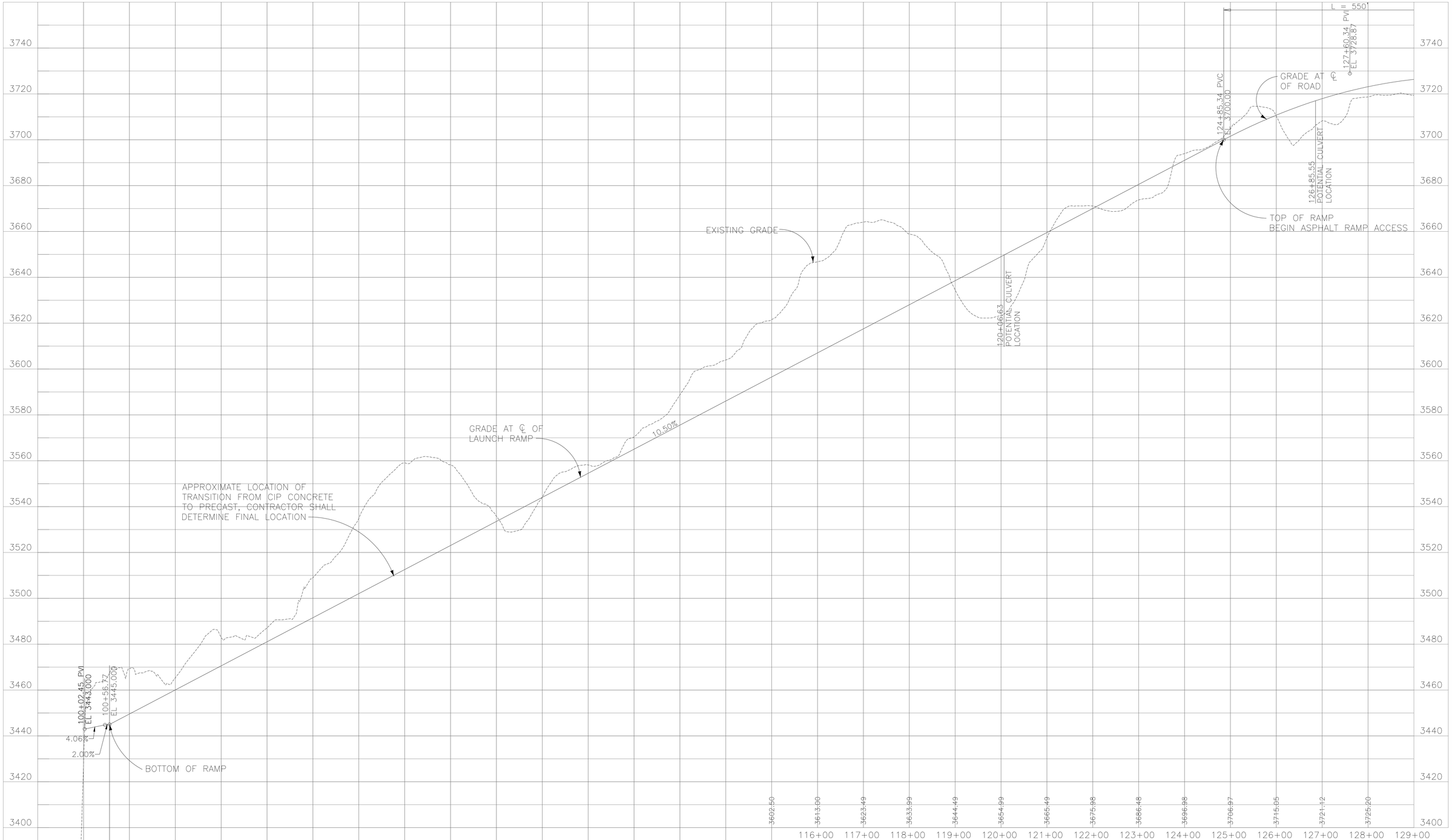

20 0 20 40 VERTICAL
SCALE OF FEET

100 0 100 200
SCALE OF FEET

DESIGNED: JG/JM	SUB SHEET NO.	TITLE OF DRAWING STRUCTURAL LAUNCH RAMP PROFILE	DRAWING NO. #XXX XXXXXX
CADD: HM	S2		PMIS/PKG NO. 318882
TECH. REVIEW: ER			SHEET 29 OF 45
DATE: 3/20/23		GLEN CANYON NATIONAL RECREATION AREA	

NOT FOR CONSTRUCTION

3/20/2023 7:50:53 PM C:\pw_workdir\den003\ch2mhill_hmorton\d1482900\318882_S1_PnP.dwg

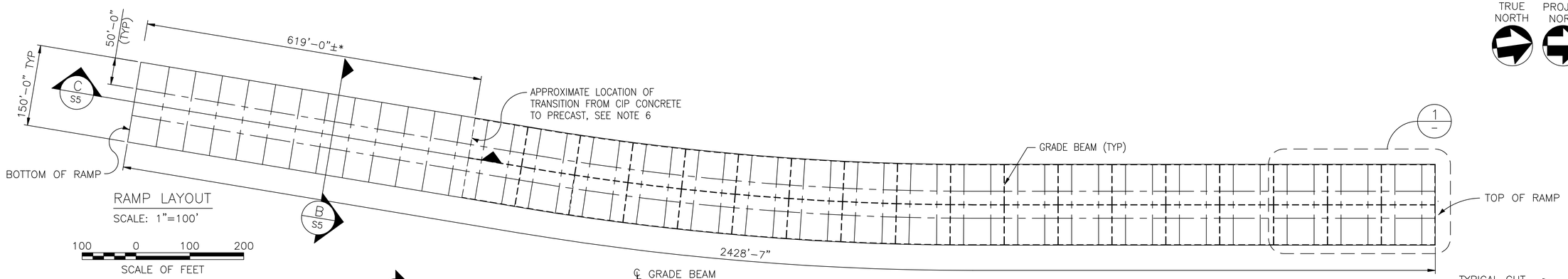

RAMP LAYOUT

SCALE: 1"=100'

100 0 100 200

SCALE OF FEET

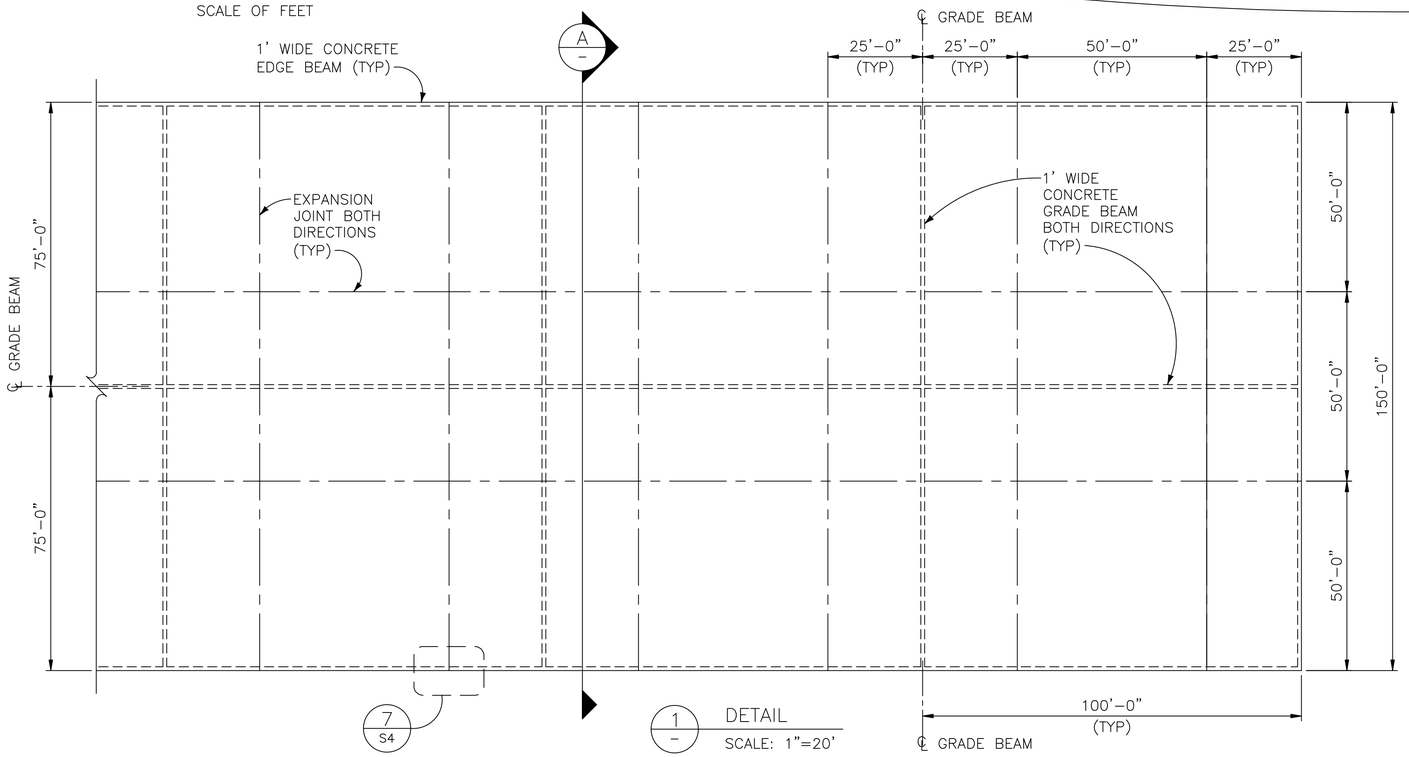

1 DETAIL

SCALE: 1"=20'

20 0 20 40

SCALE OF FEET

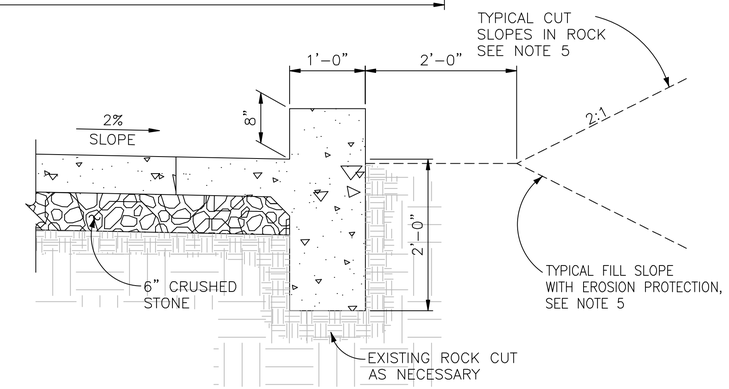

2 DETAIL

SCALE: 1"=1'-0"

NOTE:
SIMILAR AT PRECAST SEGMENT OF RAMP

1 0 1 2

SCALE OF FEET

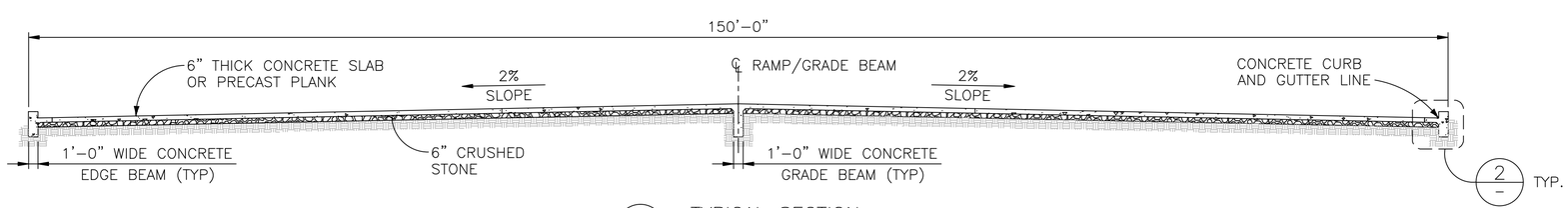

A TYPICAL SECTION

SCALE: 1/8"=1'-0"

8 0 8 16

SCALE OF FEET

NOTES

1. THE RAMP LENGTH IS BASED ON A SLOPE OF 10.5%.
2. TOP OF RAMP IS 3700 FEET AND BOTTOM OF RAMP 3445 FEET.
3. RAMP TOE ELEVATION OF +3445 FEET IS 5 FEET BELOW DESIGN LOW WATER (DLW).
4. CONTROL JOINTS SHALL BE PLACED EVERY 10 FEET O.C. IN BOTH DIRECTIONS.
5. TYPICAL CUT/FILL SLOPES ARE BASED ON PRELIMINARY STUDY, CONTRACTOR IS RESPONSIBLE FOR ANALYZING BORING INFORMATION AND DETERMINING FINAL ROCK CUT SLOPE STABILIZATION. SEE DETAILS 1 AND 5 ON SHEET S4.
6. CONTRACTOR SHALL FINALIZE TRANSITION FROM CIP TO PRECAST BASED ON WATER ELEVATION AT TIME OF CONSTRUCTION. (ASSUMED 3510)

DESIGNED: JG/JM CADD: HM TECH. REVIEW: ER DATE: 1/20/23	SUB SHEET NO. S3	TITLE OF DRAWING STRUCTURAL LAUNCH RAMP LAYOUT AND SECTION GLEN CANYON NATIONAL RECREATION AREA	DRAWING NO. #XXX XXXXXX PMIS/PKG NO. 318882 SHEET 30 OF 45

NOT FOR CONSTRUCTION

1/20/2023 8:28:27 PM C:\pw_workdir\den003\ch2mhill_hmorton\d1482900\318882_S3_LAYOUT.dwg

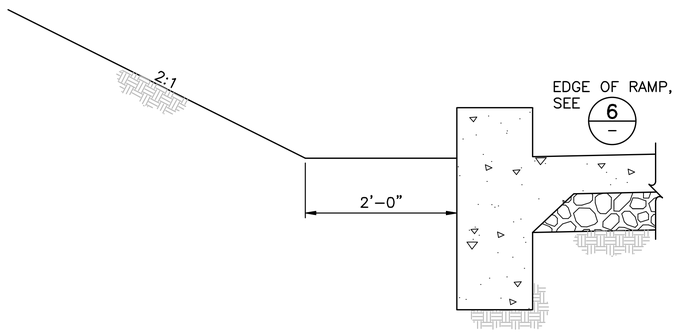

1/S3 DETAIL OF ROCK DITCH
NTS

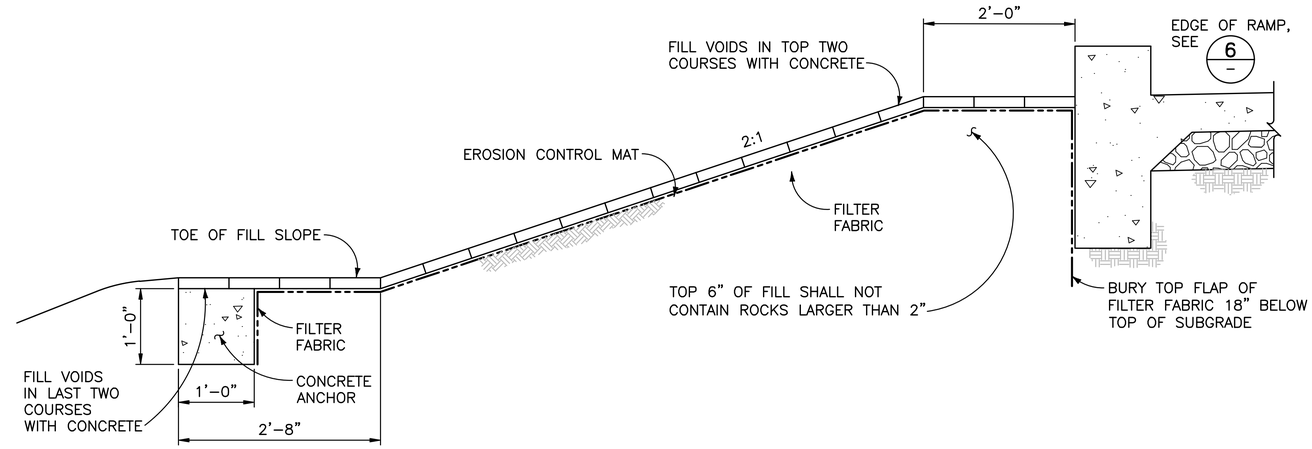

5/S3 DETAIL OF EROSION CONTROL MAT INSTALLATION
NTS

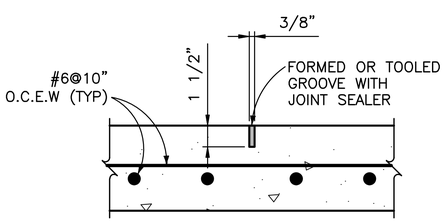

2/– CONTRACTION JOINT DETAIL TRANSVERSE AND LONGITUDINAL
NTS

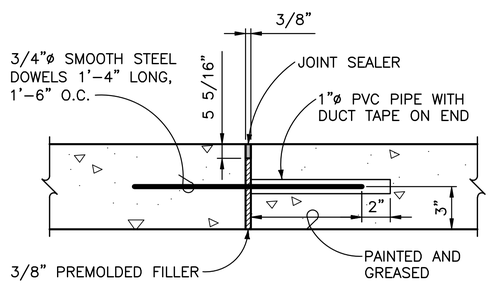

3/– EXPANSION JOINT DETAIL TRANSVERSE AND LONGITUDINAL
NTS

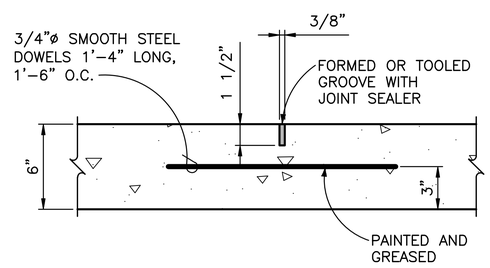

4/– CONSTRUCTION JOINT DETAIL TRANSVERSE AND LONGITUDINAL
NTS

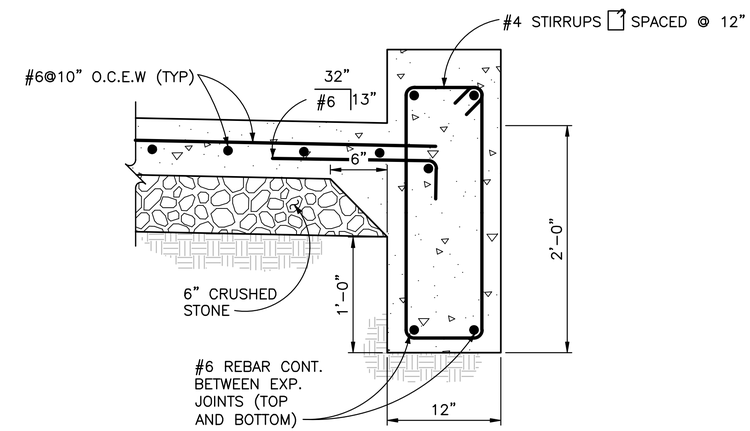

6/– SIDES AND BOTTOM OF RAMP
NTS

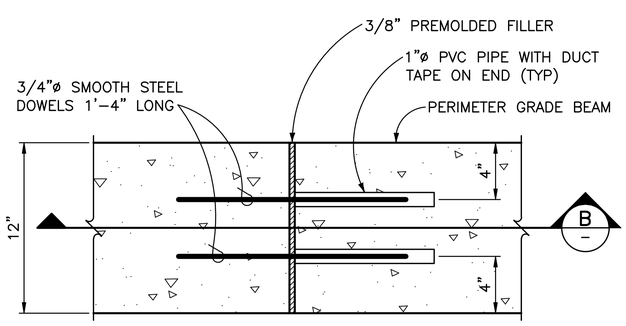

7/S3 EXPANSION JOINT BETWEEN THE PERIMETER BEAMS – PLAN VIEW
NTS

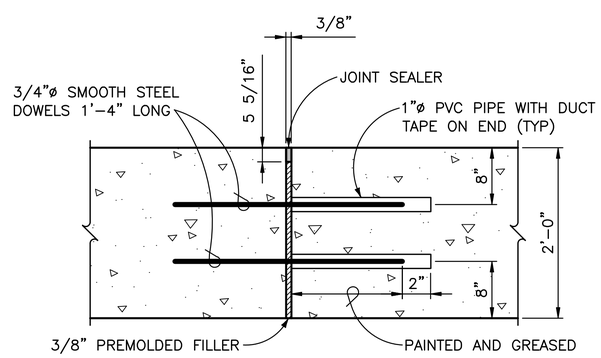

B/– SECTION
NTS

DESIGNED: JM/JG CADD: HM TECH. REVIEW: ER DATE: 1/20/23	SUB SHEET NO. S4	TITLE OF DRAWING STRUCTURAL LAUNCH RAMP DETAILS CAST IN PLACE GLEN CANYON NATIONAL RECREATION AREA	DRAWING NO. #XXX XXXXXX PMIS/PKG NO. 318882 SHEET 31 OF 45

NOT FOR CONSTRUCTION

1/20/2023 12:43:18 PM C:\pw_workdir\den003\ch2mhill_hmorton\d1482900\318882_S4_DETAILS.dwg

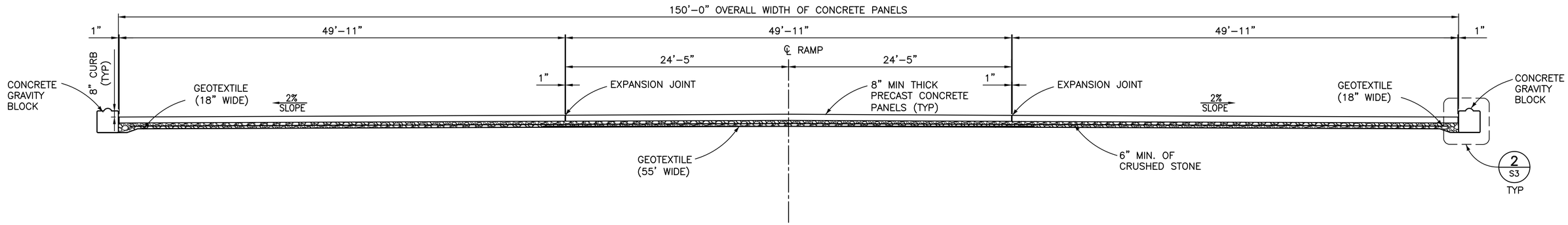

B S3 RAMP SECTION FOR PRECAST PANELS

NTS

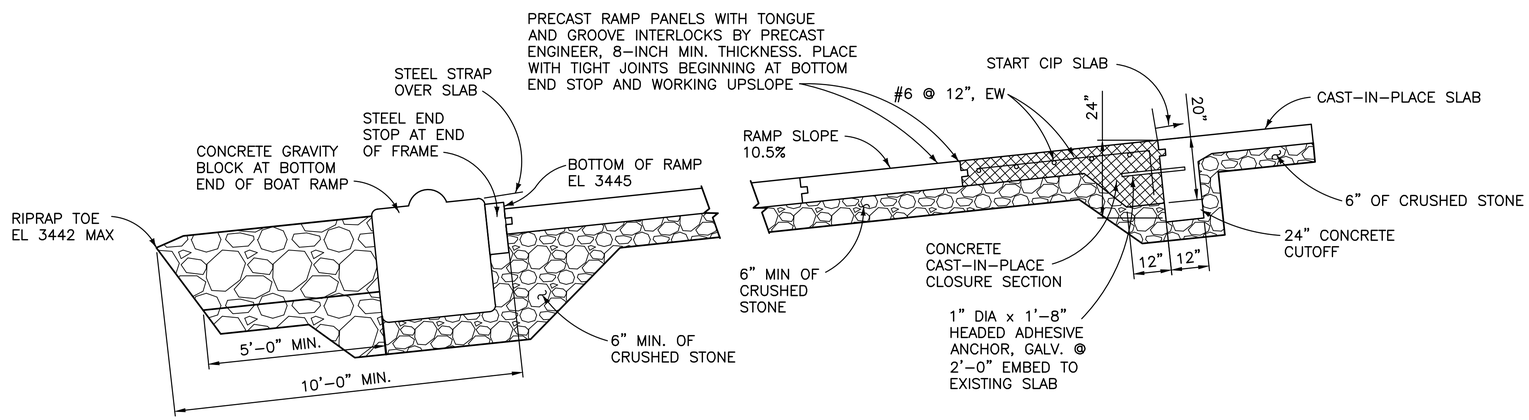

C S3 PRECAST RAMP TRANSITION DETAILS

NTS

DESIGNED: JM/JG	SUB SHEET NO.	TITLE OF DRAWING STRUCTURAL	DRAWING NO. #XXX XXXXXX
CADD: HM	S5	LAUNCH RAMP DETAILS PRECAST	PMIS/PKG NO. 318882
TECH. REVIEW: ER			SHEET
DATE: 1/19/23		GLEN CANYON NATIONAL RECREATION AREA	32 OF 45

NOT FOR CONSTRUCTION

1/19/2023 6:30:39 AM C:\pw_workdir\den003\ch2mhill_hmorton\d1482900\318882_S5_DETAILS.dwg

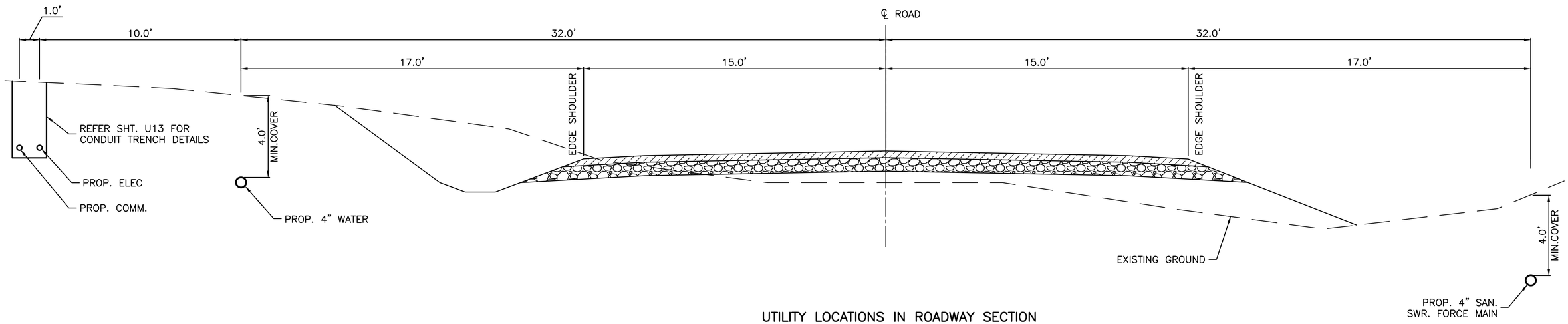

UTILITY LOCATIONS IN ROADWAY SECTION

NO SCALE

NOTES

1. SEE SHEET U12 FOR WATER AND SANITARY SEWER FORCE MAIN TRENCH DETAIL.

2. SEE SHEET U13 FOR ELECTRICAL AND COMMUNICATION TRENCH DETAIL.

DESIGNED: JF CADD: GNB TECH. REVIEW: RVW DATE: 1/19/23	SUB SHEET NO. U1	TITLE OF DRAWING UTILITIES UTILITY ROADWAY SECTION GLEN CANYON NATIONAL RECREATION AREA	DRAWING NO. #XXX XXXXXX PMIS/PKG NO. 318882 SHEET 33 OF 45

NOT FOR CONSTRUCTION

1/19/2023 9:21:52 AM C:\pw_workdir\den003\jeg_ballg\d1482901\318882_U1_U11-U13-Det.dwg

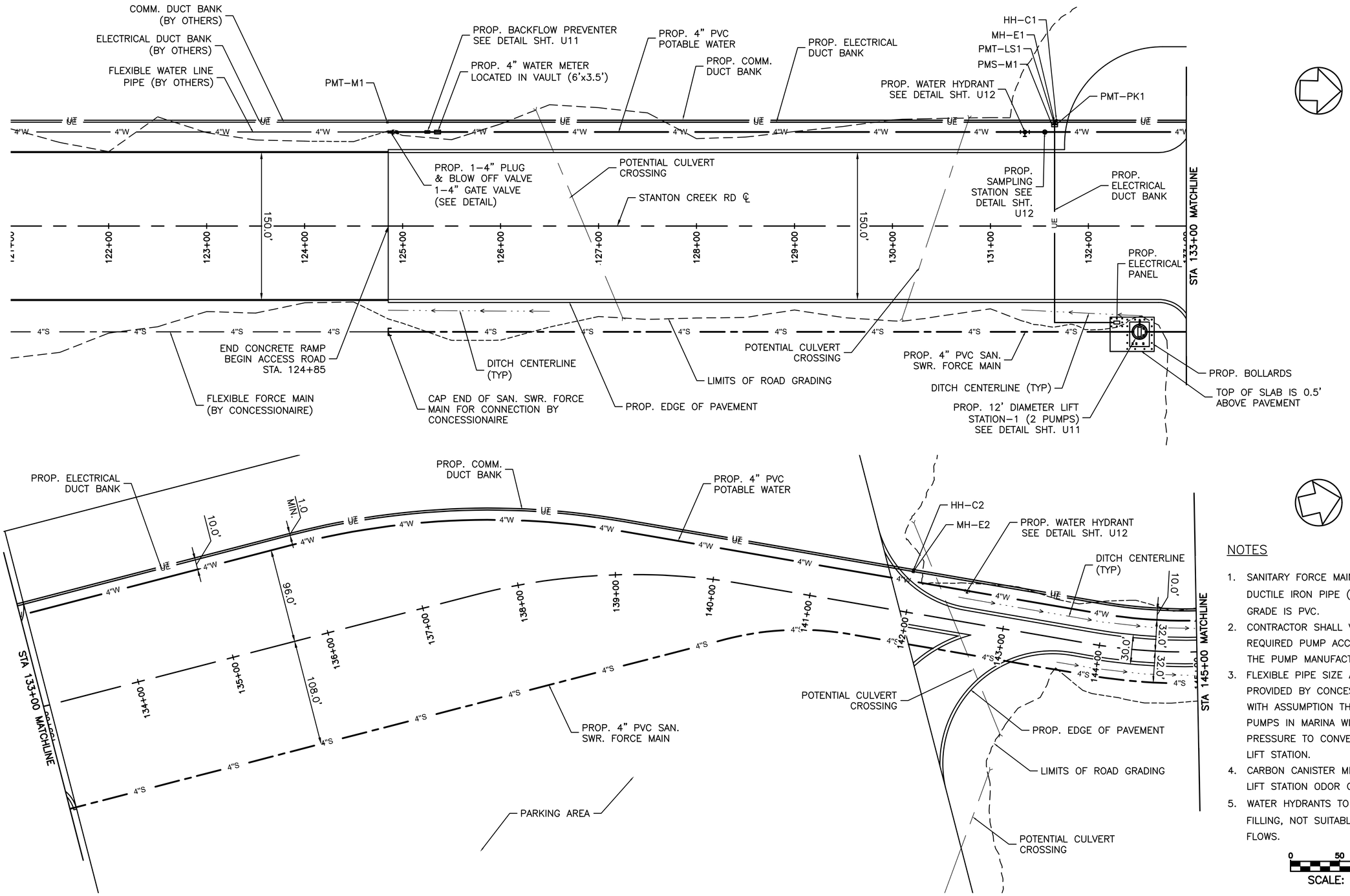

NOTES

1. SANITARY FORCE MAIN PIPE ABOVE GRADE IS DUCTILE IRON PIPE (DIP) FORCE MAIN BELOW GRADE IS PVC.
2. CONTRACTOR SHALL VERIFY THE MINIMUM REQUIRED PUMP ACCESS HATCH SIZE WITH THE PUMP MANUFACTURER.
3. FLEXIBLE PIPE SIZE AND MATERIAL TO BE PROVIDED BY CONCESSIONAIRE LIFT STATION WITH ASSUMPTION THAT SANITARY SEWER PUMPS IN MARINA WILL PROVIDE ENOUGH PRESSURE TO CONVEY SANITARY SEWER INTO LIFT STATION.
4. CARBON CANISTER MIGHT BE CONSIDERED FOR LIFT STATION ODOR CONTROL.
5. WATER HYDRANTS TO USED FOR TANK/TRUCK FILLING, NOT SUITABLE FOR FIRE-FIGHTING FLOWS.

0 50 100 150
SCALE: 1" = 50'

DESIGNED: JF	SUB SHEET NO.	TITLE OF DRAWING UTILITIES	DRAWING NO. #XXX XXXXXX
CADD: GNB	U2	UTILITY PLAN STANTON CREEK ROAD STA. 121+00 TO 145+00	PMIS/PKG NO. 318882
TECH. REVIEW: RVW		GLEN CANYON NATIONAL RECREATION AREA	SHEET 34 OF 45
DATE: 1/19/23			

NOT FOR CONSTRUCTION

1/19/2023 9:15:40 AM C:\pw_workdir\den003\jeg_bollg\d1482901\318882_U2_U10-Pln.dwg

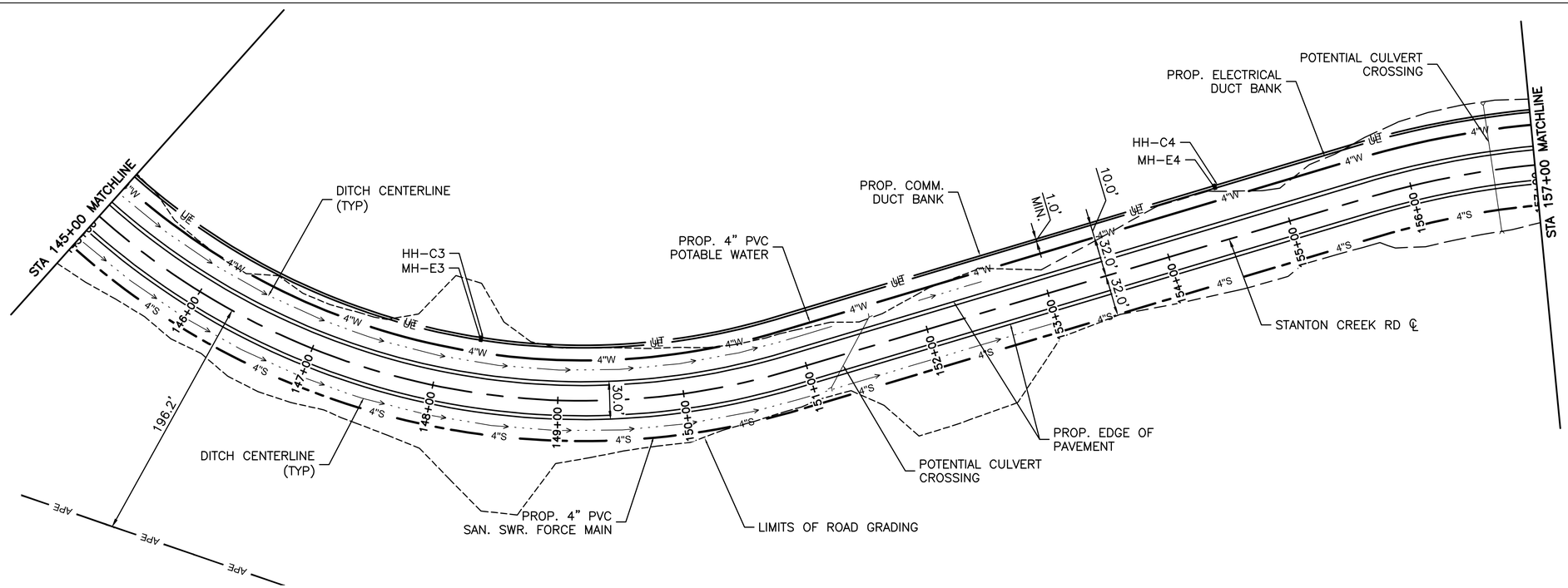

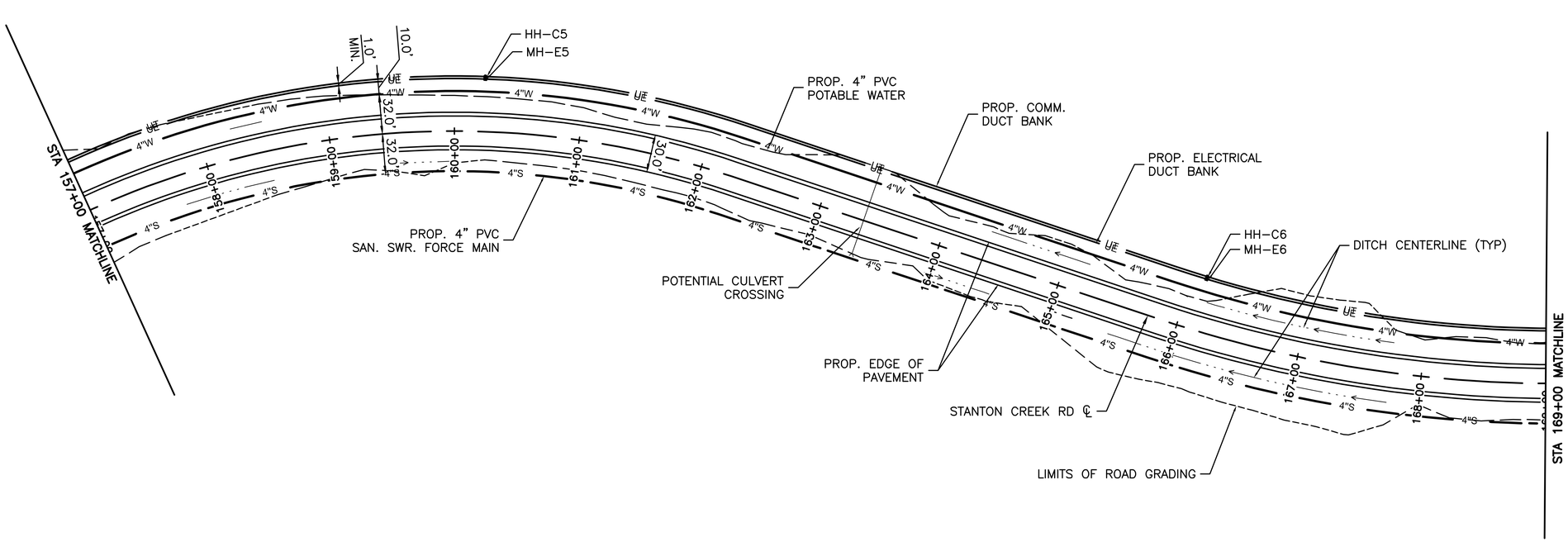

0 50 100 150
SCALE: 1" = 50'

DESIGNED: JF	SUB SHEET NO.	TITLE OF DRAWING	DRAWING NO.
CADD: GNB	U3	UTILITIES	#XXX XXXXXX
TECH. REVIEW: RVW		UTILITY PLAN STANTON CREEK ROAD STA. 145+00 TO 169+00	PMIS/PKG NO. 318882
DATE: 1/19/23		GLEN CANYON NATIONAL RECREATION AREA	SHEET 35 OF 45

NOT FOR CONSTRUCTION

1/19/2023 9:15:55 AM C:\pw_workdir\den003\jeg_ballg\d1482901\318882_U2_U10-Pln.dwg

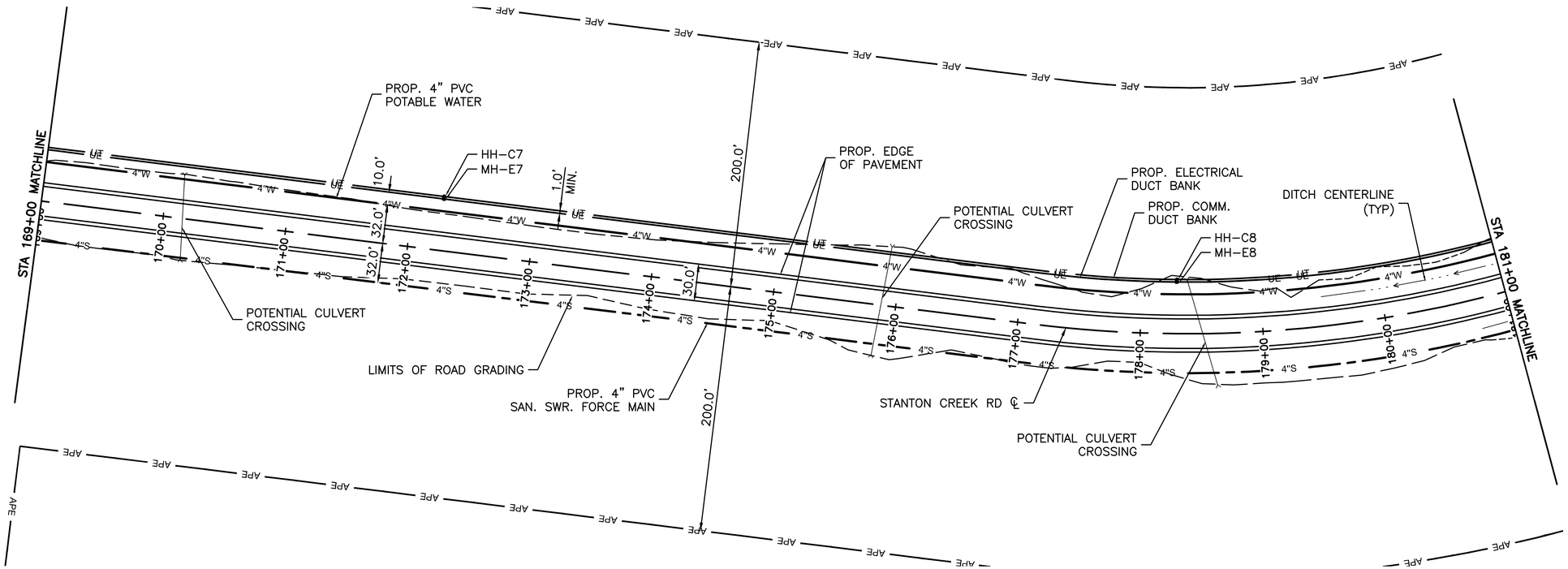

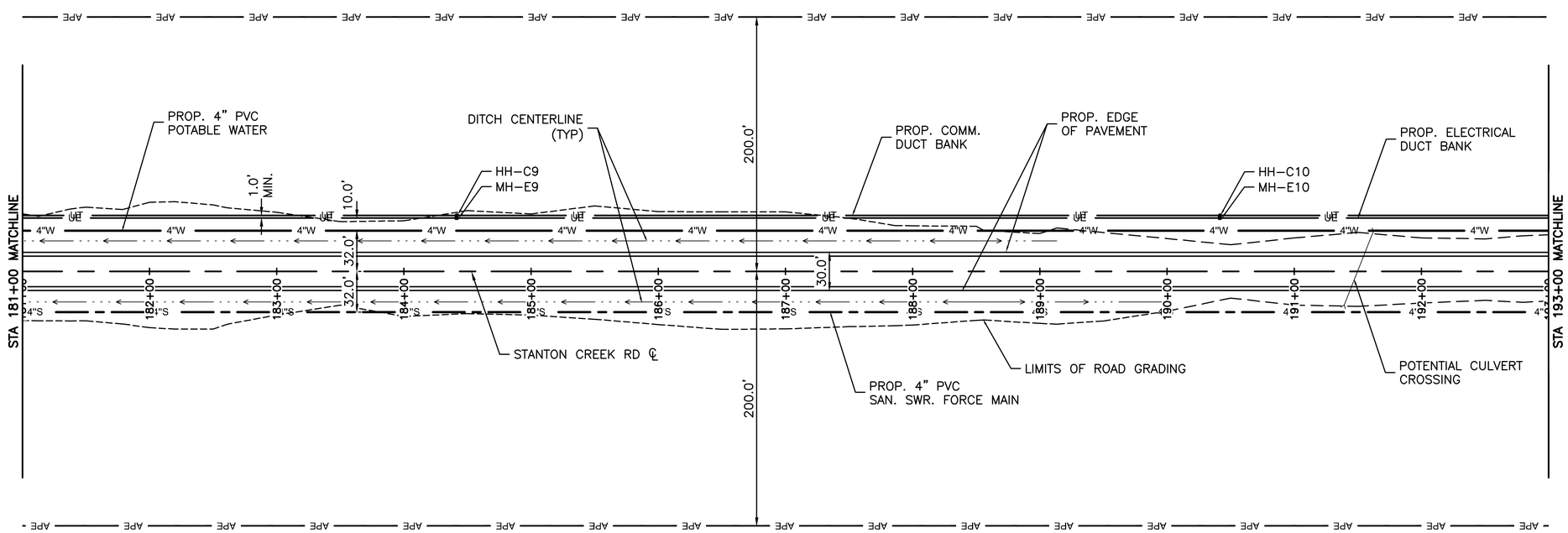

0 50 100 150

SCALE: 1" = 50'

DESIGNED: JF	SUB SHEET NO.	TITLE OF DRAWING UTILITIES	DRAWING NO. #XXX XXXXXX
CADD: GNB	U4	UTILITY PLAN STANTON CREEK ROAD STA. 169+00 TO 193+00	PMIS/PKG NO. 318882
TECH. REVIEW: RVW		GLEN CANYON NATIONAL RECREATION AREA	SHEET 36 OF 45
DATE: 1/19/23			

NOT FOR CONSTRUCTION

1/19/2023 9:16:10 AM C:\pw_workdir\den003\jeg_baltg\d1482901\318882_U2_U10-Pln.dwg

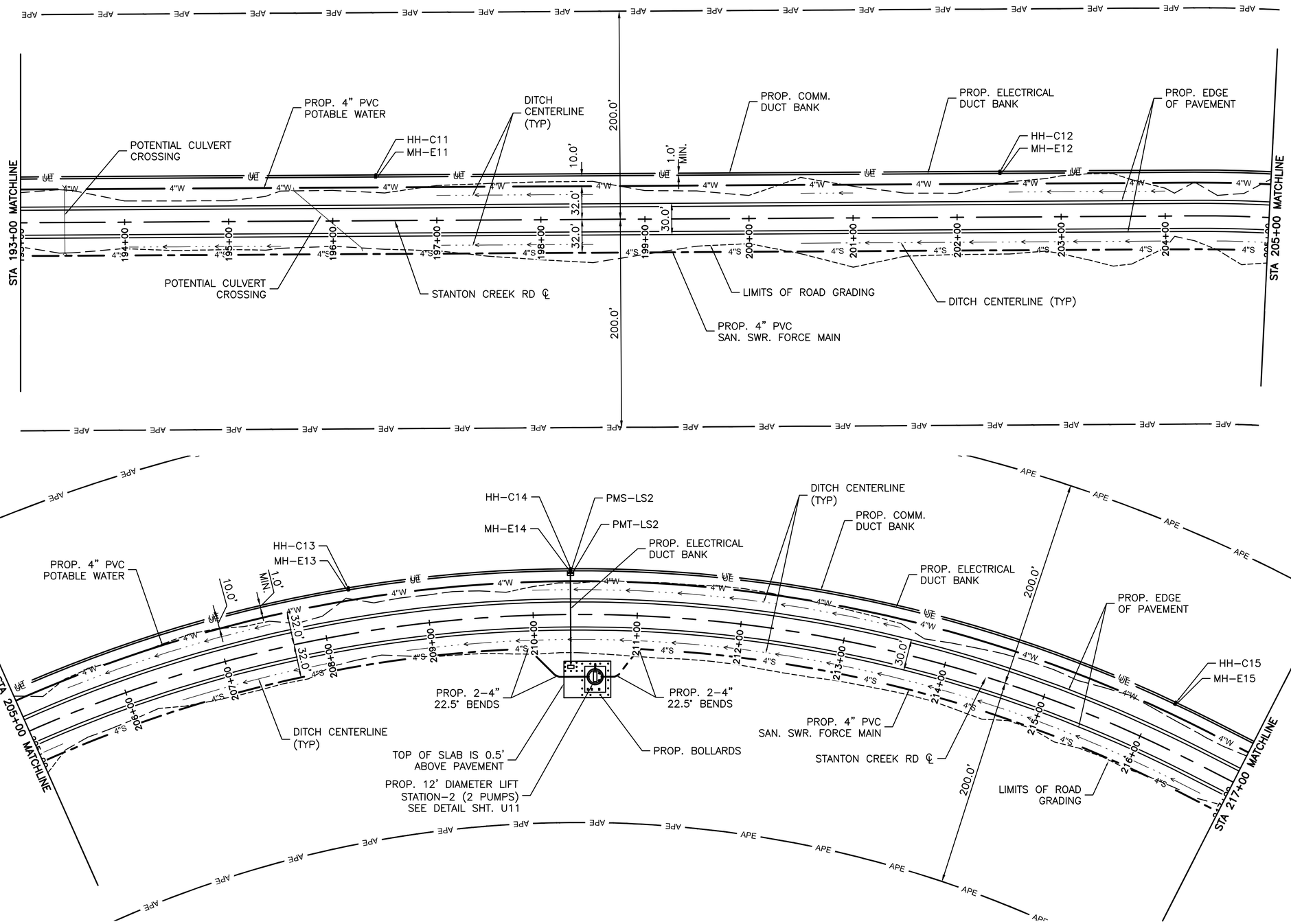

DESIGNED: JF	SUB SHEET NO.	TITLE OF DRAWING UTILITIES	DRAWING NO. #XXX XXXXXX
CADD: GNB	U5	UTILITY PLAN STANTON CREEK ROAD STA. 193+00 TO 217+00	PMIS/PKG NO. 318882
TECH. REVIEW: RVW		GLEN CANYON NATIONAL RECREATION AREA	SHEET 37 OF 45
DATE: 1/19/23			

NOT FOR CONSTRUCTION

1/19/2023 9:16:25 AM C:\pw_workdir\den003\leg_bailg\d1482901\318882_U2_U10-Pln.dwg

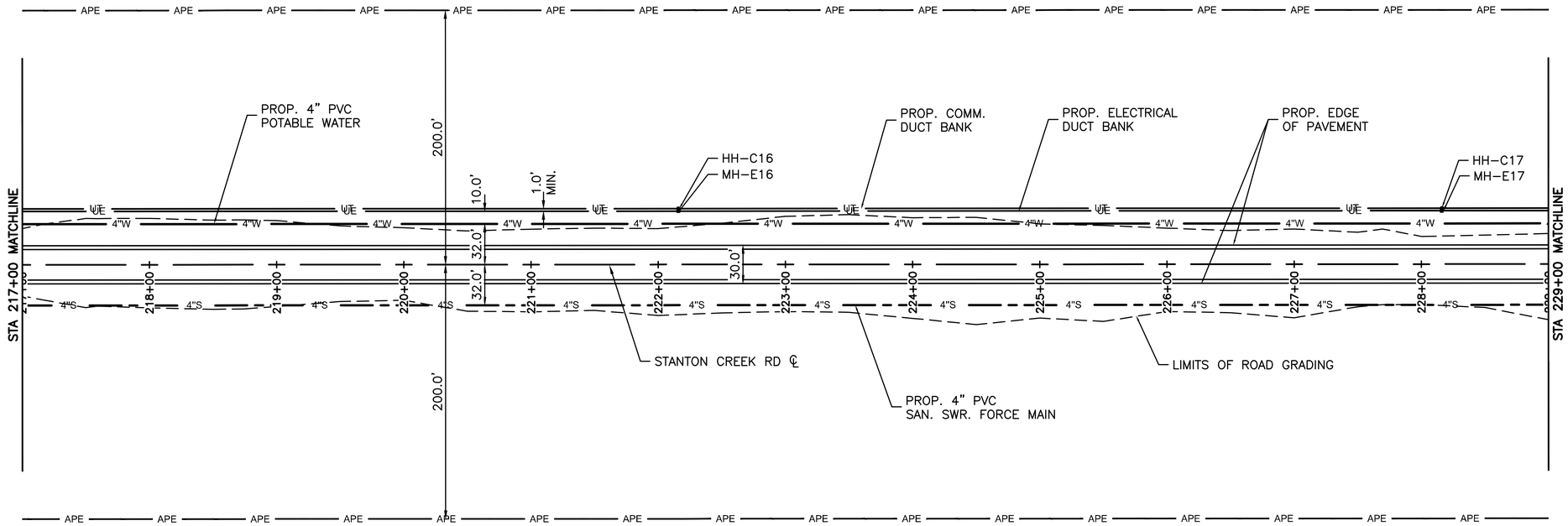

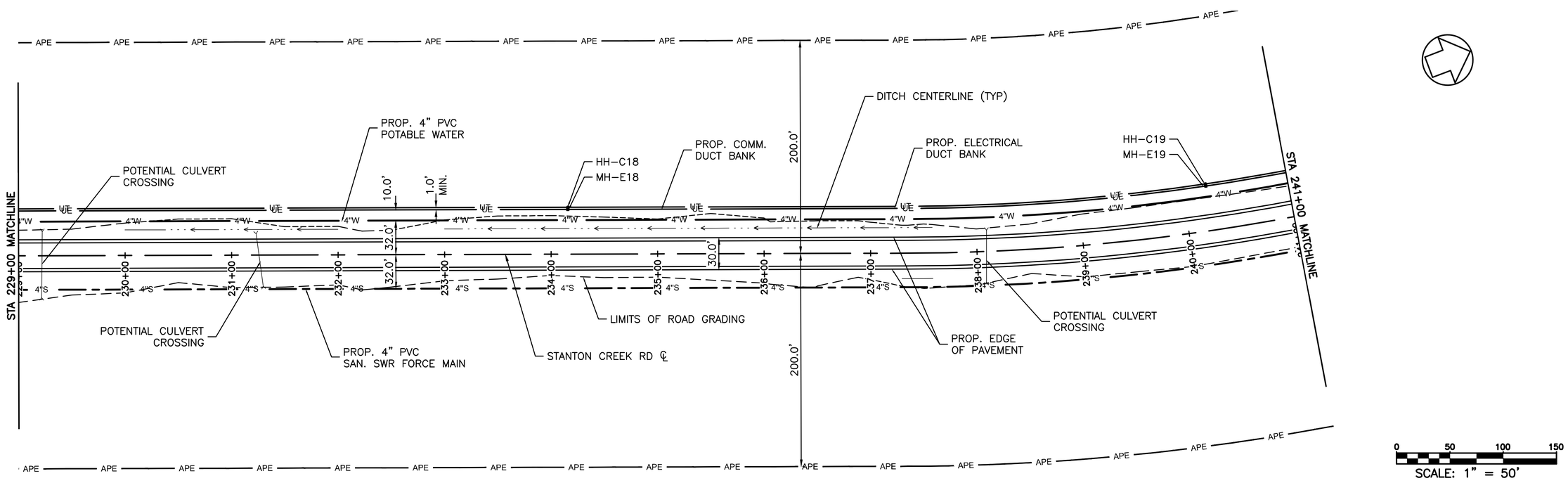

DESIGNED: JF	SUB SHEET NO.	TITLE OF DRAWING	DRAWING NO.
CADD: GNB	U6	UTILITIES UTILITY PLAN STANTON CREEK ROAD STA. 217+00 TO 241+00 GLEN CANYON NATIONAL RECREATION AREA	#XXX XXXXXX
TECH. REVIEW: RVW			PMIS/PKG NO. 318882
DATE: 1/19/23			SHEET 38 OF 45

NOT FOR CONSTRUCTION

1/19/2023 9:16:40 AM C:\pw_workdir\den003\jeg_ballg\d1482901\318882_U2_U10-Pln.dwg

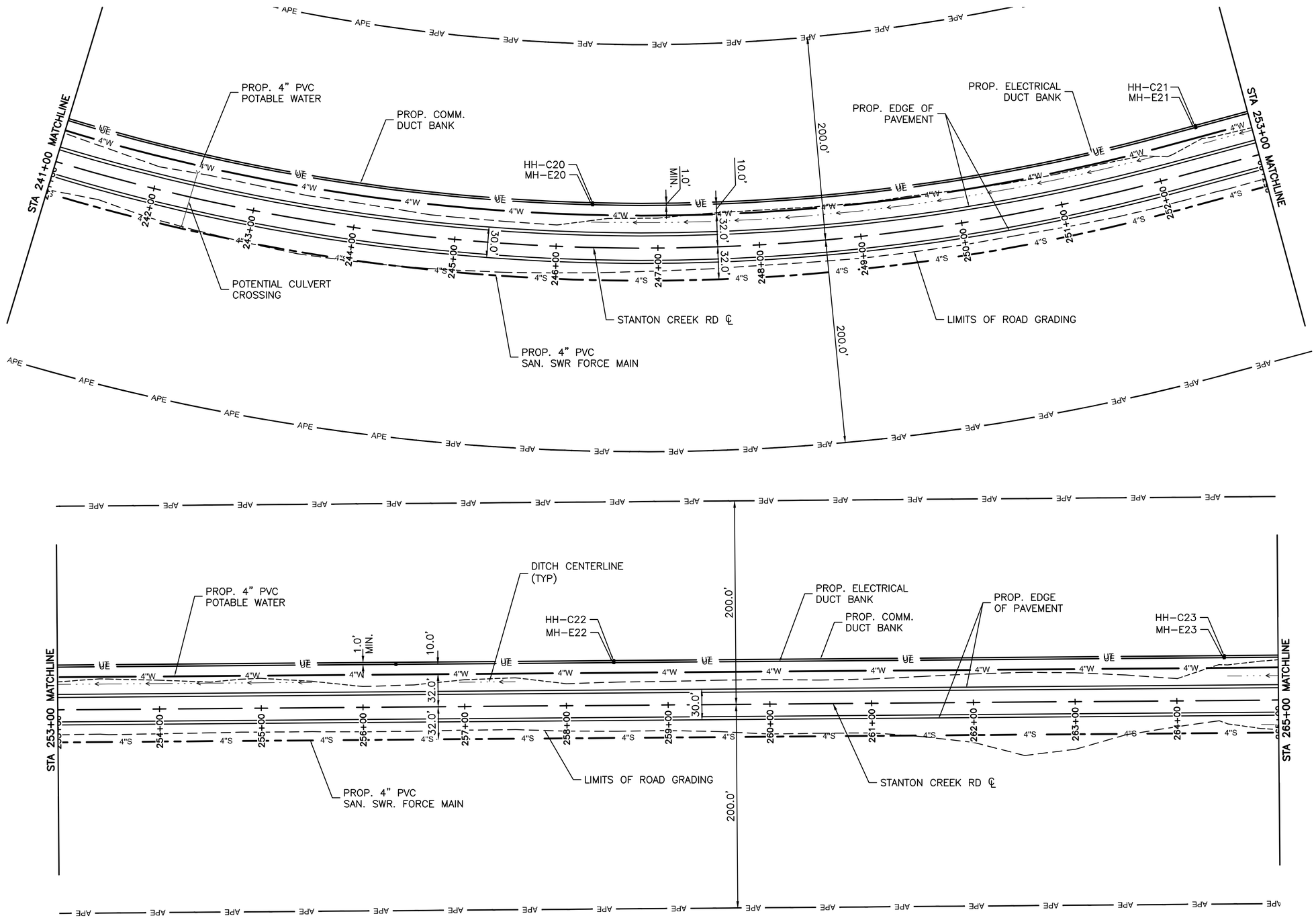

0 50 100 150

SCALE: 1" = 50'

DESIGNED: JF	SUB SHEET NO.	TITLE OF DRAWING UTILITIES	DRAWING NO. #XXX XXXXXX
CADD: GNB	U7	UTILITY PLAN STANTON CREEK ROAD STA. 241+00 TO 265+00	PMIS/PKG NO. 318882
TECH. REVIEW: RVW		GLEN CANYON NATIONAL RECREATION AREA	SHEET 39 OF 45
DATE: 1/19/23			

NOT FOR CONSTRUCTION

1/19/2023 9:16:55 AM C:\pw_workdir\den003\jeg_ballg\d1482901\318882_U2_U10-Pln.dwg

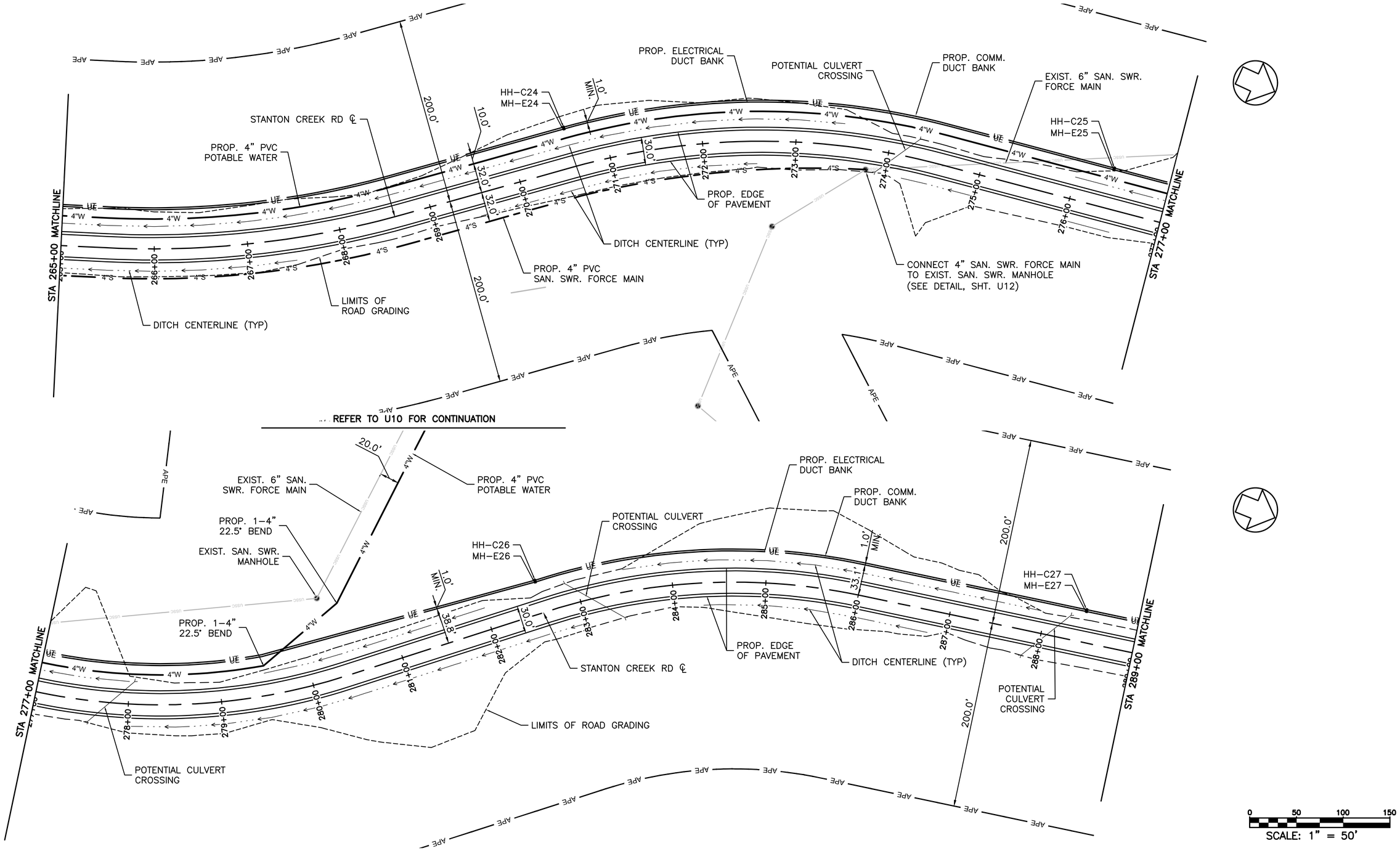

DESIGNED: JF	SUB SHEET NO.	TITLE OF DRAWING UTILITIES	DRAWING NO. #XXX XXXXXX
CADD: GNB	U8	UTILITY PLAN STANTON CREEK ROAD STA. 265+00 TO 289+00	PMIS/PKG NO. 318882
TECH. REVIEW: RVW		GLEN CANYON NATIONAL RECREATION AREA	SHEET 40 OF 45
DATE: 1/19/23			

NOT FOR CONSTRUCTION

1/19/2023 9:17:10 AM C:\pw_workdir\den003\jeg_ballg\d1482901\318882_U2_U10-Pln.dwg

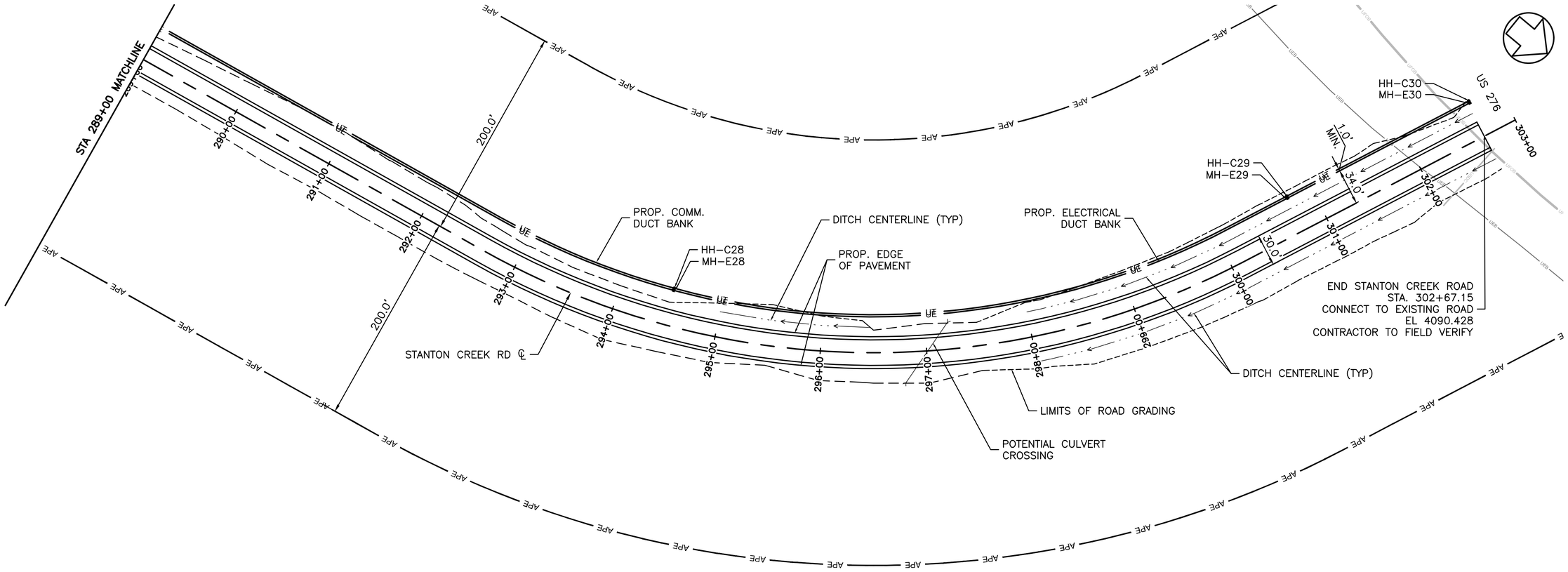

0 50 100 150
SCALE: 1" = 50'

DESIGNED: JF CADD: GNB TECH. REVIEW: RVW DATE: 1/19/23	SUB SHEET NO. U9	TITLE OF DRAWING UTILITIES UTILITY PLAN STANTON CREEK ROAD STA. 289+00 TO 302+69 GLEN CANYON NATIONAL RECREATION AREA	DRAWING NO. #XXX XXXXXX PMIS/PKG NO. 318882 SHEET 41 OF 45

NOT FOR CONSTRUCTION

1/19/2023 12:58:00 PM C:\pw_workdir\den003\jeg_bollg\d1482901\318882_U2_U10-Pln.dwg

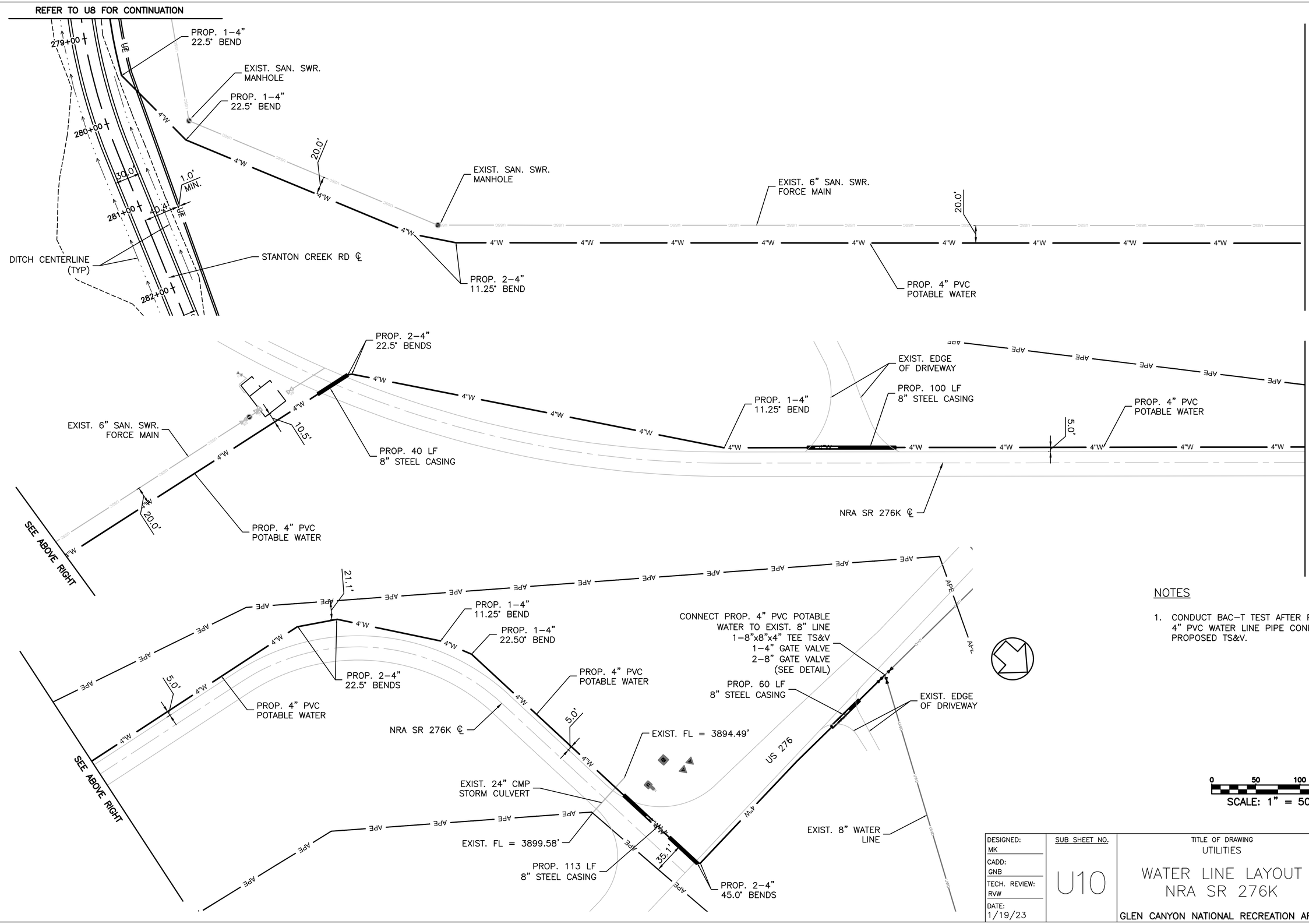

NOTES

1. CONDUCT BAC–T TEST AFTER PROPOSED 4" PVC WATER LINE PIPE CONNECT WITH PROPOSED TS&V.

DESIGNED: MK	SUB SHEET NO.	TITLE OF DRAWING UTILITIES	DRAWING NO. #XXX XXXXXX
CADD: GNB	U10	WATER LINE LAYOUT NRA SR 276K	PMIS/PKG NO. 318882
TECH. REVIEW: RVW		GLEN CANYON NATIONAL RECREATION AREA	SHEET 42 OF 45
DATE: 1/19/23			

NOT FOR CONSTRUCTION

1/19/2023 12:50:55 PM C:\pw_workdir\den003\jeg_ballg\d1482901\318882_U2_U10-Pln.dwg

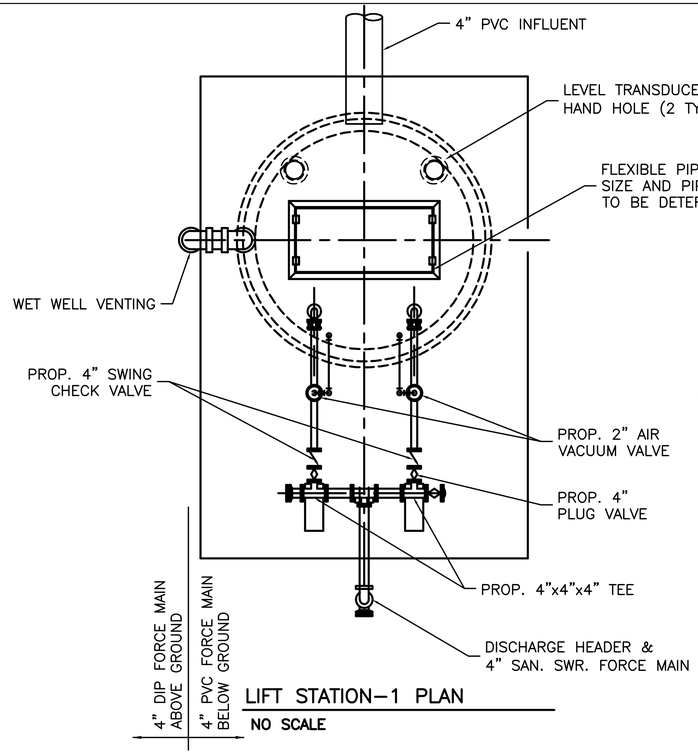

LIFT STATION–1 PLAN

NO SCALE

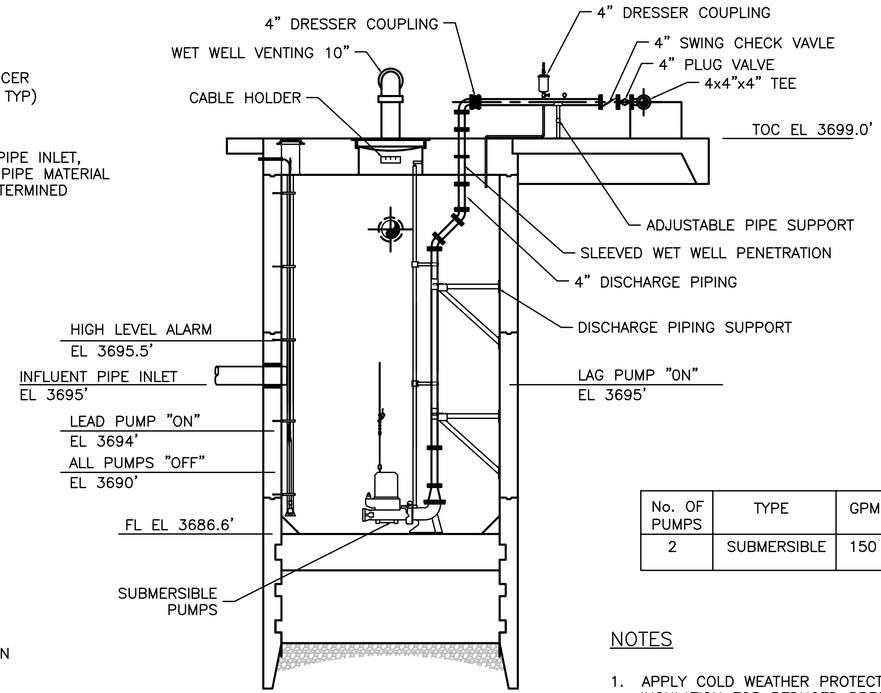

1 LIFT STATION–1 SECTION

NO SCALE

No. OF PUMPS	TYPE	GPM	TDH	ELECTRIAL HP
2	SUBMERSIBLE	150	275	15

NOTES

1. APPLY COLD WEATHER PROTECTION INSULATION FOR REDUCED PRESSURE PIPING.

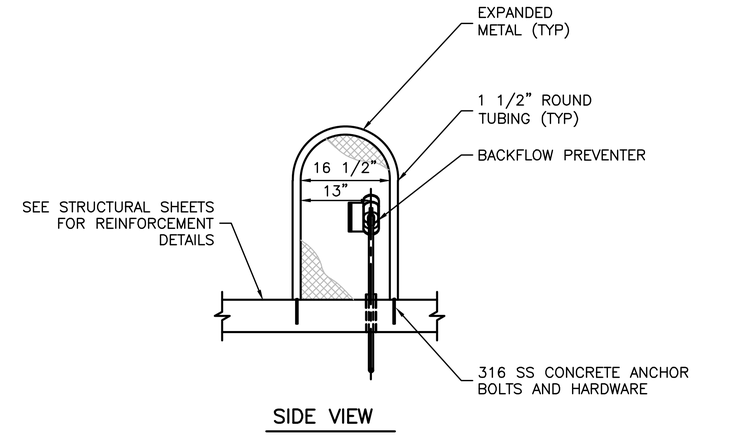

SIDE VIEW

PLAN VIEW

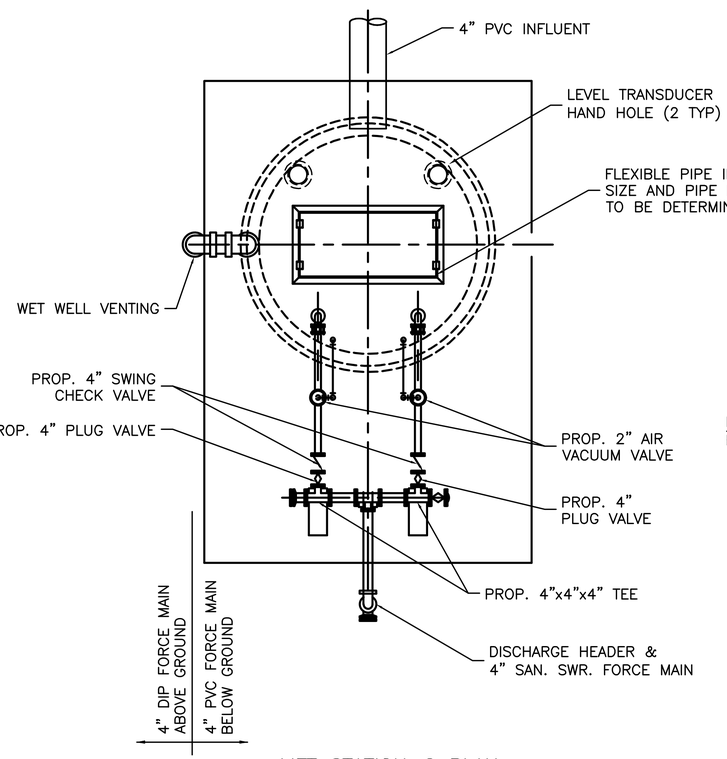

LIFT STATION–2 PLAN

NO SCALE

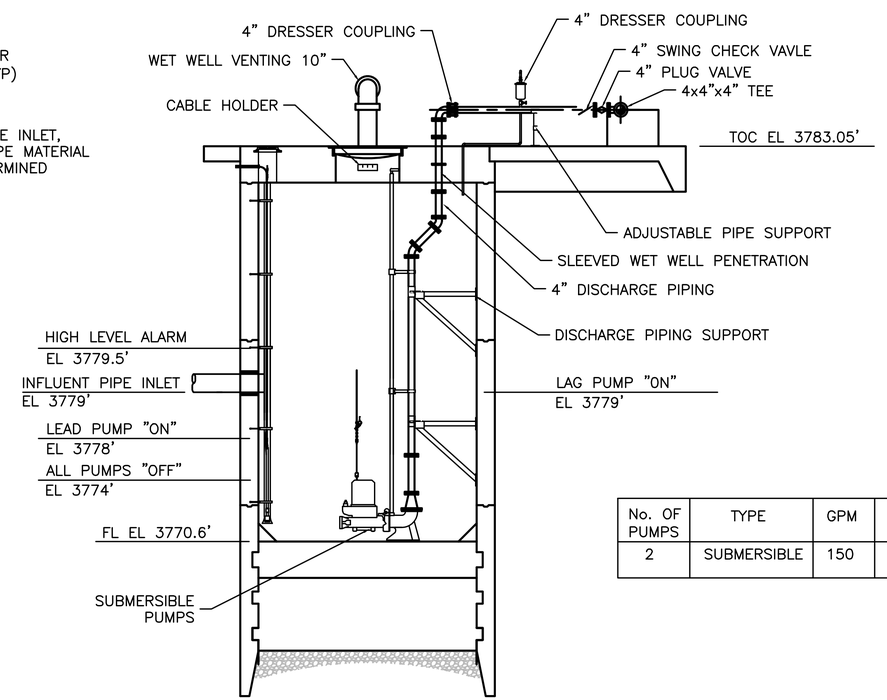

2 LIFT STATION–2 SECTION

NO SCALE

No. OF PUMPS	TYPE	GPM	TDH	ELECTRIAL HP
2	SUBMERSIBLE	150	450	25

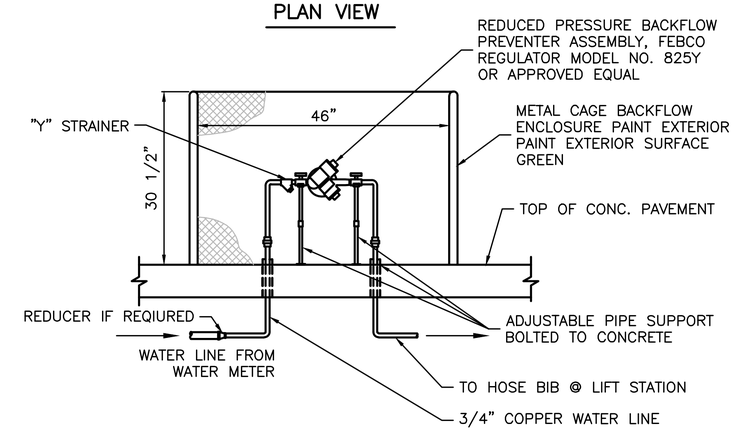

FRONT VIEW

REDUCED PRESSURE BACKFLOW PREVENTER INSTALLATION

DESIGNED: JF	SUB SHEET NO.	TITLE OF DRAWING UTILITIES	DRAWING NO. #XXX XXXXXX
CADD: GNB	U11	FORCE MAIN AND WATER LINE DETAILS SHEET 1	PMIS/PKG NO. 318882
TECH. REVIEW: RVW		GLEN CANYON NATIONAL RECREATION AREA	SHEET 43 OF 45
DATE: 1/19/23			

NOT FOR CONSTRUCTION

1/19/2023 9:19:10 AM C:\pw_workdir\den003\jeg_ballg\d1482901\318882_U1_U11-U13-Det.dwg

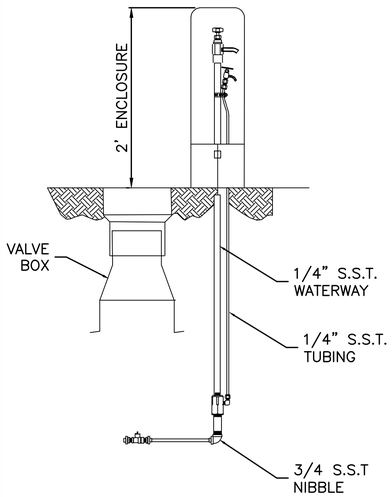

SAMPLING STATION DETAIL

NO SCALE

USE KUPFERLE FOUNDRY COMPANY #88-SS SAMPLING STATION DETAIL

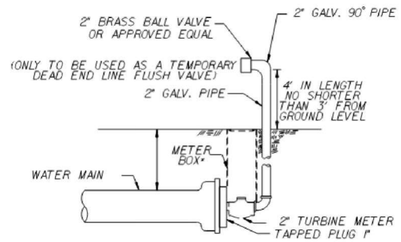

BLOW OFF DETAIL

NO SCALE

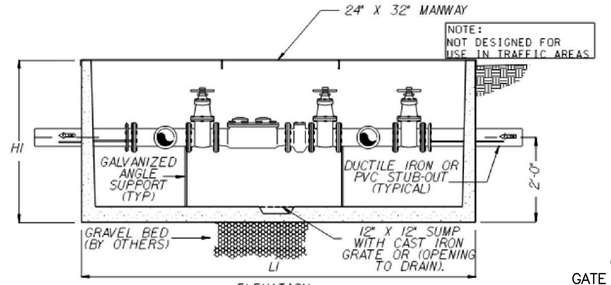

Specifications

CONCRETE: Class I concrete with design strength of 4500 PSI at 28 days. Unit is of monolithic construction at floor and forst stage of wall with sectional riser to requird depth. Gross empty weight of as indicated.

REINFORCEMENT: Grade 60 reinforced. Steel rebar conforming to ASTM A615 on required centers or equal.

STEEL COVER: ¼" steel skid-resistant floor plate welded to 3" angle frame with (2) 3"x2-3/8" I beam supports.

Engineering Data

The meter assembly shall be factory assembled in vault & hydrostatically tested prior to delivery with meter purchased from the City of Baytown. Field excavation & preparation shall be complete prior to delivery. △

* Irrigation Meter(s) shall have a backflow preventer

LARGE METER INSTALLATION (2" & UP)

LARGE METER INSTALLATION (2" & UP) DETAIL

NO SCALE

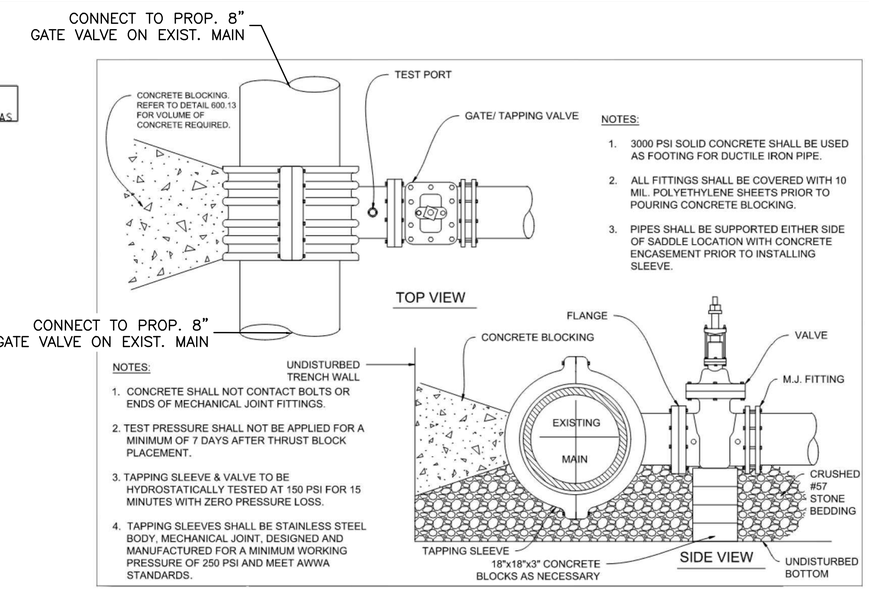

NOTES:

1. 3000 PSI SOLID CONCRETE SHALL BE USED AS FOOTING FOR DUCTILE IRON PIPE.
2. ALL FITTINGS SHALL BE COVERED WITH 10 MIL. POLYETHYLENE SHEETS PRIOR TO POURING CONCRETE BLOCKING.
3. PIPES SHALL BE SUPPORTED EITHER SIDE OF SADDLE LOCATION WITH CONCRETE ENCASEMENT PRIOR TO INSTALLING SLEEVE.

NOTES:

1. CONCRETE SHALL NOT CONTACT BOLTS OR ENDS OF MECHANICAL JOINT FITTINGS.
2. TEST PRESSURE SHALL NOT BE APPLIED FOR A MINIMUM OF 7 DAYS AFTER THRUST BLOCK PLACEMENT.
3. TAPPING SLEEVE & VALVE TO BE HYDROSTATICALLY TESTED AT 150 PSI FOR 15 MINUTES WITH ZERO PRESSURE LOSS.
4. TAPPING SLEEVES SHALL BE STAINLESS STEEL BODY, MECHANICAL JOINT, DESIGNED AND MANUFACTURED FOR A MINIMUM WORKING PRESSURE OF 250 PSI AND MEET AWWA STANDARDS.

TAPPING SLEEVE AND VALVE

TAPPING SLEEVE AND VALVE DETAIL

NO SCALE

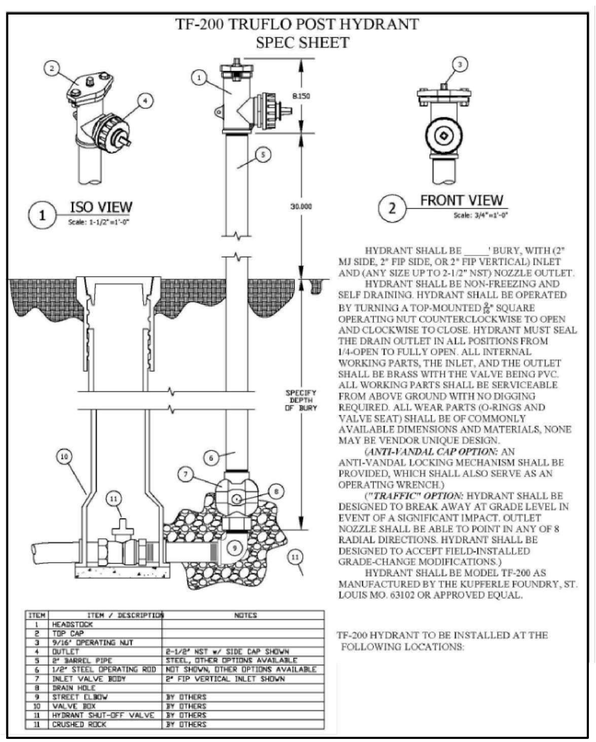

HYDRANT SHALL BE _____' BURY, WITH (2" MJ SIDE, 2" FIP SIDE, OR 2" FIP VERTICAL) INLET AND (ANY SIZE UP TO 2-1/2" NST) NOZZLE OUTLET.

HYDRANT SHALL BE NON-FREEZING AND SELF DRAINING. HYDRANT SHALL BE OPERATED BY TURNING A TOP-MOUNTED 5/8" SQUARE OPERATING NUT COUNTERCLOCKWISE TO OPEN AND CLOCKWISE TO CLOSE. HYDRANT MUST SEAL THE DRAIN OUTLET IN ALL POSITIONS FROM 1/4-OPEN TO FULLY OPEN. ALL INTERNAL WORKING PARTS, THE INLET, AND THE OUTLET SHALL BE BRASS WITH THE VALVE BEING PVC. ALL WORKING PARTS SHALL BE SERVICEABLE FROM ABOVE GROUND WITH NO DIGGING REQUIRED. ALL WEAR PARTS (O-RINGS AND VALVE SEAT) SHALL BE OF COMMONLY AVAILABLE DIMENSIONS AND MATERIALS, NONE MAY BE VENDOR UNIQUE DESIGN.

(*ANTI-VANDAL CAP OPTION*: AN ANTI-VANDAL LOCKING MECHANISM SHALL BE PROVIDED, WHICH SHALL ALSO SERVE AS AN OPERATING WRENCH.)

(*"TRAFFIC" OPTION*: HYDRANT SHALL BE DESIGNED TO BREAK AWAY AT GRADE LEVEL IN EVENT OF A SIGNIFICANT IMPACT. OUTLET NOZZLE SHALL BE ABLE TO POINT IN ANY OF 8 RADIAL DIRECTIONS. HYDRANT SHALL BE DESIGNED TO ACCEPT FIELD-INSTALLED GRADE-CHANGE MODIFICATIONS.)

HYDRANT SHALL BE MODEL TF-200 AS MANUFACTURED BY THE KUPFERLE FOUNDRY, ST. LOUIS MO. 63102 OR APPROVED EQUAL.

ITEM	ITEM / DESCRIPTION	NOTES
1	HEADSTOCK	
2	TOP CAP	
3	9/16" OPERATING NUT	
4	OUTLET	8-1/8" NST w/ SIDE CAP SHOWN
5	8" BARREL PIPE	STEEL, OTHER OPTIONS AVAILABLE
6	1/8" STEEL OPERATING ROD	NOT SHOWN, OTHER OPTIONS AVAILABLE
7	INLET VALVE BODY	2" FIP VERTICAL INLET SHOWN
8	DRAIN HOLE	
9	STREET ELBOW	BY OTHERS
10	VALVE BOX	BY OTHERS
11	HYDRANT SHUT-OFF VALVE	BY OTHERS
11	CRUSHED ROCK	BY OTHERS

TF-200 HYDRANT TO BE INSTALLED AT THE FOLLOWING LOCATIONS:

POST HYDRANT DETAIL

NO SCALE

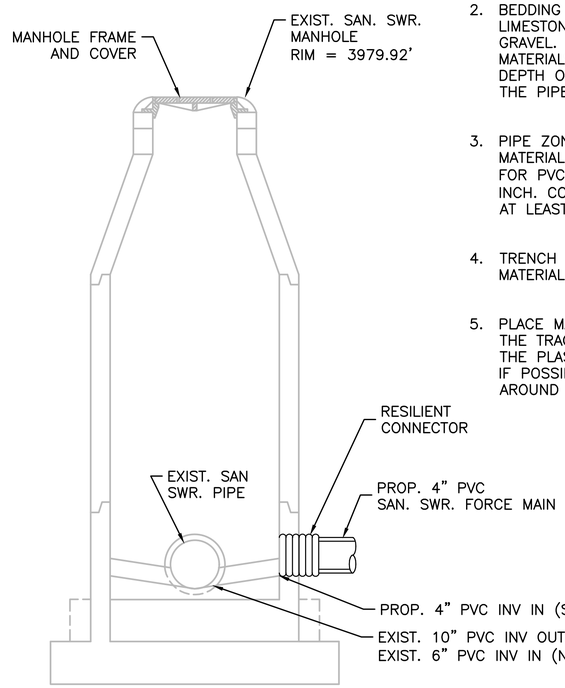

EXISTING SAN. SWR. MANHOLE CONNECTION DETAIL

NO SCALE

NOTES

1. ALL EXCAVATION SHALL BE IN ACCORDANCE WITH OSHA TRENCHING AND EXCAVATION SAFETY STANDARDS, AS WELL AS ALL LOCAL AND/OR STATE REGULATIONS.
2. BEDDING MATERIAL SHALL CONSIST OF SELECT FILL SAND, LIMESTONE SCREENINGS, CLEAN STONE, OR WASHED GRAVEL. STONES LARGER THAN PIPE ZONE BACKFILL MATERIALS DESCRIBED BELOW SHALL BE REMOVED FOR A DEPTH OF AT LEAST 6 INCHES BELOW THE BOTTOM OF THE PIPE.
3. PIPE ZONE BACKFILL SHALL CONSIST OF BEDDING MATERIAL CONFORMING TO ASTM D2774, AS A MINIMUM. FOR PVC PIPE, BACKFILL MAXIMUM PARTICLE SIZE IS 3/4 INCH. COMPACT BEDDING AND PIPE ZONE BACKFILL TO AT LEAST 95% DENSITY.
4. TRENCH ZONE BACKFILL TO CONSIST OF GRANULAR MATERIAL COMPACTED TO 95% DENSITY.
5. PLACE MARKER TAPE 2 FEET ABOVE PIPE. THE TRACER WIRE SHALL BE LAID WITHIN 6 INCHES OF THE PLASTIC PIPE WHEN PRACTICAL AND DIRECTLY ABOVE IF POSSIBLE. TRACER WIRE SHOULD NOT BE WRAPPED AROUND PIPE OR CONNECTORS EXCEPT THE RISERS.

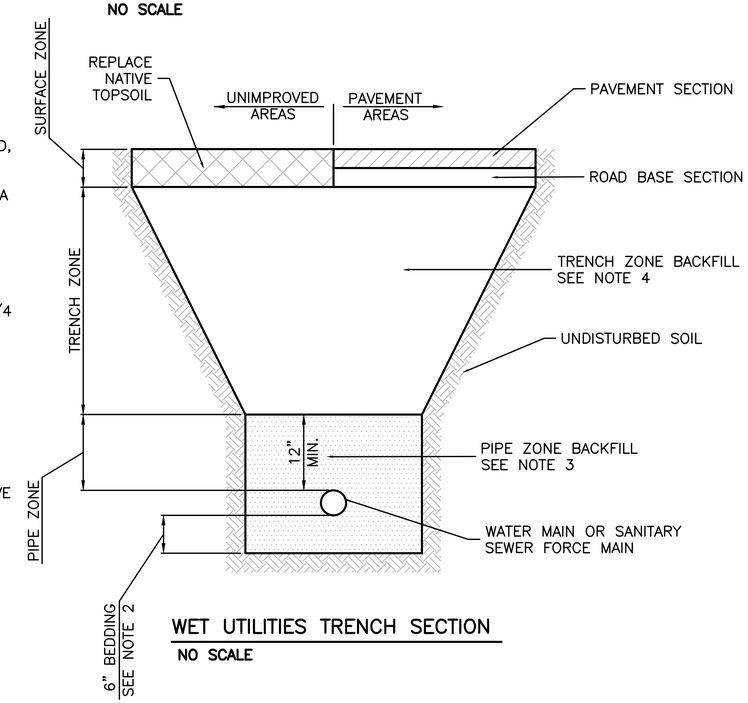

WET UTILITIES TRENCH SECTION

NO SCALE

DESIGNED: JF CADD: GNB TECH. REVIEW: RVW DATE: 1/19/23	SUB SHEET NO. U12	TITLE OF DRAWING UTILITIES FORCE MAIN AND WATER LINE DETAILS SHEET 2 GLEN CANYON NATIONAL RECREATION AREA	DRAWING NO. #XXX XXXXXX PMIS/PKG NO. 318882 SHEET 44 OF 45

NOT FOR CONSTRUCTION

1/19/2023 9:19:34 AM C:\pw_workdir\den003\jeg_ballg\d1482901\318882_U1_U11-U13-Det.dwg

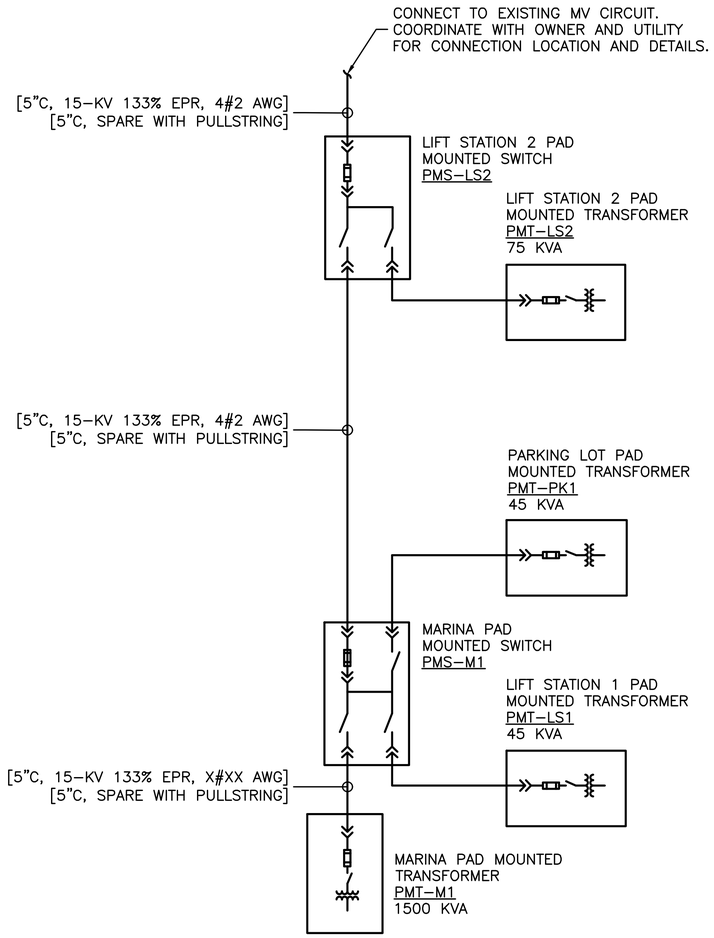

ELECTRICAL ONE LINE DIAGRAM

NO SCALE

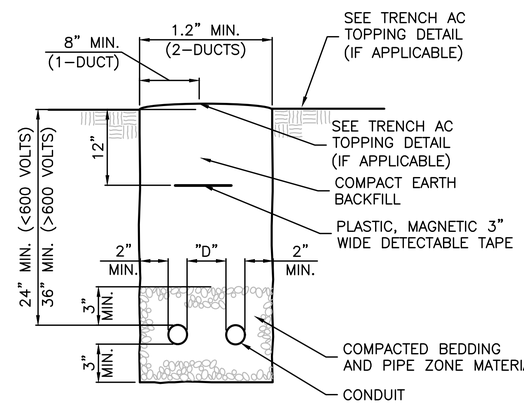

D = 3" MIN. FOR 2" AND LARGER CONDUIT

D = 2" MIN. FOR 1-1/2" AND SMALLER CONDUIT

TRENCH AND CONDUIT PLACEMENT

NO SCALE

DESIGNED: JF CADD: GNB TECH. REVIEW: RVW DATE: 1/19/23	SUB SHEET NO. U13	TITLE OF DRAWING UTILITIES ELECTRICAL DETAILS GLEN CANYON NATIONAL RECREATION AREA	DRAWING NO. #XXX XXXXXX PMIS/PKG NO. 318882 SHEET 45 OF 45

NOT FOR CONSTRUCTION

1/19/2023 9:20:01 AM C:\pw_workdir\den003\jeg_bollg\d1482901\318882_U1_U11-U13-Det.dwg