JB ANG COVERED PARKING
BUILDING 41
41 MAY ROAD
ST. LOUIS, MO 63125

P R O J E C T T E A M

MEP
BRANCHPATTERN

1508 Grand Boulevard
Kansas City, MO 64108

PHONE 816.531.2121

ARCHITECT
ACI BOLAND, INC.

17107 Chesterfield Airport Road, Ste 110
Chesterfield, MO 63005

PHONE 314.991.9993

STRUCTURAL
BOB D. CAMPBELL & CO.

4338 Belleview Ave.
Kansas City, MO 64111

PHONE 816.531.4144

CIVIL
BHC

7101 College Blvd., Ste. 400
Overland Park, KS 66210

PHONE 913.663.1900

CODE SUMMARY

PROJECT CONSTRUCTION PURPOSE:
NEW CONSTRUCTION OF EXTERIOR PARKING CANOPY

OWNER:
JEFFERSON BARRACKS / AIR NATIONAL GUARD

DESIGNER:
ACI BOLAND ARCHITECTS
17107 CHESTERFIELD AIRPORT RD. SUITE 110
CHESTERFIELD, MO 63005
PHONE: (314) 991-9993

LOCAL AUTHORITY:
JEFFERSON BARRACKS / AIR NATIONAL GUARD

CODE INFORMATION:
DEPARTMENT OF DEFENSE BUILDING CODE 2021 (IBC 2021 WITH AMENDMENTS)
DEPARTMENT OF DEFENSE PLUMBING CODE 2018 (IPC 2018 WITH AMENDMENTS)
DEPARTMENT OF DEFENSE MECHANICAL CODE 2018 (IMC 2018 WITH AMENDMENTS)
DEPARTMENT OF DEFENSE ELECTRICAL CODE 2017 (NFPA 70, 2017)
DEPARTMENT OF DEFENSE ENERGY CODE 2021 (IECC 2021)
DEPARTMENT OF DEFENSE FIRE CODE 2021 (NFPA 1, 2021)
DEPARTMENT OF DEFENSE LIFE SAFETY CODE (NFPA 101, 2021)

2010 ADA STANDARDS FOR ACCESSIBLE DESIGN / AMERICANS WITH DISABILITIES ACT OF 1990
2009 ICC/ANSI A117.1

NOTE: IF CODE REQUIREMENTS OVERLAP, THE MOST STRINGENT SHALL APPLY.

TYPE OF CONSTRUCTION: II-B

OCCUPANCY GROUP: U - UTILITY & MISCELLANEOUS (NON-ENCLOSED PARKING CANOPY)

OCCUPANT LOAD: N/A (NON-ENCLOSED PARKING CANOPY)

AREA OF CONSTRUCTION:
+/- 6,100 SF

REQUIRED FIRE RESISTANCE RATINGS (IN HOURS) PER NFPA 101 A.8.2.1.2:

EXTERIOR BEARING WALLS	0 HR
INTERIOR BEARING WALLS	0 HR
PRIMARY STRUCTURAL FRAME	0 HR
FLOOR CONSTRUCTION	0 HR
ROOF CONSTRUCTION	0 HR
INTERIOR NON-BEARING WALLS	0 HR

ABBREVIATIONS

AC.	ACOUSTIC/ACOUSTICAL
ADD.	ADDENDUM
ADDN.	ADDITION
ABC	AGGREGATE BASE COURSE
AFF	ABOVE FINISH FLOOR
AGG.	AGGREGATE
A/C	AIR CONDITIONING
AL.	ALUMINUM
ALT.	ALTERNATE
A.B.	ANCHOR BOLT
&	AND
ARCH.	ARCHITECT
ASP.	ASPHALT
@	AT
ACT	ACOUSTIC CEILING TILE/PANEL
∠	ANGLE
BLKG.	BLOCKING
BSMT.	BASEMENT
BM.	BEAM
B.M.	BENCHMARK
BD.	BOARD
B.O.	BOTTOM OF
BLDG.	BUILDING
CAB'T.	CABINET
C.I.P.	CAST IN PLACE
C.B.	CATCH BASIN
CLG.	CEILING
CEM.	CEMENT/CEMENTITIOUS
CG.	CENTIGRAM
CM	CENTIMETER
CL.	CENTER LINE
CER.	CERAMIC
C.T.	CERAMIC TILE
CHAN.	CHANNEL
[	CHANNEL
CLR.	CLEAR
C.O.	CLEAN OUT
CLOS.	CLOSET
COL.	COLUMN
CONC.	CONCRETE
CONN.	CONNECTION
CONST.	CONSTRUCTION
C.J.	CONTROL JOINT
	CONSTRUCTION JOINT
CONT.	CONTINUOUS
CONTR.	CONTRACTOR
COR'G.	CORRUGATED
CTR.	COUNTER
CTSK.	COUNTERSUNK
C.M.U.	CONCRETE MASONRY UNIT
D.P.	DAMP PROOFING
DB.	DECIBEL
DIAG.	DIAGONAL
DIAM.	DIAMETER
DIM.	DIMENSION
DISP.	DISPENSER
DWL.	DOWEL
DN.	DOWN
D.S.	DOWNSPOUT
DWG.	DRAWING
EA.	EACH
ELEC	ELECTRIC
E.W.C.	ELECTRIC WATER COOLER
EL.	ELEVATION
ELEV.	ELEVATOR
EQ.	EQUAL
EQUIP.	EQUIPMENT
EXH.	EXHAUST
EXPAN.	EXPANSION
E.J.	EXPANSION JOINT
EXIST.	EXISTING
EXT.	EXTERIOR
FT.	FEET / FOOT
FIN.	FINISH
FIXT.	FIXTURE
FL.	FLASHING
FLR.	FLOOR
F.D.	FLOOR DRAIN
FLOR.	FLUORESCENT
FTG.	FOOTING
FND.	FOUNDATION
FR.	FRAME
F.H.C.	FIRE HOSE CAB.
FV.	FIELD VERIFY
GA.	GAUGE
GL.	GLASS / GLAZING
GD.	GRADE
G.	GRAM
GRL.	GRILLE
GRD.	GRID
GND.	GROUND
G.S.	GALVANIZED STEEL
GYP.	GYPSUM
GWB/G.B.	GYPSUM BOARD
H.R.	HAND RAIL
HDN.	HARDENER
HDW.	HARDWARE
HDWD.	HARDWOOD
HTR.	HEATER
HT.	HEIGHT
H.P.	HIGH POINT
H.M.	HOLLOW METAL
HORIZ.	HORIZONTAL
H.B.	HOSE BIB
H.W.	HOT WATER
IN.	INCH / INCHES
I.D.	INSIDE DIAMETER
INSUL.	INSULATION
INT.	INTERIOR
INV.	INVERT
JAN.	JANITOR
JT.	JOINT
JST.	JOIST
K.P.	KICK PLATE
LAM.	LAMINATED
LB.	POUND
LDG.	LANDING
LTH.	LATH
LAV.	LAVATORY
LG.	LENGTH
LOC.	LOCATION
LT.	LIGHT
L.W.C.	LIGHT WEIGHT CONCRETE
LVR.	LOUVER
LOC.	LOCATION
M.O.	MASONRY OPENING
MAT'L.	MATERIAL
MFR.	MANUFACTURER
MB.	MARKER BOARD
MAX.	MAXIMUM
MECH.	MECHANICAL
MTL.	METAL
M.L.	METAL LATH
M.	METER
MIN.	MINIMUM
MLDG.	MOLDING
MULL.	MULLION
N.G.	NATURAL GRADE
NOM.	NOMINAL
N.I.C.	NOT IN CONTRACT
N.T.S.	NOT TO SCALE
NO. / #	NUMBER
OBS.	OBSCURE
O.C.	ON CENTER
OPN'G.	OPENING
O.A.	OVERALL
O.D.	OUTSIDE DIAMETER
O.F.S.	OVERFLOW SCUPPER
O.F.D.	OVERFLOW DRAIN
O.H.D.	OVERHEAD DOOR
PTD.	PAINTED
PG.	PAGE
PLAM.	PLASTIC LAMINATE
PR.	PAIR
PNL.	PANEL
PTN.	PARTITION
d	PENNY
PL	PLATE
PLBG.	PLUMBING
PLYWD.	PLYWOOD
PT.	POINT
P.S.I.	POUNDS PER SQ. IN.
P.S.F.	POUNDS PER SQ. FT.
P.C.	PRECAST
P.L.	PROPERTY LINE
R.	RISER, RISERS
RAD.	RADIUS
R.D.	ROOF DRAIN
RB.	RESILIENT BASE
RE.	REFER TO
REG.	REGISTER
REQ'D.	REQUIRED
REV.	REVISION
RF'G.	ROOFING
RGH.	ROUGH
RM.	ROOM
RND.	ROUND
R.O.	ROUGH OPENING
SCHED.	SCHEDULE
S.C.	SEALED CONCRETE
SCR.	SCREW
SECT.	SECTION
SEL.	SELECT
SHG.	SHEATHING
SHT.	SHEET
SDG.	SIDING
SIM.	SIMILAR
SLDG.	SLIDING
SM.	SMOOTH
SPEC.	SPECIFICATION
SQ.	SQUARE
ST.	STAINED
STD.	STANDARD
S.S. / ST.STL.	STAINLESS STEEL
STRUC.	STRUCTURE
SUSP.	SUSPENDED
SW.BD.	SWITCHBOARD
SYS.	SYSTEM
T.	TREAD
T.C.	TOP OF CURB
T.G.	TEMPERED GLASS
T.O.	TOP OF
T.S.D.	TOP OF STEEL DECK
T.W.	TEACHERS WARDROBE
TYP.	TYPICAL
U.N.O.	UNLESS NOTED OTHERWISE
V.	VENT
VERT.	VERTICAL
V.G.	VERTICAL GRAIN
VEST.	VESTIBULE
V.C.T.	VINYL COMPOSITION TILE
VCP	VITREOUS CLAY PIPE
W.W.M.	WELDED WIRE MESH
W.C.	WATER CLOSET
W.H.	WATER HEATER
W.F.	WIDE FLANGE
W/	WITH
W/O	WITHOUT
WD.	WOOD
WDW.	WINDOW
W.W.	WINDOW WALL

LOCATION PLAN

SHEET INDEX

SHEET NUMBER	SHEET NAME
CIVIL	
C1.0	SITE PLAN
C2.0	CONSTRUCTION DETAILS
ARCHITECTURE	
A110	OVERALL ARCHITECTURAL SITE PLAN
A120	ENLARGED ARCHITECTURAL SITE PLAN
A510	OVERALL EXTERIOR ELEVATIONS
A600	BUILDING SECTIONS
STRUCTURAL	
S001	STRUCTURAL GENERAL NOTES
S100	FOUNDATION PLAN
S101	ROOF FRAMING PLAN
S300	FRAMING DETAILS
ELECTRICAL	
E001	ELECTRICAL SYMBOLS LEGEND
E101	OVERALL ELECTRICAL SITE PLAN
E201	ENLARGED ELECTRICAL PLANS

LIST OF ALTERNATES

ALTERNATE 1: (NOT USED)

ALTERNATE 2: PROVIDE WATERPROOF DUPLEX RECEPTACLE AT EACH COLUMN, TYP.; SEE ELECTRICAL

ALTERNATE 3: DELETE PV PANEL SYSTEM AND ADD STANDING SEAM METAL ROOF

ALTERNATE 4: ADD GUTTER AND DOWNSPOUTS

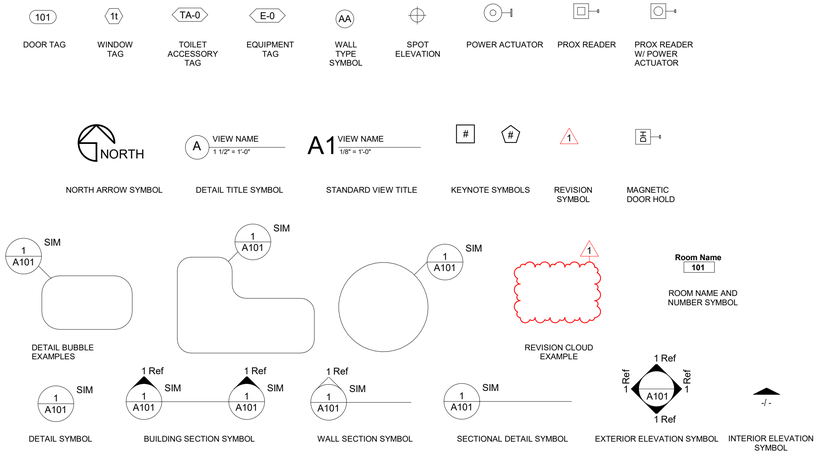

SYMBOLS
1/4" = 1'-0"

BranchPattern
Phone: 800-200-9160
www.branchpattern.com
BETTER BUILT ENVIRONMENTS

ACI BOLAND ARCHITECTS

BOB D. CAMPBELL & CO.
Structural Engineers Since 1957
4338 Belleview Ave 816.531.4144
Kansas City, MO 64111 www.bdc-engrs.com

BHC
Civil Engineering | Surveying | Utilities | Construction Services
7101 College Blvd., Ste. 400
Overland Park, KS 66210
o: (913) 663-1900

PROJECT NAME:
JEFFERSON BARRACKS
COVERED PARKING - BUILDING 41
41 MAY ROAD
ST. LOUIS, MO 63125

Seal:

These drawing and the designs here illustrated are the sole property of BranchPattern, Inc. and may not be reproduced in whole or in part without express written permission.

Description	Date

Designed By: TM
Drawn By: TM
Reviewed By: KM
Project No: 1218003
Date: 07/02/2024
Submittal Level: 100% CD

Sheet Title:
COVER SHEET

Sheet No.:
A000

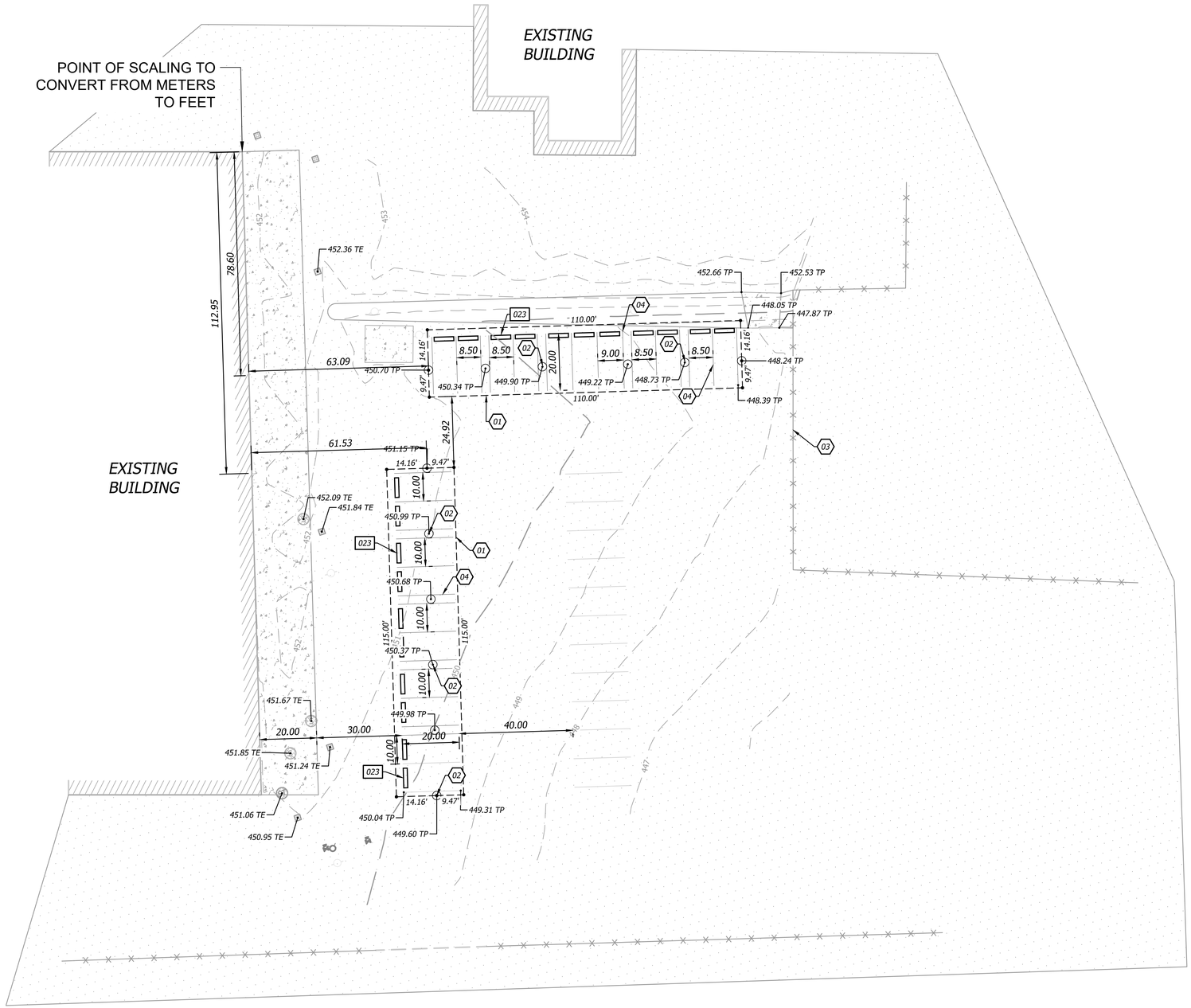

SITE NOTES

1. All existing parking striping under proposed canopies are to be removed and repainted as shown.
2. Project Survey was created using meters & converted into feet with a factor of 1 meter = 3.28084 feet
3. All utilities are to remain & not to be disturbed.
4. All striping locations were estimated using Google Earth, Contractor to repaint lines if needed.
5. All existing stalls are 10' x 20'

SITE LEGEND

- *EXISTING BUILDING*
- *EXISTING ASPHALT PAVEMENT*
- *EXISTING PCC PAVEMENT*
- *PROPOSED CANOPY*

00 CONSTRUCTION NOTES

01 PROPOSED CANOPY; REFER TO STRUCTURAL PLANS.
02 PROPOSED 36" DIA. COLUMNS, TYP.; REFER TO STRUCTURAL PLANS.
03 EXISTING FENCE, DO NOT DISTURB.
04 LEAD FREE, WATER-BORNE EMULSION BASED TRAFFIC PAINT FOR PARKING LOT STRIPING (WHITE ON ASPHALT & YELLOW ON CONCRETE).

000 DETAILS

SEE CONSTRUCTION DETAILS - SHEETS C2.0
017 STEEL/CONCRETE BOLLARD; CONTRACTOR TO COORDINATE WITH OWNER ON LOCATION.
023 CONCRETE WHEEL STOP

DETAILED GRADING LEGEND

0000.00 TP TOP OF EXISTING PAVEMENT ELEVATION
0000.00 TE TOP ELEVATION OF EXISTING STRUCTURE

GRADING LEGEND

- *980 EXISTING GRADE MAJOR CONTOURS*
- *982 EXISTING GRADE MINOR CONTOURS*

GRAPHIC SCALE
20 0 20

BranchPattern
Phone: 800-200-9160
www.branchpattern.com
BETTER BUILT ENVIRONMENTS

ACI BOLAND ARCHITECTS

BOB D. CAMPBELL & CO.
Structural Engineers Since 1957
4338 Belleview Ave. 816.531.4144
Kansas City, MO 64111 www.bdc-engrs.com

PHC
Civil Engineering | Surveying | Utilities | Construction Services
7101 College Blvd., Ste. 400
Overland Park, KS 66210
o: (913) 663-1900

PROJECT NAME:
JEFFERSON BARRACKS
COVERED PARKING - BUILDING 41
41 MAY ROAD
ST. LOUIS, MO 63125

Seal:

STATE OF MISSOURI
AUSTIN K LAGE
07/12/2024
NUMBER PE-2021029127
PROFESSIONAL ENGINEER

These drawing and the designs here illustrated are the sole property of BranchPattern, Inc. and may not be reproduced in whole or in part without express written permission.

Description	Date

Designed By: DM
Drawn By: DM
Reviewed By: AKL
Project No: 040220
Date: 07/02/2024
Submittal Level: 100% CD
Sheet Title: SITE PLAN
Sheet No.: C1.0

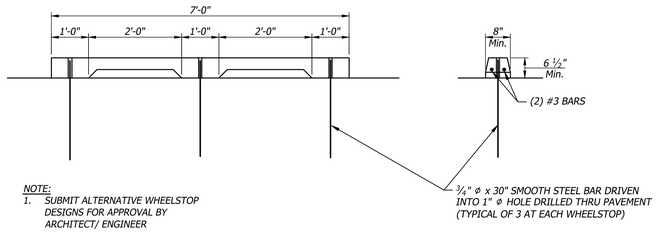

NOTE:
1. SUBMIT ALTERNATIVE WHEELSTOP DESIGNS FOR APPROVAL BY ARCHITECT/ ENGINEER

FRONT ELEVATION

END SECTION

023 Concrete Wheelstop
Not to Scale

GENERAL NOTES:
1. CONSTRUCTED OF STEEL NOT LESS THAN 4" IN DIAMETER AND CONCRETE FILLED.
2. SET NOT LESS THAN 3' DEEP IN A CONCRETE FOOTING OF NOT LESS THAN A 15" DIAMETER.
3. SET WITH THE TOP OF THE POST NOT LESS THAN 4' ABOVE GROUND.
4. LOCATED NOT LESS THAN 3' FROM THE PROTECTED OBJECT.

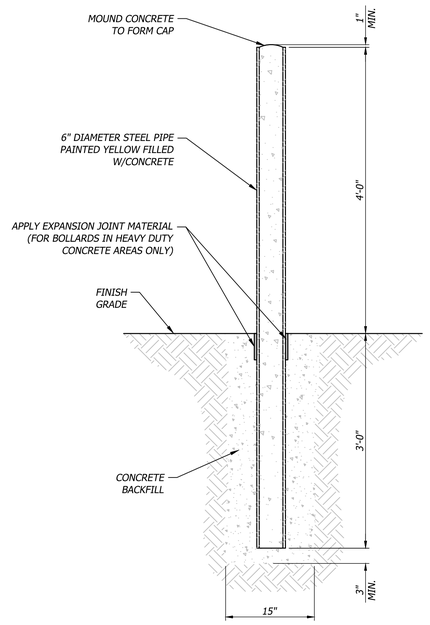

017 Steel/Concrete Bollard
Not to Scale

BranchPattern
Phone: 800-200-9160
www.branchpattern.com
BETTER BUILT ENVIRONMENTS

ACI BOLAND ARCHITECTS

BOB D. CAMPBELL & CO.
Structural Engineers Since 1957
4338 Belleview Ave. 816.531.4144
Kansas City, MO 64111 www.bdc-engrs.com

Civil Engineering | Surveying | Utilities | Construction Services
7101 College Blvd., Ste. 400
Overland Park, KS 66210
o: (913) 663-1900

PROJECT NAME:
JEFFERSON BARRACKS
COVERED PARKING - BUILDING 41
41 MAY ROAD
ST. LOUIS, MO 63125

Seal:

STATE OF MISSOURI
AUSTIN K. LAGE
07/12/2024
NUMBER PE-2021029127
PROFESSIONAL ENGINEER

These drawing and the designs here illustrated are the sole property of BranchPattern, Inc. and may not be reproduced in whole or in part without express written permission.

Description	Date

Designed By: DM
Drawn By: DM
Reviewed By: AKL
Project No: 040220
Date: 07/02/2024
Submittal Level: 100% CD
Sheet Title: CONSTRUCTION DETAILS
Sheet No.: C2.0

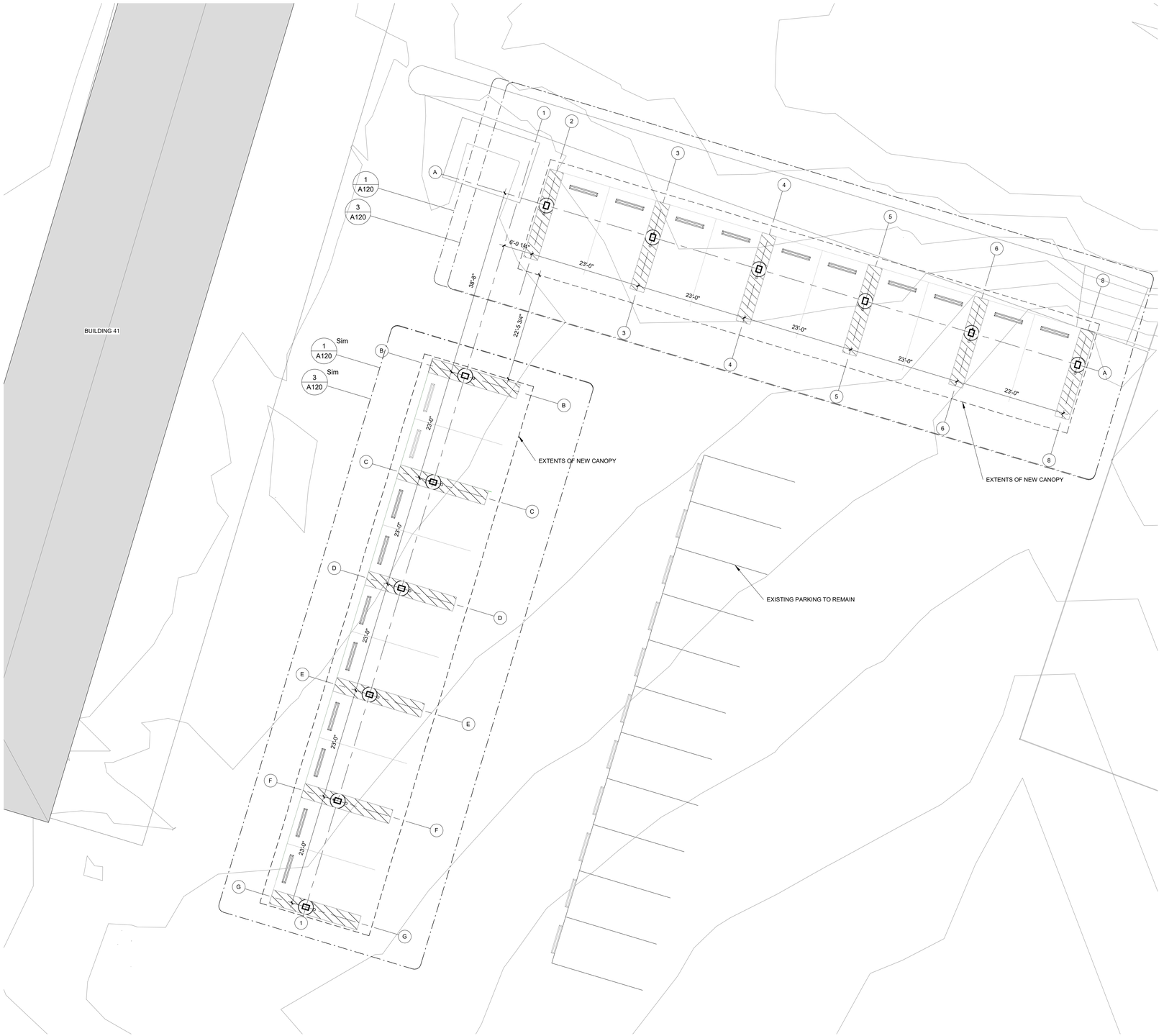

1 SITE PLAN
3/32" = 1'-0"

NORTH

BranchPattern
Phone: 800-200-9160
www.branchpattern.com
BETTER BUILT ENVIRONMENTS

ACI BOLAND ARCHITECTS

BOB D. CAMPBELL & CO.
Structural Engineers Since 1957
4338 Belleview Ave 816.531.4144
Kansas City, MO 64111 www.bdc-engrs.com

BHC
Civil Engineering | Surveying | Utilities | Construction Services
7101 College Blvd., Ste. 400
Overland Park, KS 66210
o: (913) 663-1900

PROJECT NAME:
JEFFERSON BARRACKS
COVERED PARKING - BUILDING 41
41 MAY ROAD
ST. LOUIS, MO 63125

Seal:

Douglas B Loveland
Architect
MO A-2008011817

These drawing and the designs here illustrated are the sole property of BranchPattern, Inc. and may not be reproduced in whole or in part without express written permission.

Description	Date

Designed By: TM
Drawn By: TM
Reviewed By: KM
Project No: 1218003
Date: 07/02/2024
Submittal Level: 100% CD

Sheet Title:
OVERALL ARCHITECTURAL SITE PLAN

Sheet No.:
A110

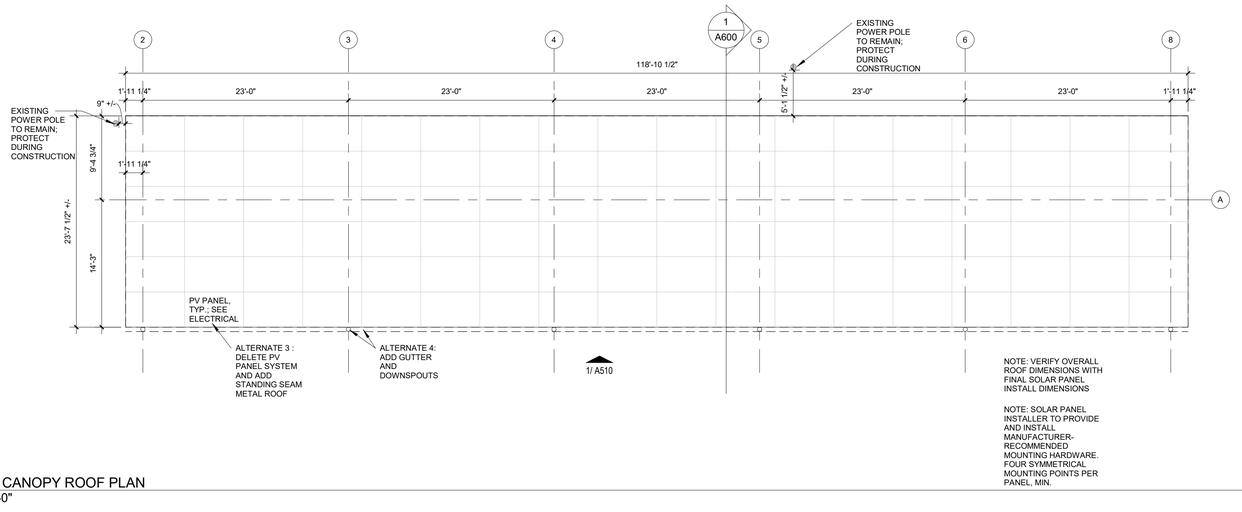

3 NORTH CANOPY ROOF PLAN
1/8" = 1'-0"

NORTH

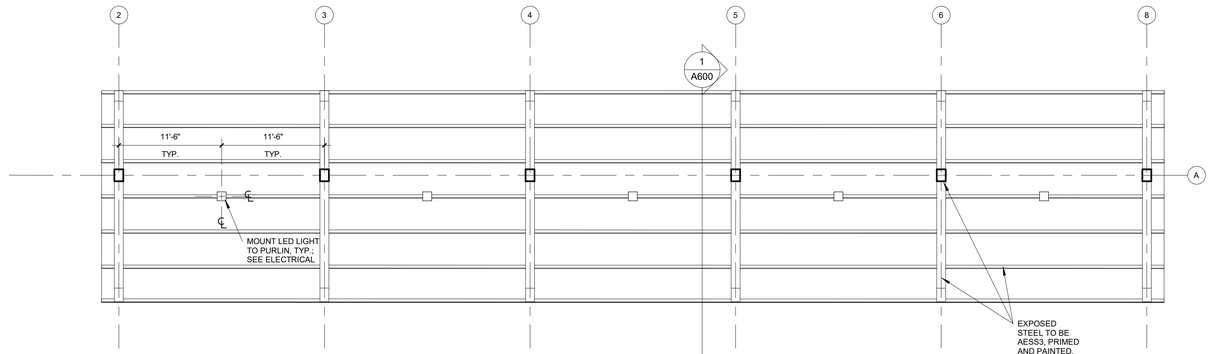

2 NORTH CANOPY REFLECTED CEILING PLAN
1/8" = 1'-0"

NORTH

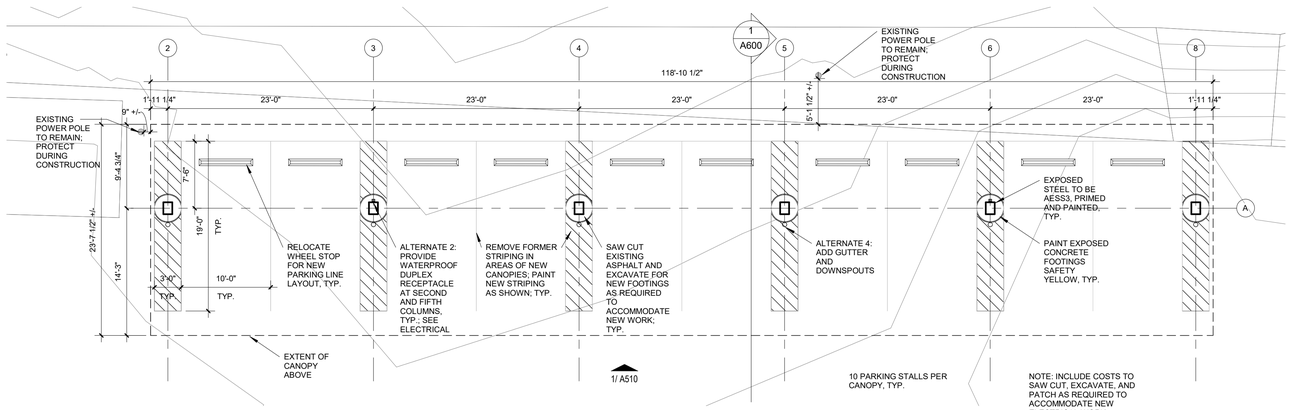

1 NORTH CANOPY PARKING PLAN
1/8" = 1'-0"

NORTH

GENERAL PLAN NOTES

1. WORK SHALL BE PERFORMED IN ACCORDANCE WITH ADA REQUIREMENTS AND APPLICABLE LOCAL, STATE, AND FEDERAL BUILDING CODES AND REGULATIONS.
2. THE CONTRACTOR IS RESPONSIBLE FOR OBTAINING NECESSARY BUILDING PERMITS.
3. THE GENERAL CONTRACTOR AND SUBCONTRACTORS SHALL FIELD VERIFY EXISTING CONDITIONS AND NOTIFY THE ARCHITECT OF ANY INCONSISTENCIES OR DISCREPANCIES WITH THE PROJECT DOCUMENTS. ACCESS TO THE SITE AND/OR SPACE UNDER CONSTRUCTION DURING BIDDING AND CONSTRUCTION SHALL BE COORDINATED WITH THE OWNER.
4. UPON VERIFICATION OF THE EXISTING CONDITIONS, THE CONTRACTOR SHALL DETERMINE AND RECOMMEND THE BEST ACTION TO MINIMIZE THE EXTENT OF REMOVAL WORK FOR INSTALLATION OF NEW WORK.
5. IF MATERIAL SUSPECTED OF CONTAINING HAZARDOUS MATERIALS ARE ENCOUNTERED, DO NOT DISTURB. IMMEDIATELY NOTIFY ARCHITECT AND OWNER. OWNER SHALL COORDINATE WITH CONTRACTOR ON THE REMOVAL OF SUCH ITEMS. WORK MAY PROCEED AFTER HAZARDOUS MATERIAL HAS BEEN REMOVED.
6. CONTRACTOR TO PROVIDE ALL REQUIRED LABOR, MATERIAL, AND EQUIPMENT NECESSARY TO MEET AND COMPLETE THE REQUIREMENTS OF THE NEW CONSTRUCTION.
7. EXISTING CONSTRUCTION TO REMAIN SHALL BE PATCHED, REPAIRED, AND PREP AS REQUIRED FOR NEW FINISH APPLICATION.
8. DO NOT CLOSE OR OBSTRUCT WALKWAYS, EXITS, OR OTHER FACILITIES USED BY OCCUPANTS OF BUILDINGS WITHOUT WRITTEN PERMISSION FROM AUTHORITIES HAVING JURISDICTION
9. CONDUCT OPERATIONS IN A SAFE WORKING MANNER TO PREVENT DAMAGE OR INJURY TO ADJACENT SPACES, BUILDING, STRUCTURE, OTHER FACILITIES, AND PERSONS.
10. REFER TO GENERAL NOTES, LEGENDS & SYMBOLS SHEET FOR ADDITIONAL GENERAL NOTES AS APPLICABLE.

BranchPattern
Phone: 800-200-9160
www.branchpattern.com
BETTER BUILT ENVIRONMENTS

ACI BOLAND ARCHITECTS

BOB D. CAMPBELL & CO.
Structural Engineers Since 1957
4338 Belleview Ave 816.531.4144
Kansas City, MO 64111 www.bdc-engrs.com

BHC
Civil Engineering | Surveying | Utilities | Construction Services
7101 College Blvd., Ste. 400
Overland Park, KS 66210
o: (913) 663-1900

PROJECT NAME:
JEFFERSON BARRACKS
COVERED PARKING - BUILDING 41
41 MAY ROAD
ST. LOUIS, MO 63125

Seal:

Douglas B Loveland
AZ #70567
MO A-2008011817

These drawing and the designs here illustrated are the sole property of BranchPattern, Inc. and may not be reproduced in whole or in part without express written permission.

Description	Date

Designed By: TM
Drawn By: TM
Reviewed By: KM
Project No: 1218003
Date: 07/02/2024
Submittal Level: 100% CD

Sheet Title:
ENLARGED ARCHITECTURAL SITE PLAN

Sheet No.:
A120

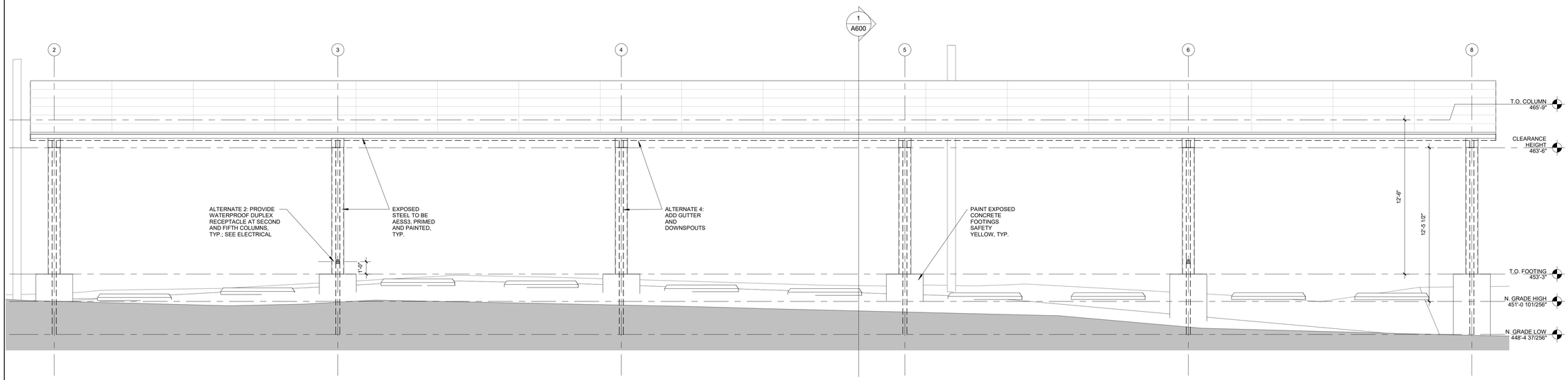

1 NORTH CANOPY - SOUTH ELEVATION
1/4" = 1'-0"

BranchPattern
Phone: 800-200-9160
www.branchpattern.com
BETTER BUILT ENVIRONMENTS

ACI BOLAND ARCHITECTS

BOB D. CAMPBELL & CO.
Structural Engineers Since 1957
4338 Belleview Ave. 816.531.4144
Kansas City, MO 64111 www.bdc-engrs.com

BHC
Civil Engineering | Surveying | Utilities | Construction Services
7101 College Blvd., Ste. 400
Overland Park, KS 66210
o: (913) 663-1900

PROJECT NAME:
JEFFERSON BARRACKS
COVERED PARKING - BUILDING 41
41 MAY ROAD
ST. LOUIS, MO 63125

Seal:
STATE OF MISSOURI
DOUGLAS B. LOVELAND
NUMBER A-2008011817
ARCHITECT
7/2/2024
Douglas B Loveland
Architect
MO A-2008011817

These drawing and the designs here illustrated are the sole property of BranchPattern, Inc. and may not be reproduced in whole or in part without express written permission.

Description	Date

Designed By: Designer
Drawn By: Author
Reviewed By: Checker
Project No: 1218003
Date: 07/02/2024
Submittal Level: 100% CD
Sheet Title: OVERALL EXTERIOR ELEVATIONS
Sheet No.: A510

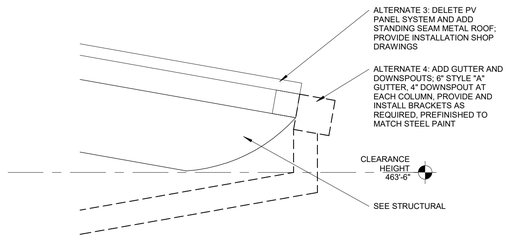

3 LOWER ROOF EDGE DETAIL
1" = 1'-0"

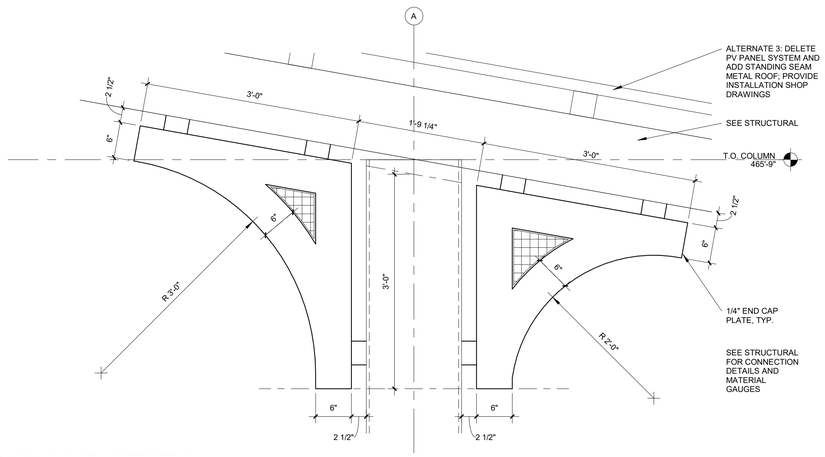

2 COLUMN BRACKET DETAIL
1" = 1'-0"

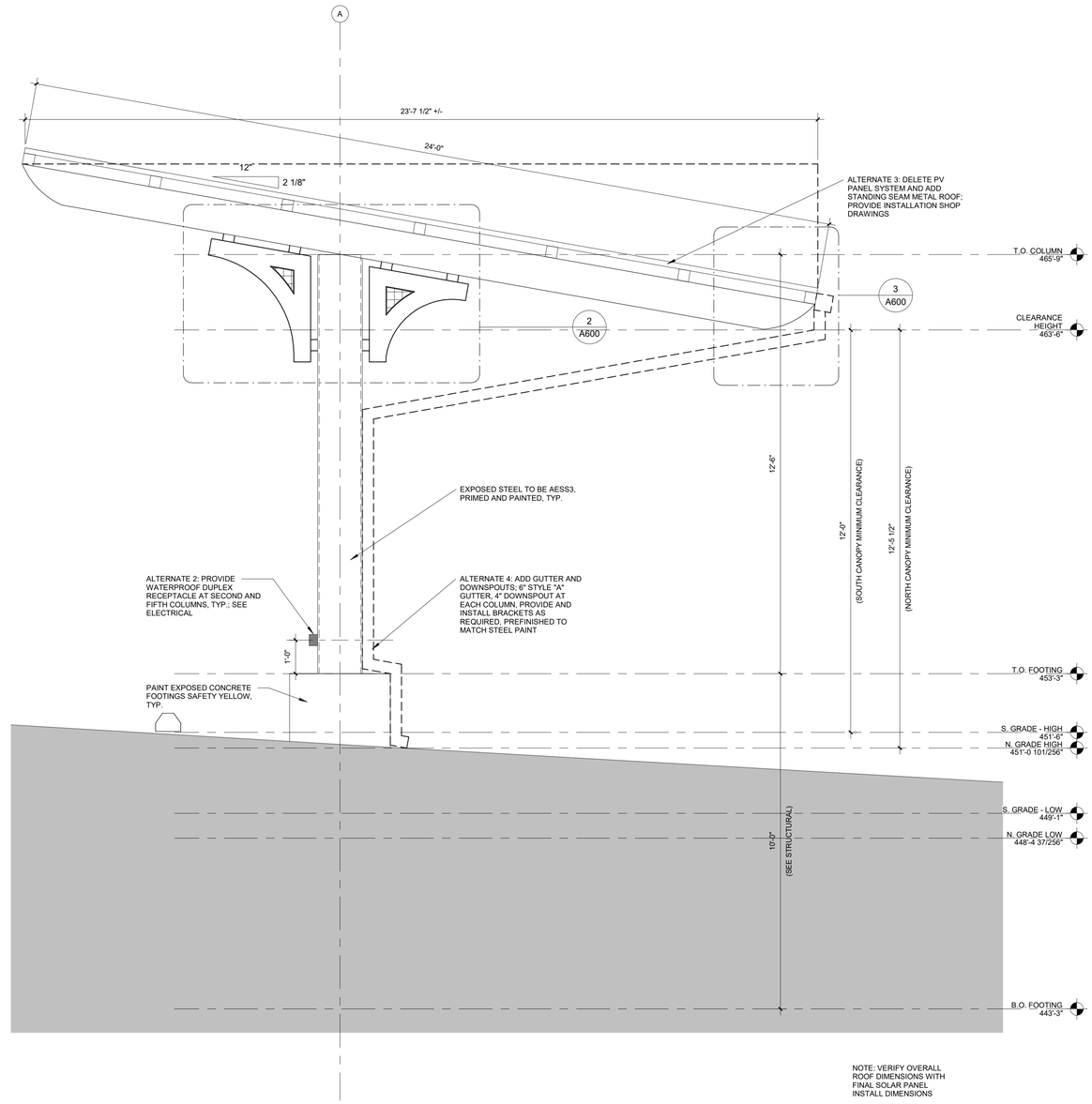

1 Section 4
1/2" = 1'-0"

BranchPattern
Phone: 800-200-9160
www.branchpattern.com
BETTER BUILT ENVIRONMENTS

ACI BOLAND ARCHITECTS

BOB D. CAMPBELL & CO.
Structural Engineers Since 1957
4338 Belleview Ave 816.531.4144
Kansas City, MO 64111 www.bdc-engrs.com

BHC
Civil Engineering | Surveying | Utilities | Construction Services
7101 College Blvd., Ste. 400
Overland Park, KS 66210
o: (913) 663-1900

PROJECT NAME:
JEFFERSON BARRACKS
COVERED PARKING - BUILDING 41
41 MAY ROAD
ST. LOUIS, MO 63125

Seal:

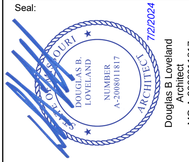

Douglas B Loveland
Architect
MO A-2008011817

These drawing and the designs here illustrated are the sole property of BranchPattern, Inc. and may not be reproduced in whole or in part without express written permission.

Description	Date

Designed By: TM
Drawn By: TM
Reviewed By: KM
Project No: 1218003
Date: 07/02/2024
Submittal Level: 100% CD

Sheet Title:
BUILDING SECTIONS

Sheet No.:
A600

GENERAL NOTES - STRUCTURAL

1. General Information

A. The contractor shall verify dimensions and conditions before construction and notify the engineer of any discrepancies, inconsistencies, or difficulties affecting the work before proceeding.
B. The contractor shall coordinate all disciplines, verifying size and location of all openings, whether shown on structural drawings or not, as called for on architectural, mechanical, or electrical drawings. In the case of work in an existing building the contractor shall scan existing structure to locate all rebar in the area of the new core/opening using ground penetrating radar and notify the engineer of record for review prior to coring/cutting. Conflicts, inconsistencies, or other difficulties affecting structural work shall be called to the architect or engineer's attention for direction before proceeding.
C. All design and construction work for this project shall conform to the requirements of the following governing design codes:
   1. International Building Code (IBC 2018) and referenced standards as amended by the city of St. Louis, MO
   2. Minimum Design Loads for Buildings and Other Structures (ASCE7-16)
   3. Specification for Structural Steel Buildings (AISC 360-16)
      Member Design Basis is Allowable Stress Design (ASD)
      Connection Design Basis is Allowable Stress Design (ASD)
   4. Structural Welding Code (AWS D1.4/D1.4M - 2017)
   5. Building Code Requirements for Structural Concrete (ACI 318-14)
   6. Building Code Requirements for Masonry Structures (TMS 402-16)
   7. North American Specification for the Design of Cold-Formed Steel Structural Members (AISI S100-16)
   8. National Design Specification (NDS) for Wood Constriction with 2018 Supplements (ANSI/AWC NDS-2018)
   9. Special Design Provisions for Wind and Seismic (AWC SDPWS-2015)
D. These drawings are for this specific project and no other use is authorized.

2. Structural Load Design Criteria

A. Roof Live = 20 psf; Roof Dead = 15 psf
B. Snow: Pg = 20psf, Pf =17psf, Is = 1.0, Ce = 1.0, Ct = 1.2, Drift per ASCE/SEI 7
C. Lateral Loads:
   1. Wind:
      - V = 108 mph, Exposure B
      - Occupancy [Risk] Category II, Iw=1.0 GCpi=+/-0.18
      - Design wind pressures to be used for the design of exterior component and cladding materials on the designated zones of wall and roof surfaces shall be per section 30.7 and Table 30.7-2 of ASCE/SEI 7. Tabulated pressures shall be multiplied by effective area reduction factors, exposure adjustment factors, and topographic factors where applicable
   2. Seismic:
      - Ss = 0.438, S1 = 0.157
      - Occupancy [Risk] Category II, Ie=1.0,
      - Site Classification D; Sds = 0.423; Sd1 = 0.239
      - Seismic Design Category D

3. Concrete

A. All concrete shall have a minimum design compressive strength of 4500 psi in 28 days, with not less than 560 pounds of cement per cubic yard of concrete, not over 5 gallons of water per 100 pounds of cement, with 6% +/- 1% air entrainment, and a maximum of 4 inches of slump.
B. The preceding minimum mix requirements may have water-reducing admixtures conforming to ASTM C494 added to the mix at manufacturer's dosage rates for improved workability.
C. The preceding minimum mix requirements may have up to 15% maximum of the cement content replaced with an approved ASTM C618 Class C fly ash, provided the total minimum cementitious content is not reduced.
D. Combined aggregate (coarse plus fine) for all concrete shall be well graded from coarsest to finest with no more than 18 percent and not less than 8 percent retained on an individual sieve, except that less than 8 percent may be retained on coarsest sieve and on No. 50 and finer sieves. Submit this gradation report with the concrete mix design shop drawings.
E. All concrete is reinforced concrete unless specifically called out as unreinforced. Reinforce all concrete not otherwise shown with same steel as in similar sections or areas. Any details not shown shall be detailed per ACI 315 and meet requirements of ACI 318, current editions.
F. Contractor shall verify that all concrete inserts, reinforcing and embedded items are correctly located and rigidly secured prior to concrete placement.
G. No aluminum items shall be embedded in any concrete.

4. Reinforcing Steel

A. All reinforcing steel shall conform to the requirements of ASTM A615 or A706 grade 60 steel. Welded plain wire fabric shall be supplied in sheets and conform to the requirements of ASTM A185.
B. Clear coverage of concrete over reinforcing steel shall be as follows:
   1. Concrete placed against earth: 3"
   2. Formed concrete against earth: 2"
   3. Slabs: 1"
   4. Beams or Columns: 1-1/2"
   5. Other 2"
   All coverage shall be nominal bar diameter minimum.
C. All dowels shall be the same size and spacing as adjoining main bars (splice lap 48 bar diameters or 24" minimum unless noted otherwise).
D. Bars marked continuous and all vertical steel shall be lapped 48 bar diameters (2'-0" minimum) at splices and embedments, unless shown otherwise. Splice top bars near midspan and splice bottom bars over supports, unless noted otherwise.
E. Accessories shall be as specified in latest edition of the ACI Detailing Handbook and the concrete Reinforcing Steel Institute Design Handbook. Maximum accessory spacing shall be 4'-0" on center, and all accessories on exposed surfaces are to have plastic coated feet.

5. Structural Steel

A. All structural steel beams and columns shall be ASTM A992, grade 50 steel and all miscellaneous steel shall be ASTM A36 grade steel (except at moment connections where plates shall be ASTM A572, grade 50). Hollow Structural Sections (HSS) shall be ASTM A500, grade C. Fabrication and erection shall be in accordance with AISC 303 "Code of Standard Practice for Steel Buildings and Bridges" in the referenced edition of the AISC Steel Construction Manual.
B. All welding shall conform to the recommendations of the AWS.
C. All exterior steel and connections shall be hot-dip galvanized.
D. All bolts not otherwise specified shall be 3/4" diameter high strength (ASTM A325-N). All bolts shall be fully pretensioned. All beam connections shall be designed per the AISC Manual of Steel Construction "Framed Beam Connections" for the indicated reactions or at least 0.4 x beam total shear capacity, Vn/Omega, shown in the maximum total uniform load tables, whichever is greater; and, shall account for eccentricity when the bolt line is more than 2" from the center of the support. All connections must be two bolt minimum. Additional connection elements may not be specifically shown in the conceptual details in this set but may be required by the final connection design, such as stiffener plates, doubler plates, supplement/reinforcing plates or other connection material. Connection design and shop drawing preparation shall be completed under the direct supervision of a professional engineer licensed in the state the project is located and shop drawings and connection calculations shall bear his/her seal.
E. All anchor bolts shall be 3/4" diameter, ASTM F1554, Grade 36 unless noted otherwise. Plate washers of minimum size and thickness for the given anchor diameter in Table 14-2 of the AISC Steel Construction Manual shall be provided at every column anchor bolt. Plate washers shall have a standard size hole for the anchor bolt. At braced frames, plate washers shall be welded all around to the column base plate with 3/16" fillet weld.
F. Design and installation of steel decking shall comply with the recommendations of the Steel Deck Institute (SDI). All decking shall be galvanized unless noted otherwise.
G. Allow 1.0 tons of structural steel to be used as directed in the field for special conditions by the engineer of record. Cost for shop drawings, fabrication, delivery, detailing, and erection to be included. 50% of structural steel allowance shall be bid as miscellaneous galvanized angle and plate.

6. Post-installed Anchors

A. Post-installed anchors shall be used only where specified on the drawings unless approved in writing by the engineer of record. See drawings for anchor diameter, spacing and embedment. Performance values of the anchors shall be obtained for specified products using appropriate design procedures and/or standards as required by the governing building code. Anchors installed in concrete shall have an ICC-ES Evaluation Service Report. Special inspection is required for all post installed anchors. The contractor shall coordinate an on-site meeting with the post installed anchor manufacturer field representative to educate the construction team on the anchor installation guidelines and requirements.
B. Mechanical anchors used in cracked and uncracked concrete shall have been tested and qualified for use in accordance with ACI 355.2 and ICC-ES AC193. All anchors shall be installed per the anchor manufacturer's written instructions.
C. Adhesive anchors used in cracked and uncracked concrete shall have been tested and qualified for use in accordance with ICC-ES AC308. All anchors shall be installed per the anchor manufacturer's written instructions.
D. Mechanical anchors used in solid grouted masonry shall have been tested and qualified for use in accordance with ICC-ES AC01. All anchors shall be installed per the anchor manufacturer's written instructions.
E. Adhesive anchors used in solid grouted masonry shall have been tested and qualified for use in accordance with ICC-ES AC58. All anchors shall be installed per the anchor manufacturer's written instructions.
F. Anchors used in hollow concrete masonry shall have been tested and qualified in accordance with ICC-ES AC106 or ICC-ES AC58 as appropriate. All anchors shall be installed per the anchor manufacturer's written instructions with appropriate screen tubes used for adhesives.

7. Foundations

A. Structural foundations consist of a network of straight shaft drilled piers (caissons established on highly weathered limestone capable of safely supporting 10 ksf end bearing.
B. Contractor shall provide for dewatering at excavations from either surface water or seepage.
C. All foundation excavations shall be inspected by a qualified soil engineer, approved by the architect and/or structural engineer, prior to placement of steel or concrete. This inspection shall be at the owner's expense.
D. All concrete in the structural portion retaining the backfill shall have attained its design strength prior to being backfilled.
E. Moisture content in soils beneath building locations should not be allowed to change after footing excavations and after grading for slabs on grade are completed. If subgrade materials become desiccated or softened by water or other conditions, recompact materials to the density and water content specified for engineered fill. Do not place concrete on frozen ground.

8. Shop Drawings and Deferred Submittals

A. Bob D. Campbell and Company, Inc. will review the General Contractor's (GC) shop drawings and related submittals (as indicated below) with respect to the ability of the detailed work, when complete, to be a properly functioning integral element of the overall structural system designed by Bob D. Campbell and Company, Inc.
B. Deferred submittals shall be submitted to the architect of record for review who shall forward to the building official for review and approval. Design calculations for deferred sub mittals shall be submitted at the same time as the shop drawings for review. Design calculations shall be prepared and sealed by a Professional Engineer licensed in the state of the project. The deferred submittal items shall not be installed until the deferred submittal documents have been approved by the building official.
C. Prior to submittal of a shop drawing or any related material to Bob D. Campbell and Company, Inc., the GC shall:
   1. Review each submission for conformance with the means, methods, techniques, sequences and operations of construction and safety precautions and programs incidental thereto, all of which are the sole responsibility of the GC.
   2. Review and approve each submission.
   3. Stamp each submission as approved.
D. Bob D. Campbell and Company, Inc. shall assume that no submission comprises a variation unless the GC advises Bob D. Campbell and Company, Inc. with written documentation.
E. Bob D. Campbell and Company, Inc. shall review shop drawings and related materials with comments provided that each submission has met the above requirements. Bob D. Campbell and Company, Inc. shall return without comment unrequired material or submissions without GC approval stamp.
F. Required shop drawings and related material (if any) are indicated below. Should Bob D. Campbell and Company, Inc. require more than ten (10) working days to perform the review, Bob D. Campbell and Company, Inc. shall so notify the GC.
   1. Concrete mix designs and material certificates including admixtures and compounds applied to the concrete after placement.
   2. Reinforcing steel shop drawings including erection drawings and bending details.Bar list will not be reviewed for correct quantities.
   3. Structural steel shop drawings including erection drawings and piece details. Include decking and connector submittals. Include miscellaneous framing specified on the structural drawings, but do not submit framing specified on non-structural drawings for Bob D. Campbell and Company, Inc. review.

10. Statement of Structural Special Inspections

A. The structural design for this project is based on completion of special inspections during construction in accordance with section 1704 of the International Building Code. The owner shall employ one or more qualified special inspectors to provide the required special inspections.
B. The special inspector shall furnish inspection reports to the building official, owner, architect and structural engineer, and any other designated person.
C. All discrepancies shall be brought to the immediate attention of the contractor for correction, then, if uncorrected, to the proper design authority, building official and structural engineer.
D. The special inspector shall submit a final signed report stating that the work requiring special inspection was, to the best of the inspector's knowledge, in conformance with the approved plans and specifications and the applicable workmanship provisions of the building code.
E. The following inspections and tests are required with the frequency (continuous or periodic) as defined within the referenced section or standard listed below. The General Contractor shall provide notification to the inspector when items requiring inspection are ready to be inspected and provide access for those inspections.
   1. Shop Fabrication – structural steel and steel bar joist per Section 1704.2.5 unless AISC certified shop
   2. Steel Construction per Section 1705.2 and the quality assurance requirements of AISC 341 Chapter J (as referenced by AISC 360)
   3. Concrete Construction per Section 1705.3 and Table 1705.3
      a. Reinforcing Steel Placement
      b. Cast in Place Anchors
      c. Design Mix Verification
      d. Concrete Sampling and Testing
      e. Concrete Placement
      f. Concrete Curing
   4. Verification of Soils per Table 1705.6
   5. Inspections and Tests of Cast-In-Place Deep Foundation per Table 1705.8

11. Copyright and Disclaimer

A. All drawings in the structural set (S-series drawings) are the copyrighted work of Bob D. Campbell and company, Inc. These drawings may not be photographed, traced, or copies in any manner without the written permission of Bob D. Campbell and Company, Inc. Exception: Original drawings may be printed for distribution to the owner, architect, and general contractor for coordination, bidding, and construction. Subcontractors may not reproduce these drawings for any purpose or in any manner.
B. I, Wayne E. Davis, P.E., registered engineer and a representative of Bob D. Campbell and Company, Inc., do hereby accept professional responsibility as required by the professional registration laws of this state for the structural design drawings consisting of S-series drawings. I hereby disclaim responsibility for all other drawings in the construction document package, they being the responsibility of other design professionals whose seals and signed statements may appear elsewhere in the construction document package.

STRUCTURAL ABBREVIATIONS

@	AT
&	AND
Ø	ROUND, DIAMETER
ADTL	ADDITIONAL
AFF	ABOVE FINISHED FLOOR
ALT	ALTERNATE
ARCH	ARCHITECTURAL
BLDG	BUILDING
B/	BOTTOM OF
BM	BEAM
BOTT	BOTTOM
BRG	BEARING
C	CAMBER
CD-#	CONCRETE DECK TYPE
CJ	CONSTRUCTION/CONTROL JOINT
CJP	COMPLETE JOINT PENETRATION
CL	CENTERLINE
CMU	CONCRETE MASONRY UNIT
COL	COLUMN
CONC	CONCRETE
CONN	CONNECTION
CONT	CONTINUOUS
COORD	COORDINATE
COV, CVR	COVER
DBL	DOUBLE
DET	DETAIL
DIA	DIAMETER
DIM	DIMENSION
DL	DEAD LOAD
DWG	DRAWING
EA	EACH
EF	EACH FACE
EJ	EXPANSION JOINT
EL, ELEV	ELEVATION
EMBED	EMBEDMENT, EMBEDDED
ENGR	ENGINEER
EOD	EDGE OF DECK
EOR	ENGINEER OF RECORD
EOS	EDGE OF SLAB
EQ	EQUAL
EQUIP	EQUIPMENT
EW	EACH WAY
EXP	EXPANSION
EXT	EXTERIOR
EXTG, EXIST	EXISTING
FD-#	FLOOR DECK TYPE
FDN	FOUNDATION
FF	FAR FACE
FIN	FINISH
FLR	FLOOR
FS	FAR SIDE
FTG	FOOTING
FV	FIELD VERIFY
GA	GAGE
GALV	GALVANIZE(D)
GEN	GENERAL
GR	GRADE
HORIZ	HORIZONTAL
HSS	HOLLOW STRUCTURAL SECTION
IF	INSIDE FACE
INFO	INFORMATION
INT	INTERIOR
JST	JOIST
JT	JOINT
K	KIPS (1000 LBS)
KSF	KIPS PER SQUARE FOOT
KSI	KIPS PER SQUARE INCH
LBS, #	POUNDS
Ld	DEVELOPMENT LENGTH
LL	LIVE LOAD
LLH	LONG LEG HORIZONTAL
LLV	LONG LEG VERTICAL
LONG	LONGITUDINAL
LSLT	LONG-SLOTTED HOLE TRANSVERSE
LTWT	LIGHTWEIGHT
M	MOMENT FORCE
MAX	MAXIMUM
MECH	MECHANICAL
MFGR	MANUFACTURER
MIN	MINIMUM
MISC	MISCELLANEOUS
MSRY	MASONRY
MTL	METAL
NF	NEAR FACE
NS	NEAR SIDE
NTS	NOT TO SCALE
NW	NORMAL WEIGHT
OC	ON CENTER
OF	OUTSIDE FACE
OPNG	OPENING
OPP	OPPOSITE
OVS	OVERSIZED HOLE
P	AXIAL FORCE
PAF	POWDER ACTUATED FASTENER
PC	PRECAST
PCF	POUNDS PER CUBIC FOOT
PEMB	PRE-ENGINEERED METAL BUILDING
PERP	PERPENDICULAR
PL	PLATE
PLF	POUNDS PER LINEAR FOOT
PJP	PARTIAL JOINT PENETRATION
PSF	POUNDS PER SQUARE FOOT
PSI	POUNDS PER SQUARE INCH
QTY	QUANTITY
RAD	RADIUS
RD-#	ROOF DECK TYPE
REF	REFERENCE
REINF	REINFORCEMENT
REQD	REQUIRED
REV	REVISION
RLL	ROOF LIVE LOAD
RTU	ROOF TOP UNIT
SC	SLIP CRITICAL
SCHED	SCHEDULE(D)
SECT	SECTION
SHT	SHEET
SIM	SIMILAR
SJ	SAW JOINT
SL	SNOW LOAD
SOG	SLAB-ON-GRADE
SOG-#	SLAB-ON-GRADE TYPE
SPCG	SPACING
SPEC	SPECIFICATION
SPRT	SUPPORT
SQ	SQUARE
SS	STAINLESS STEEL
SSLT	SHORT-SLOTTED HOLE TRANSVERSE
STD	STANDARD
STIFF	STIFFENER
STIR	STIRRUP
STL	STEEL
STRUCT	STRUCTURE, STRUCTURAL
T/	TOP OF
THRU	THROUGH
TOS	TOP OF STEEL, TOP OF SLAB
TRANS	TRANSVERSE
TYP	TYPICAL
UNO	UNLESS NOTED OTHERWISE
V	SHEAR FORCE
VERT	VERTICAL
W/	WITH
W/O	WITHOUT
WF	WIDE FLANGE
WL	WIND LOAD
WP	WORK POINT
WWF	WELDED WIRE FABRIC

LEGEND:

⟷ ..... SPAN DIRECTION OF DECK

RD-1 ..... 1½", 22ga GALVANIZED WIDE RIB ROOF DECK (3 SPAN CONTINUOUS) ATTACH TO STRUCTURE TO DEVELOP 325plf DIAPHRAGM SHEAR (ASD LOAD).

BranchPattern
Phone: 800-200-9160
www.branchpattern.com
BETTER BUILT ENVIRONMENTS

ACI BOLAND ARCHITECTS

BOB D. CAMPBELL & CO.
Structural Engineers Since 1957
4338 Belleview Ave. 816.531.4144
Kansas City, MO 64111 www.bdc-engrs.com

PHC
Civil Engineering | Surveying | Utilities | Construction Services
7101 College Blvd., Ste. 400
Overland Park, KS 66210
o (913) 663-1900

JEFFERSON BARRACKS

COVERED PARKING - BUILDING 41

41 MAY ROAD
ST. LOUIS, MO 63125

Seal:

7-2-24

These drawing and the designs here illustrated are the sole property of BranchPattern, Inc. and may not be reproduced in whole or in part without express written permission.

Description	Date

Designed By: TAJ
Drawn By: TAJ
Reviewed By: WED
Project No: 1218003
Date: 07/02/2024
Submittal Level: 100% CD

Sheet Title: GENERAL NOTES

Sheet No.: S001

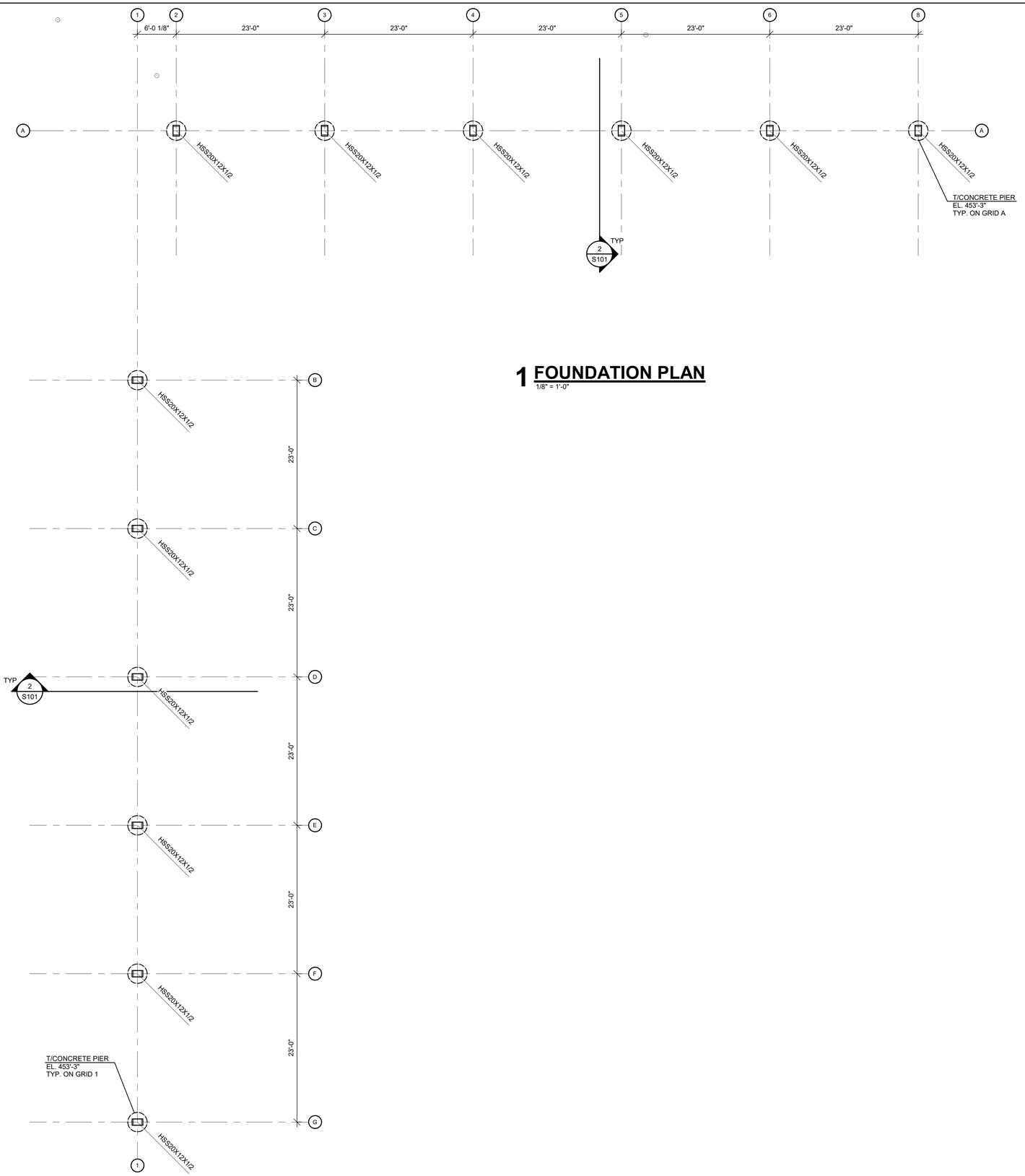

1 FOUNDATION PLAN

1/8" = 1'-0"

BranchPattern
Phone: 800-200-9160
www.branchpattern.com
BETTER BUILT ENVIRONMENTS

ACI BOLAND ARCHITECTS

BOB D. CAMPBELL & CO.
Structural Engineers Since 1957
4338 Belleview Ave 816.531.4144
Kansas City, MO 64111 www.bdc-engrs.com

BHC
Civil Engineering | Surveying | Utilities | Construction Services
7101 College Blvd., Ste. 400
Overland Park, KS 66210
o (913) 663-1900

JEFFERSON BARRACKS

COVERED PARKING - BUILDING 41

41 MAY ROAD
ST. LOUIS, MO 63125

Seal:

7-2-24

These drawing and the designs here illustrated are the sole property of BranchPattern, Inc. and may not be reproduced in whole or in part without express written permission.

Description	Date

Designed By: TAJ

Drawn By: TAJ

Reviewed By: WED

Project No: 1218003

Date: 07/02/2024

Submittal Level: 100% CD

Sheet Title: FOUNDATION PLAN

Sheet No.: S100

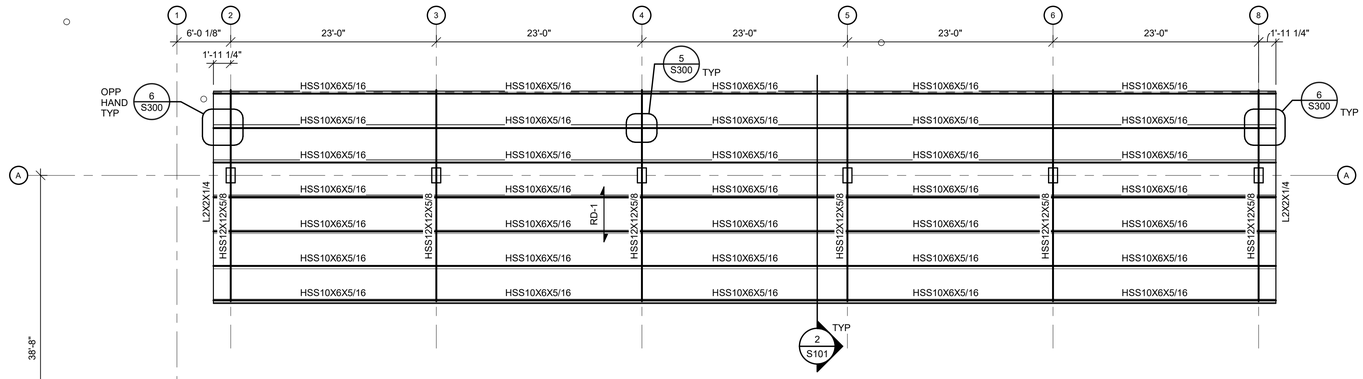

1 ROOF FRAMING PLAN

1/8" = 1'-0"

NOTES:
1. REFER TO GENERAL NOTES AND LEGEND ON SHEET S001.
2. ALL STEEL AND CONNECTION COMPONENTS TO BE HOT DIPPED GALVANIZED.

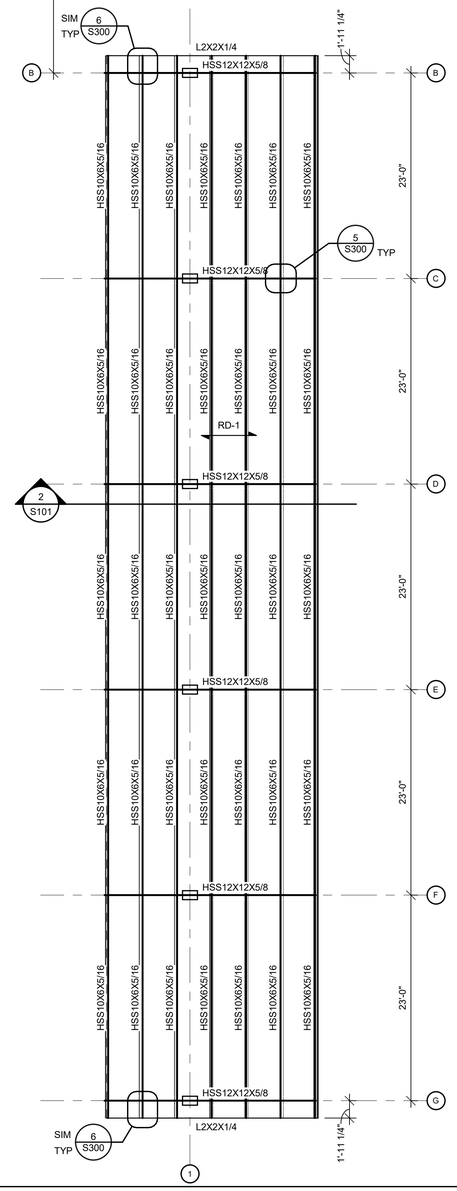

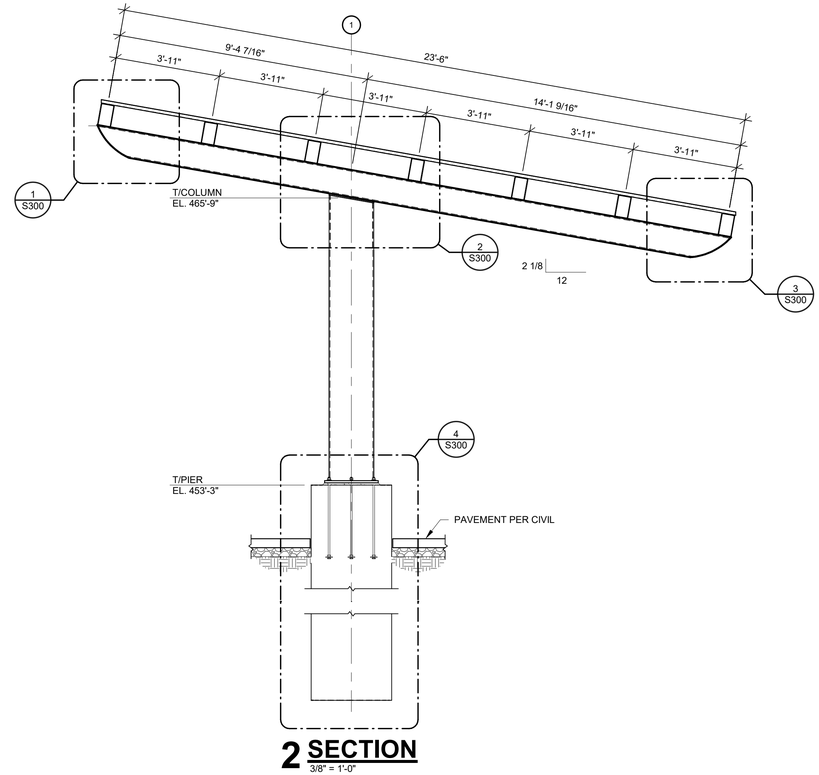

2 SECTION

3/8" = 1'-0"

BranchPattern
Phone: 800-200-9160
www.branchpattern.com
BETTER BUILT ENVIRONMENTS

ACI BOLAND ARCHITECTS

BOB D. CAMPBELL & CO.
Structural Engineers Since 1957
4338 Belleview Ave 816.531.4144
Kansas City, MO 64111 www.bdc-engrs.com

BHC
Civil Engineering | Surveying | Utilities | Construction Services
7101 College Blvd., Ste. 400
Overland Park, KS 66210
o (913) 663-1900

JEFFERSON BARRACKS

COVERED PARKING - BUILDING 41
41 MAY ROAD
ST. LOUIS, MO 63125

Seal:

7-2-24

These drawing and the designs here illustrated are the sole property of BranchPattern, Inc. and may not be reproduced in whole or in part without express written permission.

Description	Date

Designed By: TAJ
Drawn By: TAJ
Reviewed By: WED
Project No: 1218003
Date: 07/02/2024
Submittal Level: 100% CD

Sheet Title: ROOF FRAMING PLAN

Sheet No.: S101

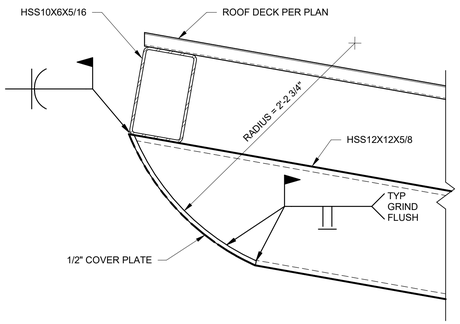

1 SECTION
1 1/2" = 1'-0"

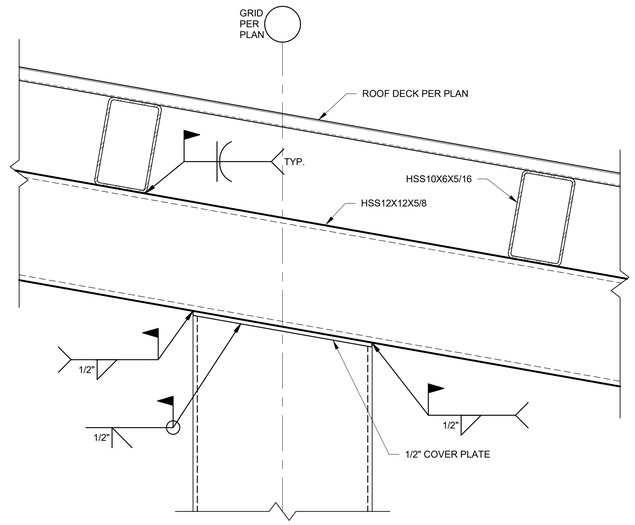

2 SECTION
1 1/2" = 1'-0"

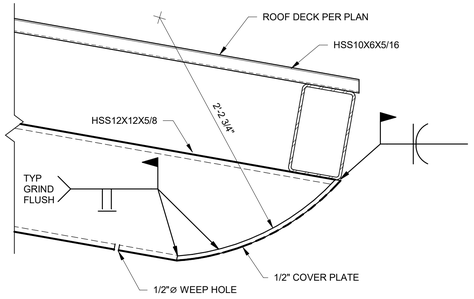

3 SECTION
1 1/2" = 1'-0"

4 SECTION
3/4" = 1'-0"

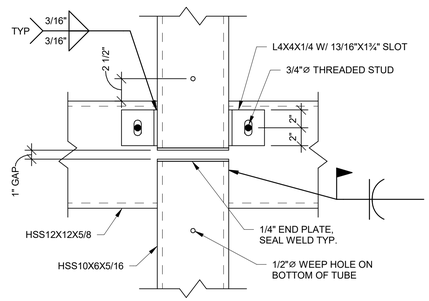

5 SECTION
1 1/2" = 1'-0"

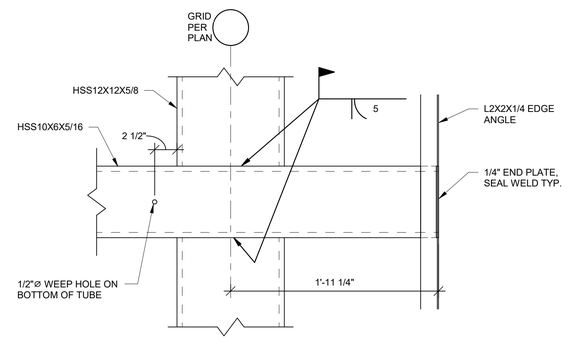

6 SECTION
1 1/2" = 1'-0"

BranchPattern
Phone: 800-200-9160
www.branchpattern.com
BETTER BUILT ENVIRONMENTS

ACI BOLAND ARCHITECTS

BOB D. CAMPBELL & CO.
Structural Engineers Since 1957
4338 Belleview Ave 816.531.4144
Kansas City, MO 64111 www.bdc-engrs.com

PROJECT NAME:
JEFFERSON BARRACKS
COVERED PARKING - BUILDING 41
41 MAY ROAD
ST. LOUIS, MO 63125

Seal:

7-2-24

These drawing and the designs here illustrated are the sole property of BranchPattern, Inc. and may not be reproduced in whole or in part without express written permission.

Description	Date

Designed By: TAJ
Drawn By: TAJ
Reviewed By: WED
Project No: 1218003
Date: 07/02/2024
Submittal Level: 100% CD
Sheet Title: FRAMING DETAILS
Sheet No.: S300

ELECTRICAL LEGEND

THIS IS A MASTER SYMBOLS LIST. ALL SYMBOLS, ABBREVIATIONS, ETC. MAY NOT NECESSARILY BE USED ON ALL DRAWINGS

ELECTRICAL

PANELBOARD, ELECTRICAL DISTRIBUTION PANEL, OR LOAD CENTER SURFACE MOUNTED

PANELBOARD, ELECTRICAL DISTRIBUTION PANEL, OR LOAD CENTER RECESS MOUNTED

SUBSCRIPTS ADJACENT DEVICES INDICATE THE FOLLOWING:

G = GFCI
T = TAMPER RESISTANT
AC = MOUNT 6" ABOVE COUNTER OR BACKSPLASH
USB = DEVICE WITH USB CHARGING PORT
WP = WEATHER PROOF
H = HOSPITAL GRADE
UC = MOUNT 12" UNDER COUNTER

20 AMP, 125V, NEMA 5-20R DUPLEX RECEPTACLE

JUNCTION BOX, WALL MOUNTED

JUNCTION BOX, FLOOR MOUNTED

JUNCTION BOX, CEILING MOUNTED

SPECIAL RECEPTACLE, FLOOR MOUNTED, CONFIGURATION AS NOTED ON PLAN

SPECIAL RECEPTACLE, WALL MOUNTED, CONFIGURATION AS NOTED ON PLAN

SPECIAL RECEPTACLE, CEILING MOUNTED, CONFIGURATION AS NOTED ON PLAN

PP — POWER (SERVICE) POLE

HEAVY DUTY SAFETY SWITCH, NON-FUSED

HEAVY DUTY FUSED DISCONNECT

COMBINATION STARTER/DISCONNECT (SIZE AS INDICATED)

COMBINATION DISCONNECT, WITH RECEPTACLE, REFER TO DRAWING FOR SIZE

NOTE: UPPER CASE LETTER DENOTES LUMINAIRES TYPE. LOWER CASE LETTER ADJACENT TO LUMINAIRE INDICATES SWITCH THAT CONTROLS LUMINAIRES. MOUNTING IS NOTED ON LUMINAIRE SCHEDULE

NORMAL POWER

PANEL XXX — PANEL

CURRENT TRANSFORMER, RATED AS SPECIFIED OR REQUIRED

SPD — SURGE PROTECTIVE DEVICE

GROUND CONNECTION

LSIG — CIRCUIT BREAKER, RATING AS SHOWN. LSIG DENOTES ELECTRONIC TRIP UNIT WITH ADJUSTABLE SETTINGS FOR: L= LONG TIME TRIP DELAY, S= SHORT TIME TRIP DELAY, I= INSTANTANEOUS, G= GROUND FAULT

800A3P — SWITCH, RATING AS SHOWN

400A FRN — FUSE, FUSE AMPACITY AND TYPE AS SHOWN

M — UTILITY METER (AS REQUIRED BY UTILITY)

T — TRANSFORMER NAME, SIZE, TYPE, AND RATING AS SHOWN

CONDUIT CONNECTION

G — CIRCUIT BREAKER WITH GROUND FAULT PROTECTION

G — FUSE WITH GROUND FAULT PROTECTION

GROUND CONNECTION WITH TEST WELL

GROUND ROD

POLE MOUNTED UTILITY TRANSFORMER

ST — SHUNT TRIP

X — SHORT CIRCUIT TAG DESIGNATION

XXXX — FEEDER TAG DESIGNATION

PHOTOVOLTAIC MODULE

DC-AC INVERTER

MISCELLANEOUS

X — KEY NOTE DESIGNATION

X — DEMOLITION KEY NOTE DESIGNATION

1A — REVISION NUMBER DESIGNATION

NEW TO EXISTING CONNECTION

DEMO TO EXISTING CONNECTION

XX — SPECIALTY EQUIPMENT (BY OTHERS)

CONDUIT DESIGNATIONS

XX-XXX — PANEL NAME - CIRCUIT NUMBER
BRANCH CIRCUITS HOMERUN USE NUMBER 12 AWG WIRE, UNLESS OTHERWISE NOTED. ALL CIRCUITS SHALL CONTAIN A GROUND AND NEUTRAL CONDUCTOR, UNLESS NOTED OTHERWISE. CONTRACTOR SHALL PROVIDE MULTI-WIRE CIRCUIT HANDLE TIES AS FINAL FIELD INSTALLED WIRING REQUIRES.

XX-# — PANEL NAME - CIRCUIT NUMBER
HOME RUNS SHALL USE #12 AWG WIRE UNO.

CONDUIT AND WIRE CONCEALED, 3/4" UNLESS OTHERWISE NOTED, CONDUIT USED FOR SWITCH LEGS, AND CONDUIT USED FOR CONTROL WIRING

CONDUIT AND WIRE EMBEDDED IN CONCRETE OR BELOW GRADE

CONDUIT TURNING DOWN

CONDUIT TURNING UP

CONDUIT CONTINUATION

CONDUIT CAPPED FOR FUTURE USE

TYPICAL MOUNTING HEIGHTS UNO

ARCHITECTURAL DRAWINGS SHALL TAKE PRECEDENCE OVER MOUNTING HEIGHTS INDICATED ON ELECTRICAL DRAWINGS. DIMENSION TO CENTERLINE UNO.

RECEPTACLES	18"
RECEPTACLES IN EQUIPMENT ROOMS	46"
RECEPTACLES (EXTERIOR)	24"
RECEPTACLES (GARAGES)	24"
ALARMS, SWITCHES AND CONTROLS	46"
SAFETY SWITCHES	46"
ADA DOOR OPENER	46"
STARTERS	48"
PANELS (TOP)	72"
FIRE ALARM PULL STATIONS (HANDLE)	44"
STROBES	96" OR 6" BELOW CEILING, WHICHEVER IS LOWER
FIRE ALARM BELLS (EXTERIOR)	12'-0"
FIRE ALARM CONTROL PANELS (TOP)	66"
ANNUNCIATION PANELS	48"
REMOTE INDICATING LIGHTS (EQUIPMENT ROOMS)	48"
REMOTE INDICATING LIGHTS (FINISHED AREAS)	CEILING
EXIT SIGNS (WALL MOUNTED BOTTOM)	6" ABOVE DOOR
MAXIMUM HEIGHT OF OPERABLE COMPONENTS	48" TO TOP
PHOTOCELLS	12'-0"

ABBREVIATIONS

A	AMPS, AIR (COMPRESSED)
AC	ABOVE COUNTER
AF	FUSE RATING
AFC	ABOVE FINISHED CEILING
AFCI	ARC FAULT CIRCUIT INTERRUPTER
AFEA	AREA FOR EVACUATION ASSISTANCE
AFF	ABOVE FINISHED FLOOR
AFG	ABOVE FINISHED GRADE
AIC	AMPERE INTERRUPTING CURRENT
AL	ALUMINUM
ATS	AUTOMATIC TRANSFER SWITCH
AWG	AMERICAN WIRE GAUGE
AV	AUDIO VISUAL
BFF	BELOW FINISHED FLOOR
BKR	BREAKER
BOS	BOTTOM OF STRUCTURE
BTU	BRITISH THERMAL UNIT
C	CONDUIT
CATV	CABLE TELEVISION SYSTEM
CCTV	CLOSED CIRCUIT TELEVISION
CKT	CIRCUIT
CLG	CEILING
CM	COFFEE MAKER
CT	CURRENT TRANSFORMER
CU	COPPER, CONDENSING UNIT
CW	CLOTHES WASHER
(D)	DEMOLISHED
DN	DOWN
DPDT	DOUBLE POLE, DOUBLE THROW
DPST	DOUBLE POLE, SINGLE THROW
DW	DISHWASHER
(E)	EXISTING
ECD	ELECTRIC CLOTHES DRYER
ENCL	ENCLOSURE
EPO	EMERGENCY POWER OFF
ETR	EXISTING TO REMAIN
EWC	ELECTRIC WATER COOLER
FBO	FURNISHED BY OTHERS
FF	FINISHED FLOOR
FHC	FIRE HOSE CABINET
FLA	FULL LOAD AMPS
FLR	FLOOR
FRZR	FREEZER
FVNR	FULL VOLTAGE, NON REVERSING
GD	GARBAGE DISPOSAL
GFCI	GROUND FAULT CIRCUIT INTERRUPTER
GFI	GROUND FAULT CIRCUIT INTERRUPTER (PERSONAL PROTECTION ON DEVICE)
GFP	GROUND FAULT PROTECTED FROM UPSTREAM
GFR	GROUND FAULT RELAY
GND	GROUND
HOA	HAND OFF AUTOMATIC
HP	HORSEPOWER
HPS	HIGH PRESSURE SODIUM
HTG	HEATING
HTR	HEATER
ISCA	AVAILABLE SHORT-CIRCUIT CURRENT (AMPS)
IG	ISOLATED GROUND
KCMIL	1000 CIRCULAR MILS
KV	KILOVOLT
KVA	KILOVOLT AMPS
KVAR	KILOVOLT AMPS REACTIVE
KW	KILOWATT
KWH	KILOWATT HOUR
LED	LIGHT EMITTING DIODE
LF	LINEAR FEET
LRA	LOCKED ROTOR AMPS
MATV	MASTER ANTENNA TELEVISION SYSTEM
MCA	MINIMUM CIRCUIT AMPACITY
MCB	MAIN CIRCUIT BREAKER
MCC	MOTOR CONTROL CENTER
MD	MOTORIZED DAMPER
MDP	MAIN DISTRIBUTION PANEL
MFP	MULTI-FUNCTION PRINTER
MFR	MANUFACTURER
MGB	MAIN GROUND BAR
MH	MANHOLE
MSB	MAIN SWITCHBOARD
MTD	MOUNTED
MW	MICROWAVE
(N)	NEW
N/A	NOT APPLICABLE
NIC	NOT IN CONTRACT
N/O,N/C	NORMALLY OPEN, NORMALLY CLOSED
N/L	NIGHT LIGHT
OC	ON CENTER
OV	OVEN
PBB	PRIMARY BONDING BAR
PDU	POWER DISTRIBUTION UNIT
PH ø	PHASE
PJ	PROJECTOR
PLOT	PLOTTER
PNL	PANEL
PRINT	PRINTER (SMALL)
PT	POTENTIAL TRANSFORMER
PV	PHOTOVOLTAIC
QTY	QUANTITY
(R)	RELOCATED
RA	RETURN AIR
RANGE	RANGE/STOVE
RCP	REFLECTED CEILING PLAN
REF	REFRIGERATOR
REV	REVISION
RH	RELATIVE HUMIDITY
RLA	RUNNING LOAD AMPS
RPM	REVOLUTIONS PER MINUTE
SA	SUPPLY AIR
SBB	SECONDARY BONDING BAR
SD	SMOKE DETECTOR
SF	SQUARE FEET
SPDT	SINGLE POLE, DOUBLE THROW
SPST	SINGLE POLE, SINGLE THROW
SP	STATIC PRESSURE
SWBD	SWITCHBOARD
TL	TWISTLOCK
TV	TELEVISION
TYP	TYPICAL
U/F	UNDERFLOOR
U/G	UNDERGROUND
U/S	UNDER SLAB
UL	UNDERWRITERS LABORATORIES, INC.
UNO	UNLESS NOTED OTHERWISE
UPS	UNINTERRUPTIBLE POWER SUPPLY
USB	RECEPTACLE W/ INTEGRATED USB PORT
V	VOLTAGE
VAC	VOLTS ALTERNATING CURRENT, VACUUM
VM	VENDING MACHINE
W	WATTS
W/	WITH
W/O	WITHOUT
WP	WEATHERPROOF
WT	WATERTIGHT, WEIGHT
XFMR	TRANSFORMER
XP	EXPLOSION PROOF

ELECTRICAL GENERAL NOTES

1. DO NOT SCALE DRAWINGS. VERIFY DIMENSIONS ON ARCHITECTURAL DRAWINGS AND IN FIELD PRIOR TO COMMENCEMENT OF WORK.
2. REVIEW ARCHITECTURAL, STRUCTURAL, AND OTHER DRAWINGS FOR ADDITIONAL SCOPE REQUIREMENTS PRIOR TO BID.
3. WORK SHALL BE PERFORMED IN A WORKMANLIKE MANNER TO THE SATISFACTION OF THE ARCHITECT/ENGINEER.
4. WORK, MATERIALS, AND EQUIPMENT SHALL CONFORM TO THE CURRENT ADOPTED EDITIONS OF LOCAL, STATE, AND NATIONAL CODES AND STANDARDS.
5. OBTAIN PERMITS AND INSPECTIONS REQUIRED.
6. FINAL CONNECTIONS TO EQUIPMENT SHALL BE IN ACCORDANCE WITH MANUFACTURER'S APPROVED WIRING DIAGRAMS, DETAILS, AND INSTRUCTIONS. IT IS THE CONTRACTOR'S RESPONSIBILITY TO PROVIDE MATERIALS AND EQUIPMENT COMPATIBLE WITH EQUIPMENT SUPPLIED.
7. CONTRACTOR SHALL REPLACE EQUIPMENT WHICH IS DAMAGED DUE TO INCORRECT FIELD WIRING PROVIDED UNDER THIS CONTRACT.
8. CONTRACTOR'S FAILURE TO ORDER OR RELEASE ORDER FOR MATERIALS AND/OR EQUIPMENT IN A TIMELY MANNER WILL NOT BE ACCEPTED AS A REASON TO SUBSTITUTE ALTERNATE MATERIALS, EQUIPMENT, OR INSTALLATION METHODS.
9. SYSTEMS SHALL BE COMPLETE, AND READY FOR CONTINUOUS OPERATION.
10. DEVICE BOXES SHALL BE MINIMUM 4" SQUARE.
11. PROVIDE NEW UPDATED TYPED PANELBOARD DIRECTORIES FOR PANELS MODIFIED OR INSTALLED AS A PART OF THIS PROJECT.
12. FINAL CONNECTIONS TO MOTORS, TRANSFORMERS, AND OTHER VIBRATING EQUIPMENT SHALL BE WITH FLEXIBLE CONDUIT AND APPROVED FITTINGS THAT DO NOT REDUCE THE USABLE INTERNAL DIAMETER OF THE CONDUIT. REFERENCE SPECIFICATIONS FOR SPECIFIC PRODUCTS. DO NOT SECURE CONDUITS, DISCONNECTS, OR DEVICES TO DUCTWORK OR MECHANICAL EQUIPMENT.
13. WHERE PANELS ARE INSTALLED FLUSH WITH WALLS, EMPTY CONDUITS SHALL BE EXTENDED FROM THE PANEL TO AN ACCESSIBLE SPACE ABOVE OR BELOW. A MINIMUM OF ONE 3/4" CONDUIT SHALL BE INSTALLED FOR EVERY THREE SINGLE POLE SPARE CIRCUIT BREAKERS OR SPACES, OR FRACTION THEREOF, BUT NOT LESS THAN TWO CONDUITS.
14. ELECTRICAL SYSTEMS COMPONENTS SHALL BE LISTED OR LABELED BY UL OR OTHER RECOGNIZED TESTING FACILITY.
15. PROVIDE AN INSULATED GROUND CONDUCTOR WITH EACH LINE VOLTAGE CIRCUIT.
16. PROVIDE A DEDICATED NEUTRAL CONDUCTOR FOR EACH BRANCH CIRCUIT REQUIRING A NEUTRAL CONDUCTOR. PROVIDE MULTI-POLE BREAKERS FOR EACH MULTI-WIRE BRANCH CIRCUIT SERVING EQUIPMENT OR FURNITURE.
17. PROVIDE FUSES SIZED PER MANUFACTURERS RECOMMENDATIONS.
18. COORDINATE THE EXACT MOUNTING LOCATIONS OF WALL AND FLOOR DEVICES WITH ARCHITECTURAL AND EQUIPMENT PLANS AND ELEVATIONS.
19. RACEWAYS SHALL NOT BE ROUTED HORIZONTALLY ABOVE ROOF. RACEWAY SHALL PENETRATE ROOF AT LOCATION OF EQUIPMENT SERVED.

ELECTRICAL REMODEL NOTES

1. REMOVE BOLD ITEMS INDICATED ON PLAN. ITEMS INDICATED WITH (E) ARE EXISTING TO REMAIN. MAINTAIN CIRCUITING TO EXISTING ITEMS OR RECIRCUIT AS INDICATED ON PLANS.
2. EXISTING INFORMATION INDICATED ON THE DRAWINGS HAS BEEN TAKEN FROM OWNER FURNISHED DRAWINGS AND / OR LIMITED FIELD OBSERVATIONS. THE ELECTRICAL CONTRACTOR SHALL FIELD VERIFY EXISTING CONDITIONS PRIOR TO BIDDING AND PROVIDE REMOVAL AND/OR RELOCATION OF EXISTING CONDUITS, CONDUCTORS, DEVICES, FIXTURES, OR OTHER EQUIPMENT AS INDICATED ON THE PLANS OR AS REQUIRED TO COORDINATE WITH THE NEW WORK.
3. REFER TO ARCHITECTURAL DEMOLITION DRAWINGS FOR LOCATION AND EXTENT OF DEMOLITION REQUIRED. PROVIDE ELECTRICAL DEMOLITION REQUIRED. CONTRACTOR SHALL VISIT SITE PRIOR TO BID TO DETERMINE EXTENT OF WORK INVOLVED. PROVIDE LABOR AND MATERIALS AS REQUIRED TO MAINTAIN AND/OR RESTORE CONTINUITY OF SERVICE TO EXISTING CIRCUITS.
4. REMOVE EXISTING UNUSED CONDUIT, WIRE, CABLE, JUNCTION BOXES, DEVICES, LIGHTS, FIRE ALARM COMPONENTS, AND ELECTRICAL APPURTENANCES, COMPLETE WITH ASSOCIATED CIRCUITING TO SOURCE. WHERE IT IS NOT FEASIBLE TO REMOVE THE ABOVE, DEVICE AND WIRE SHALL BE REMOVED, RACEWAY ABANDONED, AND BLANK COVER PLATES PROVIDED.
5. SYSTEM OUTAGES SHALL BE PERMITTED ONLY AT TIMES APPROVED BY OWNER, IN WRITING. WORK WHICH COULD RESULT IN AN ACCIDENTAL OUTAGE (BEYOND BRANCH CIRCUITS) SHALL BE PERFORMED WITH THE OWNER'S MAINTENANCE PERSONNEL ADVISED OF SUCH WORK.
6. WHERE THE REUSE OF EXISTING RACEWAYS, CONDUCTORS, DEVICES, ETC. IS PERMISSIBLE, VERIFY THE CONDUCTORS ARE CONTINUOUS AND MODIFICATIONS IN THIS PHASE OF WORK WILL NOT RENDER EXISTING DEVICES OR JUNCTION BOXES INACCESSIBLE. RELOCATE JUNCTION BOXES OR DEVICES WHICH ARE MADE INACCESSIBLE FROM WORK PERFORMED. RESUPPORT EXISTING ITEMS AS REQUIRED BY CODE.
7. THE OWNER SHALL HAVE FIRST SALVAGE RIGHTS TO ITEMS REMOVED AS PART OF DEMOLITION. REMOVE AND PROPERLY DISPOSE OF DEMOLISHED ITEMS.
8. PROTECT STRUCTURE AND OWNER EQUIPMENT FROM DAMAGE. IMMEDIATELY REPLACE OR REPAIR, TO ORIGINAL CONDITION, DAMAGE CAUSED BY THE CONTRACTOR WHETHER EQUIPMENT APPEARS TO BE CURRENTLY IN USE OR NOT, UNLESS WRITTEN AUTHORIZATION FROM THE OWNER INDICATES OTHERWISE. PREPARE LISTING OF ALL EXISTING DAMAGED ITEMS AND SUBMIT TO OWNER PRIOR TO BEGINNING WORK.
9. FIELD LOCATE EXISTING UNDERGROUND PUBLIC AND OWNER UTILITIES AND BUILDING GROUNDING / LIGHTNING PROTECTION SYSTEMS PRIOR TO ANY EXCAVATION. REPLACE OR REPAIR DAMAGED UTILITIES AND GROUNDING TO ORIGINAL CONDITION.
10. IF SUSPECTED HAZARDOUS MATERIALS ARE ENCOUNTERED IN ANY EXISTING BUILDING COMPONENTS THAT WILL BE DISTURBED DURING THE PROJECT, IMMEDIATELY NOTIFY OWNER/ARCHITECT PRIOR TO DISRUPTION OF THE MATERIAL.

GRID INTERACTIVE PHOTOVOLTAIC (PV) SYSTEM SUMMARY

SYSTEM SIZE	122.4 KW (DC) (+/- 8%)
INVERTER RATIO (DC:AC)	1.2 (+/- 5%)
MINIMUM ANNUAL ENERGY	170 MWHR (YEAR 1)
PV MODULE	MONOCRYSTALLINE OR THIN FILM SOLAR CELLS, BOD: FIRST SOLAR, FS-6450A
INVERTER	CPS, SCA 25 KTL-DO/US-208
ORIENTATION	10 DEGREE TILT
RACKING	ATTACH TO COVERED PARKING STRUCTURE
POINT OF CONNECTION	BUILDING 41 SERVICE ENTRANCE PANEL
INTERCONNECTION VOLTAGE	208V - 3 PHASE
DESIGN WIND LOAD	90 MPH
NATIONAL ELECTRIC CODE	2023 EDITION

BranchPattern
Phone: 800-200-9160
www.branchpattern.com
BETTER BUILT ENVIRONMENTS

ACI BOLAND ARCHITECTS

BOB D. CAMPBELL & CO.
Structural Engineers Since 1957
4338 Belleview Ave. 816.531.4144
Kansas City, MO 64111 www.bdc-engrs.com

PHC
Civil Engineering | Surveying | Utilities | Construction Services
7101 College Blvd., Ste. 400
Overland Park, KS 66210
o (913) 663-1900

PROJECT NAME:
JEFFERSON BARRACKS
COVERED PARKING - BUILDING 41
41 MAY RD.
ST. LOUIS, MO 63125

Seal:

STATE OF MISSOURI
ABHINAV PANDEY
NUMBER PE-2010015824
07/02/2024
PROFESSIONAL ENGINEER

These drawing and the designs here illustrated are the sole property of BranchPattern, Inc. and may not be reproduced in whole or in part without express written permission.

Description	Date

Designed By: AP
Drawn By: BP
Reviewed By: BP
Project No: 1218003
Date: 07/02/2024
Submittal Level: 100% CD
Sheet Title: ELECTRICAL SYMBOL LEGEND
Sheet No.: E001

2 EXISTING EXTERIOR ELEVATION
SCALE: NONE

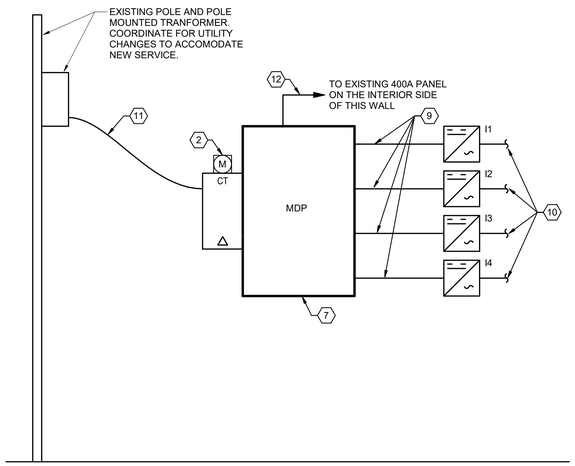

3 PARTIAL BUILDING ONE-LINE DIAGRAM
SCALE: 1/8" = 1'-0"

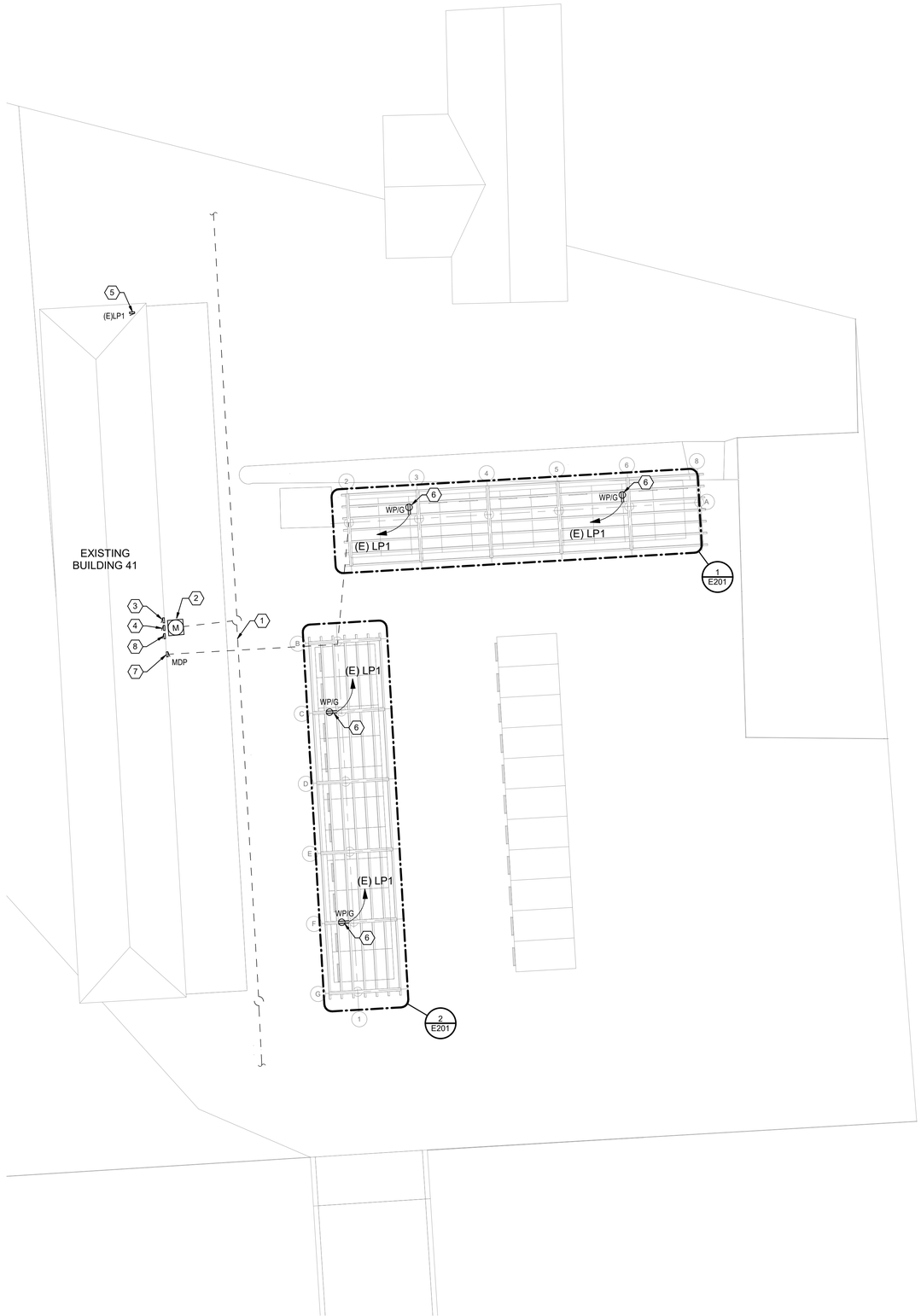

N

1 OVERALL ELECTRICAL SITE PLAN
SCALE: 1" = 20'-0"

GENERAL NOTES (THIS SHEET)

1. REFER TO SHEET E001 FOR SYMBOL LEGEND AND GENERAL NOTES.

KEY NOTES ⓧ (THIS SHEET)

1. EXISTING OVERHEAD LINE TO REMAIN.
2. EXISTING UTILITY METER TO BE REPLACED WITH NEW BI-DIRECTIONAL NET ENERGY METER. COORDINATE REQUIREMENTS WITH UTILITY.
3. EXISTING 100A PANEL TO REMAIN.
4. EXISTING 400A MAIN SERVICE ENTRANCE PANEL TO REMAIN. RE-SUPPLY THIS PANEL FROM NEW EXTERIOR SERVICE ENTRANCE PANEL. REMOVE GROUND-TO-NEUTRAL BOND AND REMOVE ANY "SERVICE ENTRANCE LABEL".
5. EXISTING 225A, 208Y/120V BRANCHPANEL, LP1. USE EXISTING SPACES TO INSTALL NEW BREAKERS TO SUPPLY NEW RECEPTACLES AND LIGHTS.
6. PROVIDE GFCI PROTECTED, DUPLEX RECEPTACLE WITH EXTRA-DUTY IN-USE WEATHER PROOF COVER CIRCUITED TO EXISTING PANEL LP1 VIA NEW 20A/1P BREAKER. USE 3 #10 AWG CU IN 1/2" CONDUIT.
7. PROVIDE NEW SERVICE ENTRANCE PANEL "MDP". DISCONNECT EXISTING SERVICE DROP FROM EXISTING 400A MAIN SERVICE PANEL AND RE-SUPPLY NEW SERVICE ENTRANCE PANEL. PROVIDE NEW NET METER AND CT CABINET IAW AMEREN'S REQUIREMENTS. THIS PANEL RE-FEEDS EXISTING 400A PANEL VIA NEW 400A BREAKER AND RECEIVES PV ENERGY VIA (4) 90A/3P BREAKERS.
8. REMOVE AND REPLACE EXISTING CT CABINET FOR NEW SERVICE IN ACCORDANCE WITH UTILITY REQUIREMENTS.
9. (4) #1 AWG CU, #6G CU IN 1-1/2"C.
10. REFER TO PARTIAL PV ONE-LINE DIAGRAM.
11. TWO SETS OF (4) #400 AWG, CU WITH MIN 3" CONDUIT FOR VERICAL SEVICE LATERAL ALONG EXTERIOR WALL. PROVIDE NEW WEATHERHEAD. RE-USE OF EXISTING WEATHERHEAD AND CONDUIT IS ACCEPTABLE IF SIZE AND CONDITION IS SUITABLE FOR RE-USE.
12. TWO SETS OF (4) 3/0 AWG CU, #3 GND IN 2-1/2"C. RE-USE EXISTING PENETRATION.

BranchPattern
Phone: 800-200-9160
www.branchpattern.com
BETTER BUILT ENVIRONMENTS

ACI BOLAND ARCHITECTS

BOB D. CAMPBELL & CO.
Structural Engineers Since 1957
4338 Belleview Ave 816.531.4144
Kansas City, MO 64111 www.bdc-engrs.com

BHC
Civil Engineering | Surveying | Utilities | Construction Services
7101 College Blvd., Ste. 400
Overland Park, KS 66210
o: (913) 663-1900

PROJECT NAME:
JEFFERSON BARRACKS
COVERED PARKING - BUILDING 41
41 MAY RD.
ST. LOUIS, MO 63125

Seal:

These drawing and the designs here illustrated are the sole property of BranchPattern, Inc. and may not be reproduced in whole or in part without express written permission.

Description	Date

Designed By: AP
Drawn By: BP
Reviewed By: BP
Project No: 1218003
Date: 07/02/2024
Submittal Level: 100% CD

Sheet Title:
OVERALL ELECTRICAL SITE PLAN

Sheet No.:
E101

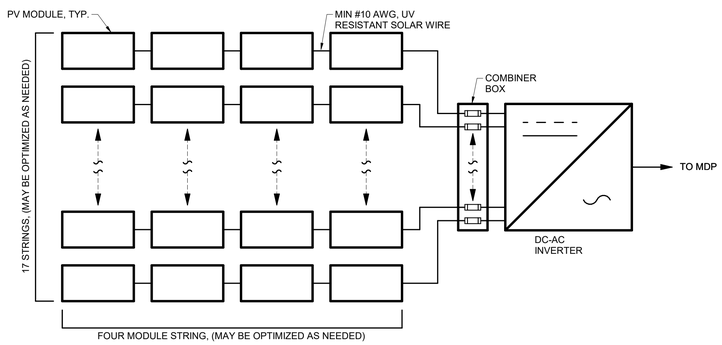

3 PV ONE-LINE DIAGRAM (TYP. OF 4 INVERTERS)

SCALE: 1/8" = 1'-0"

Panel: MDP

Location:
Supply From: UTILITY TRANSFORMER
Mounting: Surface
Enclosure: NEMA 3R
Phase Created: New Construction

Volts: 208Y/120V
Phases: 3
Wires: 4

K.A.I.C. Rating: 42
Mains Type: MCB
Mains / Design Rating: 600 A
Bus Rating: 800 A

Notes	CKT NO.	Circuit Description	Load Classification	Trip	Poles	A		B		C		Poles	Trip	Load Classification	Circuit Description	CKT NO.	Notes
	1					0	0									2	
	3	(E)LP1	E	400 A	3			0	0			3	90 A	Other	I1	4	
	5									0	0					6	
	7					0	0									8	
	9	I2	Other	90 A	3			0	0			3	90 A	Other	I3	10	
	11									0	0					12	
	13					0	0									14	
	15	I4	Other	90 A	3			0	0			3	60 A	E	SURGE PROTECTIVE DEVICE (SPD)	16	
	17									0	0					18	
	19					--	--									20	
	21	SPACE	--	--	3			--	--			3	--	--	SPACE	22	
	23									--	--					24	
				Total Load:		0 VA		0 VA		0 VA							
				Total Amps:		0 A		0 A		0 A							

Load Classification			Connected Load	Demand Factor	NEC Demand Load
L	Lighting				
C	Continuous		0 VA	0.00%	0 VA
R	Total Receptacle Load	1st 10,000 VA	0 VA	0%	0 VA
	0 VA	Remaining	0 VA	0%	0 VA
M	Total Motor Load	Largest Motor	0 VA	0.00%	0 VA
	0 VA	Remaining	0 VA	0.00%	0 VA
E	Equipment		0 VA	0.00%	0 VA
A	Appliance		0 VA	0.00%	0 VA
LC	Load Center (# of...	0	0 VA	0.00%	0 VA

Phase Balance	
%	A-B
%	B-C
%	C-A

Panel Totals

Connected Load (VA): 0 VA
NEC Demand Load (VA): 0 VA
Connected Load (A): 0 A
NEC Demand Load (A): 0 A
Spare Capacity (A): 600 A
Spare Capacity (%): 100

Notes:

GENERAL NOTES (THIS SHEET)

1. REFER TO SHEET E001 FOR SYMBOL LEGEND AND GENERAL NOTES.

KEY NOTES (X) (THIS SHEET)

1. 25 KW THREE PHASE STRING INTERVER. BASIS OF DESIGN: CPS, SCA 25KTL-DO/US-208. MOUNT WITH IN STRUCTURE, BELOW PV PANELS.
2. 450W, FIRST SOLAR , FS-6450A, PV MODULE, TYPICAL OF 136 MODULES PER PARKING STRUCTURE.
3. IP-66 RATED, FULLY ENCLOSED, GASKETED UNDER CANOPY LINEAR FIXTURES. BASIS OF DESIGN: LITHONIA: FEX-L48-12000LM-PPCL-WD-MVOLT-40K-80CRI-BAA WITH INTEGRAL PHOTOCELL AND OCCUPANCY SENSOR FOR BI-LEVEL DIMMING. TYP OF 10. ONE 20A CIRCUIT FROM EXISTING PANEL IN BUILDING 41 SUPPLIES ALL 10 LIGHT FIXTURES.
4. CIRCUIT TO EXISTING PANEL LP1 VIA NEW 20A/1P BREAKER. USE 3#10 AWG CU IN 1/2" CONDUIT.

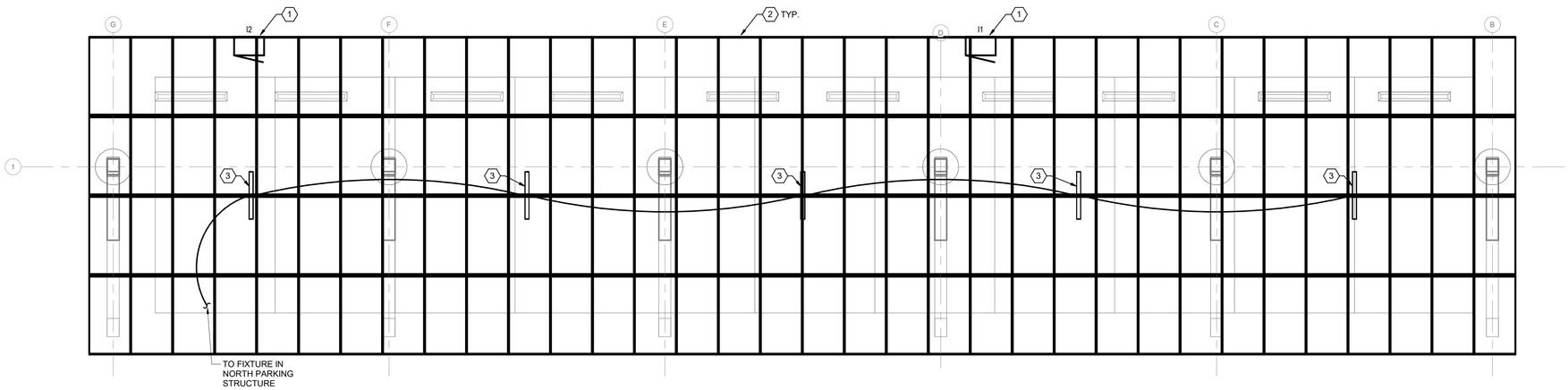

2 ENLARGED WEST COVERED PARKING STRUCTURE ELECTRICAL PLAN

SCALE: 3/16" = 1'-0"

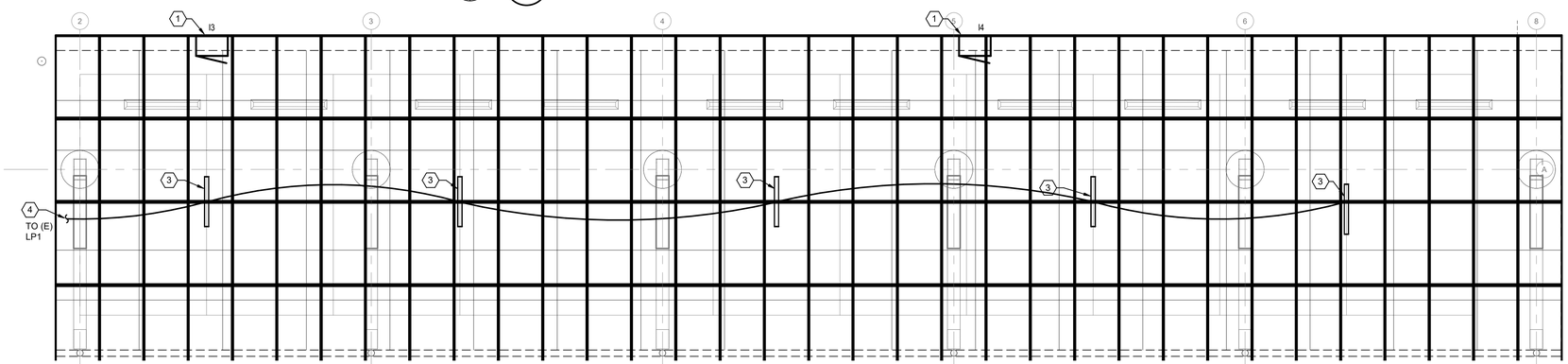

1 ENLARGED NORTH COVERED PARKING STRUCTURE ELECTRICAL PLAN

SCALE: 3/16" = 1'-0"

BranchPattern
Phone: 800-200-9160
www.branchpattern.com
BETTER BUILT ENVIRONMENTS

ACI BOLAND ARCHITECTS

BOB D. CAMPBELL & CO.
Structural Engineers Since 1957
4338 Belleview Ave 816.531.4144
Kansas City, MO 64111 www.bdc-engrs.com

BHC
Civil Engineering | Surveying | Utilities | Construction Services
7101 College Blvd., Ste. 400
Overland Park, KS 66210
o (913) 663-1900

PROJECT NAME:
JEFFERSON BARRACKS
COVERED PARKING - BUILDING 41
41 MAY RD.
ST. LOUIS, MO 63125

Seal:

These drawing and the designs here illustrated are the sole property of BranchPattern, Inc. and may not be reproduced in whole or in part without express written permission.

Description	Date

Designed By: AP
Drawn By: BP
Reviewed By: BP
Project No: 1218003
Date: 07/02/2024
Submittal Level: 100% CD
Sheet Title: ENLARGED ELECTRICAL PLANS
Sheet No.: E201