LID, WOODEN-SHEET METAL CONTAINER
152 X 52 1/4 X 1 1/8
D.L.A. MATERIAL NUMBER: 8115 N00004162

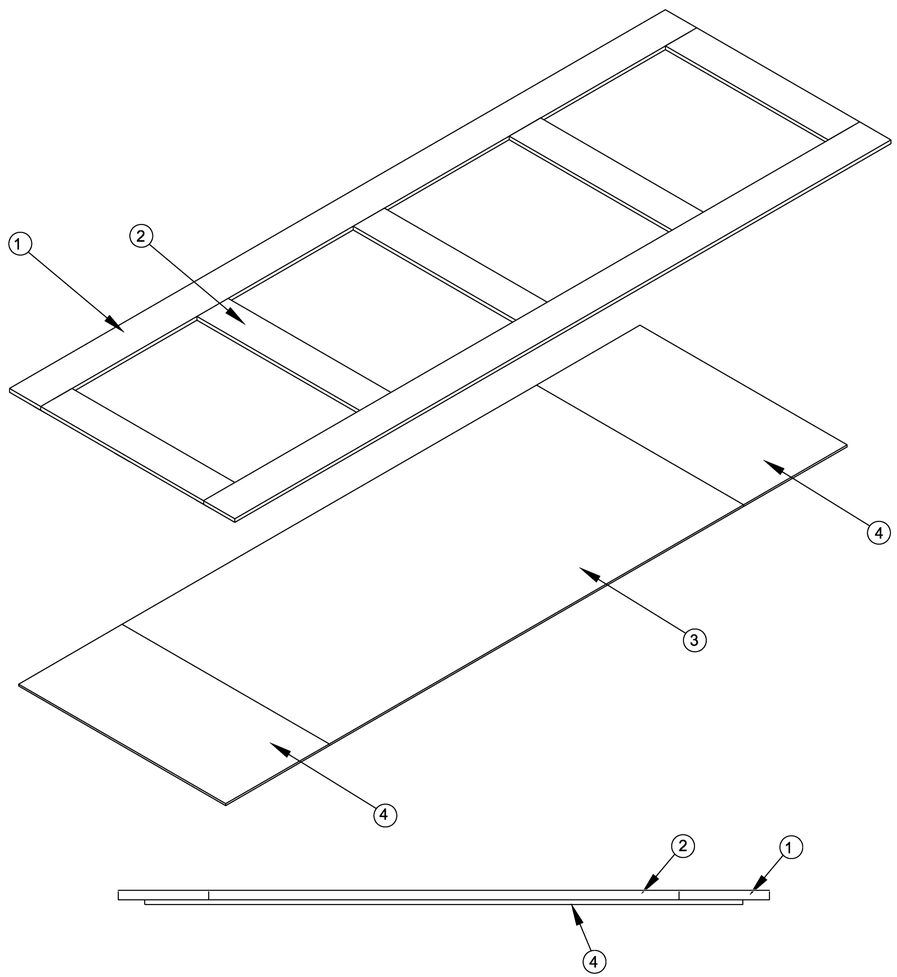

PART NO.	QUAN.	DESCRIPTION	SIZE
1	2	LUMBER	1 X 8 X 152
2	5	LUMBER	1 X 8 X 37 3/4 (TWO OUTSIDE, TWO ON PLYWOOD SEAMS, ONE CENTERED)
3	1	PLYWOOD	48 X 96 X 3/8 (CENTERED)
4	2	PLYWOOD	24 X 48 X 3/8 (LEFT/RIGHT OF FULL SHEET)

Information to Wood Sheet Metal Pallet Lid, DLA Material No. 8115 N 00004162

Packing Level: Commercial Packaging

Closure: Commercial Level, IAW ASTM B660-15, Sec. 8, FIG. 26 (Modified)

Or

PACKING: AS SPECIFIED BELOW AND BILL OF MATERIALS

LEVEL	SPEC	STYLE	CL	VRTY	GR
A	ASTM B660 - 15 (MODIFIED)	2 (Fig. 26, Mod.)			

DIMENSIONS: 152 X 53 X 3

WEIGHT: 25 LBS.

NOTES:

1) ALL WOODEN LUMBER, WOODEN PALLETS, AND WOODEN CONTAINERS PRODUCED ENTIRELY OR IN PART OF WOOD PACKING MATERIAL (WPM) SHALL BE CONSTRUCTED FROM DEBARKED WOOD IN ADDITION TO HEAT TREATED (HT) MATERIAL (HT 56 DEGREES CENTIGRADE OR 133 DEGREES FAHRENHEIT FOR 30 MINUTES). CERTIFICATION/MARKING IS REQUIRED BY AN ACCREDITED AGENCY RECOGNIZED BY THE AMERICAN LUMBER STANDARDS COMMITTEE (ALSC). FOR REFERENCE DOCUMENTATION, SEE INTERNATIONAL STANDARDS FOR PHYTOSANITARY MEASURES (LATEST REVISION OF ISPM NO.15) AND DOD 4140.01-M-1 COMPLIANCE FOR DEFENSE PACKAGING: PHYTOSANITARY REQUIREMENTS FOR WOOD PACKAGING MATERIAL (WPM) OFFICE. THIS INFORMATION CAN BE FOUND AT WWW.IPPC.INT

2) All plywood to be Voluntary Product Standard PS 1-07, Exterior Grade CC.

3) Fasteners attaching P/N 3 & 4 to P/N 1 & 2 shall be common, commercial grade 1" power driven staples.

4) Fasteners attaching P/N 2 to P/N 1 (at all 10 locations) shall be commercial grade 5/8” power driven corrugated fasteners. 2 each per location.

DISTRIBUTION: Distribution authorized to DoD and U.S. DoD contractors only, Administrative or Operational Use. Other requests for this document shall be referred to the Defense Logistics Agency, Ft. Belvoir, Virginia. Property of Defense Logistics Agency, Ft. Belvoir, Virginia.

NO.	REVISIONS	DRAWN BY	DATE

DEFENSE LOGISTICS AGENCY
NEW CUMBERLAND, PA 17070-5001

PROPOSED Wood Pallet Lid Sheet Metal Container Drawing
DEFENSE DEPOT Warner Robins, GA

DESIGNED BY:	APPROVED BY:	ACAD FILE:
DRAWN BY:	MECH/WOD ENGR _____	SHEET 1 OF 1
SCALE: Full Scale	DRAWING NUMBER: REV A	JULIAN DATE

PALLET, WOODEN–SHEET METAL CONTAINER
152 X 52 1/4 X 7 1/4
D.L.A. MATERIAL NUMBER: 8115 N00001822

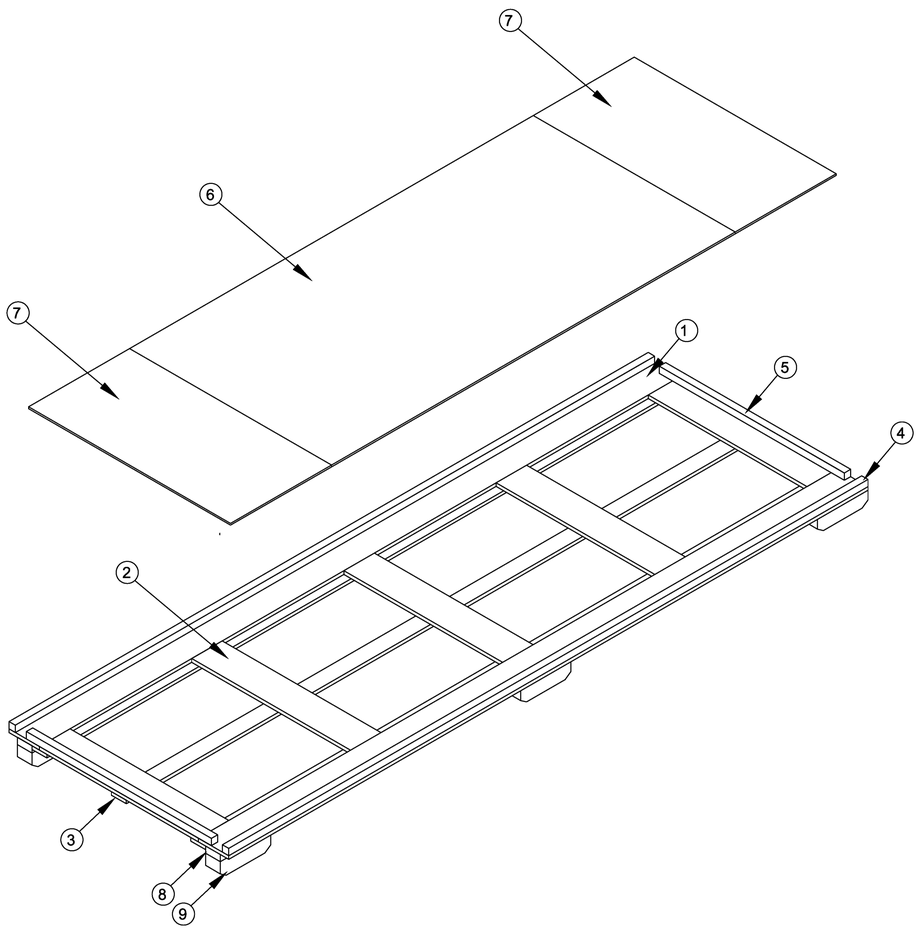

PART NO.	QUAN.	DESCRIPTION	SIZE
1	2	LUMBER	1 X 8 X 152
2	5	LUMBER	1 X 8 X 37 3/4 (TWO OUTSIDE, TWO ON PLYWOOD SEAMS, ONE CENTERED)
3	3	LUMBER	1 X 4 X 152 (ONE CENTER, 2 STRADDLE 1 X 8 SEAMS)
4	2	LUMBER	2 X 2 X 152 (TOP FRAME,SIDE)
5	2	LUMBER	2 X 2 X 44 (TOP FRAME, END)
6	1	PLYWOOD	48 X 96 X 3/8 (CENTERED)
7	2	PLYWOOD	24 X 48 X 3/8 (LEFT/RIGHT OF FULL SHEET)
8	6	RUB STRIPS	2 X 4 X 12
9	6	MITERED RUB STRIPS	4 X 4 X 12

Information to Sheet Metal Pallet 8115 N 0000 1822

Packing Level: Commercial Packaging

Closure: Commercial Level, IAW ASTM B660-15, Sec. 8, FIG. 26 (Modified)

Or

PACKING: AS SPECIFIED BELOW AND BILL OF MATERIALS

LEVEL	SPEC	STYLE	CL	VRTY	GR
A	ASTM B660 - 15 (MODIFIED)	2 (Fig. 26, Mod.)			

DIMENSIONS: 152 X 53 X 3

WEIGHT: 25 LBS.

NOTES:

1) ALL WOODEN LUMBER, WOODEN PALLETS, AND WOODEN CONTAINERS PRODUCED ENTIRELY OR IN PART OF WOOD PACKING MATERIAL (WPM) SHALL BE CONSTRUCTED FROM DEBARKED WOOD IN ADDITION TO HEAT TREATED (HT) MATERIAL (HT 56 DEGREES CENTIGRADE OR 133 DEGREES FAHRENHEIT FOR 30 MINUTES). CERTIFICATION/MARKING IS REQUIRED BY AN ACCREDITED AGENCY RECOGNIZED BY THE AMERICAN LUMBER STANDARDS COMMITTEE (ALSC). FOR REFERENCE DOCUMENTATION, SEE INTERNATIONAL STANDARDS FOR PHYTOSANITARY MEASURES (LATEST REVISION OF ISPM NO.15) AND DOD 4140.01-M-1 COMPLIANCE FOR DEFENSE PACKAGING: PHYTOSANITARY REQUIREMENTS FOR WOOD PACKAGING MATERIAL (WPM) OFFICE. THIS INFORMATION CAN BE FOUND AT WWW.IPPC.INT

2) All plywood to be Voluntary Product Standard PS 1-07, Exterior Grade CC.

3) Fasteners attaching P/N 3 & 4 to P/N 1 & 2 shall be common, commercial grade 1" power driven staples.

4) Fasteners attaching P/N 2 to P/N 1 (at all 10 locations) shall be commercial grade 5/8” power driven corrugated fasteners. 2 each per location.

DISTRIBUTION: Distribution authorized to DoD and U.S. DoD contractors only, Administrative or Operational Use. Other requests for this document shall be referred to the Defense Logistics Agency, Ft. Belvoir, Virginia. Property of Defense Logistics Agency, Ft. Belvoir, Virginia.

NO.	REVISIONS	DRAWN BY	DATE

DEFENSE LOGISTICS AGENCY

NEW CUMBERLAND, PA 17070-5001

PROPOSED Wood Pallet – Sheet Metal Container Drawing
DEFENSE DEPOT Warner Robins, GA

DESIGNED BY:	APPROVED BY:	ACAD FILE:
DRAWN BY:	MECH/MOD ENGR _____	SHEET 1 OF 1
SCALE: Full Scale	DRAWING NUMBER: REV A	JULIAN DATE

PALLET, WOODEN-SHEET METAL CONTAINER
152 X 52 1/4 X 7 1/4
D.L.A. MATERIAL NUMBER: 8115 N00001822

EXPLODED VIEW ref#'s noted below of this drawing set

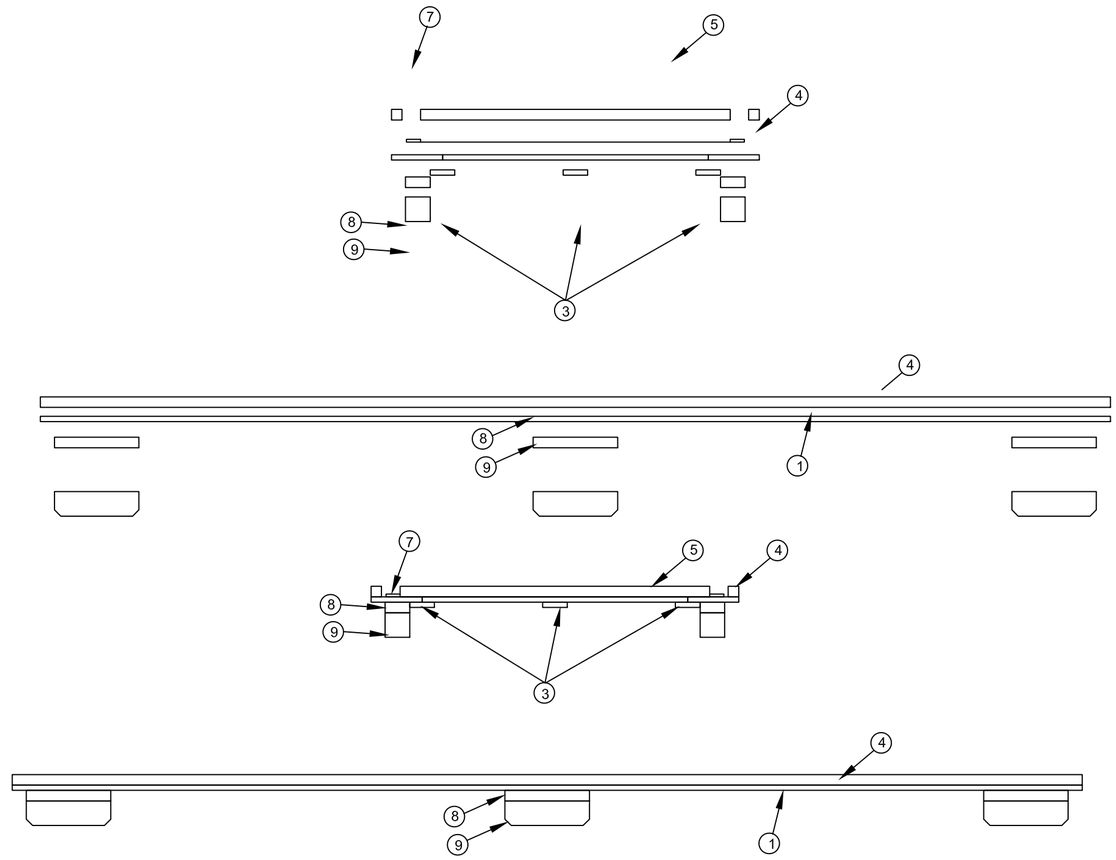

DISTRIBUTION: Distribution authorized to DoD and U.S. DoD contractors only, Administrative or Operational Use. Other requests for this document shall be referred to the Defense Logistics Agency, Ft. Belvoir, Virginia. Property of Defense Logistics Agency, Ft. Belvoir, Virginia.

PART NO.	QUAN.	DESCRIPTION	SIZE
1	2	LUMBER	1 X 8 X 152
2	5	LUMBER	1 X 8 X 37 3/4 (TWO OUTSIDE, TWO ON PLYWOOD SEAMS, ONE CENTERED)
3	3	LUMBER	1 X 4 X 152 (ONE CENTER, 2 STRADDLE 1 X 8 SEAMS)
4	2	LUMBER	2 X 2 X 152 (TOP FRAME,SIDE)
5	2	LUMBER	2 X 2 X 44 (TOP FRAME, END)
6	1	PLYWOOD	48 X 96 X 3/8 (CENTERED)
7	2	PLYWOOD	24 X 48 X 3/8 (LEFT/RIGHT OF FULL SHEET)
8	6	RUB STRIPS	2 X 4 X 12
9	6	MITERED RUB STRIPS	4 X 4 X 12

NO.	REVISIONS	DRAWN BY	DATE

DEFENSE LOGISTICS AGENCY
NEW CUMBERLAND, PA 17070-5001

PROPOSED Wood Pallet – Sheet Metal Container Drawing
DEFENSE DEPOT Warner Robins, GA

DESIGNED BY:	APPROVED BY:	ACAD FILE:
DRAWN BY:	MECH/MOD ENGR _____	SHEET 1 OF 1
SCALE: Full Scale	DRAWING NUMBER: REV A	JULIAN DATE