GLEN CANYON NATIONAL RECREATION AREA

PROVIDE A SUSTAINABLE VISITOR ACCESS RAMP TO THE COLORADO RIVER AT HITE

HITE SMALL BOAT LAUNCH RAMP

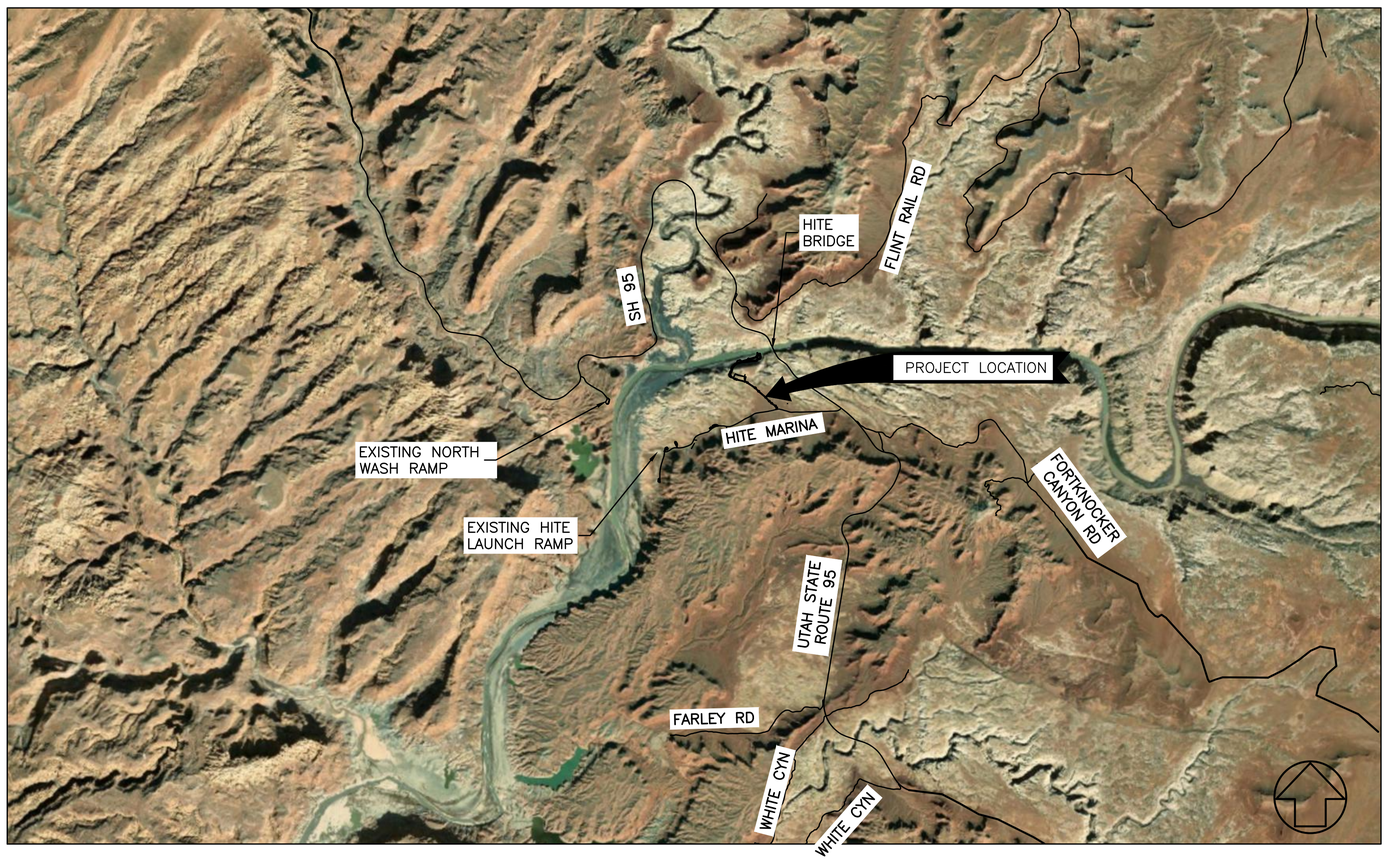

INDEX

SHEET	SUB SHEET	TITLE OF SHEET
1		COVER SHEET
2	G1	HITE LAUNCH RAMP OVERALL PROJECT SITE MAP
3	G2	HITE LAUNCH RAMP GEOMETRIC LAYOUT
4	G3	HITE LAUNCH RAMP APE BOUNDARY
5	G4	HITE LAUNCH RAMP GENERAL ABBREVIATIONS AND LEGEND
6–7	C1–C2	HITE LAUNCH RAMP ROADWAY AND RAMP TYPICAL SECTIONS
8–17	C3–C12	HITE LAUNCH RAMP PLAN AND PROFILES
18–19	C13–C14	HITE LAUNCH RAMP PARKING AREAS
20	S1	HITE LAUNCH RAMP LAUNCH RAMP PLAN
21	S2	HITE LAUNCH RAMP LAUNCH RAMP PROFILE
22	S3	HITE LAUNCH RAMP LAUNCH RAMP LAYOUT AND SECTION
23	S4	HITE LAUNCH RAMP TYPICAL RAMP DETAILS

PMIS NO.: 318878

0 5,000 10,000 15,000
SCALE: 1" = 5,000'

Mark	Sheet	REVISION	Date	Initial

QUALITY DESIGN CERTIFICATION

- ☐ Prepared in Accordance with Design Development (Title I) _____ Drawing No.
- OR
- ☐ Variance from Design Development (Title I) Approved by Superintendent on _____ Date
- OR
- ☐ Construction Drawing Not Preceded by Design Development (Title I)

Project Manager _____ Date

SCHEMATIC DESIGN

DEPARTMENT OF THE INTERIOR
NATIONAL PARK SERVICE
DENVER SERVICE CENTER

TITLE OF DRAWING
COVER SHEET
LOCATION WITHIN PARK
HITE
NAME OF PARK
GLEN CANYON NATIONAL RECREATION AREA
REGION INTERMOUNTAIN | COUNTY SAN JUAN | STATE UTAH

DRAWING NO. 608 / 194760
PMIS/PKG NO. 318878
SHEET 1 OF 23

7/5/2025 12:16:23 PM c:\pw_workdir\den003\hailey.olguin@jacobs.com\d1482925\318878_G0-COVER.dwg

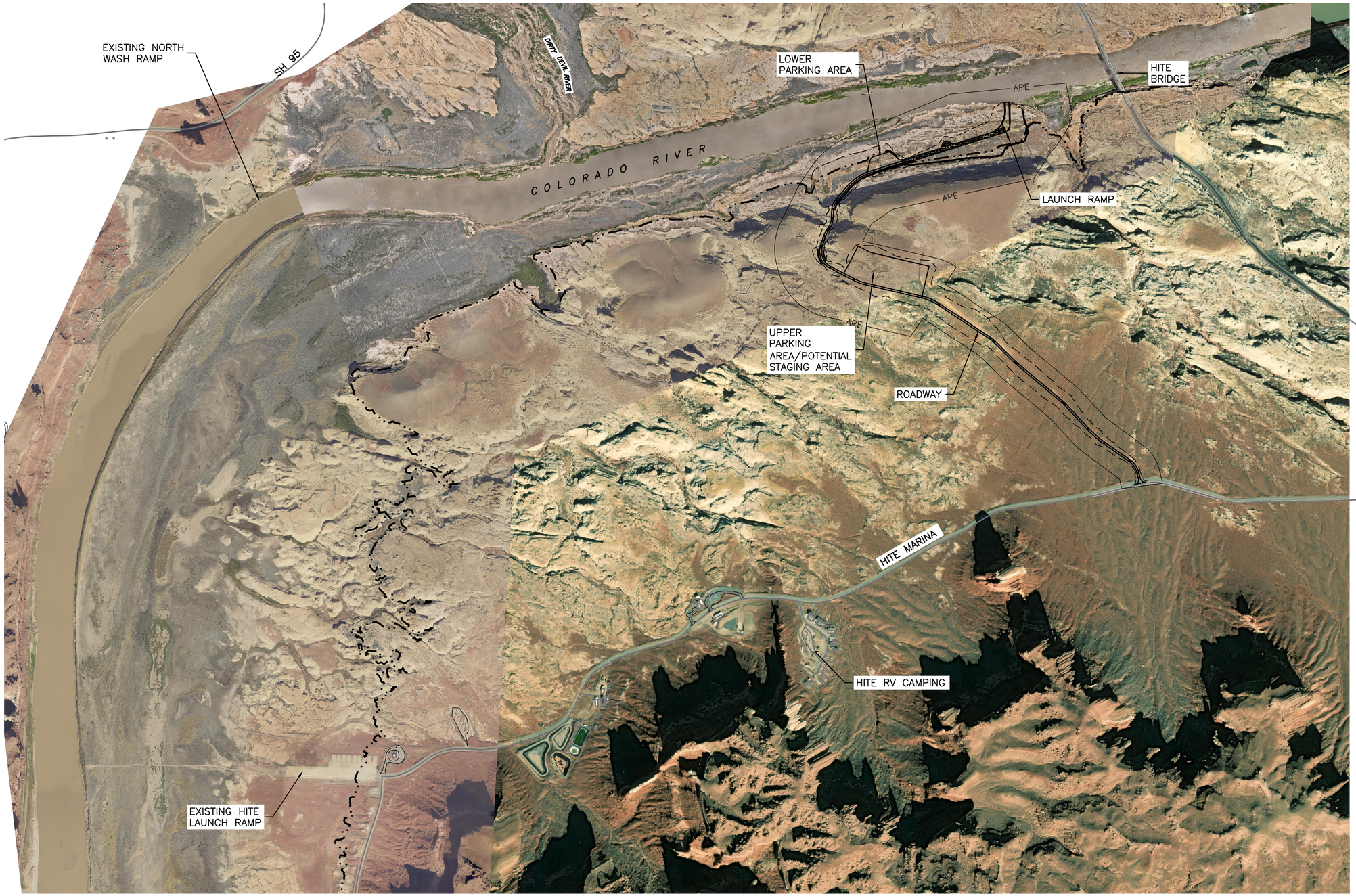

0 500 1,000 1,500

SCALE: 1" = 500'

DESIGNED: A.REID CADD: H.MORTON TECH. REVIEW: A.SWAFFORD DATE: 7/5/25	SUB SHEET NO. G1	TITLE OF DRAWING GENERAL HITE LAUNCH RAMP OVERALL PROJECT SITE MAP GLEN CANYON NATIONAL RECREATION AREA	DRAWING NO. 608 194760 PMIS/PKG NO. 318878 SHEET 2 OF 23

7/5/2025 12:17:27 PM c:\pw_workdir\den003\hailey.olguin@jacobs.com\d1482925\318878_G1-STMAP.dwg

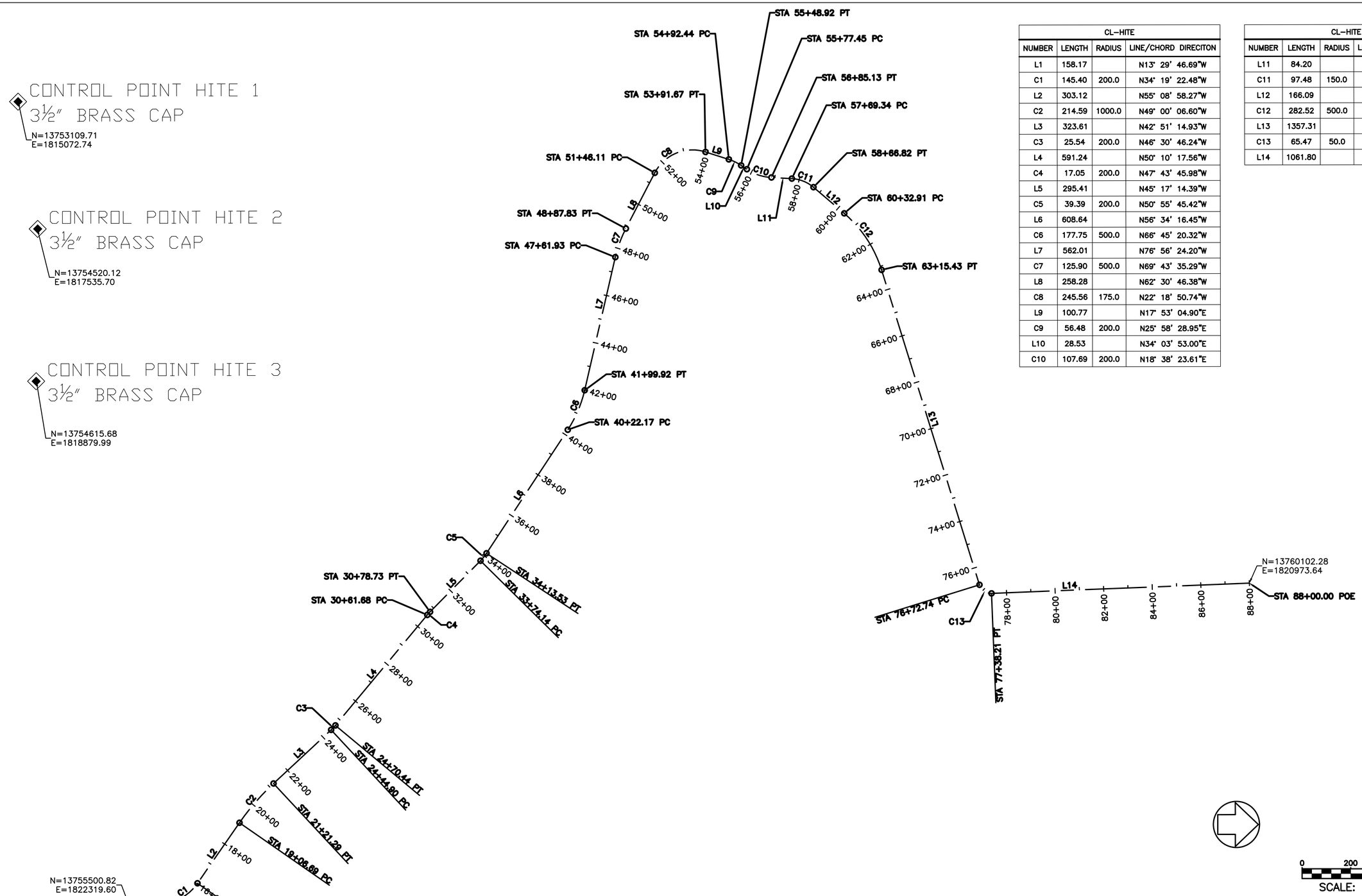

CL–HITE			
NUMBER	LENGTH	RADIUS	LINE/CHORD DIRECITON
L1	158.17		N13° 29' 46.69"W
C1	145.40	200.0	N34° 19' 22.48"W
L2	303.12		N55° 08' 58.27"W
C2	214.59	1000.0	N49° 00' 06.60"W
L3	323.61		N42° 51' 14.93"W
C3	25.54	200.0	N46° 30' 46.24"W
L4	591.24		N50° 10' 17.56"W
C4	17.05	200.0	N47° 43' 45.98"W
L5	295.41		N45° 17' 14.39"W
C5	39.39	200.0	N50° 55' 45.42"W
L6	608.64		N56° 34' 16.45"W
C6	177.75	500.0	N66° 45' 20.32"W
L7	562.01		N76° 56' 24.20"W
C7	125.90	500.0	N69° 43' 35.29"W
L8	258.28		N62° 30' 46.38"W
C8	245.56	175.0	N22° 18' 50.74"W
L9	100.77		N17° 53' 04.90"E
C9	56.48	200.0	N25° 58' 28.95"E
L10	28.53		N34° 03' 53.00"E
C10	107.69	200.0	N18° 38' 23.61"E

CL–HITE			
NUMBER	LENGTH	RADIUS	LINE/CHORD DIRECITON
L11	84.20		N03° 12' 54.22"E
C11	97.48	150.0	N21° 49' 58.40"E
L12	166.09		N40° 27' 02.59"E
C12	282.52	500.0	N56° 38' 17.01"E
L13	1357.31		N72° 49' 31.43"E
C13	65.47	50.0	N35° 18' 58.02"E
L14	1061.80		N02° 11' 35.39"W

DESIGNED: A.REID CADD: H.MORTON TECH. REVIEW: A.SWAFFORD DATE: 7/6/25	SUB SHEET NO. G2	TITLE OF DRAWING GENERAL HITE LAUNCH RAMP GEOMETRIC LAYOUT GLEN CANYON NATIONAL RECREATION AREA	DRAWING NO. 608 / 194760 PMIS/PKG NO. 318878 SHEET 3 OF 23

7/6/2025 5:43:22 PM C:\pw_workdir\den003\hailey.olguin@jacobs.com\d1482925\318878_G2-GEOMAP.dwg

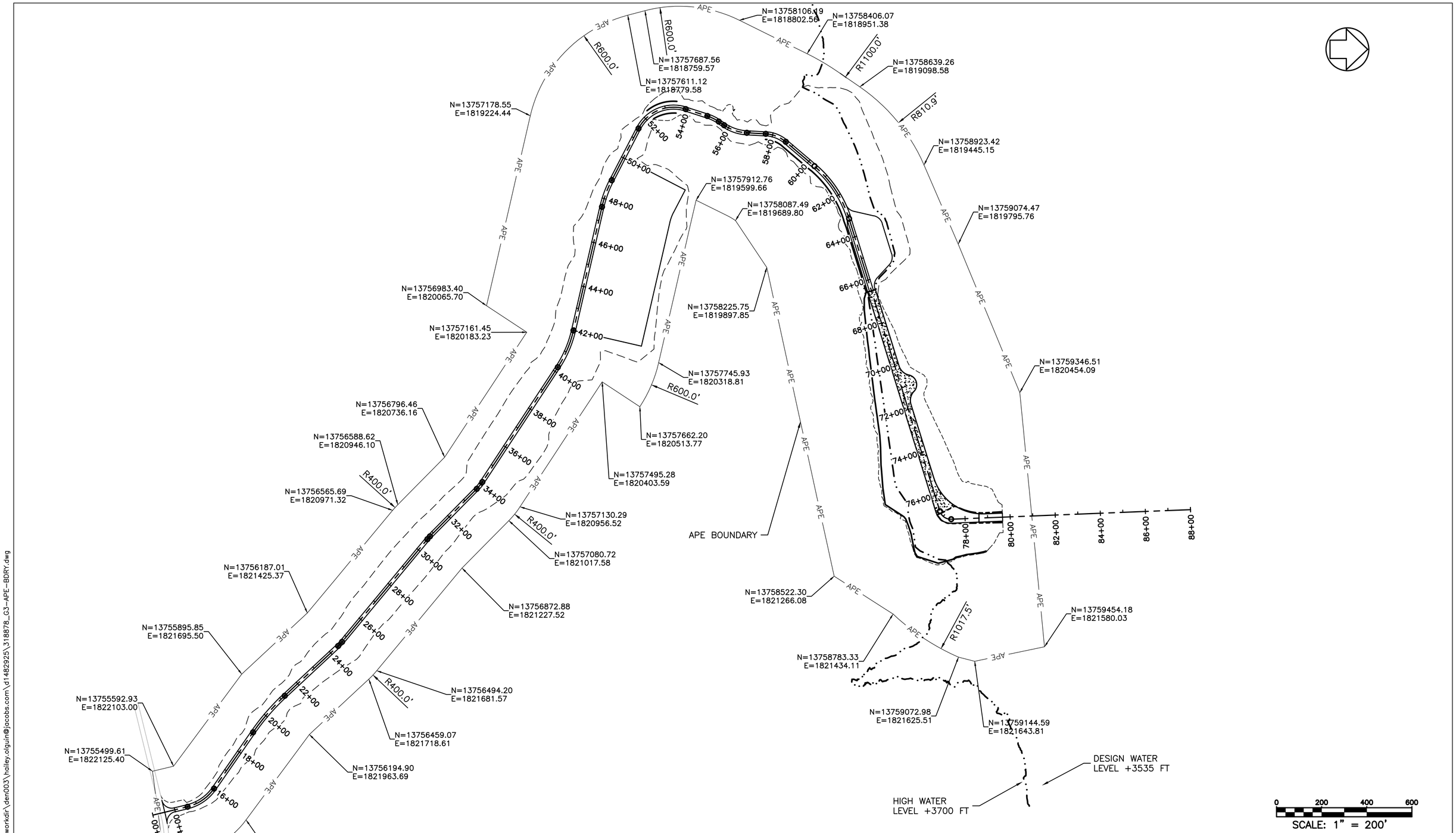

DESIGNED: A.REID	SUB SHEET NO.	TITLE OF DRAWING	DRAWING NO.
CADD: H.MORTON	G3	GENERAL HITE LAUNCH RAMP APE BOUNDARY	608 / 194760
TECH. REVIEW: A.SWAFFORD			PMIS/PKG NO. 318878
DATE: 7/6/25		GLEN CANYON NATIONAL RECREATION AREA	SHEET 4 OF 23

7/6/2025 5:44:33 PM C:\pw_workdir\den003\hailey.olguin@jacobs.com\d1482925\318878_G3-APE-BDRY.dwg

ABBREVIATIONS

ABDN	ABANDON
ADD.	ADDITIONAL
APE	AREA OF POTENTIAL EFFECT
APPROX	APPROXIMATELY
ASTM	AMERICAN SOCIETY FOR TESTING AND MATERIALS
BL	BASELINE
BM	BENCH MARK
BMP	BEST MANAGEMENT PRACTICES
BP	BEGINNING POINT
BOT	BOTTOM
BOP	BOTTOM OF PIPE
BVC	BEGINNING OF VERTICAL CURVE
CIP	CAST–IN–PLACE
CGP	CONSTRUCTION GENERAL PERMIT
CJ	CONTRACTION JOINT
CL	CENTER LINE
CLR	CLEAR
CMP	CORRUGATED METAL PIPE
COMM	COMMUNICATION
CONC	CONCRETE
CONST	CONSTRUCTION
CONSTR	CONSTRUCT
CON	CONTRACTOR
CP	CENTER POINT
CR	CRACK
CTR	CENTER
CU	CUBIC
CU FT	CUBIC FOOT
CU IN	CUBIC INCH
CU YD	CUBIC YARD
DBH	DIAMETER BREAST HEIGHT
DET	DETAIL
DIA	DIAMETER
DWG	DRAWING
DWG'S	DRAWINGS
DHW	DESIGN HIGH WATER
DLW	DESIGN LOW WATER
DWL	DESIGN WATER LEVEL
EA	EACH
EF	EACH FACE
EJ	EXPANSION JOINT
EL	ELEVATION
ELEC	ELECTRIC, ELECTICAL
EMBED	EMBEDMENT
EP	END POINT
EPA	ENVIRONMENTAL PROTECTION AGENCY
ENGR	ENGINEER
EOP	EDGE OF PAVEMENT
EQ	EQUAL
ETR	EXISTING TO REMAIN
EW	EACH WAY
EXIST	EXISTING
FF	FINISHED FLOOR
FT	FEET
GALV	GALVANIZED
GB	GRADE BRAKE
GR	GRAPHIC
GSE	GROUND SURFACE ELEVATION
HP	HIGH POINT
HH	HANDHOLE
ID	IDENTIFICATION
IGLD	INTERNATIONAL GREAT LAKES DATUM
IN	INCHES
INV	INVERT
LF	LINEAR FEET
LG	LONG
LOD	LIMITS OF DISTURBANCE
LP	LOW POINT
LWF	LIGHT WEIGHT FILL
MANF	MANUFACTURER
MAX	MAXIMUM
MH	MANHOLE
MIN	MINIMUM
NE	NOT ENCOUNTERED
NF	NEAR FACE
NIC	NOT IN CONTRACT
NTS	NOT TO SCALE
NUM	NUMBER
OC	ON CENTER
PC	POINT OF CURVATURE
PCC	POINT OF COMPOUND CURVATURE
PCF	POUNDS PER CUBIC FOOT
PKG	PACKAGE
PLYWD	PLYWOOD
PMS	PAD–MOUNTED SWITCH
PMT	PAD–MOUNTED TRANSFORMER
PROP	PROPOSED
PSF	POUNDS PER SQUARE FOOT
PSI	POUNDS PER SQUARE INCH
PT	POINT OF TANGENT
RC	REINFORCED CONCRETE
REF	REFERENCE
REQ'D	REQUIRED
SAN SWR	SANITARY SEWER
SEC	SECONDS
SF	SQUARE FEET
SHT	SHEET
SIM	SIMILAR
SPEC	SPECIFICATION
S.R.	STATE ROUTE
S.S.T.	STAINLESS STEEL
STA	STATION
STP	STANDARD PENETRATION TEST
SWP3	SITE STORM WATER POLLUTION PREVENTION PLAN
T&B	TOP AND BOTTOM
TEMP	TEMPORARY
TG	TOP OF GRATE (CATCH BASIN)
THK	THICK
T.O._	TOP OF __
TOC	TOP OF CONCRETE
TOW	TOP OF WALL
TS&V	TAPPING SLEEVE AND VALVE
TSW	TOP OF SIDEWALK
(TYP.)	TYPICAL
UON	UNLESS OTHERWISE NOTED
USACE	UNITED STATES ARMY CORPS OF ENGINEERS
VIF	VERIFY IN FIELD
W/	WITH
WD	WOOD
W_L MIN	WATER LEVEL MINIMUM
W_L MAX	WATER LEVEL MAXIMUM
WP	WORKING POINT
WWF	WELDED WIRE FABRIC
WZ#	WORK ZONE #
YD	YARD

SECTION / DETAIL DESIGNATIONS

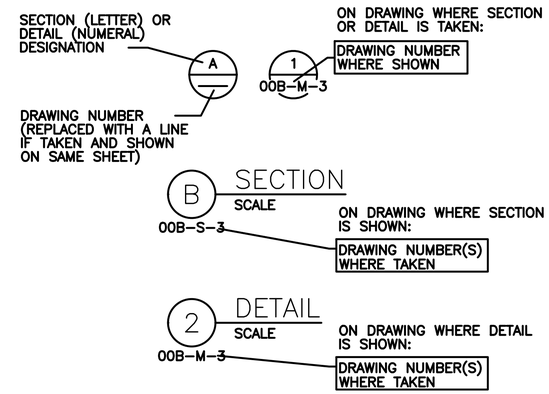

DRAWING TITLE
SCALE

ON DRAWING WHERE ONLY A TITLE IS REQUIRED WITH NO REFERENCE (eg: ELEVATIONS)

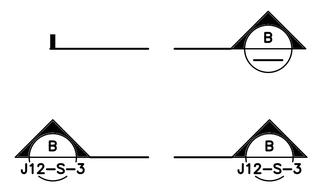

SECTION CALLOUT WHERE SECTION IS ON THE SAME SHEET AND CUT EXTENDS TO A FIXED LIMIT

SECTION CALLOUT WHERE SECTION IS ON ANOTHER SHEET AND CUT EXTENDS THROUGHOUT ENTIRE SHEET

1 — GRID LINE INDICATOR

1 — KEYNOTE NUMBER

1 — REVISION / ADDENDA NUMBER

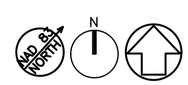

MAGNETIC NORTH / TRUE NORTH ARROWS

DESIGN DETAIL DESIGNATION

DESIGN DETAIL DESIGNATION (NUMERAL) SHOWN ON DESIGN DETAIL DRAWING(S) — 13402

NOTES:

1. ALL DESIGN DETAILS ARE TYPICAL AND MUST BE USED IF DESIGN DETAIL DESIGNATION IS NOT SHOWN.
2. THE TERMS STANDARD DETAILS, TYPICAL DETAILS OR A FORMS OF IT, IS SYNONYMOUS WITH DESIGN DETAIL. THE DESIGN DETAILS REPRESENT THE CHARACTER AND NATURE OF THE WORK REQUIRED THROUGHOUT THE PROJECT. ALL ASSOCIATED WORK SHALL BE IN ACCORDANCE WITH THE DESIGN DETAILS SHOWN WHETHER THE DETAILS ARE SPECIFICALLY REFERENCED OR NOT.

LEGEND

- DESIGN WATER LEVEL +3535 FT
- HIGH WATER LEVEL +3700 FT
- APE — APE BOUNDARY
- NP — NATIONAL PARKS BOUNDARY
- CUT\FILL LINE
- FLOW DIRECTION
- BERM
- DITCH FLOWLINE
- 3580 — EXISTING ELEVATION
- 3550 — ELEVATION
- CONCRETE
- RIPRAP
- SURVEY CONTROL POINT

GENERAL NOTE:

1. THIS IS A STANDARD LEGEND SHEET. THEREFORE, NOT ALL OF THE INFORMATION SHOWN MAY BE USED ON THIS PROJECT.
2. SLOPES ARE EXPRESSED AS HORIZONTAL; VERTICAL (RUN:RISE)

DESIGNED: A.REID CADD: H.MORTON TECH. REVIEW: A.SWAFFORD DATE: 7/5/25	SUB SHEET NO. G4	TITLE OF DRAWING GENERAL HITE LAUNCH RAMP GENERAL ABBREVIAITONS AND LEGEND GLEN CANYON NATIONAL RECREATION AREA	DRAWING NO. 608 / 194760 PMIS/PKG NO. 318878 SHEET 5 OF 23

7/5/2025 12:21:11 PM c:\pw_workdir\den003\hailey.olguin@jacobs.com\d1482925\318878_G4-ABBV.dwg

PROJECT LENGTHS		
	STATION	LENGTH FT
ACCESS ROAD	13+54.34 TO 66+50.00	5,295.66 OR 1.0 MILE
CONCRETE RAMP	66+50.00 TO 76+82.96	1,032.96
NATURAL GROUND RAMP	76+82.96 TO 79+66.21	283.25

*STA 57+75 TO STA 62+55: WIDTH OF 6:1 SLOPE VARIES 10'–105' WITH 3:1 DAYLIGHT SLOPE.

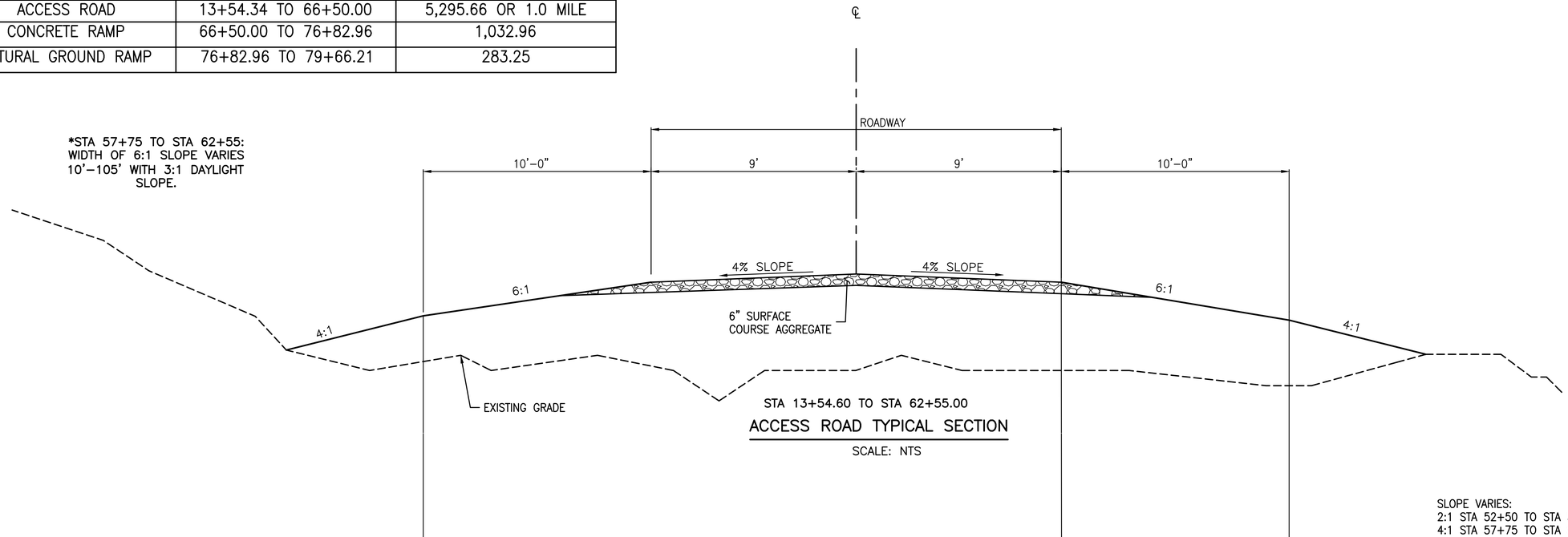

STA 13+54.60 TO STA 62+55.00

ACCESS ROAD TYPICAL SECTION

SCALE: NTS

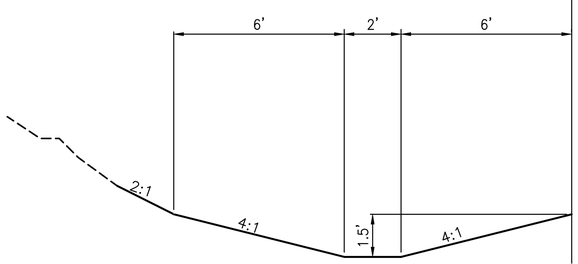

STA 52+50.00 TO STA 53+50.00
RIGHT AND LEFT
STA 57+60.00 TO STA 60+00.00 RIGHT

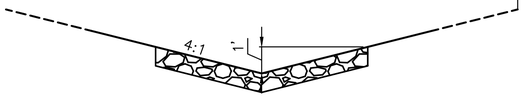

STA 53+50.00 TO STA 57+40.00 LEFT
STA 53+50.00 TO STA 57+60.00 RIGHT

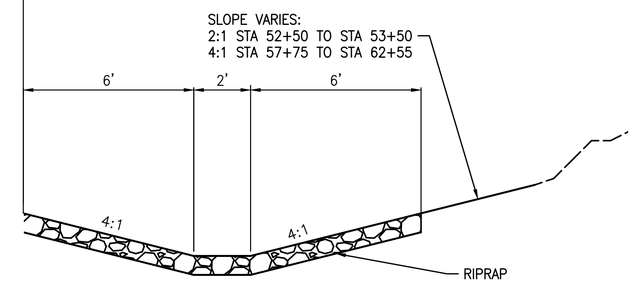

STA 60+00 TO STA 62+55

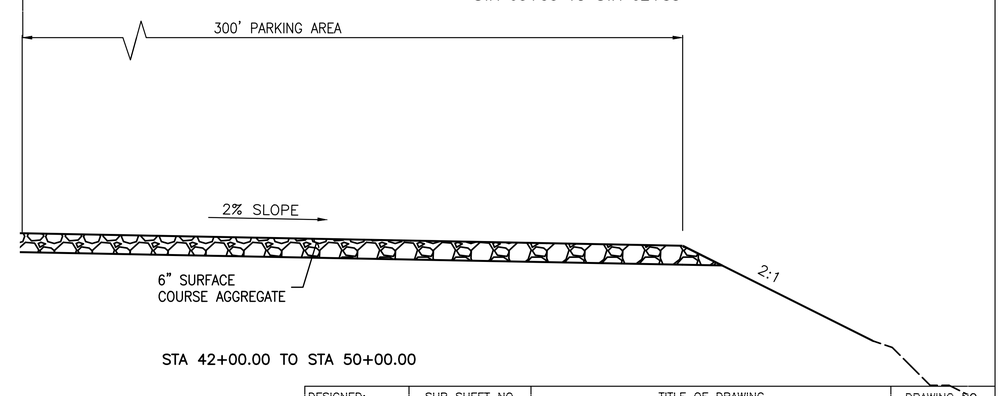

STA 42+00.00 TO STA 50+00.00

DESIGNED: A. REID	SUB SHEET NO.	TITLE OF DRAWING	DRAWING NO.
CADD: H.MORTON	C1	CIVIL	608 / 194760
TECH. REVIEW: B. MADSEN		HITE LAUNCH RAMP ROADWAY TYPICAL SECTIONS	PMIS/PKG NO. 318878
DATE: 7/6/25		GLEN CANYON NATIONAL RECREATION AREA	SHEET 6 OF 23

7/6/2025 2:58:12 PM C:\pw_workdir\den003\hailey.olguin@jacobs.com\d1482923\318878-C1_Typ.dwg

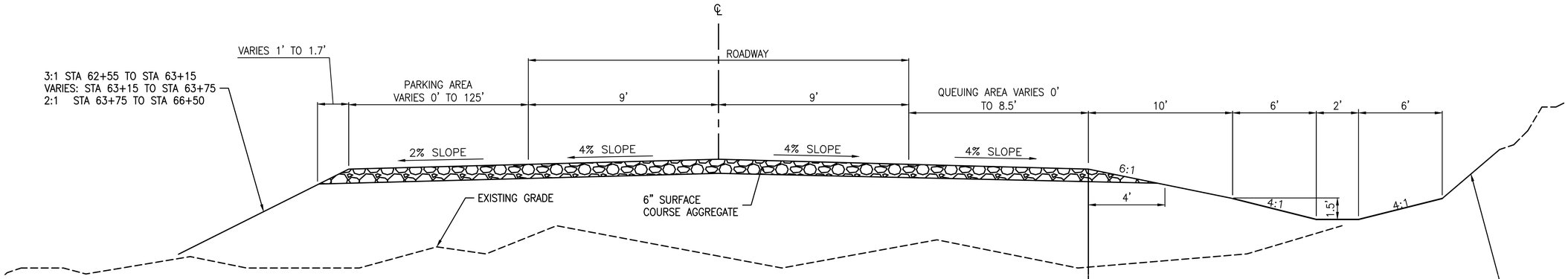

STA 62+55.00 TO STA 66+50.00

ACCESS ROAD TYPICAL SECTION

SCALE: NTS

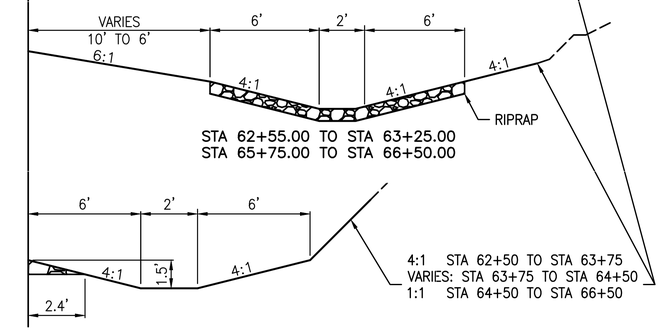

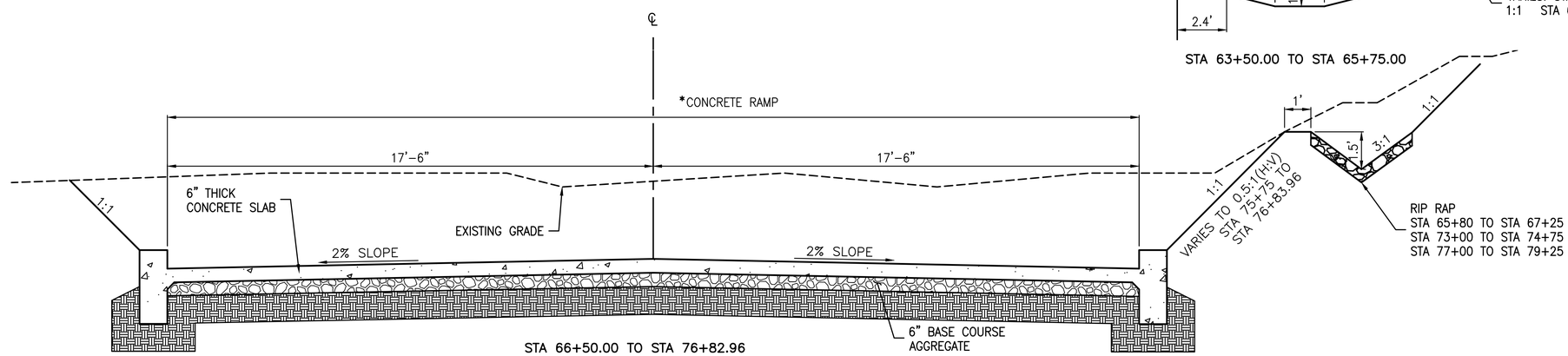

STA 66+50.00 TO STA 76+82.96

RAMP TYPICAL SECTION

SCALE: NTS

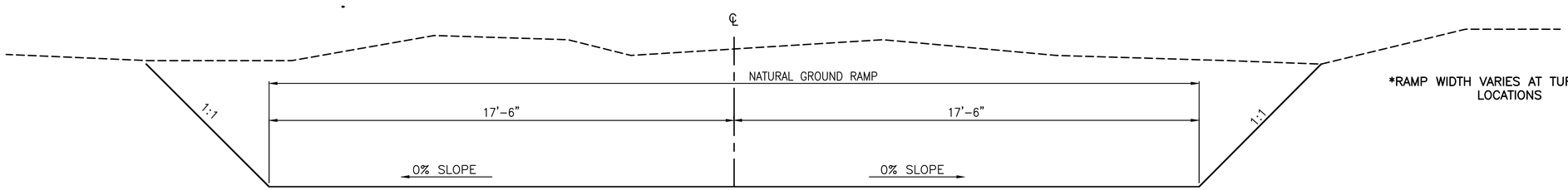

*RAMP WIDTH VARIES AT TURNAROUND LOCATIONS

STA 76+82.96 TO STA 79+66.21

NATURAL GROUND RAMP TYPICAL SECTION

SCALE: NTS

DESIGNED: A. REID CADD: A. REID TECH. REVIEW: B. MADSEN DATE: 7/6/25	SUB SHEET NO. C2	TITLE OF DRAWING CIVIL HITE LAUNCH RAMP ROADWAY AND RAMP TYPICAL SECTIONS GLEN CANYON NATIONAL RECREATION AREA	DRAWING NO. 608 / 194760 PMIS/PKG NO. 318878 SHEET 7 OF 23

7/6/2025 2:58:14 PM C:\pw_workdir\den003\hailey.olguin@jacobs.com\d1482923\318878-C1_Typ.dwg

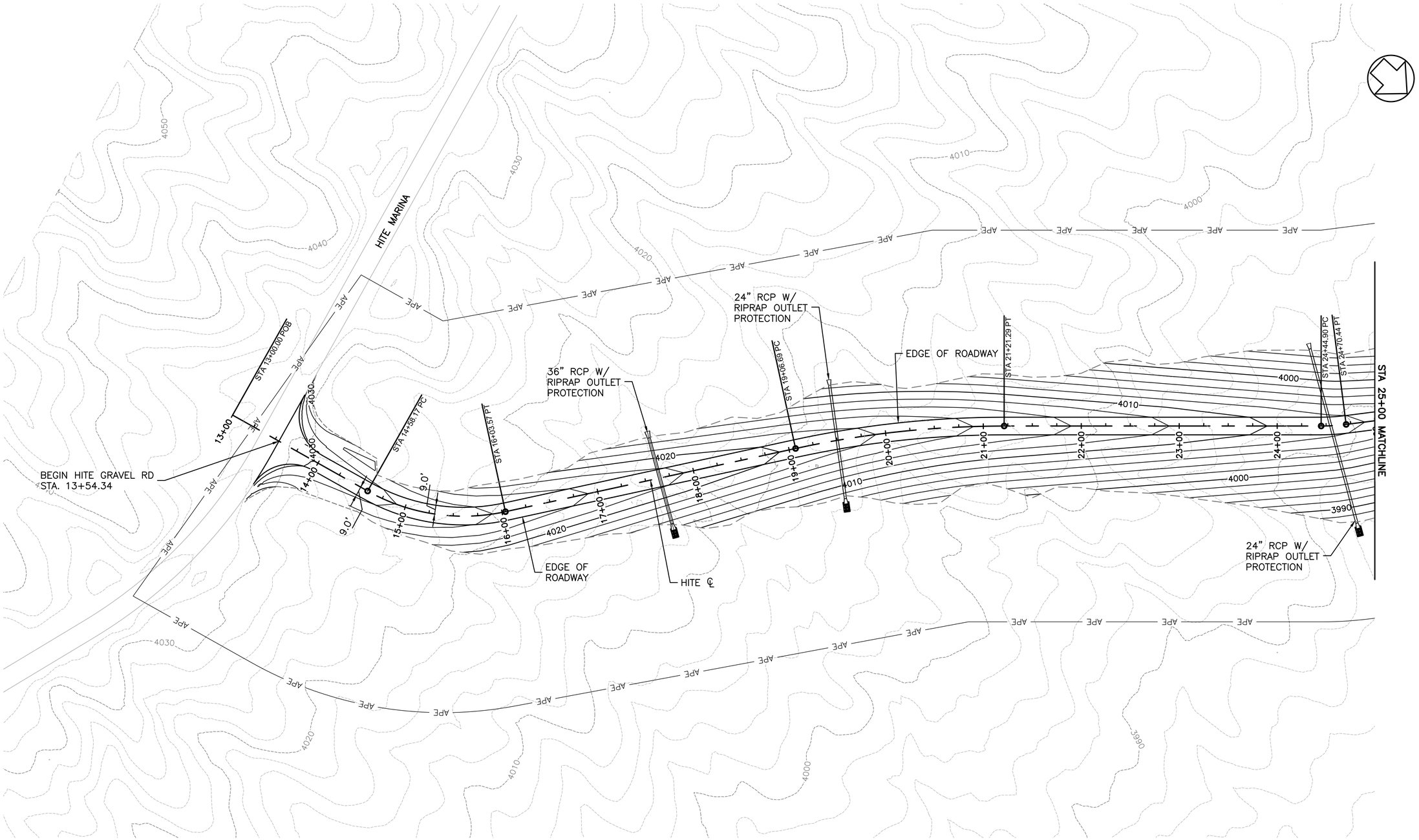

DESIGNED: A.REID	SUB SHEET NO.	TITLE OF DRAWING	DRAWING NO.
CADD: H.MORTON	C3	CIVIL	608 / 194760
TECH. REVIEW: A.SWAFFORD		HITE LAUNCH RAMP PLAN	PMIS/PKG NO. 318878
DATE: 7/6/25		13+45.19 TO 25+00	SHEET 8 OF 23
		GLEN CANYON NATIONAL RECREATION AREA	

7/6/2025 3:55:45 PM c:\pw_workdir\den003\hailey.olguin@jacobs.com\d1482923\318878-C5_Pln.dwg

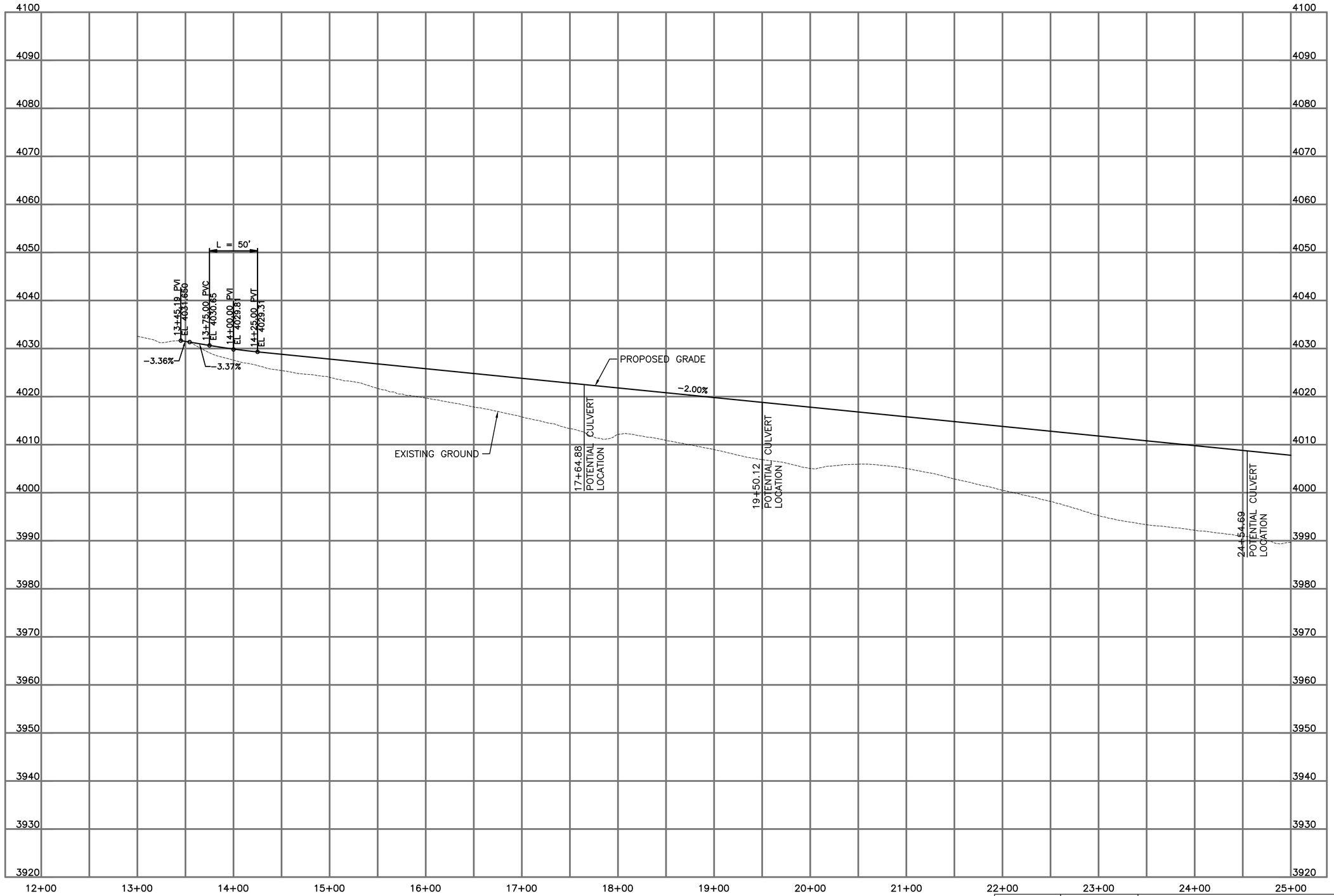

DESIGNED: A.REID CADD: H.MORTON TECH. REVIEW: A.SWAFFORD DATE: 7/5/25	SUB SHEET NO. C4	TITLE OF DRAWING CIVIL HITE LAUNCH RAMP PROFILE 13+45.19 TO 25+00 GLEN CANYON NATIONAL RECREATION AREA	DRAWING NO. 608 / 194760 PMIS/PKG NO. 318878 SHEET 9 OF 23

7/5/2025 12:39:50 PM c:\pw_workdir\den003\hailey.olguin@jacobs.com\d1482923\318878-C5_Pln.dwg

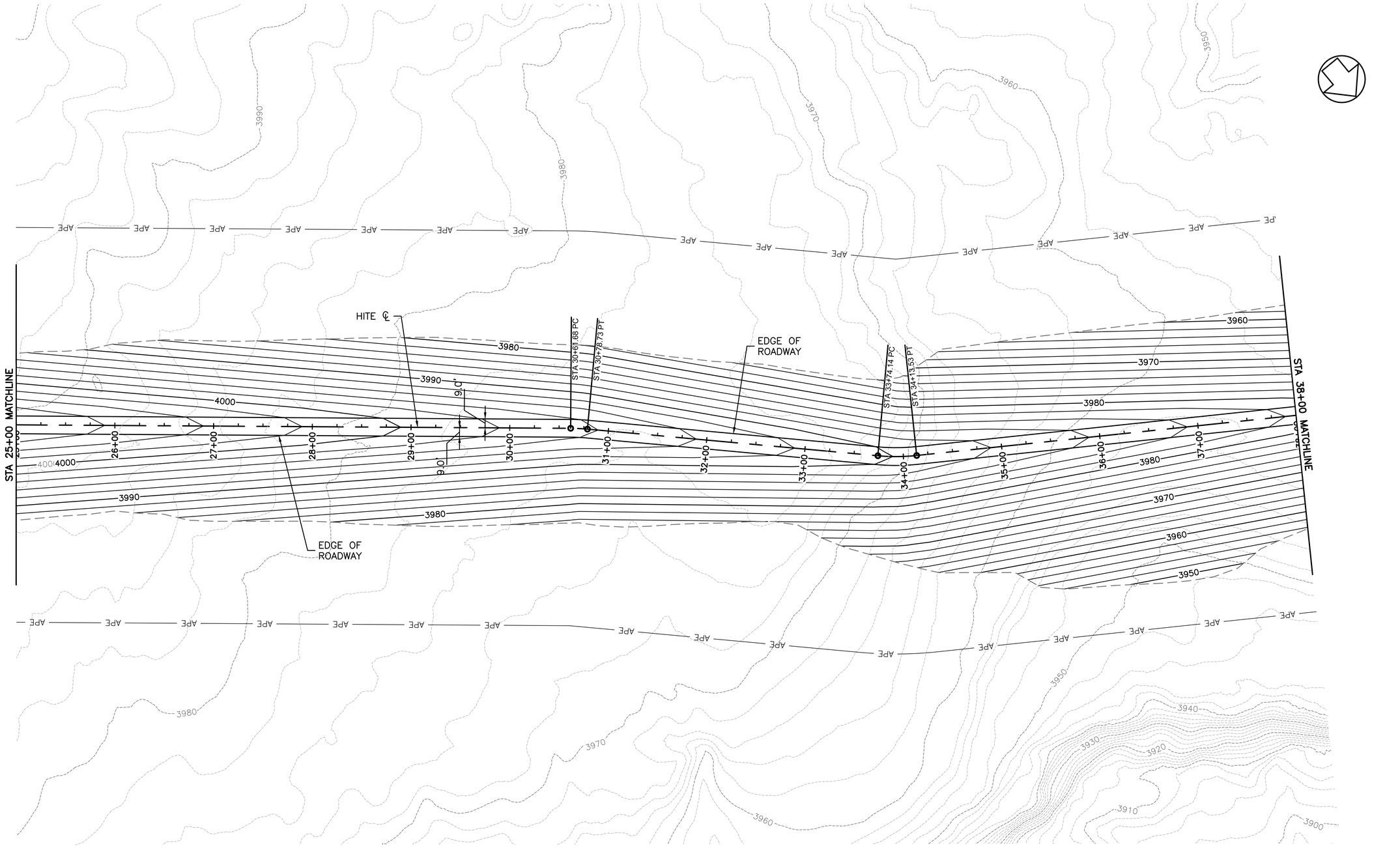

0 50 100 150

SCALE: 1" = 50'

DESIGNED: A.REID CADD: H.MORTON TECH. REVIEW: A.SWAFFORD DATE: 7/6/25	SUB SHEET NO. C5	TITLE OF DRAWING CIVIL HITE LAUNCH RAMP PLAN 25+00 TO 38+00 GLEN CANYON NATIONAL RECREATION AREA	DRAWING NO. 608 / 194760 PMIS/PKG NO. 318878 SHEET 10 OF 23

7/6/2025 3:55:48 PM c:\pw_workdir\den003\hailey.olguin@jacobs.com\d1482923\318878-C5_Pln.dwg

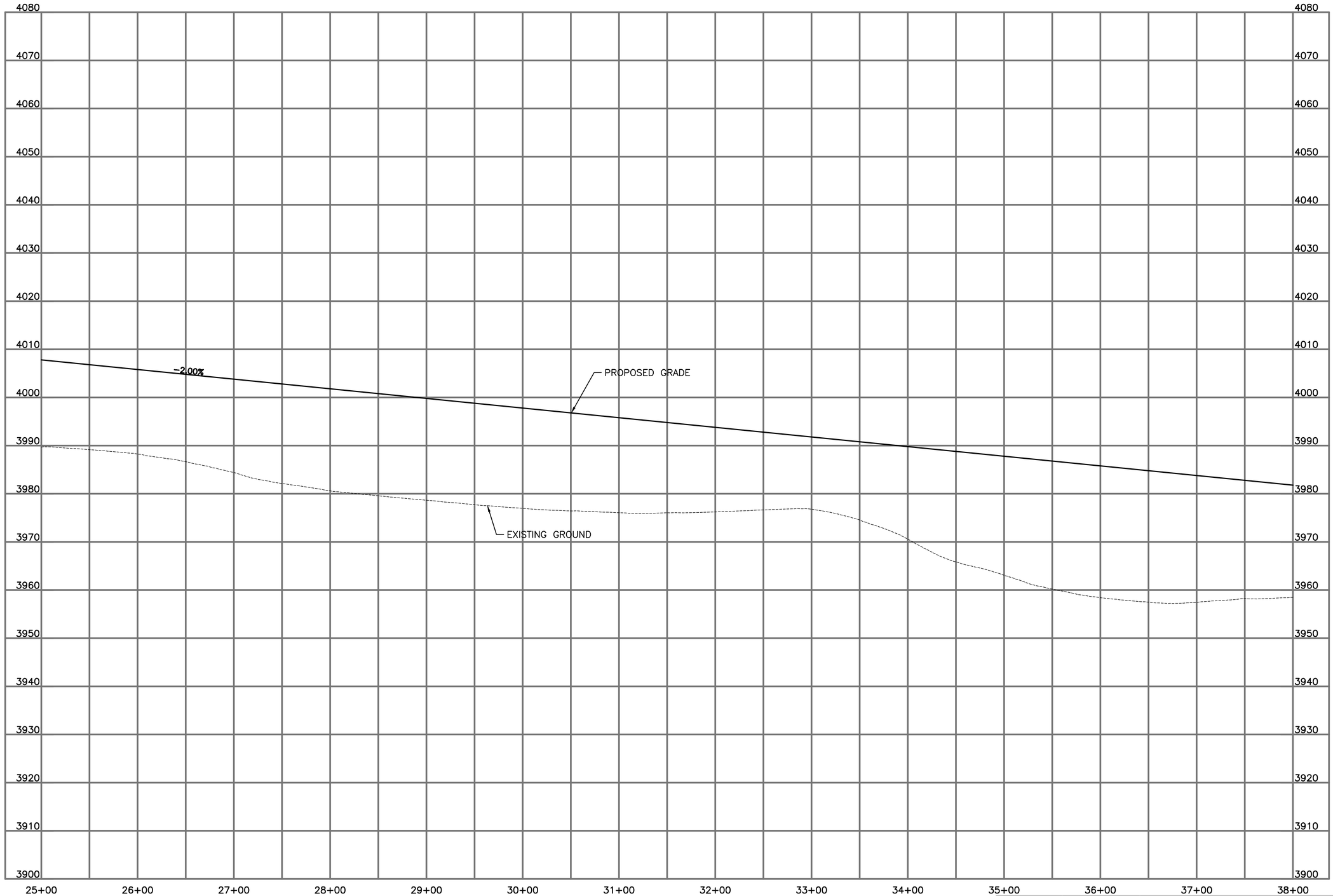

DESIGNED: A.REID CADD: H.MORTON TECH. REVIEW: A.SWAFFORD DATE: 7/5/25	SUB SHEET NO. C6	TITLE OF DRAWING CIVIL HITE LAUNCH RAMP PROFILE 25+00 TO 38+00 GLEN CANYON NATIONAL RECREATION AREA	DRAWING NO. 608 / 194760 PMIS/PKG NO. 318878 SHEET 11 OF 23

7/5/2025 12:39:53 PM c:\pw_workdir\den003\hailey.alguin@jacobs.com\d1482923\318878-C5_Pln.dwg

NOTES

1. SEE SHEET C13 FOR ADDITIONAL UPPER PARKING AREA DETAILS

0 50 100 150
SCALE: 1" = 50'

DESIGNED: A.REID CADD: H.MORTON TECH. REVIEW: A.SWAFFORD DATE: 7/6/25	SUB SHEET NO. C7	TITLE OF DRAWING CIVIL HITE LAUNCH RAMP PLAN 38+00 TO 51+50 GLEN CANYON NATIONAL RECREATION AREA	DRAWING NO. 608 / 194760 PMIS/PKG NO. 318878 SHEET 12 OF 23

7/6/2025 3:55:50 PM c:\pw_workdir\den003\hailey.olguin@jacobs.com\d1482923\318878-C5_Pln.dwg

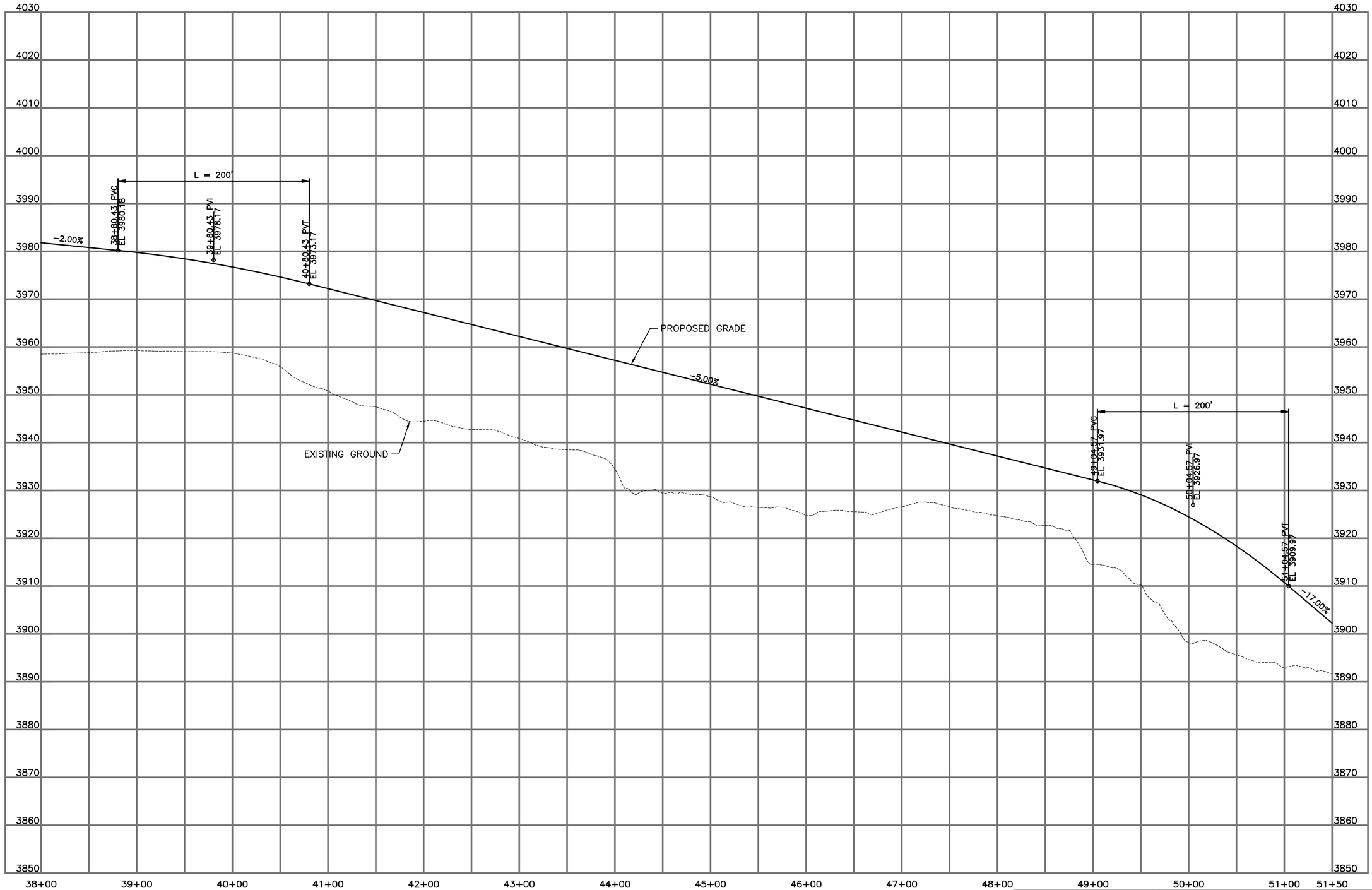

DESIGNED: A.REID CADD: H.MORTON TECH. REVIEW: A.SWAFFORD DATE: 7/5/25	SUB SHEET NO. C8	TITLE OF DRAWING CIVIL HITE LAUNCH RAMP PROFILE 38+00 TO 51+50 GLEN CANYON NATIONAL RECREATION AREA	DRAWING NO. 608 / 194760 PMIS/PKG NO. 318878 SHEET 13 OF 23

7/5/2025 12:39:56 PM c:\pw_workdir\den003\hailey.alguin@jacobs.com\d1482923\318878-C5_Pln.dwg

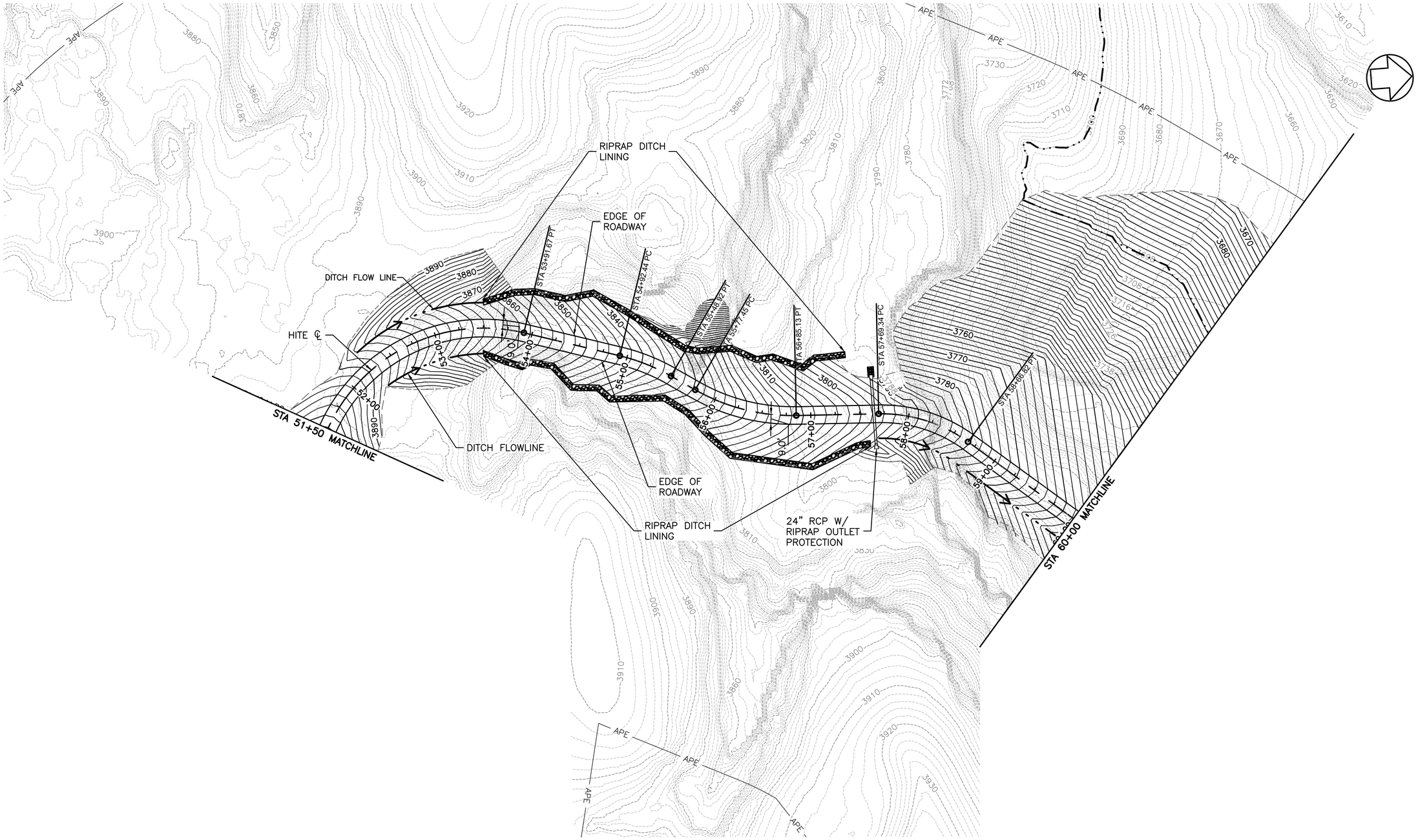

0 50 100 150

SCALE: 1" = 50'

DESIGNED: A.REID CADD: H.MORTON TECH. REVIEW: A.SWAFFORD DATE: 7/6/25	SUB SHEET NO. C9	TITLE OF DRAWING CIVIL HITE LAUNCH RAMP PLAN 51+50 TO 60+00 GLEN CANYON NATIONAL RECREATION AREA	DRAWING NO. 608 / 194760 PMIS/PKG NO. 318878 SHEET 14 OF 23

7/6/2025 3:41:29 PM C:\pw_workdir\den003\hailey.olguin@jacobs.com\d1482923\318878-C5_Pln.dwg

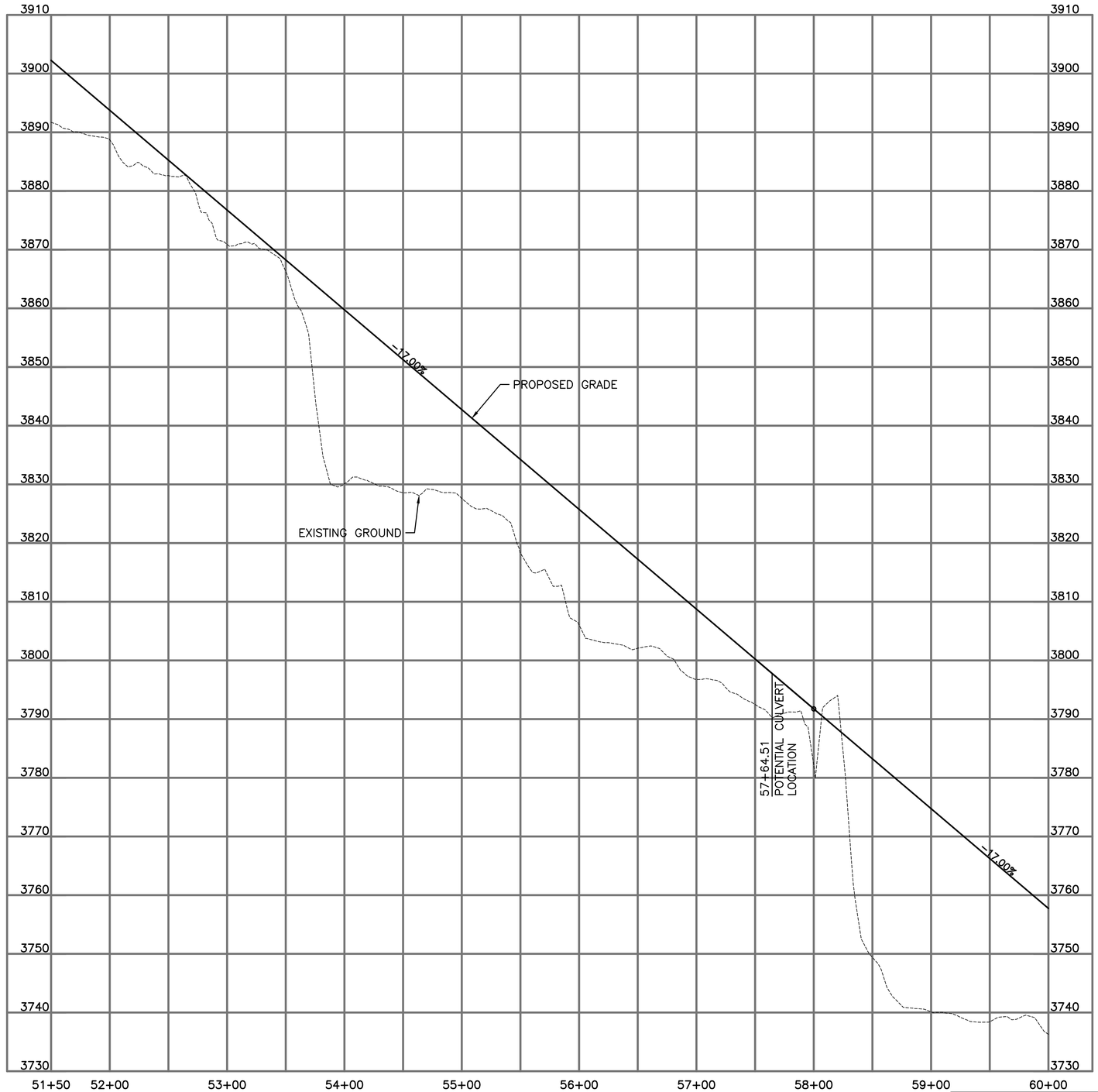

DESIGNED: A.REID CADD: H.MORTON TECH. REVIEW: A.SWAFFORD DATE: 7/5/25	SUB SHEET NO. C10	TITLE OF DRAWING CIVIL HITE LAUNCH RAMP PROFILE 51+50 TO 60+00 GLEN CANYON NATIONAL RECREATION AREA	DRAWING NO. 608 / 194760 PMIS/PKG NO. 318878 SHEET 15 OF 23

7/5/2025 12:39:59 PM c:\pw_workdir\den003\hailey.alguin@jacobs.com\d1482923\318878-C5_Pln.dwg

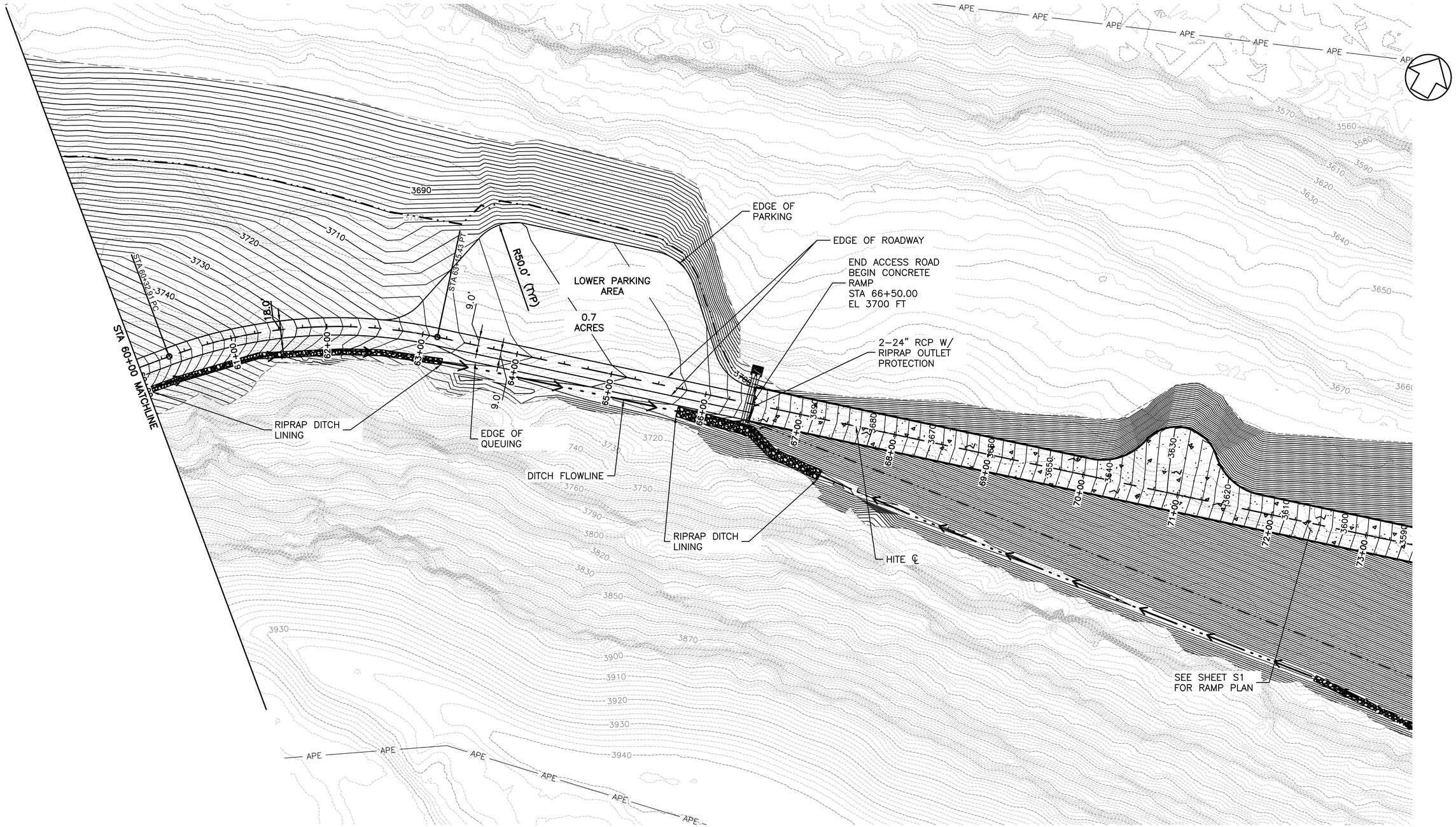

NOTES

1. SEE SHEET C14 FOR ADDITIONAL LOWER PARKING AREA DETAILS

0 50 100 150
SCALE: 1" = 50'

DESIGNED: A.REID CADD: H.MORTON TECH. REVIEW: A.SWAFFORRD DATE: 7/6/25	SUB SHEET NO. C11	TITLE OF DRAWING CIVIL HITE LAUNCH RAMP PLAN 60+00 TO 69+64.21 GLEN CANYON NATIONAL RECREATION AREA	DRAWING NO. 608 / 194760 PMIS/PKG NO. 318878 SHEET 16 OF 23

7/6/2025 5:16:44 PM C:\pw_workdir\den003\hailey.olguin@jacobs.com\d1482923\318878-C5_Pln.dwg

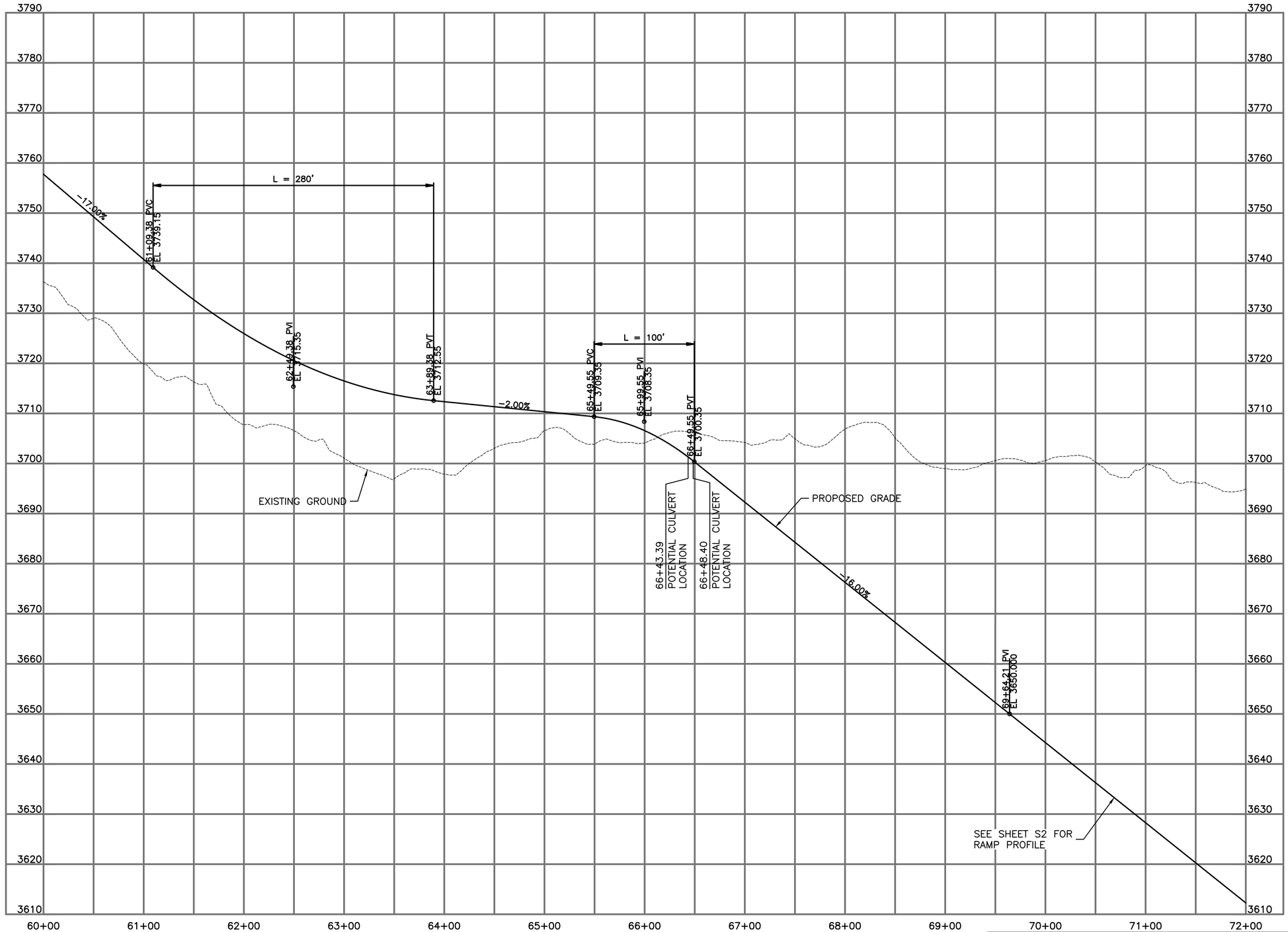

DESIGNED: A.REID CADD: H.MORTON TECH. REVIEW: A.SWAFFORD DATE: 7/5/25	SUB SHEET NO. C12	TITLE OF DRAWING CIVIL HITE LAUNCH RAMP PROFILE 60+00 TO 69+64.21 GLEN CANYON NATIONAL RECREATION AREA	DRAWING NO. 608 / 194760 PMIS/PKG NO. 318878 SHEET 17 OF 23

7/5/2025 12:40:02 PM c:\pw_workdir\den003\hailey.olguin@jacobs.com\d1482923\318878-C5_Pln.dwg

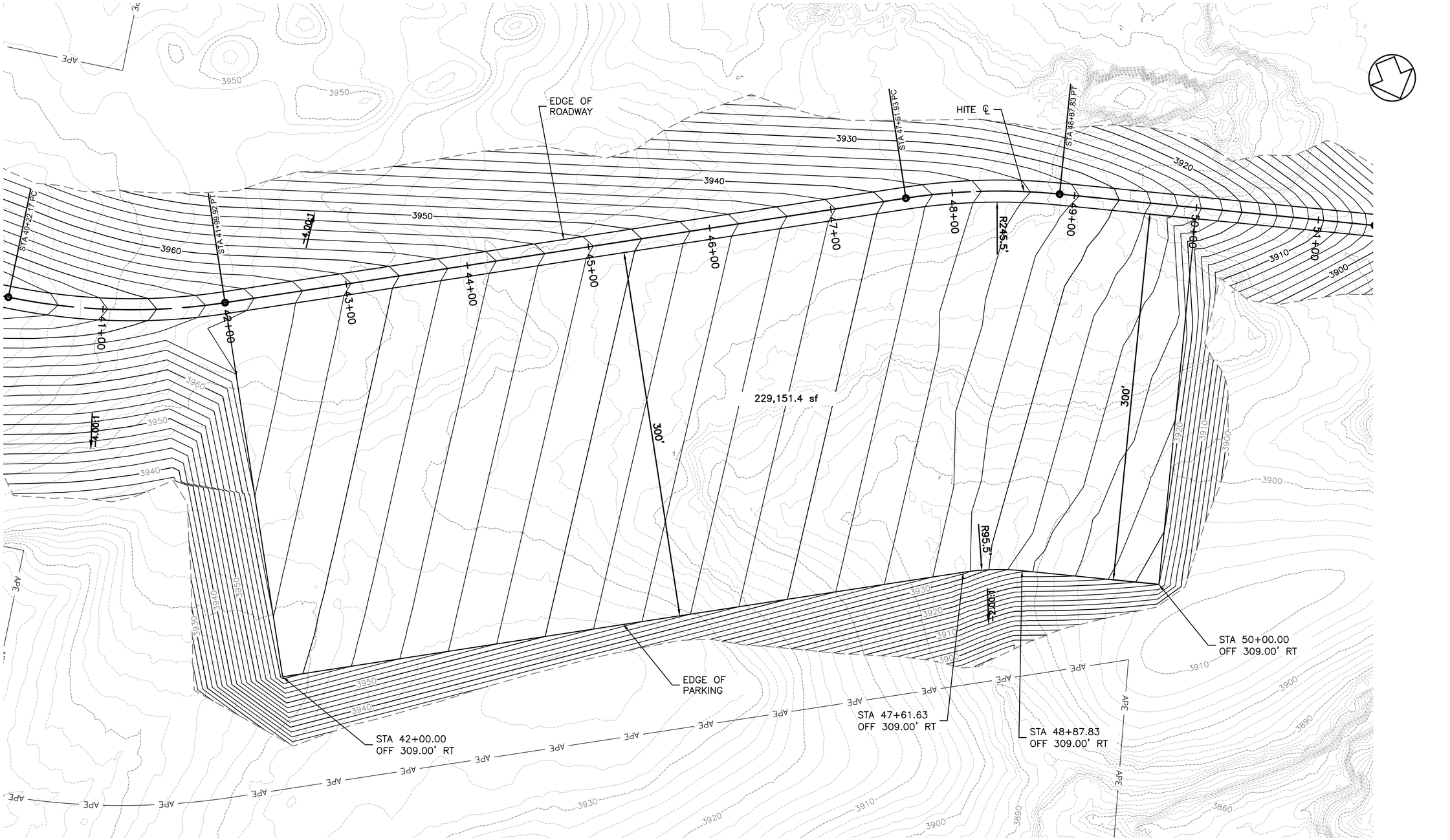

DESIGNED: A.REID	SUB SHEET NO.	TITLE OF DRAWING	DRAWING NO.
CADD: H.MORTON	C13	CIVIL	608 / 194760
TECH. REVIEW: A.SWAFFORD		HITE LAUNCH RAMP UPPER PARKING AREA	PMIS/PKG NO. 318878
DATE: 7/6/25		GLEN CANYON NATIONAL RECREATION AREA	SHEET 18 OF 23

7/6/2025 4:10:38 PM c:\pw_workdir\den003\hailey.olguin@jacobs.com\d1482923\318878-C15_Pln.dwg

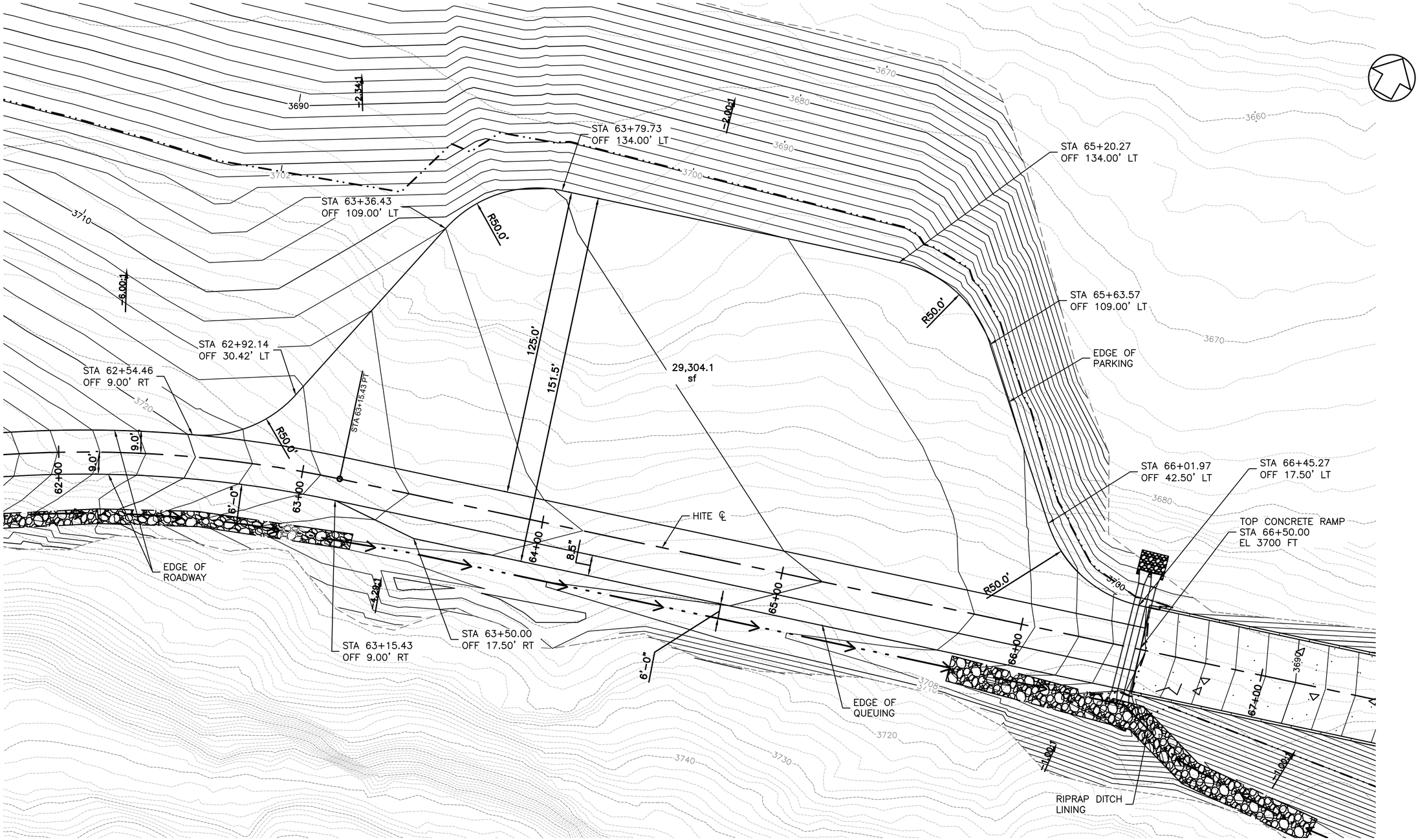

0 20 40 60

SCALE: 1" = 20'

DESIGNED: A.REID CADD: H.MORTON TECH. REVIEW: A.SWAFFORD DATE: 7/6/25	SUB SHEET NO. C14	TITLE OF DRAWING CIVIL HITE LAUNCH RAMP LOWER PARKING AREA GLEN CANYON NATIONAL RECREATION AREA	DRAWING NO. 608 194760 PMIS/PKG NO. 318878 SHEET 19 OF 23

7/6/2025 5:18:52 PM C:\pw_workdir\den003\hailey.alguin@jacobs.com\d1482923\318878-C15_Pln.dwg

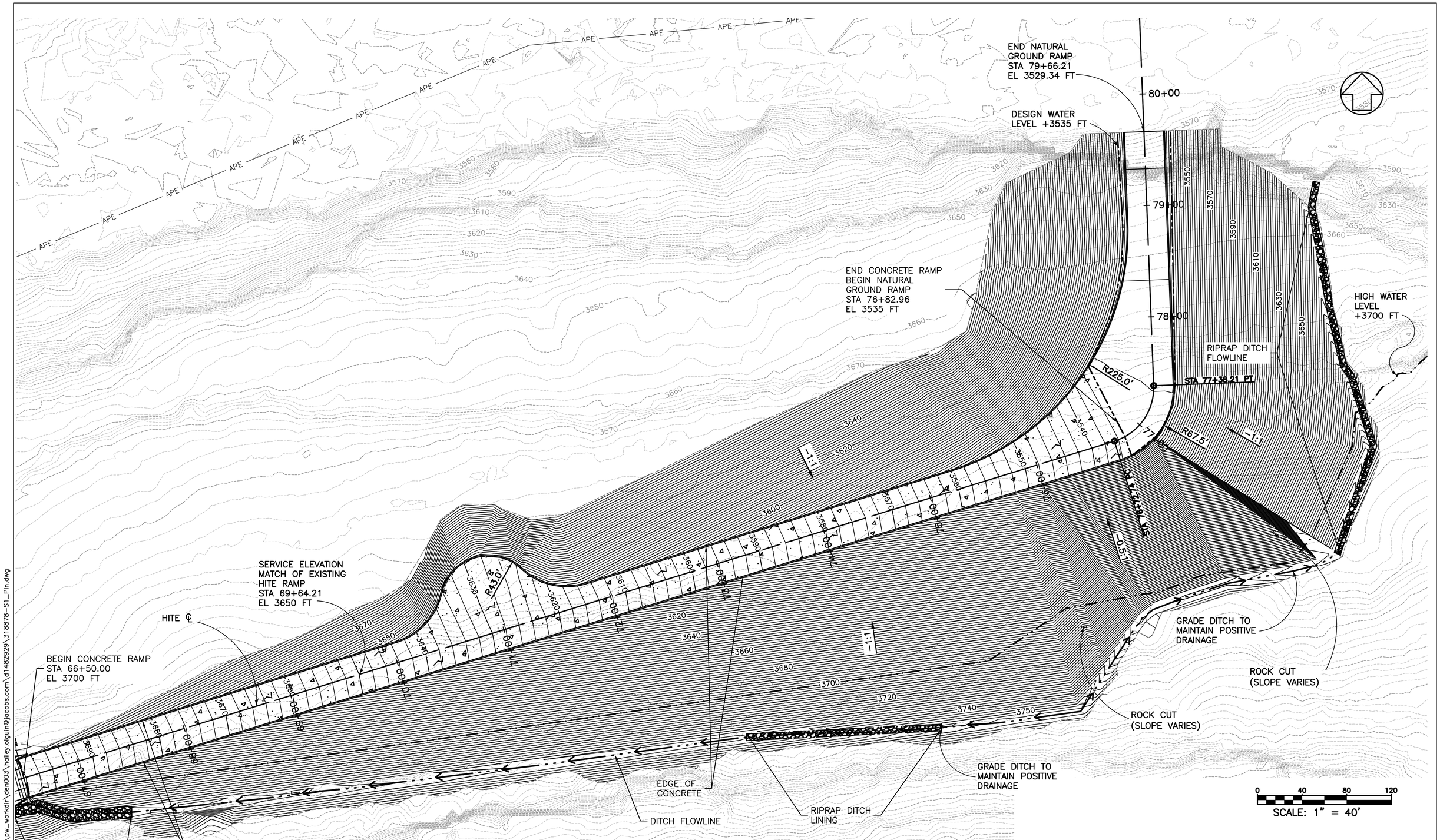

DESIGNED: A.REID	SUB SHEET NO.	TITLE OF DRAWING STRUCTURAL	DRAWING NO. 608 / 194760
CADD: H.MORTON	S1	HITE LAUNCH RAMP LAUNCH RAMP PLAN	PMIS/PKG NO. 318878
TECH. REVIEW: A.SWAFFORD			SHEET 20 OF 23
DATE: 7/6/25		GLEN CANYON NATIONAL RECREATION AREA	

7/6/2025 5:14:57 PM C:\pw_workdir\den003\bailey.olguin@jacobs.com\d1482929\318878-S1_Pln.dwg

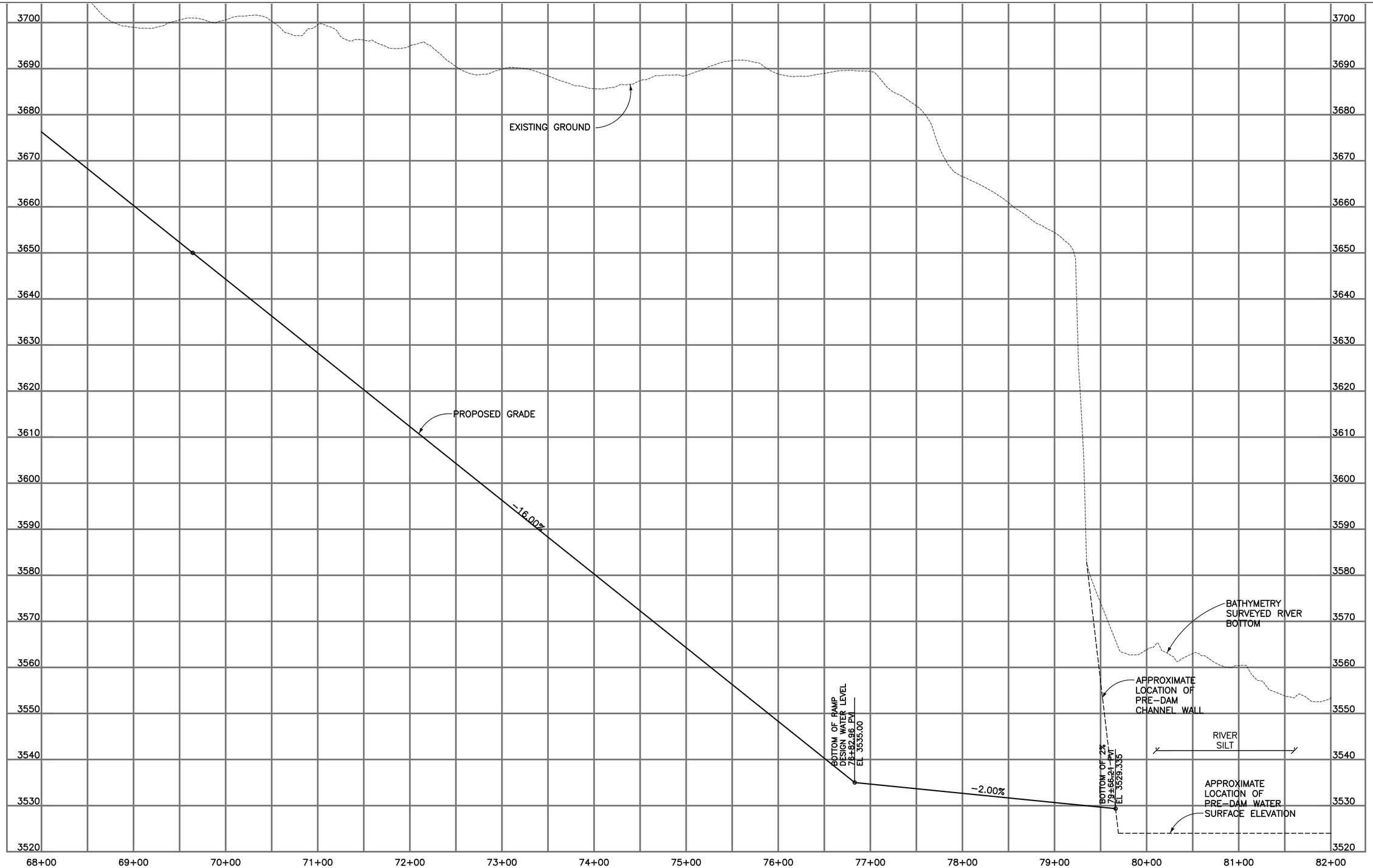

DESIGNED: A.REID CADD: H.MORTON TECH. REVIEW: A.SWAFFORD DATE: 7/5/25	SUB SHEET NO. S2	TITLE OF DRAWING STRUCTURAL HITE LAUNCH RAMP LAUNCH RAMP PROFILE GLEN CANYON NATIONAL RECREATION AREA	DRAWING NO. 608 / 194760 PMIS/PKG NO. 318878 SHEET 21 OF 23

7/5/2025 1:51:40 PM C:\pw_workdir\den003\hailey.olguin@jacobs.com\d1482929\318878-S1_Pln.dwg

1 GRADE BEAM DETAIL
NTS

2 DETAIL
SCALE: 1"=1'-0"

1 0 1 2
SCALE OF FEET

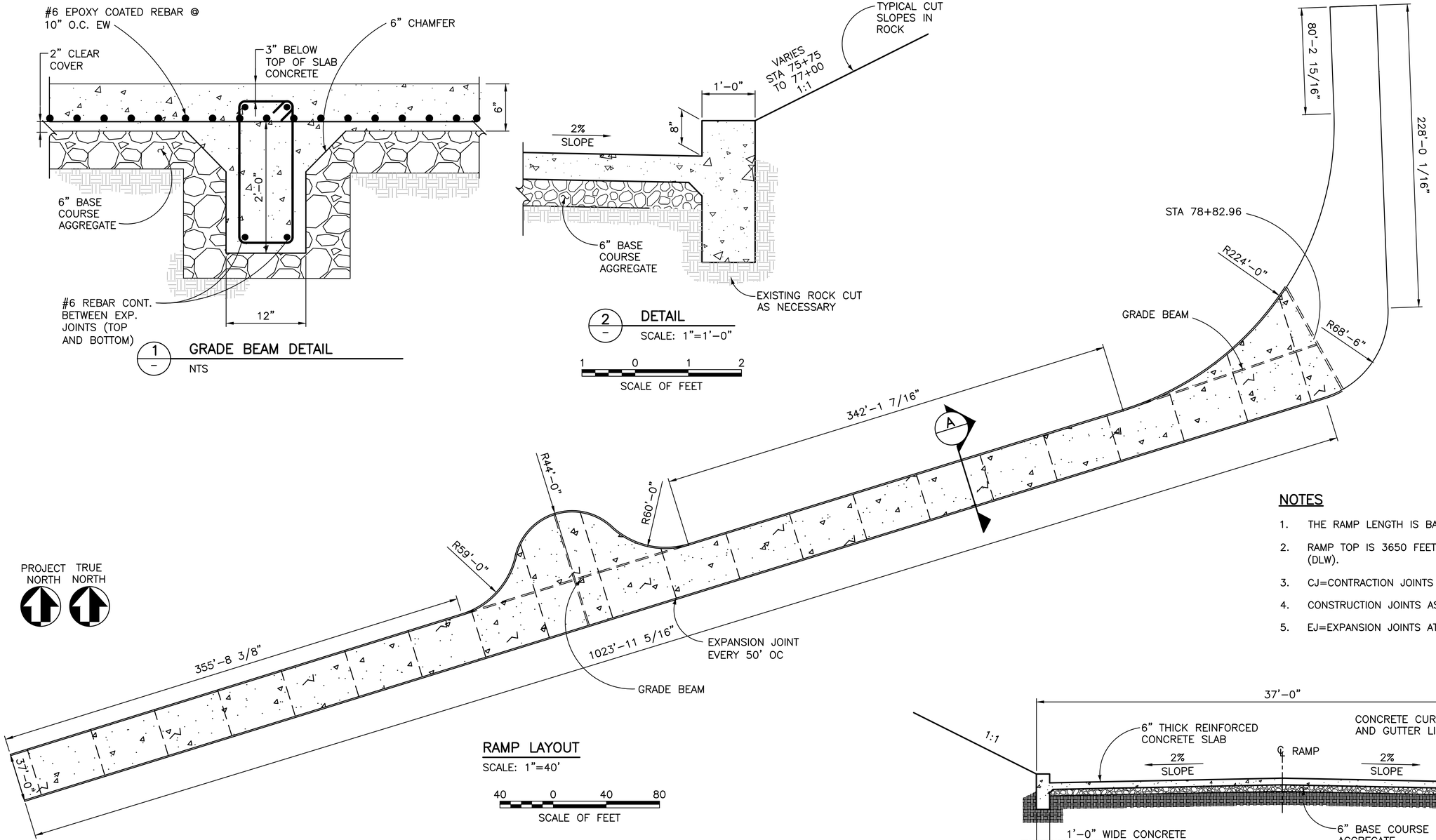

RAMP LAYOUT
SCALE: 1"=40'

40 0 40 80
SCALE OF FEET

NOTES

1. THE RAMP LENGTH IS BASED ON A SLOPE OF 16%.
2. RAMP TOP IS 3650 FEET (DHW) AND RAMP TOE IS 3529.34 FEET (DLW).
3. CJ=CONTRACTION JOINTS SHALL BE PLACED EVERY 12 FEET O.C.
4. CONSTRUCTION JOINTS AS REQUIRED FOR CONSTRUCTION.
5. EJ=EXPANSION JOINTS AT 50 FEET OC AS SHOWN ON PLANS.

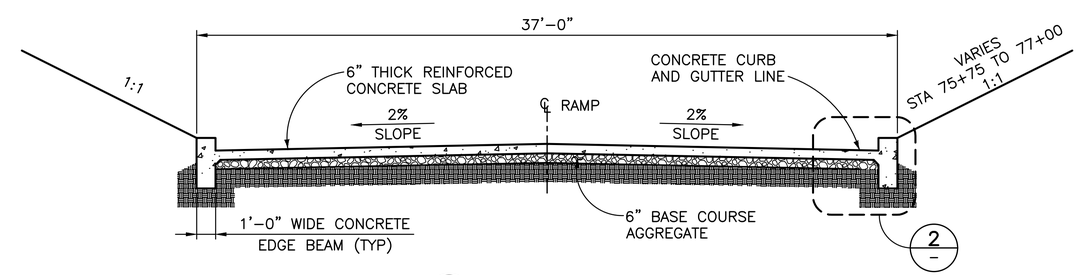

A TYPICAL SECTION
SCALE: 1/8"=1'-0"

8 0 8 16
SCALE OF FEET

DESIGNED: T.DONOVAN CADD: H.MORTON TECH. REVIEW: A.SWAFFORD DATE: 7/6/25	SUB SHEET NO. S3	TITLE OF DRAWING STRUCTURAL HITE LAUNCH RAMP LAUNCH RAMP LAYOUT AND SECTION GLEN CANYON NATIONAL RECREATION AREA	DRAWING NO. 608 / 194760 PMIS/PKG NO. 318878 SHEET 22 OF 23

7/6/2025 5:26:20 PM C:\pw_workdir\den003\hailey.olguin@jacobs.com\d1482929\318878-S3_Lay.dwg

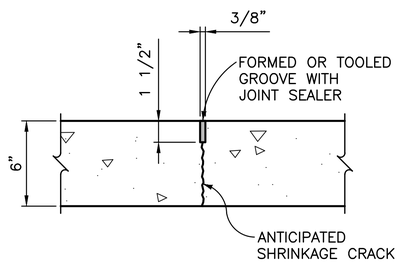

1 — CONTRACTION JOINT DETAIL TRANSVERSE AND LONGITUDINAL
NTS

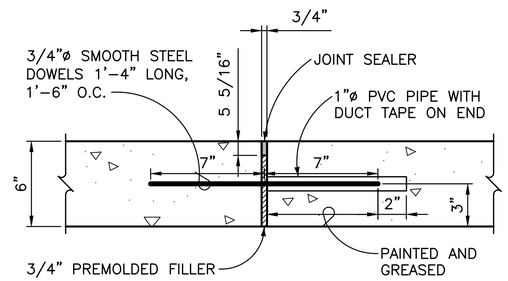

2 — EXPANSION JOINT DETAIL TRANSVERSE AND LONGITUDINAL
NTS

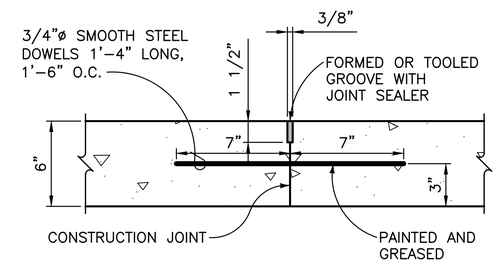

3 — CONSTRUCTION JOINT DETAIL TRANSVERSE AND LONGITUDINAL
NTS

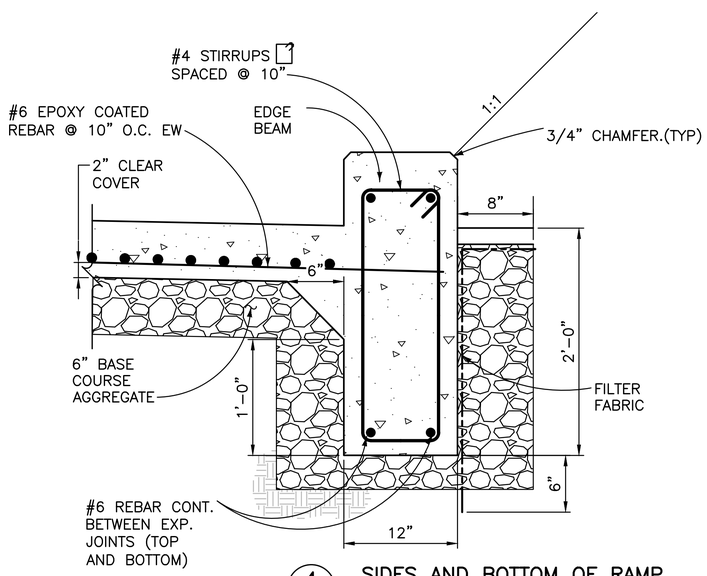

4 — SIDES AND BOTTOM OF RAMP
NTS

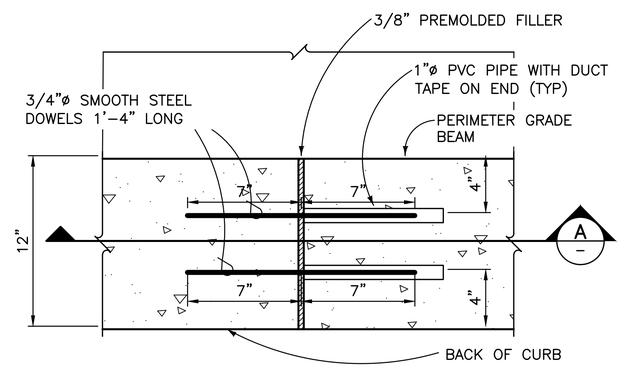

5 — EXPANSION JOINT AT THE EDGE BEAMS – PLAN VIEW
NTS

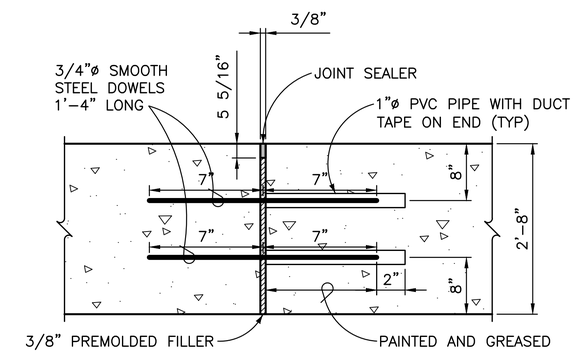

A — SECTION
NTS

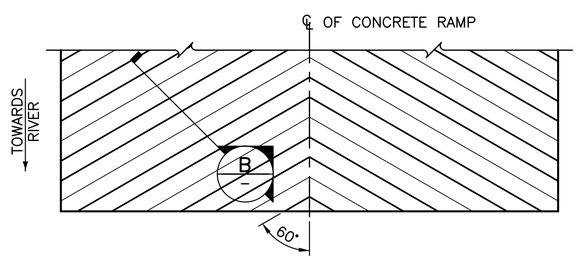

PLAN

6 (S3) — TYPICAL RAMP GROOVE
NTS

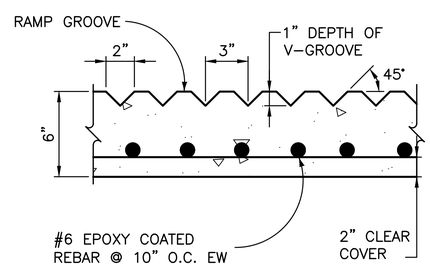

B — SECTION
NTS

DESIGNED: T.DONOVAN CADD: H.MORTON TECH. REVIEW: A.SWAFFORD DATE: 7/6/25	SUB SHEET NO. S4	TITLE OF DRAWING STRUCTURAL HITE LAUNCH RAMP TYPICAL RAMP DETAILS GLEN CANYON NATIONAL RECREATION AREA	DRAWING NO. 608 / 194760 PMIS/PKG NO. 318878 SHEET 23 OF 23

6/16/22 11:42 FLORESE R22 C:\PW_WORKDIR\DEN003\CH2MHILL_FLORESE\D1353889\SK-013 RAMP TYPICAL DETAILS.DWG XREFS: ..\D1318626\XG-BORDER_GLCA_EXH.DWG;