Statement of Work (SOW) – Fabrication of Replacement Entrance Station Sign

Fort Pulaski National Monument

Required Services
The contractor shall provide all labor, tools, equipment, materials and supervision required to fabricate, deliver, remove, and install a replacement double-sided entrance sign for Fort Pulaski National Monument (FOPU.)

Work includes:

- Removal and disposal of existing sign panels and components
- Fabrication of new HDU sign panels per approved drawings
- Installation onto existing sign structure
- Site protection, restoration, and cleanup
- Coordination with National Park Service (NPS) and Harpers Ferry Center (HFC)

This work shall be completed in accordance with the specifications, drawings, and requirements included in this SOW and associated attachments.

Appendix 1 – Photos and Maps of Location of Work
Appendix 2 – Drawing Specifications for New Sign for Fabrication
Appendix 3 – Fabrication Specifications for Previous Sign. Can be used to inform mounting and existing sign base measurement.

Location of Work.
Fort Pulaski National Monument
Deliver to – 50 Cockspur Island Road
Savannah GA, 31410

Period of Performance
Within 15 days after award, unless otherwise negotiated and agreed by park and Contracting Officer (CO.)

1. General Requirements

- Contractor shall manage all work and act as single point of contact.
- All sites are to be left clean and orderly at the end of each day. No materials are to be left onsite that are not easily secured. The park assumes no liability for any equipment not properly secured that is stolen, missing, or damaged over the course of the contract period of performance.
- Disposal of any demolished building, site, or landscape materials will be done in accordance with applicable state and local laws. Park waste management facilities may not be used for disposal of any construction material.
- Site is to be closed to all visitors and vehicle traffic while work is being performed as well as while the site is left unattended. This is to be done with signage and appropriate, neatly placed closures such as stanchions, construction fencing, cones, or other sturdy materials.

- The Contractor must exercise care and caution in all activities performed on or near historic structures, landscapes, and other National Park Service (NPS) properties. Measures must be taken to protect the landscape and surrounding areas from damage during the execution of the work, ensuring that no harm comes to the landscapes, sites, or park structures throughout the project.
- The Contractor is to stop work and alert the park's contracting officer representative (COR) or other authorized management representatives of any accidental damage immediately so that it can be documented and handled according to proper NPS procedure.
- The Contractor will be held responsible for all restoration of the site, both landscape and building, if damaged while work is performed. The restoration must bring the worksite to the appearance and condition that existed prior to the work being performed. The Contractor is responsible for cleanup, removal, and disposal of any debris associated with their installation of equipment and restoration of the building if damaged.
- All planned service interruptions must be coordinated with the park, and the time-of-service interruption must be as short as possible. The park shall be notified of any scheduled utility or access interruptions as early as possible, but no less than 48 hours prior to any planned interruption. The Contractor shall inform the government as soon as it is known that there may be an unplanned interruption.

2. Project Specific Requirements

2.1 Demolition and Removal

- Remove existing entrance station sign panels and associated hardware
- Coordinate with park staff prior to removal
- Dispose of materials off-site in compliance with regulations
- Install new signage prior to removal if required for visitor safety

2.2 Fabrication

Fabricate two (2) double-sided identity sign panels in accordance with FOPU drawing package. **Specifications and measurements below must be cross-referenced with drawing specifications provided.**

- Panel Description
  - Size: 114" W × 43.75" H
  - Material: High Density Urethane (HDU) foam, minimum 20 lb density
  - Thickness: 1.5 inches (single piece, no laminations)
- Construction Requirements
  - Panels fabricated from one solid piece (no splicing)
  - All edges rounded to 1/8" radius
  - Fully sealed, primed, and painted on all sides
- Routing & Graphics
  - NPS Rawlinson Heavy (V-carved) typography
  - Frutiger Bold (flat routed) typography
  - Routed dado between panel and overbar: Depth: 0.25", Height: 0.5"
- Arrowhead

    - **Arrowhead routing specifications provided as separate attachment must be cross-referenced with specifications provided.**
    - Routed inset NPS arrowhead: Depth: 0.5", Oversized cutout for inset fit
- Paint System
    - Primer: Matthews White Epoxy Primer (or approved equal)
    - Finish: Matthews Satin VOC Semi-Gloss
- Color Scheme
    - Overbar: NPS River Rock (PMS 449)
    - Background: Northwood Brown (PMS 7531)
    - Typography: Warm Gray 1
    - Arrowhead: Standard NPS palette
- Quality Standards
    - Clean edges, no overspray, drips, or imperfections
    - All routed surfaces sanded smooth
    - Fit and finish must meet architectural-grade sign standards

2.3 Mounting

- Mount panels to existing double-sided sign base. **Shop drawings from initial base construction are provided as attachments.**
- Contractor responsible for:
    - Verifying compatibility
    - Verifying measurements with site visit prior to bid/fabrication.
    - Providing mounting hardware
    - Ensuring structural integrity

2.4 Project Management

- Contractor shall coordinate post-award meeting, pre-installation meeting, and final walkthrough.
- Project manager shall be the primary and single point of contact with the COR, and shall maintain weekly e-mail communication
- All fabrications shall be inspected prior to delivery

3. Additional Requirements

3.1 Field Verification of Quantities Prior to Bid

- Quantities provided in drawings, photos, or other documentation are approximate and for reference only.
- The awarded Contractor shall be responsible for field measuring all areas, confirming extents of damage, and identifying access constraints.
- Failure to perform field verification shall not be grounds for additional compensation.
- The Contractor shall account for all labor, materials, protection, and coordination necessary to complete the work as described.
- Any discrepancies between observed conditions and contract documents shall be brought to the attention of the COR prior to bid submission.

3.2 Miscellaneous Requirements

- All work will be performed in a safe, professional manner according to accepted, required, and mandated industry standards.
- The Contractor is responsible for all permits from State, County, or Local offices.

4. Deliverables

- Contractor shall provide:
  - Project schedule
  - Shop drawings (dimensions, materials, finishes)
  - Panel layouts and typography
  - Hardware details
  - Product data and catalog cuts
  - Samples (if requested)
- Closeout
  - Maintenance and warranty plan for coatings and hardware
  - Final site inspection report signed by Contractor and COR or authorized park management representative
  - Warranty certificates as applicable
  - Waste disposal records to demonstrate compliant disposal

In the absence of other agreements negotiated with respect to time provided for government review, deliverables will be inspected and the Contractor notified of the COR or other authorized management representative findings within 15 business days of normally scheduled review. If the deliverables are not acceptable, the COR or other authorized management representative will notify Contractor immediately.

5. Government Furnished Staff, Property, Materials & Supplies

None.

6. Business Hours

The Contractor shall complete on-site work during normal business hours of 7:30 am to 4:30 pm, Monday through Friday, excluding Federal holidays. The Contractor shall coordinate specific on-site work schedule with the CO and COR five days prior to performance start date. While on site, the COR or authorized management representative may be reached by mobile phone during normal business hours. Any work outside of normal business hours shall be pre-approved by the COR or other authorized management representative.

7. Site Access and Use

The NPS issues access to government property as needed. The Contractor shall initiate and coordinate all necessary access approvals no later than 15 days before the project's start date.

Access and use of NPS sites and property is limited to scheduled execution of contract work only. Contractor personnel shall not:

a) enter closed sites outside of approved working hours
b) use access credentials such as keys or codes for any purposes other than authorized work

c) visit, tour, recreate, or otherwise remain on the site for personal reasons at the end of the workday unless entering as a private citizen in accordance with park visitation rules and regulations of applicable entrance fees and operating hours, Superintendents Compendium, and other policy and law
d) bring non-authorized personnel onto the site during working hours, or
e) use site facilities, roads, trails, vehicles, equipment, utilities, or communications systems for personal or non-work purposes.

Misuse of site access can result in removal from the site, revocation of access, or termination for cause. The Contractor shall ensure all subcontractors and suppliers comply with this clause.

8. Performance Management
The Contractor shall manage the total work effort in accordance with effective and efficient management principles and safe working practices to ensure the successful completion of contract work. The Contractor shall immediately bring problems or potential problems affecting performance to the attention of the COR or other authorized management representatives. Problems affecting a particular action should be resolved prior to starting the specific task.

9. Contracting Officer's Representative or Authorized Park Management Representative
Emily Forlenza
Chief of Facility Management
50 Cockspur Island Road
Savannah, GA 31410

10. Onsite Project Manager
Emily Forlenza
Chief of Facility Management
50 Cockspur Island Road
Savannah, GA 31410

11. Safety & Environmental Compliance
- The Contractor shall comply with pertinent provisions of all applicable federal, state, and local safety and environmental regulations.
- The COR or authorized management representative has the authority to issue restraint or cease-and-desist orders to the Contractor when violations or unsafe acts are present and threaten Government and Contractor employees or damage Government property.
- The Contractor shall immediately stop work and report officer all accidents resulting in employee injury or death or damage to property while performing this contract to the COR or other authorized management representative of all accidents resulting in employee injury or death or damage to property while performing this contract.

12. Applicable Standards and Regulations
- The Contractor shall conform to, and be compliant with, all applicable laws, rules and regulations, local construction codes, and established industry standards. The standards shall be applied during the engineering, fabrication, assembly, wiring, installation, testing, operation, maintenance, and management of the system(s) and service(s).

- If a conflict arises between standards, the Contractor shall submit written request for clarification citing the specific particulars to the Contracting Officer. The Contracting Offer will respond with written directions.

13. Insurance

- The Contractor shall maintain insurance coverage in accordance with applicable federal, state, and local requirements, as specified in the contract.
- The NPS shall not be responsible for loss or damage to the Contractor's equipment or property.
- The Government will not accept any liability due to Contractor employee negligence.

14. Invoices

Invoices shall clearly identify work performed, deliverables completed, and applicable task order or contract references. Invoices that do not include sufficient detail may be returned as improper invoices.

Appendix 1 – Photos and Map of Location of Work

Current entrance station sign at Fort Pulaski, facing west

Current entrance station sign at Fort Pulaski, facing east

Map of installation location in relation to fort, with work area circled

Appendix 2 – Drawing Specifications for New Sign for Fabrication

(this page intentionally blank, see next page)

Fort Pulaski National Monument

Identity Sign

04-24-2026

FOPU-2026-1524-ID

Harpers Ferry Center
Harpers Ferry, WV 25425

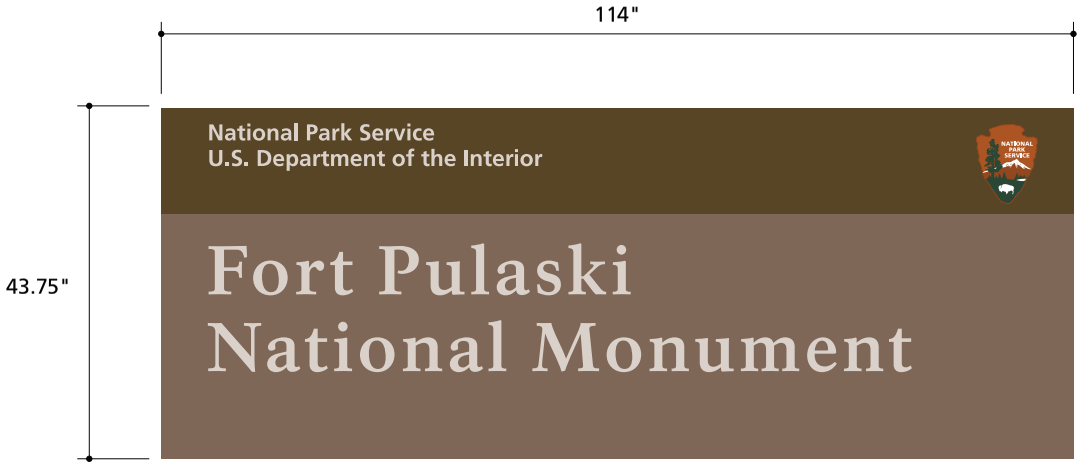

Identity Sign Panel - Qty 2

Routed and Painted HDU Foam Sign Panel
with inset routed and Painted HDU Foam NPS Arrowhead

Mount to existing double-sided sign base

NPS Arrowhead

Routed and Painted HDU Foam
Inlaid into sign panel

Identity Panel Colors

MP63853
PMS 7531
C16 M29 Y38 K53
ID Panel

MP63852
PMS 449
C31 M38 Y75 K76
ID Overbar

Old Prairie MP63854
White or PMS Warm Gray 1
C3 M3 Y6 K7
Typography

Arrowhead Colors

NPS 1605 Brown MP68246
PMS 1605
C06 M71 Y100 K32
Background

NPS 1615 Brown MP62376
PMS 1615
C10 M72 Y100 K46
Mountain and Border

MP68247
PMS 553
C82 M30 Y65 K76
Trees / Grass

White
Typography, Bison, Snow, Water

Fort Pulaski National Monument	Description | Notes	Project Number	
		FOPU-2026-1524-ID	
Identity Sign		Drawing Date	Page
National Park Service | Harpers Ferry Center | Media Development | Signs	Scale: 1/2" = 1'-0"	04/24/2026	**1.0**

Material Overview and Fabrication Specifications

High Density Foam (HDU) for NPS Park Identity Signs:

Panel Material:
Sign panels are to be constructed of high density urethane closed cell rigid foam with a minimum density of 20 lbs per cubic foot. The contractor must select an HDU foam widely used in the outdoor sign industry and follow all manufacturers specifications for painting, routing, and hardware attachment.

Panel Size:
Sign panel shall be fabricated based on dimensions and format specified in the Sign Drawing Package. Panel sizes, specifications, dimensions, typography, color, and proportions shall not be altered.

Panel Assembly:
Each panel shall be constructed from a single piece of HDU foam, sealed and finished on all sides. Splicing or joining of foam sheets is not acceptable.

Panel thickness prior to painting shall be 1-1/2". All surfaces shall be finish sanded smooth and face and back edges shall rounded to a radius of 1/8".

Graphic Layout:
Graphic layout of panels shall be as shown on the attached drawings. Graphics to be accurately reproduced from plotted outline template or directly from computer to router based on full size digital vector art. Contractor shall use an accurate grid to ensure layout is aligned vertically and horizontally.

Typography shall be NPS Rawlinson Heavy and Frutiger Bold as shown on attached drawings. Typography shall not be altered, manipulated, or changed. Substitute fonts shall not be used.

NPS Rawlinson Heavy shall be Machine-routed with a 90 degree "V" router bit with a 1/8" vertical, flat sidewall inset. Routed letters shall conform to the same size artwork. Routing depth shall be uniform. Corners of type smaller than 3" cap height shall have a radius no greater than 0.0625. Type larger than 3" cap height shall have a corner radius no greater than 0.125".

Frutiger Bold typography shall be Machine-routed using a vertical-sided, flat-bottom router bit. Routing depth to be 0.375".

A 0.250" deep dado shall be routed in the panel between the main panel and the overbar. Dado height shall be 0.5 inches. Dado shall be routed in to the main panel field with the overbar being full height. Routed dado shall be painted same color as the overbar.

Panels shall be Machine-routed to receive an NPS arrowhead to a depth of 0.5" using a vertical-sided, flat-bottom router bit. Arrowhead shiloutte routed in the sign panel shall be oversized by 1/8" to accommodate inset NPS Arrowhead.

All routed type, dados, and insets shall be sanded smooth and clean. All edges shall be free of burrs and all edges eased prior to application of primer coats and paint.

Paint:
Prior to painting panels shall be finish sanded smooth. Panels shall not be finished with hand planes, hand-held belt, orbital, or vibrating sanders. All dust and sanding residue shall be removed from the sign. Panel shall be properly cleaned per paint manufacturer's instructions.

Panels shall be sprayed using a VOC compliant, Mathews White Epoxy Primer (or approved equal) on all surfaces. Primer coats shall be applied in strict accordance with the paint and HDU foam manufacturers' specifications.

Final top coat colors shall be a Matthews Satin VOC, Semi Gloss finish or approved equal applied per the graphic layouts.

1. Panel Overbar and dado between main panel face and overbar shall be NPS River Rock (Matthews Paint MP63852, PMS 449), Satin VOC Semi Gloss (or approved equal). The Overbar color shall wrap to panel sides;

2. Main Panel Face, sides, and panel back shall be Northwood Brown (Matthews MP63853, PMS 7531) Satin VOC Semi Gloss (or approved equal);

3. Panel Typography shall be Matthews MP63854, PMS Warm Gray 1, Satin VOC Semi Gloss (or approved equal).

Edges between type, dados, and flat panel sections shall be clean and sharp. Ragged edges and transitions, drips, and oversprays and not acceptable.

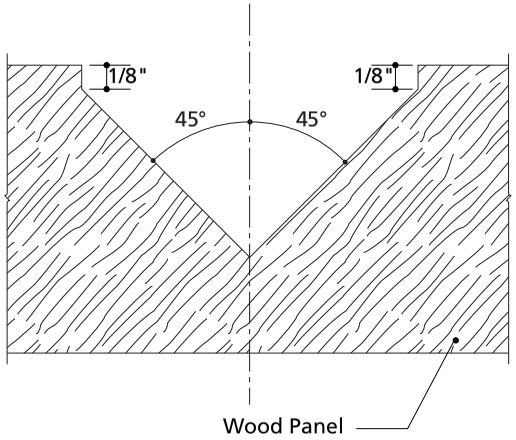

Routed NPS Rawlinson Typography Section Cut

Full Scale

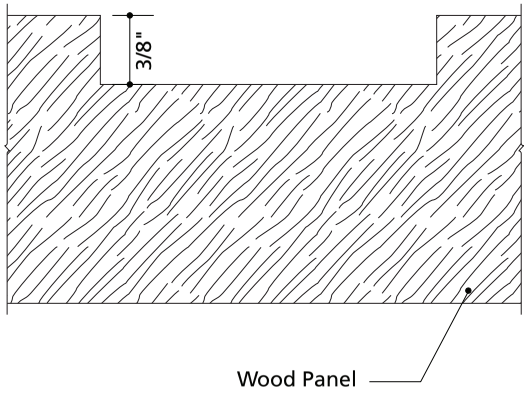

Routed Frutiger Typography Section Cut

Full Scale

Fort Pulaski National Monument	Description | Notes	Project Number	
		FOPU-2026-1524-ID	
Identity Sign		Drawing Date	Page
National Park Service | Harpers Ferry Center | Media Development | Signs	Scale: 1/2" = 1'-0"	04/24/2026	**2.0**

Appendix 3 – Fabrication Specifications for Previous Sign. Can be used to inform mounting and existing sign base measurement.

(this page intentionally blank, see next page)

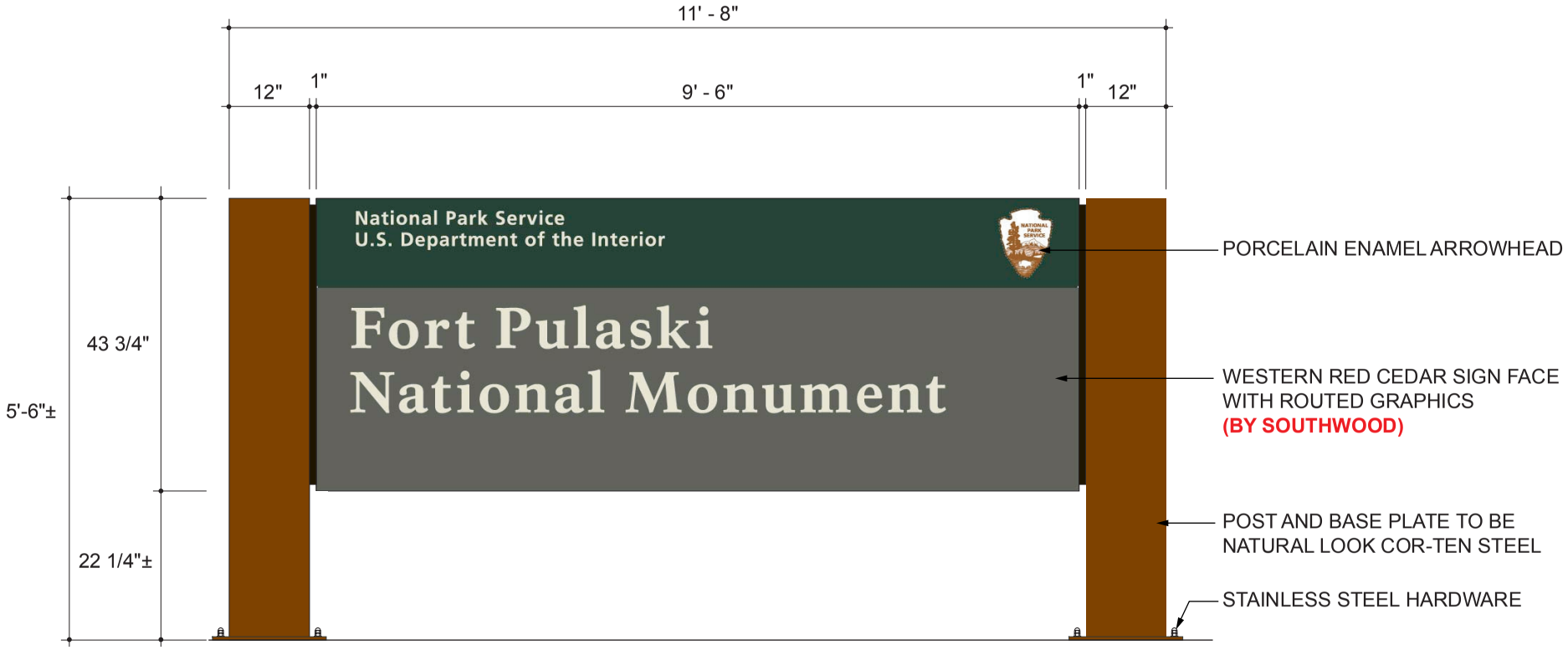

A / G1a **SIGN TYPE PI-2GA ELEVATION (SIDE A)**
SCALE: 1/2" = 1' - 0"

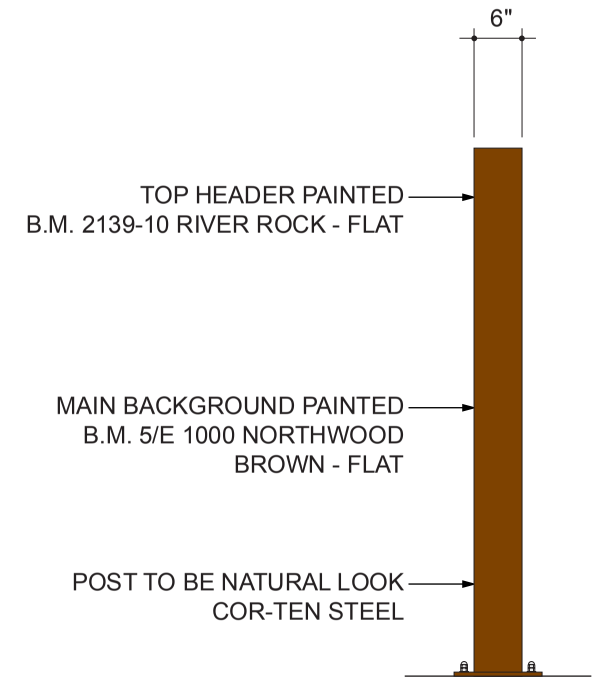

A.1 / G1a **SIDE VIEW)**
SCALE: 1/2" = 1' - 0"

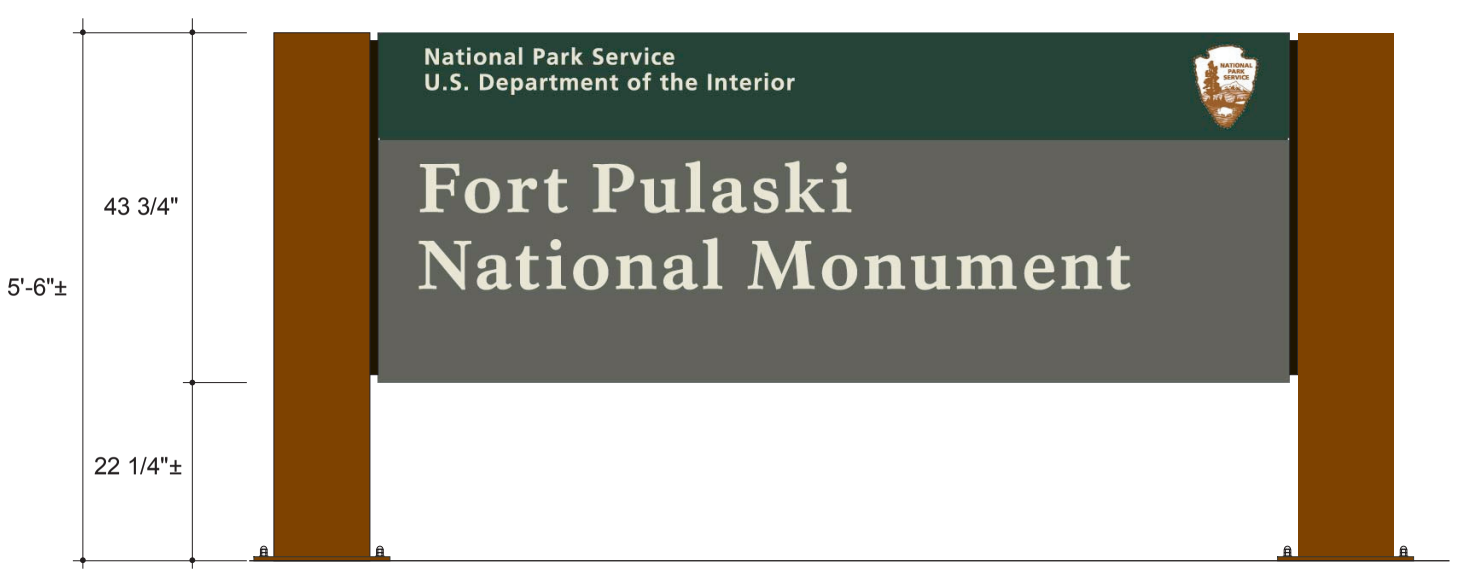

A.2 / G1a **SIGN TYPE PI-2GA ELEVATION (SIDE B)**
SCALE: 1/2" = 1' - 0"

Sales Order #:
1000049

Client:
National Park Service

Project:
Fort Pulaski
National Monument

Project Manager:
Todd Turner

Drawn By:
Harry Kourniotis

Date:
12.12.05

Scale:
As Noted

Revision:
0

Signtype:
PI-2GA

Quantity:
1

Product Code:
Custom

Drawing Description:

GRAPHIC & COLOR SPECIFICATIONS

Typestyle:
NPS Rawlinson Roadway
Frutiger Bold

Color Specifications:

All Routed Copy:
BM 2143-50 Old Prairie (Soft Gloss)

Raised Header & Routed Area
For Logo:(Front, Back, Edges)
BM 2139-10 River Rock (Flat)

Raised Main Background:
(Front, Back, Edges)
Bm 5/E 1000 Northwood Brown
(Flat)

Notes:

BUNTING

Bunting Graphics, Inc.
20 River Road
Verona, PA 15147-1159
Tel. 412-820-2200
FAX 412-820-4404
e-mail: mail@buntinggraphics.com

This drawing was prepared in accordance with information submitted. Changes to drawings may incur charges as stated in the price list. Signed approval of submitted drawing is required prior to manufacture. Approval of drawing acknowledges that it is correct and supersedes all previous sets of drawings and/or specifications related to this order.

Any changes, corrections or remakes of products manufactured in accordance to approved drawings will be at purchaser's expense. Confidential and proprietary information of Bunting Graphics, Inc. may not be used or reproduced without Bunting's prior written consent. No part of this drawing, design, arrangement or idea thereon shall be duplicated or used for any purpose without express written permission of Bunting Graphic.

Bunting is not responsible for furnishing Primary Electrical Service to sign locations.

Date _____ ☐ Approved
Name _____ ☐ Approved as Noted
Company _____ ☐ Revise and Resubmit

Drawing File:
X:/Nps/All Parks/F/FOPU/S.O./1000049/Drawings/FOPU-PI-2GA/.ai

Production File:
N/A

QUANTITY'S ARE BASED ON ONE (1) SIGN

BILL OF MATERIAL

ITEM	PART #	DESCRIPTION	QUANTITY	SIZE	WEIGHT (LBS)	NOTES
1	-	POST - 6" x 12" x 1/8" BRAKE FORMED CORTEN STEEL	4 PCS	5'-6"± LONG	6.87 LB/FT	
2	-	MOUNTING PLATE - 1/2" THICK STEEL PLATE.	2 PCS	11" x 17"	20.42 LB/SQ FT	
3	-	CENTER SUPPORT - 2" x 2" x 3/16" STEEL STRUCTURAL ANGLE.	1 PC	41 3/8" LONG	2.44 LB/FT	TREAT WITH X-I-M PRIMER.
4	-	BRAKEFORMED CHANNEL - 3/16" THICK STEEL PLATE.	SEE DETAIL A/C1b	SEE DETAIL A/C1b & C.4/C1d	7.66 LB/SQ FT	TREAT WITH X-I-M PRIMER.
5	-	BRAKEFORMED TOP Z-CLIP - 3/16" THICK STEEL PLATE.	6 PCS	SEE DETAIL C.5/C1d & C.5a/C1d	7.66 LB/SQ FT	TREAT WITH X-I-M PRIMER.
6	-	BRAKEFORMED BOTTOM Z-CLIP - 3/16" THICK STEEL PLATE.	6 PCS	SEE DETAIL C.6/C1d & C.6a/C1d	7.66 LB/SQ FT	TREAT WITH X-I-M PRIMER.
7	McMASTER 92240A624	3/8 - 16 x 1" LONG SST. HEX HEAD CAP SCREW WITH SST. FLAT WASHER.	6 PCS	AS NOTED	N/A	-
8	-	NOT USED	-	-	-	-
9	-	SIGN FACE - 1-1/2" THICK WESTERN RED CEDAR - **BY SOUTHWOOD.**	2 PCS	3' - 7 3/4" x 9'-6"	N/A	-
10	-	POST CAP - 3/16" THICK STEEL PLATE.	2 PCS	11" x 17"	7.66 LB/SQ FT	TREAT WITH X-I-M PRIMER.
11	McMASTER 91855A033	1/2 - 13 SST. ACORN NUT.	8 PCS	AS NOTED	N/A	-
12	McMASTER 92673A137	1/2 - 13 SST. HEX NUT.	16 PCS	AS NOTED	N/A	-
13	McMASTER 98019A509	1/2" SST. FLAT WASHER.	16 PCS	AS NOTED	N/A	-
14	-	NOT USED	-	-	-	-
15	McMASTER 91607A247	No.10 x 1" LONG SST. PAN HEAD SLOTTED WOOD SCREW.	36 PCS	AS NOTED	N/A	-
16	McMASTER 91603A160	1/2 - 13 x 12" LONG HOT-DIPPED GALVANIZED STEEL L-HOOKED ANCHOR BOLT.	8 PCS	AS NOTED	N/A	BUNTING TO SUPPLY TEMPLATE ALONG WITH ANCHOR BOLTS.
17	-	CORNER CLIP - 2" x 2" x 3/16" STEEL STRUCTURAL ANGLE.	4 PCS	2 - 1/2" LONG	2.44 LB/FT	TREAT WITH X-I-M PRIMER.

Sales Order #: 1000049
Client: National Park Service
Project: Fort Pulaski National Monument
Project Manager: Todd Turner
Drawn By: Harry Kourniotis
Date: 12.12.05
Scale: As Noted
Revision: 0
Signtype: PI-2GA
Quantity: 1
Product Code: Custom

Drawing Description:

CONSTRUCTION SPECIFICATIONS

Notes:

BUNTING

Bunting Graphics, Inc.
20 River Road
Verona, PA 15147-1159
Tel. 412-820-2200
FAX 412-820-4404
e-mail: mail@buntinggraphics.com

This drawing was prepared in accordance with information submitted. Changes to drawings may incur charges as stated in the price list. Signed approval of submitted drawing is required prior to manufacture. Approval of drawing acknowledges that it is correct and supersedes all previous sets of drawings and/or specifications related to this order.

Any changes, corrections or remakes of products manufactured in accordance to approved drawings will be at purchaser's expense. Confidential and proprietary information of Bunting Graphics, Inc. may not be used or reproduced without Bunting's prior written consent. No part of this drawing, design, arrangement or idea thereon shall be duplicated or used for any purpose without express written permission of Bunting Graphic.

Bunting is not responsible for furnishing Primary Electrical Service to sign locations.

Date _____ ☐ Approved
Name _____ ☐ Approved as Noted
Company _____ ☐ Revise and Resubmit

Drawing File: X:/Nps/All Parks/F/FOPU/S.O./1000049/Drawings/FOPU-C1a/.ai
Production File: N/A

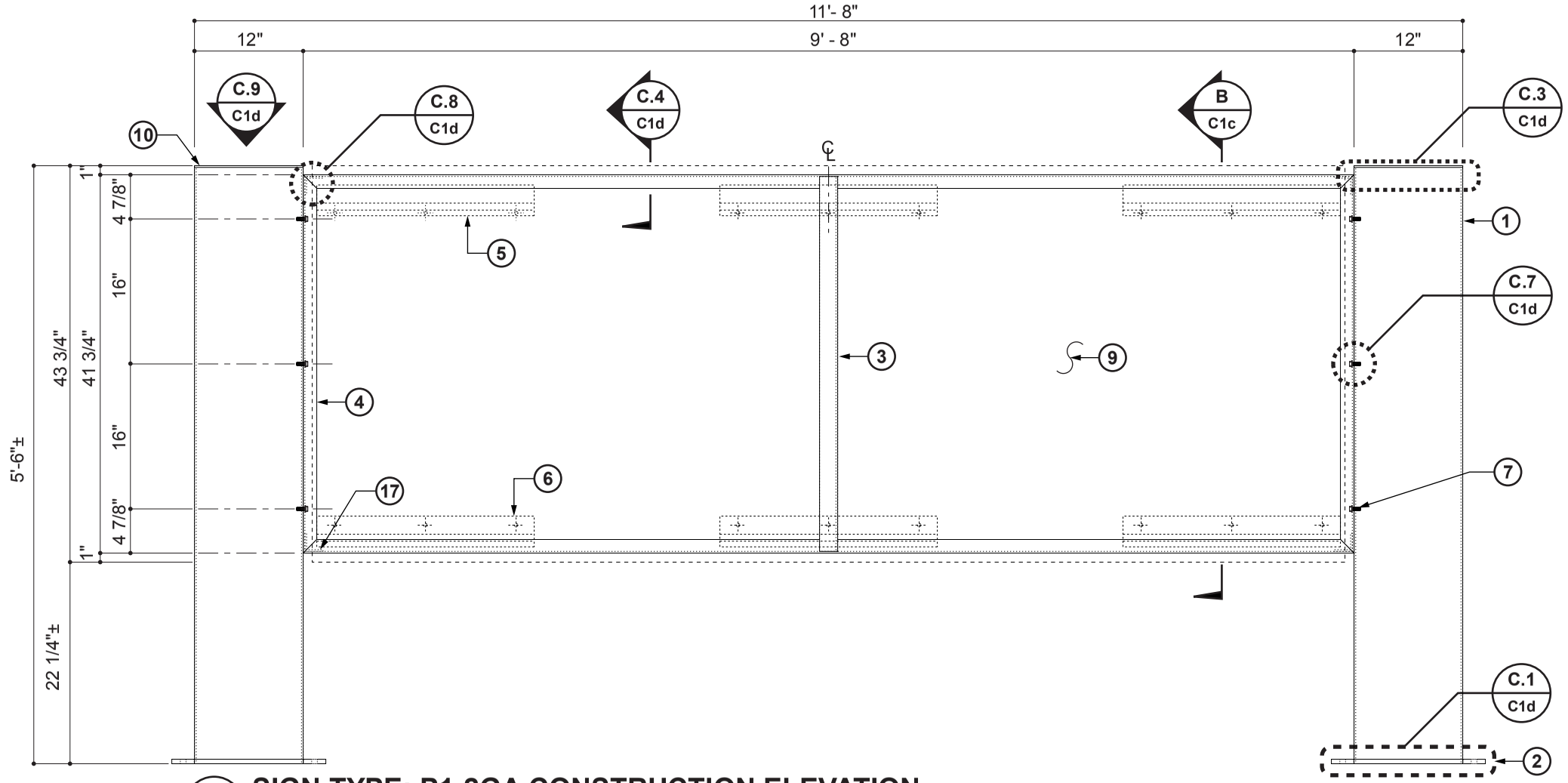

A / C1b SIGN TYPE: P1-2GA CONSTRUCTION ELEVATION

SCALE: 3/4" = 1' - 0"

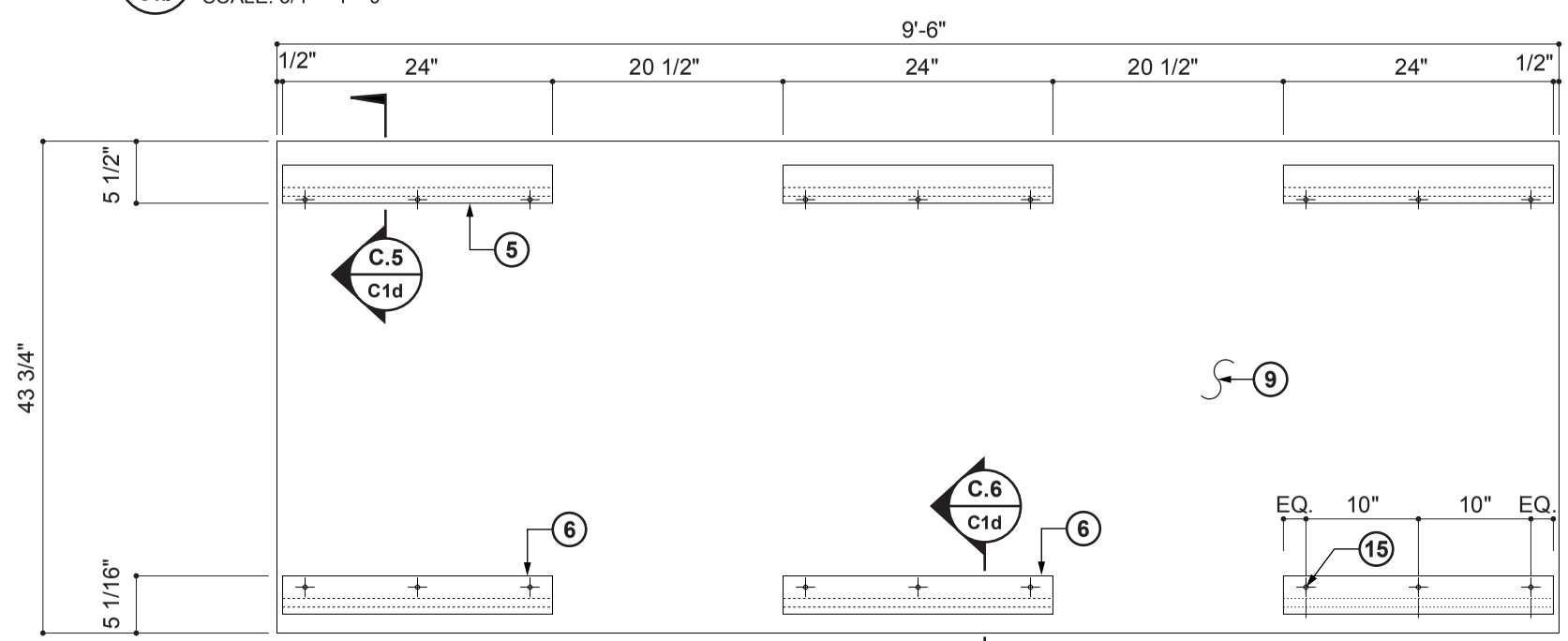

A.1 / C1b Z-CLIPS LOCATION BACK VIEW

3/4" = 1' - 0"

Sales Order #:	1000049
Client:	National Park Service
Project:	Fort Pulaski National Monument
Project Manager:	Todd Turner
Drawn By:	Harry Kourniotis
Date:	12.12.05
Scale:	As Noted
Revision:	0
Signtype:	PI-2GA
Quantity:	1
Product Code:	Custom

Drawing Description:

CONSTRUCTION SPECIFICATIONS

Notes:

BUNTING

Bunting Graphics, Inc.
20 River Road
Verona, PA 15147-1159
Tel. 412-820-2200
FAX 412-820-4404
e-mail: mail@buntinggraphics.com

This drawing was prepared in accordance with information submitted. Changes to drawings may incur charges as stated in the price list. Signed approval of submitted drawing is required prior to manufacture. Approval of drawing acknowledges that it is correct and supersedes all previous sets of drawings and/or specifications related to this order.

Any changes, corrections or remakes of products manufactured in accordance to approved drawings will be at purchaser's expense. Confidential and proprietary information of Bunting Graphics, Inc. may not be used or reproduced without Bunting's prior written consent. No part of this drawing, design, arrangement or idea thereon shall be duplicated or used for any purpose without express written permission of Bunting Graphic.

Bunting is not responsible for furnishing Primary Electrical Service to sign locations.

Date _____ ☐ Approved

Name _____ ☐ Approved as Noted

Company _____ ☐ Revise and Resubmit

Drawing File:
X:/Nps/All Parks/F/FOPU/S.O./1000049/Drawings/FOPU-C1b/.ai

Production File:
N/A

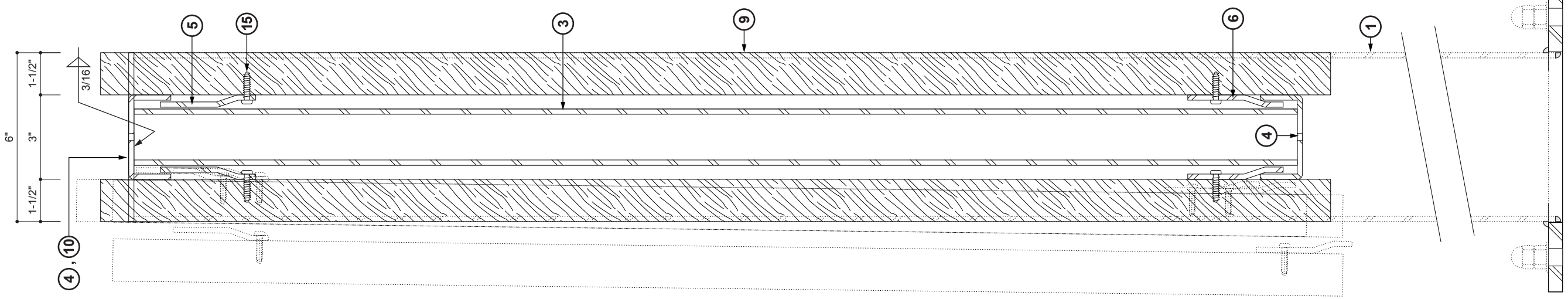

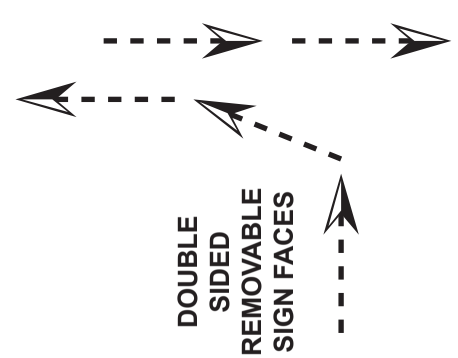

B C1c **SIGN TYPE PI-2GA CONSTRUCTION SECTION**

SCALE: 1/4" = 1"

Sales Order #:	1000049
Client:	National Park Service
Project:	Fort Pulaski National Monument
Project Manager:	Todd Turner
Drawn By:	Harry Kourniotis
Date:	12.12.05
Scale:	As Noted
Revision:	0
Signtype:	PI-2GA
Quantity:	1
Product Code:	Custom

Drawing Description:

CONSTRUCTION SPECIFICATIONS

Notes:

BUNTING

Bunting Graphics, Inc.
20 River Road
Verona, PA 15147-1159
Tel. 412-820-2200
FAX 412-820-4404
e-mail: mail@buntinggraphics.com

This drawing was prepared in accordance with information submitted. Changes to drawings may incur charges as stated in the price list. Signed approval of submitted drawing is required prior to manufacture. Approval of drawing acknowledges that it is correct and supersedes all previous sets of drawings and/or specifications related to this order.

Any changes, corrections or remakes of products manufactured in accordance to approved drawings will be at purchaser's expense. Confidential and proprietary information of Bunting Graphics, Inc. may not be used or reproduced without Bunting's prior written consent. No part of this drawing, design, arrangement or idea thereon shall be duplicated or used for any purpose without express written permission of Bunting Graphic.

Bunting is not responsible for furnishing Primary Electrical Service to sign locations.

Date _____ ☐ Approved

Name _____ ☐ Approved as Noted

Company _____ ☐ Revise and Resubmit

Drawing File:
X:/Nps/All Parks/F/FOPU/S.O./1000049/Drawings/FOPU-C1c/.ai

Production File:
N/A

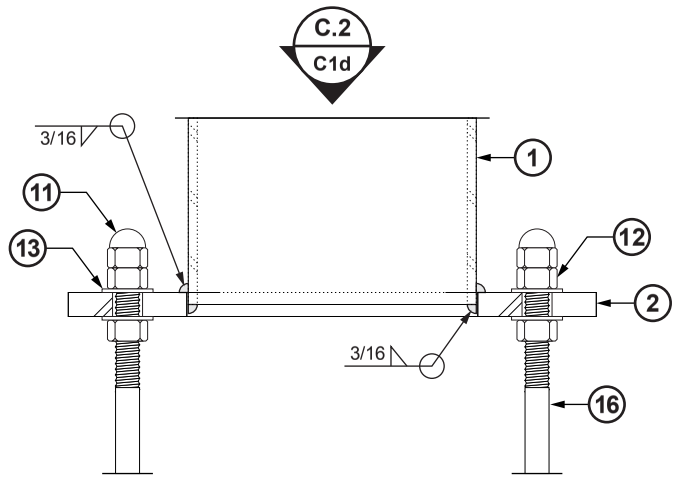

C.1 / C1d BASEPLATE ATTACHMENT DETAIL
SCALE: 1/4" = 1"

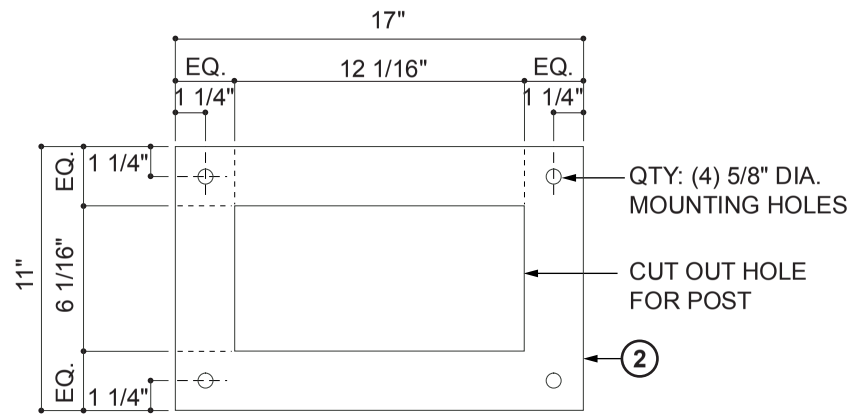

C.2 / C1d BASEPLATE CUT DETAIL
SCALE: 1/8" = 1"

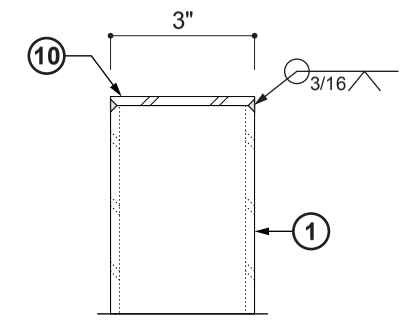

C.3 / C1d POST CAP ATTACHMENT DETAIL
SCALE: 1/4" = 1"

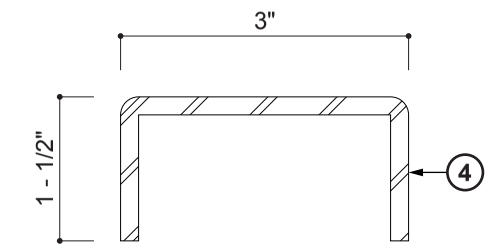

C.4 / C1d BRAKEFORMED CHANNEL SECTION
SCALE: 1/2" = 1"

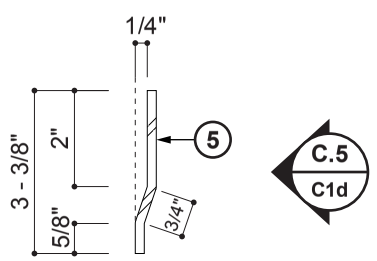

C.5 / C1d BRAKEFORMED TOP Z-CLIP SECTION
SCALE: 1/4" = 1"

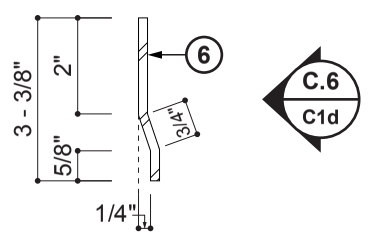

C.6 / C1d BRAKEFORMED BOTTOM Z-CLIP SECTION
SCALE: 1/4" = 1"

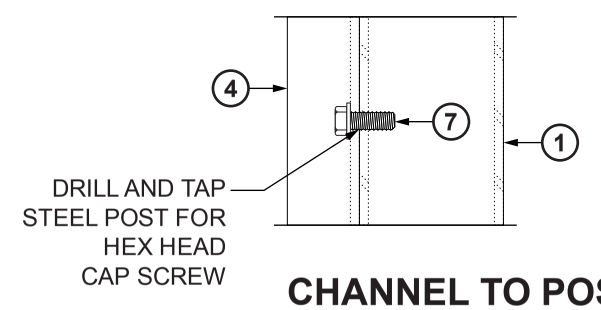

C.7 / C1d CHANNEL TO POST ATTACHMENT DETAIL
SCALE: 1/4" = 1"

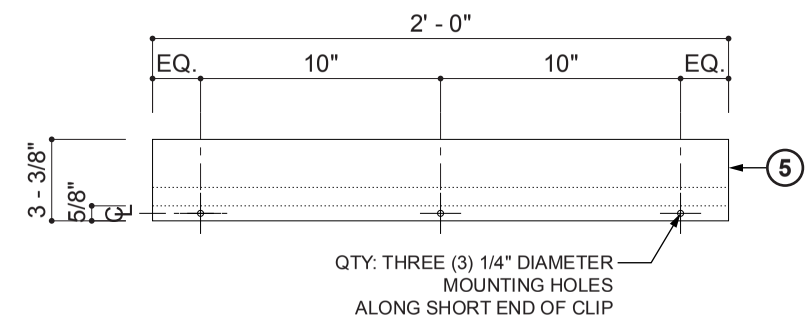

C.5a / C1d BRAKEFORMED TOP Z-CLIP DETAIL
SCALE: 1/8" = 1"

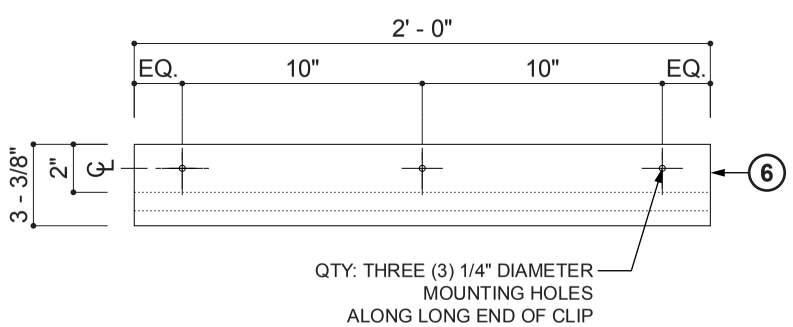

C.6a / C1d BRAKEFORMED BOTTOM Z-CLIP DETAIL
SCALE: 1/8" = 1"

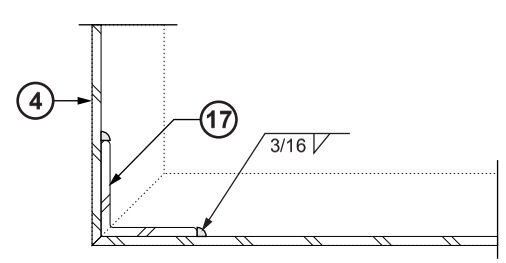

C.8 / C1d CORNER CLIP WELD DETAIL
SCALE: 1/4" = 1"

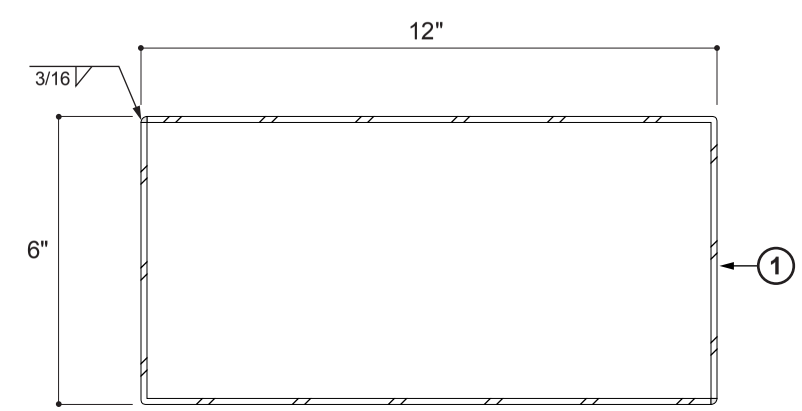

C.9 / C1d BRAKE FORMED COR-TEN POST
SCALE: 1/4" = 1"

Sales Order #:	1000049
Client:	National Park Service
Project:	Fort Pulaski National Monument
Project Manager:	Todd Turner
Drawn By:	Harry Kourniotis
Date:	12.12.05
Scale:	As Noted
Revision:	0
Signtype:	PI-2GA
Quantity:	1
Product Code:	Custom

Drawing Description:

CONSTRUCTION SPECIFICATIONS

Notes:

Bunting Graphics, Inc.
20 River Road
Verona, PA 15147-1159
Tel. 412-820-2200
FAX 412-820-4404
e-mail: mail@buntinggraphics.com

This drawing was prepared in accordance with information submitted. Changes to drawings may incur charges as stated in the price list. Signed approval of submitted drawing is required prior to manufacture. Approval of drawing acknowledges that it is correct and supersedes all previous sets of drawings and/or specifications related to this order.

Any changes, corrections or remakes of products manufactured in accordance to approved drawings will be at purchaser's expense. Confidential and proprietary information of Bunting Graphics, Inc. may not be used or reproduced without Bunting's prior written consent. No part of this drawing, design, arrangement or idea thereon shall be duplicated or used for any purpose without express written permission of Bunting Graphic.

Bunting is not responsible for furnishing Primary Electrical Service to sign locations.

Date _____ ☐ Approved
Name _____ ☐ Approved as Noted
Company _____ ☐ Revise and Resubmit

Drawing File:
X:/Nps/All Parks/F/FOPU/S.O./1000049/Drawings/FOPU-C1d/.ai

Production File:
N/A

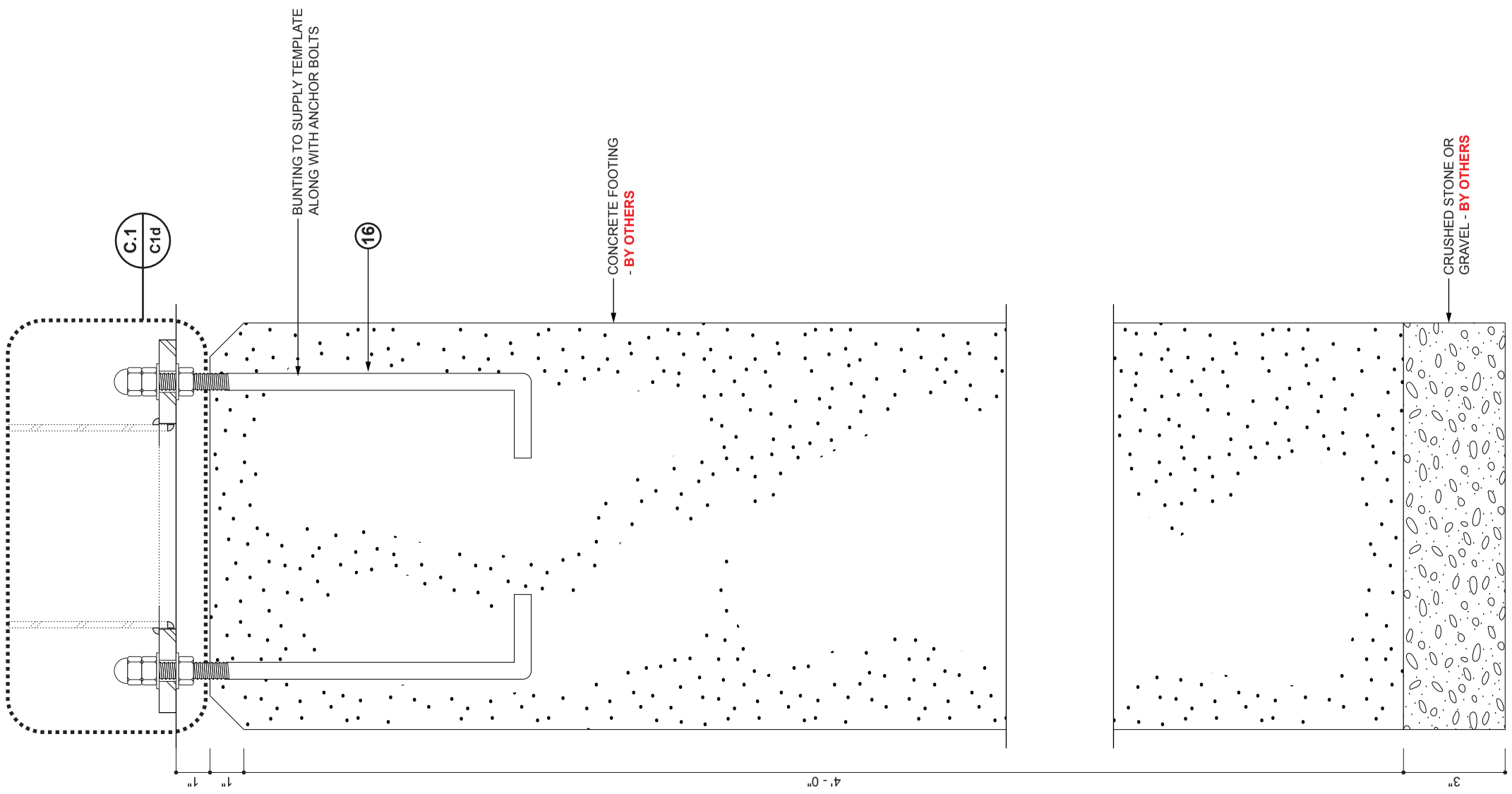

D.1 C1e

FOOTING ELEVATION DETAIL

SCALE: 1/4" = 1"

Sales Order #:	1000049
Client:	National Park Service
Project:	Fort Pulaski National Monument
Project Manager:	Todd Turner
Drawn By:	Harry Kourniotis
Date:	12.12.05
Scale:	As Noted
Revision:	0
Signtype:	PI-2GA
Quantity:	1
Product Code:	Custom

Drawing Description:

CONSTRUCTION SPECIFICATIONS

Notes:

Bunting Graphics, Inc.
20 River Road
Verona, PA 15147-1159
Tel. 412-820-2200
FAX 412-820-4404
e-mail: mail@buntinggraphics.com

This drawing was prepared in accordance with information submitted. Changes to drawings may incur charges as stated in the price list. Signed approval of submitted drawing is required prior to manufacture. Approval of drawing acknowledges that it is correct and supersedes all previous sets of drawings and/or specifications related to this order.

Any changes, corrections or remakes of products manufactured in accordance to approved drawings will be at purchaser's expense. Confidential and proprietary information of Bunting Graphics, Inc. may not be used or reproduced without Bunting's prior written consent. No part of this drawing, design, arrangement or idea thereon shall be duplicated or used for any purpose without express written permission of Bunting Graphic.

Bunting is not responsible for furnishing Primary Electrical Service to sign locations.

Date _____ ☐ Approved

Name _____ ☐ Approved as Noted

Company _____ ☐ Revise and Resubmit

Drawing File:
X:/Nps/All Parks/F/FOPU/S.O./1000049/Drawings/FOPU-C1e/.ai

Production File:
N/A

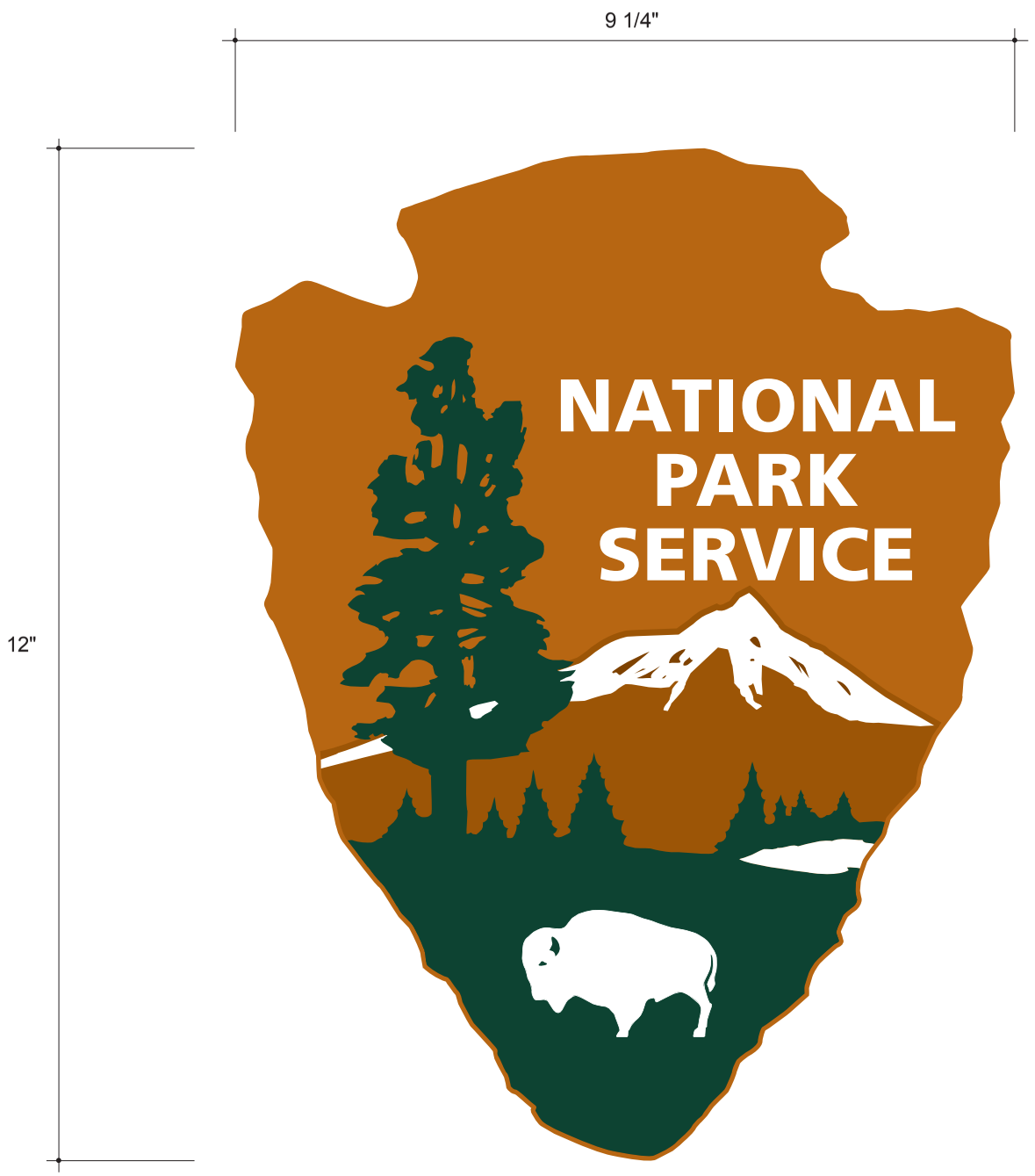

ARROWHEAD ELEVATION

SCALE: 1/2" = 1"

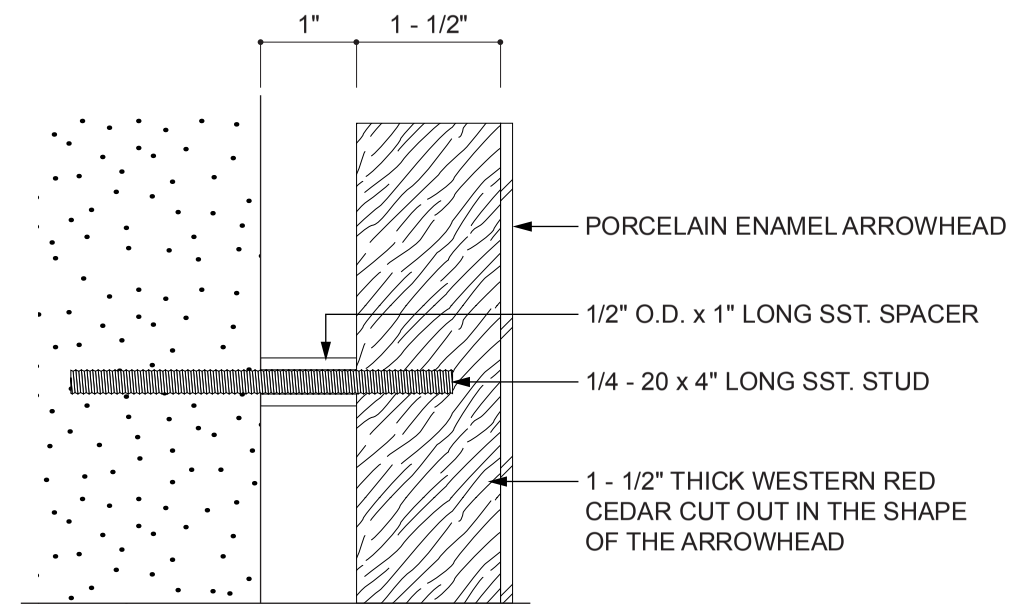

ARROWHEAD SECTION DETAIL

SCALE: 1/2" = 1"

Sales Order #:
1000049

Client:
NPS

Project
Fort Pulaski
National Monument

Project Manager:
Todd Turner

Drawn By:
NPS/Harry Kourniotis

Date:
12.12.05

Scale:
As Noted

Revision:
0

Signtype:
NPS Arrowhead Logo

Quantity:
3

Fabrication:

Product Code:
NPS Arrowhead Logo

Materials:
Porcelain Enamel
Western Red Cedar Backer

Size:
12"H x 9 1/4"W

Typestyle:
N/A

Graphics Method:
Porcelain Enamel

Graphics Color:
Standard NPS 3 Color Logo

Background Method:
Surface Painted

Background Color:
Wood Backer:
B.M. 5/E 1000 Northwood
Brown - Flat

Mounting Method:
By Others

Shipping/Installation:
Ship Only

BUNTING

Bunting Graphics, Inc.
20 River Road
Verona, PA 15147-1159
Tel. 412-820-2200
FAX 412-820-4404
e-mail: mail@buntinggraphics.com

This drawing was prepared in accordance with information submitted. Changes to drawings may incur charges as stated in the price list. Signed approval of submitted drawing is required prior to manufacture. Approval of drawing acknowledges that it is correct and supercedes all previous sets of drawings and/ or specifications related to this order.

Any changes, corrections or remakes of products manufactured in accordance to approved drawings will be at purchaser's expense. Confidential and proprietary information of Bunting Graphics, Inc. may not be used or reproduced without Bunting's prior written consent. No part of this drawing, design, arrangement or idea thereon shall be duplicated or used for any purpose without express written permission of Bunting Graphic.

Bunting is not responsible for furnishing Primary Electrical Service to sign locations.

Date _____ ☐ Approved
Name _____ ☐ Approved as Noted
Company _____ ☐ Revise and Resubmit

Drawing File:
X:/Nps/All Parks/F/FOPU/S.O./1000049/Drawings/FOPU-7/.ai

Production File:
Use Drawing File for Production

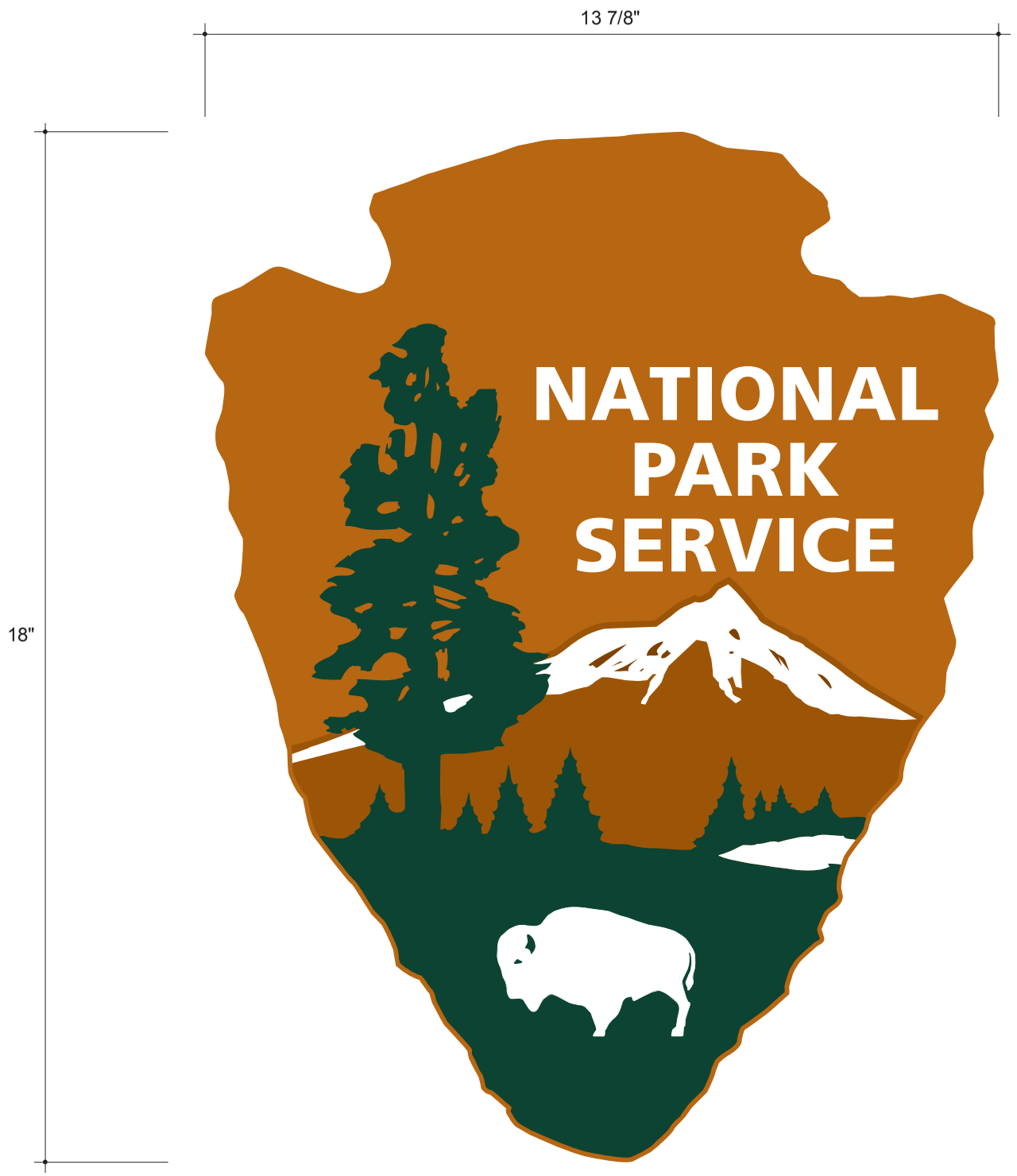

ARROWHEAD ELEVATION

SCALE: 3/8" = 1"

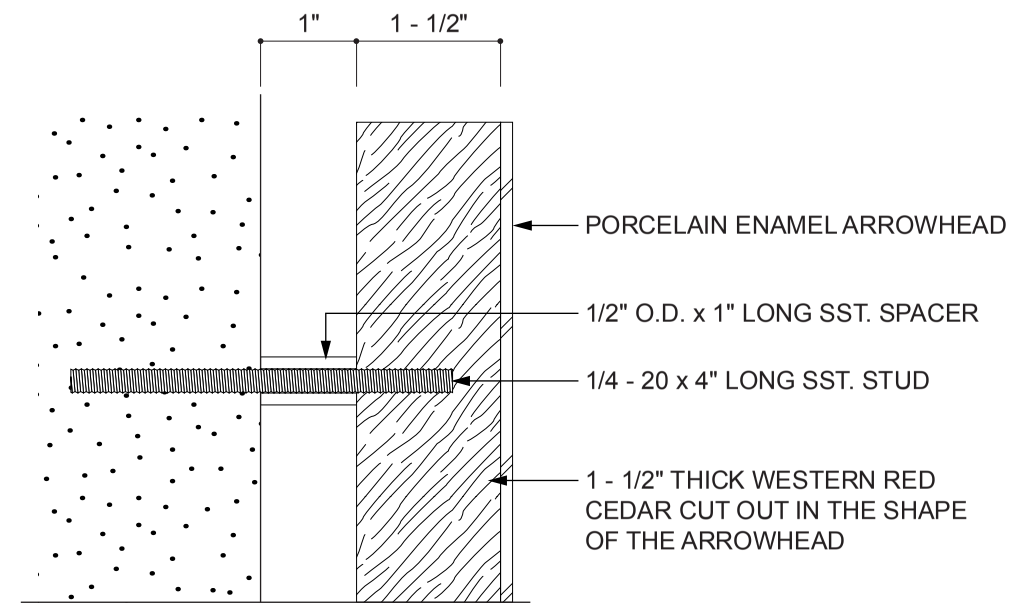

ARROWHEAD SECTION DETAIL

SCALE: 1/2" = 1"

Sales Order #:
1000049

Client:
NPS

Project
Fort Pulaski
National Monument

Project Manager:
Todd Turner

Drawn By:
NPS/Harry Kourniotis

Date:
12.12.05

Scale:
As Noted

Revision:
0

Signtype:
NPS Arrowhead Logo

Quantity:
5

Fabrication:

Product Code:
NPS Arrowhead Logo

Materials:
Porcelain Enamel
Western Red Cedar Backer

Size:
18"H x 13 7/8"W

Typestyle:
N/A

Graphics Method:
Porcelain Enamel

Graphics Color:
Standard NPS 3 Color Logo

Background Method:
Surface Painted

Background Color:
Wood Backer:
B.M. 5/E 1000 Northwood
Brown - Flat

Mounting Method:
By Others

Shipping/Installation:
Ship Only

BUNTING

Bunting Graphics, Inc.
20 River Road
Verona, PA 15147-1159
Tel. 412-820-2200
FAX 412-820-4404
e-mail: mail@buntinggraphics.com

This drawing was prepared in accordance with information submitted. Changes to drawings may incur charges as stated in the price list. Signed approval of submitted drawing is required prior to manufacture. Approval of drawing acknowledges that it is correct and supercedes all previous sets of drawings and/ or specifications related to this order.

Any changes, corrections or remakes of products manufactured in accordance to approved drawings will be at purchaser's expense. Confidential and proprietary information of Bunting Graphics, Inc. may not be used or reproduced without Bunting's prior written consent. No part of this drawing, design, arrangement or idea thereon shall be duplicated or used for any purpose without express written permission of Bunting Graphic.

Bunting is not responsible for furnishing Primary Electrical Service to sign locations.

Date _____ ☐ Approved
Name _____ ☐ Approved as Noted
Company _____ ☐ Revise and Resubmit

Drawing File:
X:/Nps/All Parks/F/FOPU/S.O./1000049/Drawings/FOPU-8/.ai

Production File:
Use Drawing File for Production