FOR REFERENCE USE ONLY

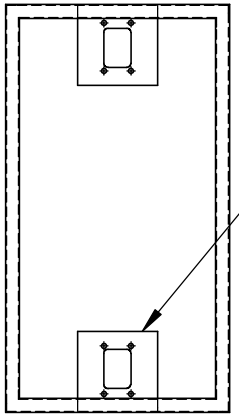

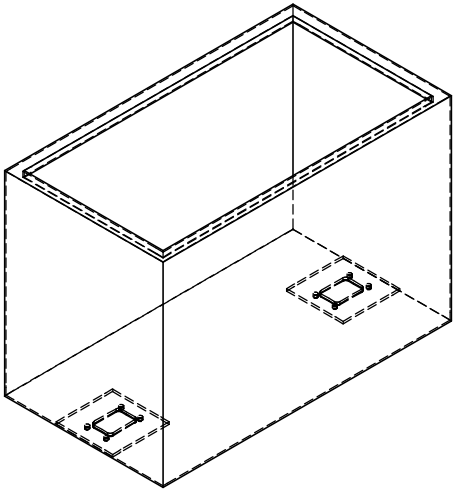

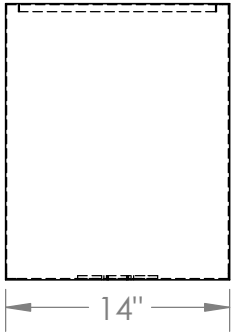

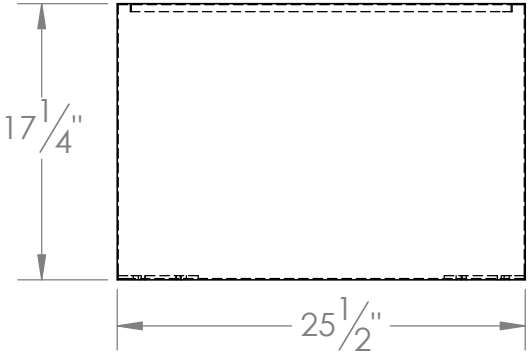

		UNLESS OTHERWISE SPECIFIED:		NAME	DATE
		DIMENSIONS ARE IN INCHES TOLERANCES: FRACTIONAL ±1/16" ANGULAR: BEND ±2 Deg X.XXX ±0.005	DRAWN		
			CHECKED		
			ENG APPR.		
			MFG APPR.		
		INTERPRET GEOMETRIC TOLERANCING PER:	Q.A.		
		MATERIAL 1/16" Steel Sheet 3/16" Steel Sheet	COMMENTS:		
NEXT ASSY	USED ON	FINISH			
APPLICATION		DO NOT SCALE DRAWING			

TITLE:

CFM Box

SIZE	DWG. NO.	REV
A	CFM 1	
SCALE: 1:12	WEIGHT:	SHEET 1 OF 3

FOR REFERENCE USE ONLY

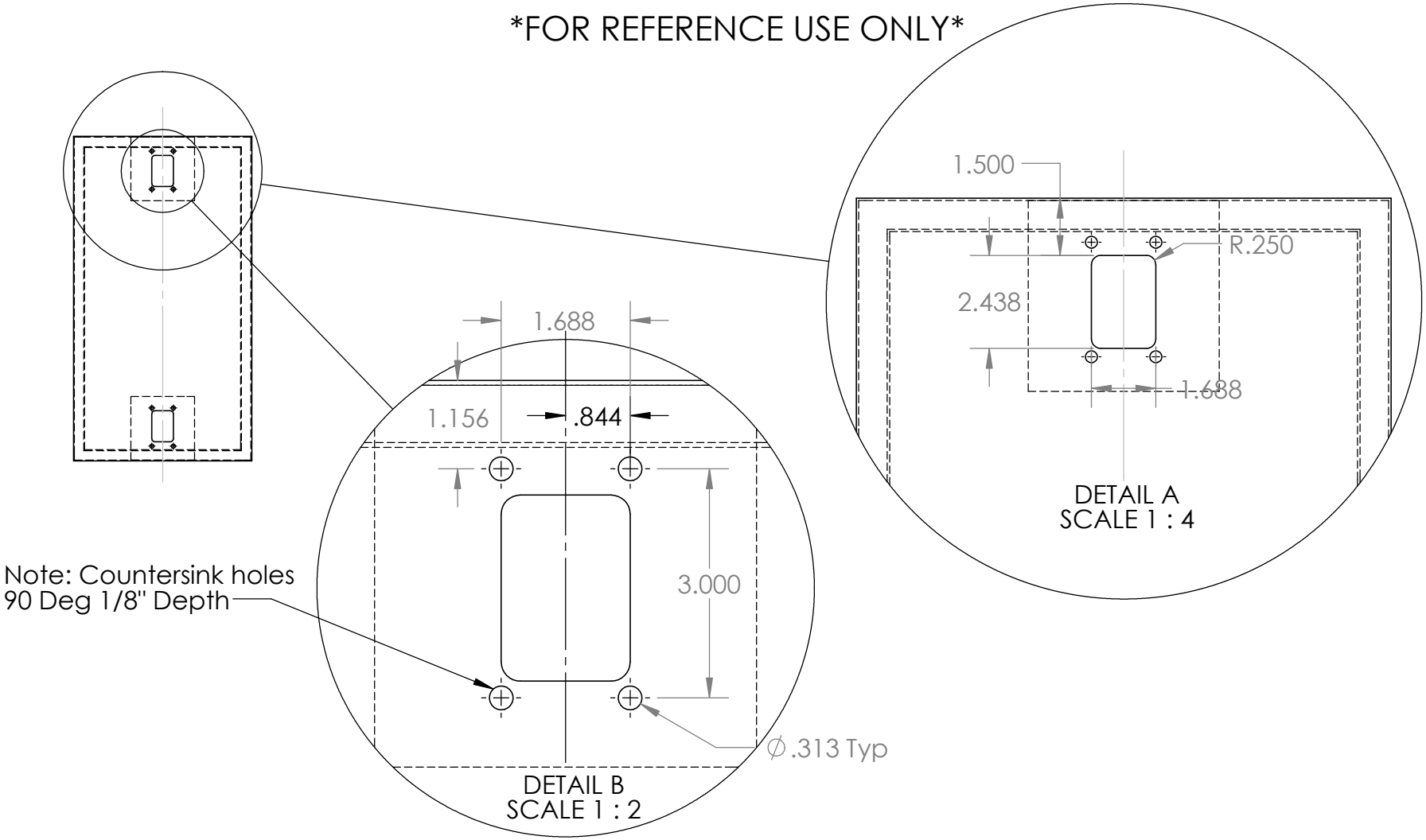

		UNLESS OTHERWISE SPECIFIED:		NAME	DATE
		DIMENSIONS ARE IN INCHES TOLERANCES: FRACTIONAL ±1/16" ANGULAR: BEND ±2 Deg X.XXX ±0.005	DRAWN		
			CHECKED		
			ENG APPR.		
			MFG APPR.		
		INTERPRET GEOMETRIC TOLERANCING PER:	Q.A.		
		MATERIAL 1/16" Steel Sheet 3/16" Steel Sheet	COMMENTS:		
NEXT ASSY	USED ON	FINISH			
APPLICATION		DO NOT SCALE DRAWING			

TITLE:

CFM Box

SIZE	DWG. NO.	REV
A	CFM 1	
SCALE: 1:12	WEIGHT:	SHEET 2 OF 3

FOR REFERENCE USE ONLY

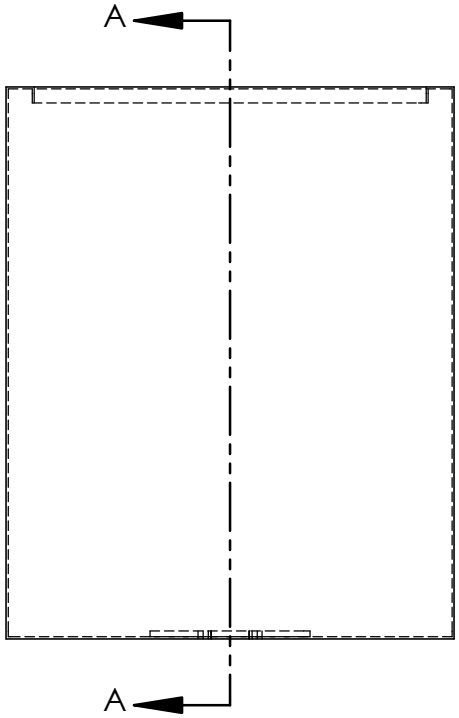

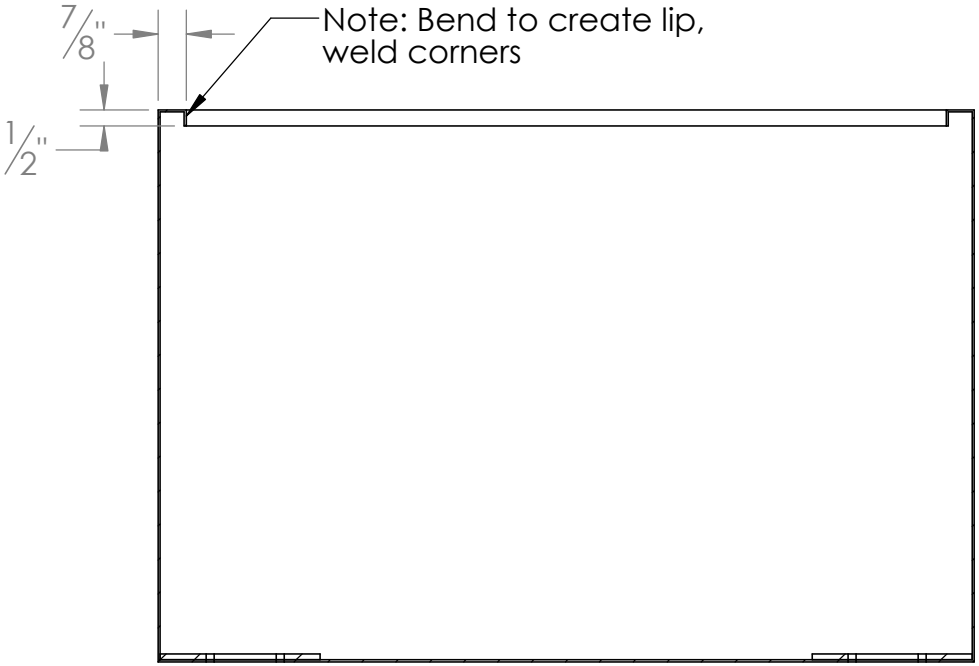

SECTION A-A

		UNLESS OTHERWISE SPECIFIED:		NAME	DATE
		DIMENSIONS ARE IN INCHES TOLERANCES: FRACTIONAL ±1/16" ANGULAR: BEND ±2 Deg X.XXX ±0.005	DRAWN		
			CHECKED		
			ENG APPR.		
			MFG APPR.		
		INTERPRET GEOMETRIC TOLERANCING PER:	Q.A.		
		MATERIAL 1/16" Steel Sheet 3/16" Steel Sheet	COMMENTS:		
NEXT ASSY	USED ON	FINISH			
APPLICATION		DO NOT SCALE DRAWING			

TITLE:

CFM Box

SIZE	DWG. NO.	REV
A	CFM 1	
SCALE: 1:6	WEIGHT:	SHEET 3 OF 3

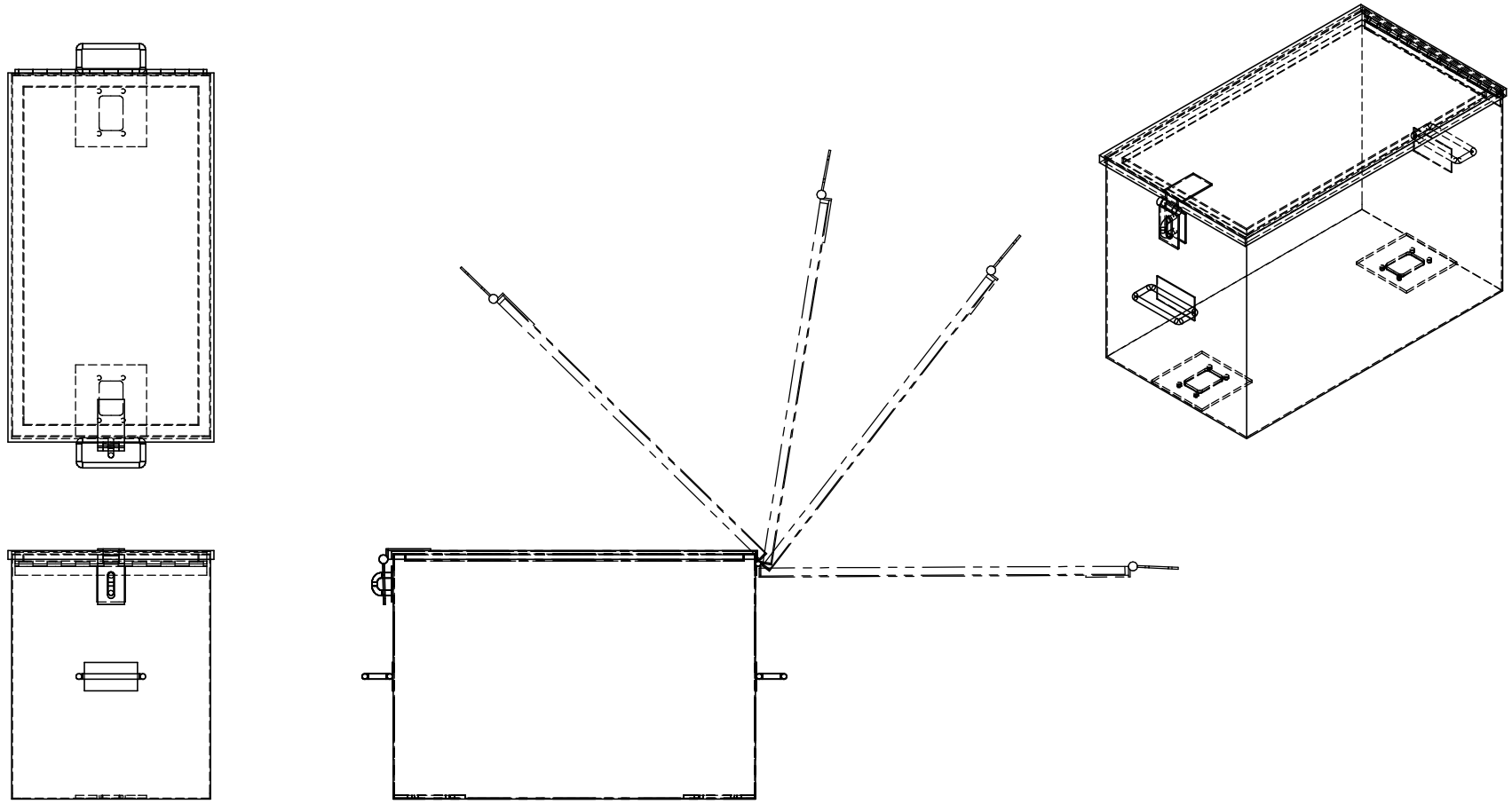

		UNLESS OTHERWISE SPECIFIED:		NAME	DATE
		DIMENSIONS ARE IN INCHES TOLERANCES: FRACTIONAL ±1/16" ANGULAR: BEND ±2 Deg X.XXX ±0.005	DRAWN		
			CHECKED		
			ENG APPR.		
			MFG APPR.		
		INTERPRET GEOMETRIC TOLERANCING PER:	Q.A.		
		MATERIAL 1/16" Sheet Steel 3/16' Sheet Steel	COMMENTS: Latch, handles, and hinge welded to box		
NEXT ASSY	USED ON	FINISH			
APPLICATION		DO NOT SCALE DRAWING			

TITLE:

CFM Box Full Unit

SIZE	DWG. NO.	REV
A	CFM 3	
SCALE: 1:12	WEIGHT:	SHEET 1 OF 3

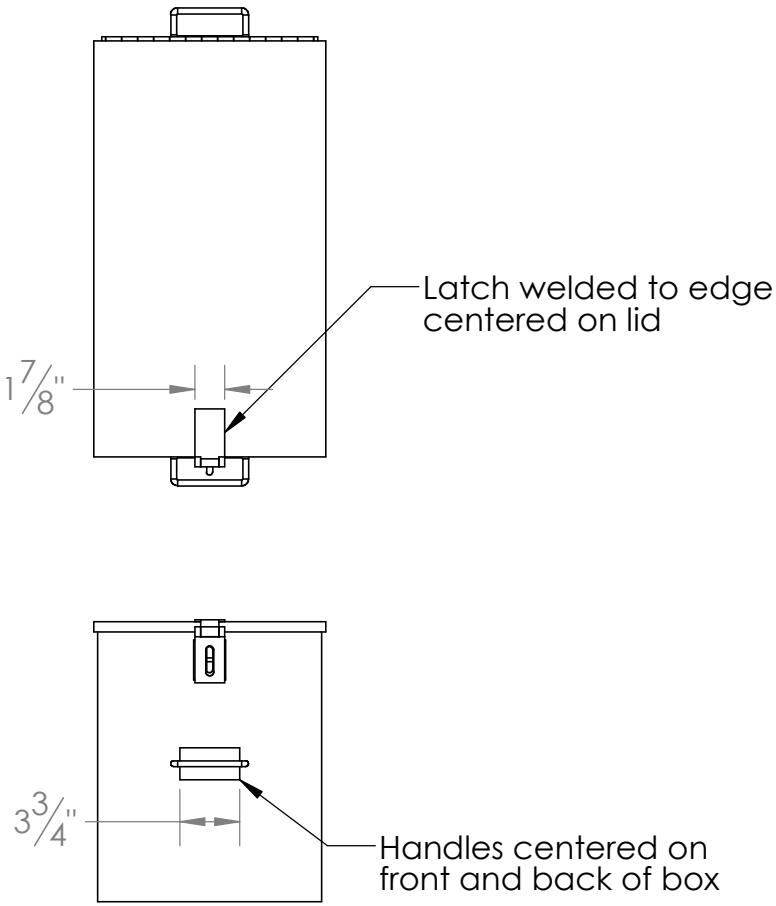

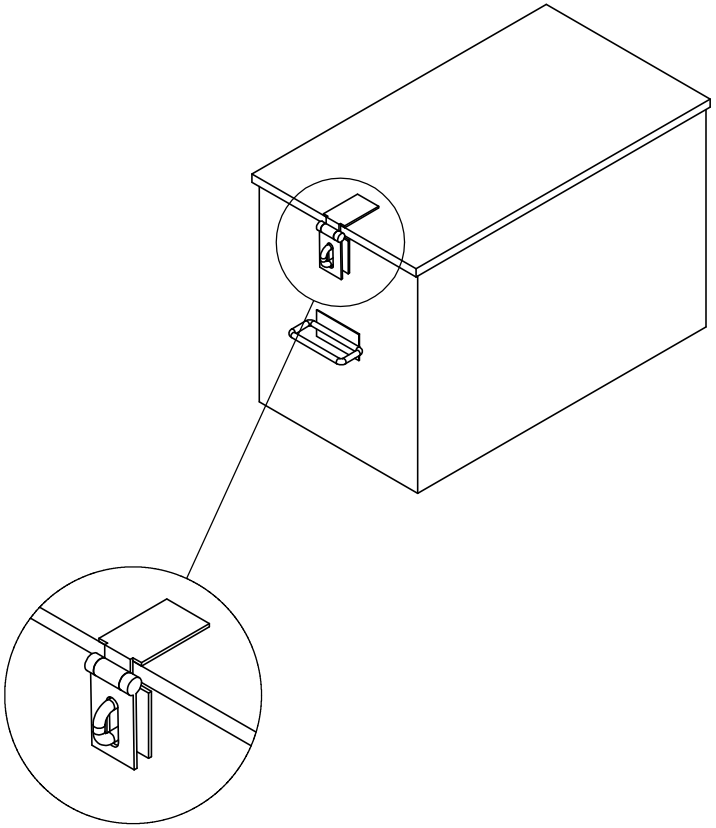

DETAIL A
SCALE 1 : 6

		UNLESS OTHERWISE SPECIFIED:		NAME	DATE
		DIMENSIONS ARE IN INCHES TOLERANCES: FRACTIONAL ±1/16" ANGULAR: BEND ±2 Deg X.XXX ±0.005	DRAWN		
			CHECKED		
			ENG APPR.		
			MFG APPR.		
		INTERPRET GEOMETRIC TOLERANCING PER:	Q.A.		
		MATERIAL 1/16" Sheet Steel 3/16' Sheet Steel	COMMENTS:		
NEXT ASSY	USED ON	FINISH			
APPLICATION		DO NOT SCALE DRAWING			

TITLE:
CFM Box Full Unit

SIZE	DWG. NO.	REV
A	CFM 3	
SCALE: 1:12	WEIGHT:	SHEET 2 OF 3

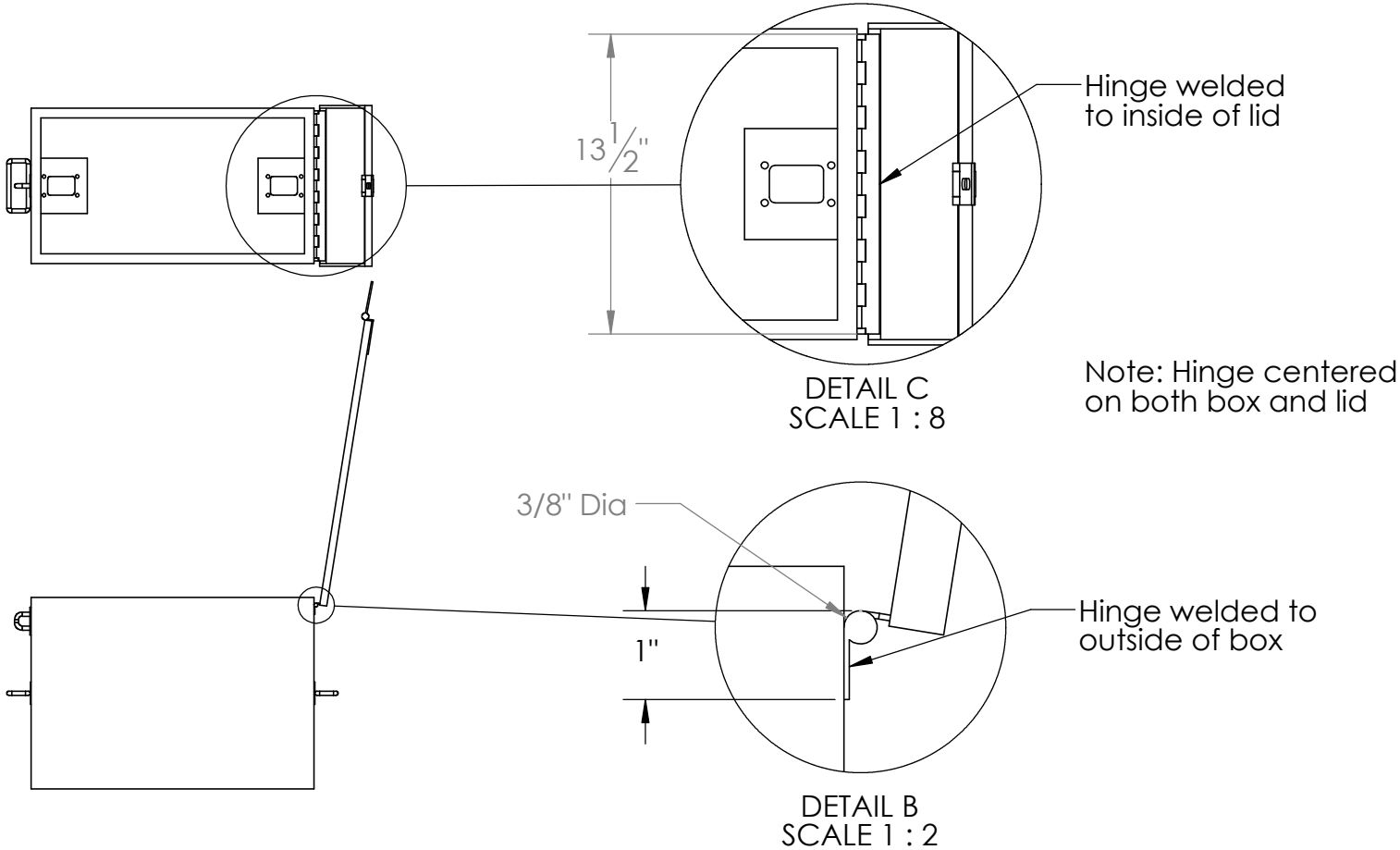

		UNLESS OTHERWISE SPECIFIED:		NAME	DATE
		DIMENSIONS ARE IN INCHES TOLERANCES: FRACTIONAL ±1/16" ANGULAR: BEND ±2 Deg X.XXX ±0.005	DRAWN		
			CHECKED		
			ENG APPR.		
			MFG APPR.		
		INTERPRET GEOMETRIC TOLERANCING PER:	Q.A.		
		MATERIAL 1/16" Sheet Steel 3/16' Sheet Steel	COMMENTS:		
NEXT ASSY	USED ON	FINISH			
APPLICATION		DO NOT SCALE DRAWING			

TITLE:

CFM Box Full Unit

SIZE	DWG. NO.	REV
A	CFM 3	
SCALE: 1:16	WEIGHT:	SHEET 3 OF 3