HOPE ON THE HILL

Design Drawings - Contract Documents (100)

Rev 1 - July 2025

BUREAU OF RECLAMATION

ALDRICHPEARS ASSOCIATES

LGA ARCHITECTURE

LIST OF DRAWINGS

NO.	TITLE	DWG. TYPE
X0.01	List of Drawings	Schedule
X0.05	Materials & Finishes	Schedule
X0.50	Site Plan and List of Interperetive Signage	Plan and Schedule
X1.00	Sign Type Heirarchy	Details
X1.05	Typical Footing Details	Details
X1.10	A - Typical Welcome Kiosk	Details
X1.20	B - Typical Story Panel	Details
X1.30	C1 - Special Story - Hoover Dam	Details
X1.40	C2 - Special Story - The Lawn's Evolution	Details
X1.50	C3 - Map - Boulder City	Details
X1.60	D - Typical Teaser	Details
X1.70	E - Typical Plant ID	Details

CALLOUT LEGEND

CATEGORY	USE EXAMPLES
Annotation	Faux rock work Floorboards to be loosley fit to allow lighting effect to show through.
EXHIBIT CODE Refer to the List of Interpretive Signage, Sheet: X0.50	**2.1.1** **4.3.4**
MATERIAL CODE Refer to the Material & Finish Schedule, Sheet: X0.05	WD-04 SS-01
GRAPHIC CODE Refer to the Text & Graphics Document	2.2.2-1 4.1.1-3 — 4.1.1-8

REV	DATE:	DESCRIPTION OF REVISION

CLIENT

— BUREAU OF —
RECLAMATION

LGA
ARCHITECTURE

PRINCIPLE EXHIBIT DESIGNER

ALDRICHPEARS ASSOCIATES

AldrichPears Associates
302 - 1930 Pandora Street,
Vancouver, BC, Canada
V5L 057

Tel: + 1 (604) 669-7044
Web: www.aldrichpears.com

Written dimensions on drawings shall have authority over scaled. Contractors and manufacturers shall verify and be responsible for all conditions on the job site. Any variation from drawings are to be reported to the designer/studio responsible for this drawing prior to commencing work. The designer responsible shall approve all production and detail drawings relating to this drawing. The specifications here relate solely to matters of appearance. This studio is not qualified to determine matters of safety, structural appropriateness or compliance with building regulations or compliance with various government codes. Any drawing that appears to specify construction methods should be considered as schematic only.

The ideas laid down within this drawing shall remain the intellectual property of the designer/studio and shall not be transferred to any other party without the written consent of the designer/studio.

This drawing is not to be reproduced without written permission. Drawings are susceptible to alteration, neither the designer, the studio nor any of its affiliates shall be liable for this drawing if altered, changed or falsified.

NO. **0490**

PROJECT
HOPE ON THE HILL

PROJECT STAGE
CONTRACT DOCUMENTS

GALLERY NAME
EXTERIOR INTERPRETIVE SIGNS

DRAWING TITLE
LIST OF DRAWINGS

DRAWING NUMBER **X0.01** REV **01**

ISSUE DATE	DRAWN BY	CHECKED BY	FORMAT
30 July 2025	**sP**	**MB**	**ANSI D**

Plot Date: Jul 22, 2025 0490 Hope on the Hill_CD v2024.vwx

MATERIALS AND FINISHES

CODE	CATEGORY	DESCRIPTION/MAKE	COLOR	FINISH	NOTES
ML-01	MILD STEEL	Custom Fabricated Components		Painted or Powder-coated	
ML-02	WEATHERING STEEL	Custom Fabricated Components / Corten or eqiv.		Natural Patina	
ML-03	BRONZE (CAST)	Solid or Cold-cast	Natural		
CO-01	CONCRETE	Cast Concrete	Natural	Smooth	
ST-01	STONE TILE	Stone Tile - etched or engraved	TBD	TBD	
PC-01	POWDER COAT	Powder-coated Metal	RAL 6013 'Reed Green'	Satin	
PC-02	POWDER COAT	Powder-coated Metal	RAL 5015 'Sky Blue'	Satin	
GS-01	GRAPHIC SUBSTRATE	Direct Embed Powder Coated Graphics (DEPG)(on 1/8" metal panel	Varies	Satin or Matte - Exterior Use	

METAL

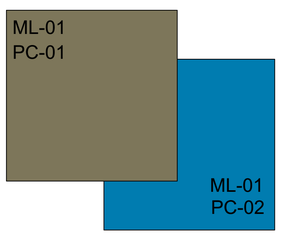

Mild Steel
- Powdercoated finish

Corten Steel
- Natural Patina
- Cutout patterns & text

Water Can

Miner's Hard Hat

Cast Bronze Tactile Objects
- custom molded
- solid or 'cold cast' bronze
- objects to be period specific to time of hoover dam construction

Work Gloves

CONCRETE

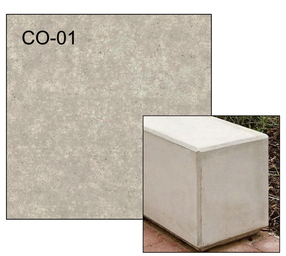

Cast Concrete Block
- smooth finish

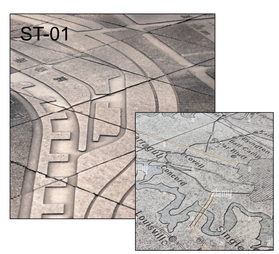

Stone Paving Tiles
w. etched or engraved graphics

GRAPHIC PANELS

Direct Embed Powder Coated Graphics (DEPG)
- Powder coated metal panels w. embeded graphics
- Extreme temperature resistant
- Vandal / Graffiti resistant

REV	DATE:	DESCRIPTION OF REVISION

CLIENT

BUREAU OF RECLAMATION

LGA ARCHITECTURE

PRINCIPLE EXHIBIT DESIGNER

ALDRICHPEARS ASSOCIATES

AldrichPears Associates
302 - 1930 Pandora Street,
Vancouver, BC, Canada
V5L 057
Tel: + 1 (604) 669-7044
Web: www.aldrichpears.com

Written dimensions on drawings shall have authority over scaled. Contractors and manufacturers shall verify and be responsible for all conditions on the job site. Any variation from drawings are to be reported to the designer/studio responsible for this drawing prior to commencing work. The designer responsible shall approve all production and detail drawings relating to this drawing. The specifications here relate solely to matters of appearance. This studio is not qualified to determine matters of safety, structural appropriateness or compliance with building regulations or compliance with various government codes. Any drawing that appears to specify construction methods should be considered as schematic only.

The ideas laid down within this drawing shall remain the intellectual property of the designer/studio and shall not be transferred to any other party without the written consent of the designer/studio.

This drawing is not to be reproduced without written permission. Drawings are susceptible to alteration, neither the designer, the studio nor any of its affiliates shall be liable for this drawing if altered, changed or falsified.

NO. **0490**

PROJECT
HOPE ON THE HILL

PROJECT STAGE
CONTRACT DOCUMENTS

GALLERY NAME
EXTERIOR INTERPRETIVE SIGNS

DRAWING TITLE
MATERIALS & FINISHES

DRAWING NUMBER **X0.05** REV **01**

ISSUE DATE	DRAWN BY	CHECKED BY	FORMAT
30 July 2025	**sP**	**MB**	**ANSI D**

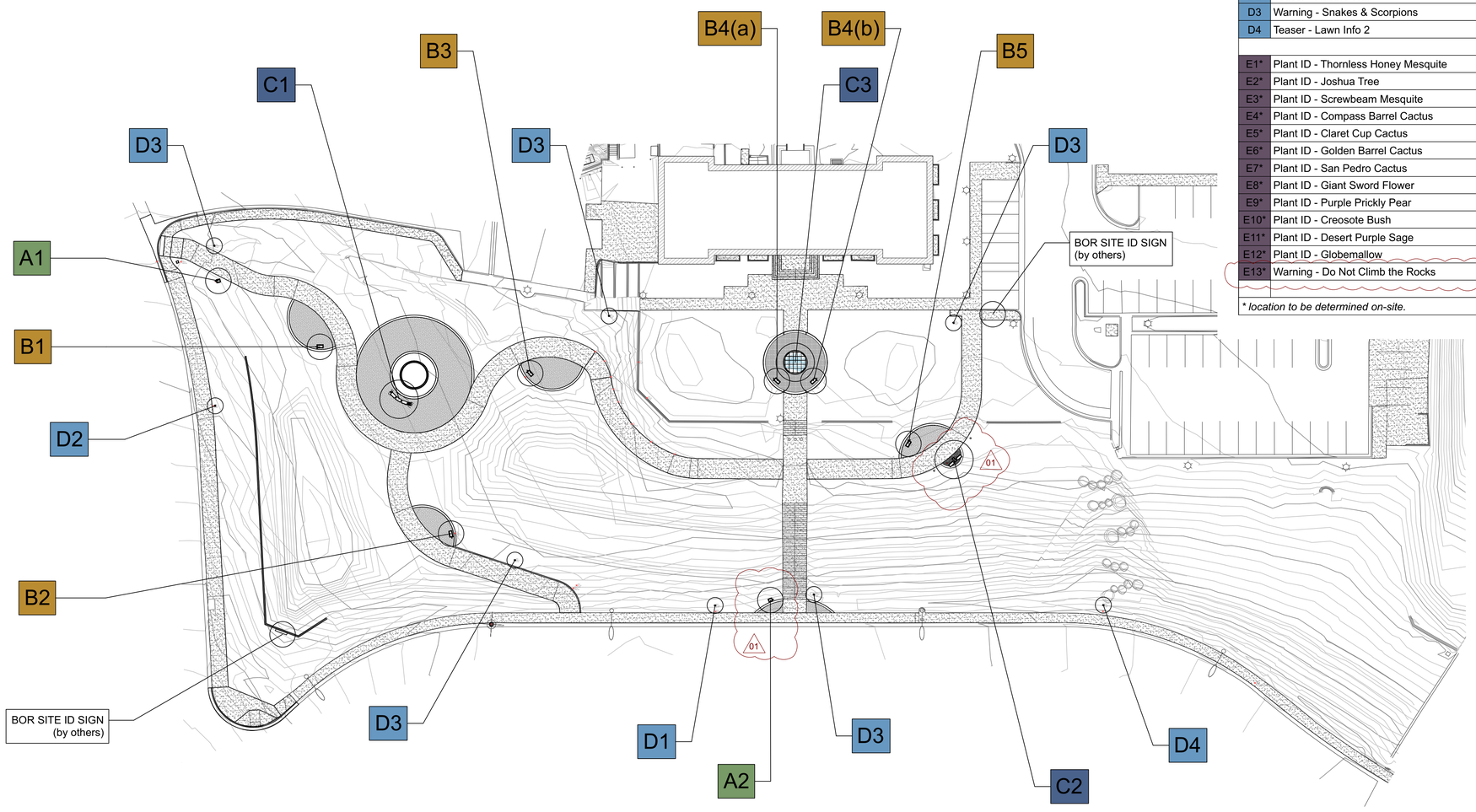

1 SITE PLAN - SIGNAGE DISTRIBUTION
Scale: 1/32" = 1'-0"

LIST OF INTERPRETIVE SIGNAGE

CODE	DESCRIPTION	SIGN TYPE	QTY	SHEET/DWG
A1	Welcome & Orientation 1	A	1	X1.10
A2	Welcome & Orientation 2	A	1	X1.10
B1	Story Panel - BOR Overview/Reclamation	B	1	X1.20
B2	Story Panel - Sustainable Landscaping	B	1	X1.20
B3	Story Panel - Local Water Use	B	1	X1.20
B4(a)	Story Panel - Boulder City Story	B	1	X1.20
B4(b)	Story Panel - City Plans	B	1	X1.20
B5	Story Panel - BOR Admin Building	B	1	X1.20
C1	Special Story - Hoover Dam	C1	1	X1.30
C2	Special Story - The Lawn's Evolution	C2	1	X1.40
C3	Map - Boulder City	C3	1	X1.50
D1	Teaser - Lawn Info 1	D	1	X1.60
D2	Teaser - Rubble Wall	D	1	X1.60
D3	Warning - Snakes & Scorpions	D	5	X1.60
D4	Teaser - Lawn Info 2	D	1	X1.60
E1*	Plant ID - Thornless Honey Mesquite	E	1	X1.70
E2*	Plant ID - Joshua Tree	E	1	X1.70
E3*	Plant ID - Screwbeam Mesquite	E	1	X1.70
E4*	Plant ID - Compass Barrel Cactus	E	1	X1.70
E5*	Plant ID - Claret Cup Cactus	E	1	X1.70
E6*	Plant ID - Golden Barrel Cactus	E	1	X1.70
E7*	Plant ID - San Pedro Cactus	E	1	X1.70
E8*	Plant ID - Giant Sword Flower	E	1	X1.70
E9*	Plant ID - Purple Prickly Pear	E	1	X1.70
E10*	Plant ID - Creosote Bush	E	1	X1.70
E11*	Plant ID - Desert Purple Sage	E	1	X1.70
E12*	Plant ID - Globemallow	E	1	X1.70
E13*	Warning - Do Not Climb the Rocks	E	2	X1.70

** location to be determined on-site.*

REV	DATE:	DESCRIPTION OF REVISION
01	30 July 2025	E13 Warning signs added; A2 & C2 location adjusted

CLIENT

BUREAU OF RECLAMATION

LGA ARCHITECTURE

PRINCIPLE EXHIBIT DESIGNER

ALDRICHPEARS ASSOCIATES

AldrichPears Associates
302 - 1930 Pandora Street,
Vancouver, BC, Canada
V5L 057
Tel: + 1 (604) 669-7044
Web: www.aldrichpears.com

Written dimensions on drawings shall have authority over scaled. Contractors and manufacturers shall verify and be responsible for all conditions on the job site. Any variation from drawings are to be reported to the designer/studio responsible for this drawing prior to commencing work. The designer responsible shall approve all production and detail drawings relating to this drawing. The specifications here relate solely to matters of appearance. This studio is not qualified to determine matters of safety, structural appropriateness or compliance with building regulations or compliance with various government codes. Any drawing that appears to specify construction methods should be considered as schematic only.

The ideas laid down within this drawing shall remain the intellectual property of the designer/studio and shall not be transferred to any other party without the written consent of the designer/studio.

This drawing is not to be reproduced without written permission. Drawings are susceptible to alteration, neither the designer, the studio nor any of its affiliates shall be liable for this drawing if altered, changed or falsified.

NO. **0490**

PROJECT
HOPE ON THE HILL

PROJECT STAGE
CONTRACT DOCUMENTS

GALLERY NAME
EXTERIOR INTERPRETIVE SIGNS

DRAWING TITLE
SITE PLAN - SIGNAGE DISTRIBUTION

DRAWING NUMBER **X0.50** REV **01**

ISSUE DATE	DRAWN BY	CHECKED BY	FORMAT
30 July 2025	sP	MB	ANSI D

Plot Date: Jul 22, 2025 0490 Hope on the Hill_CD v2024.rvex

TYPICAL SIGN TYPES

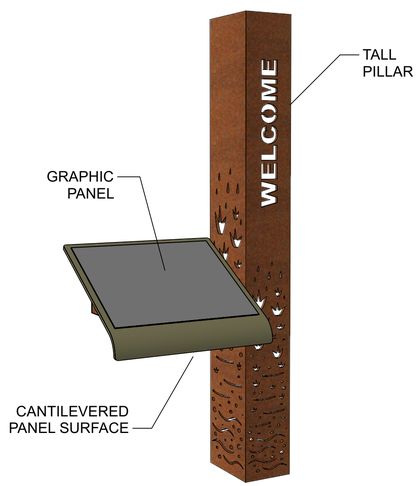

A - WELCOME KIOSK

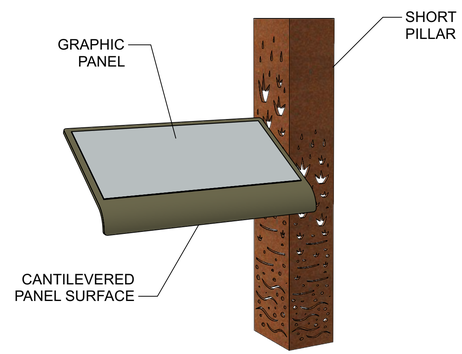

B - STORY PANEL

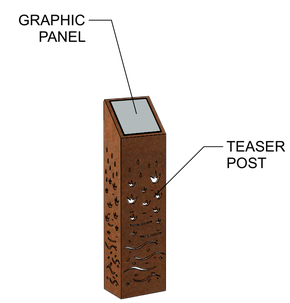

D - TEASER

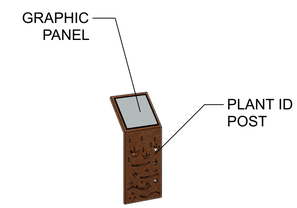

E - PLANT ID

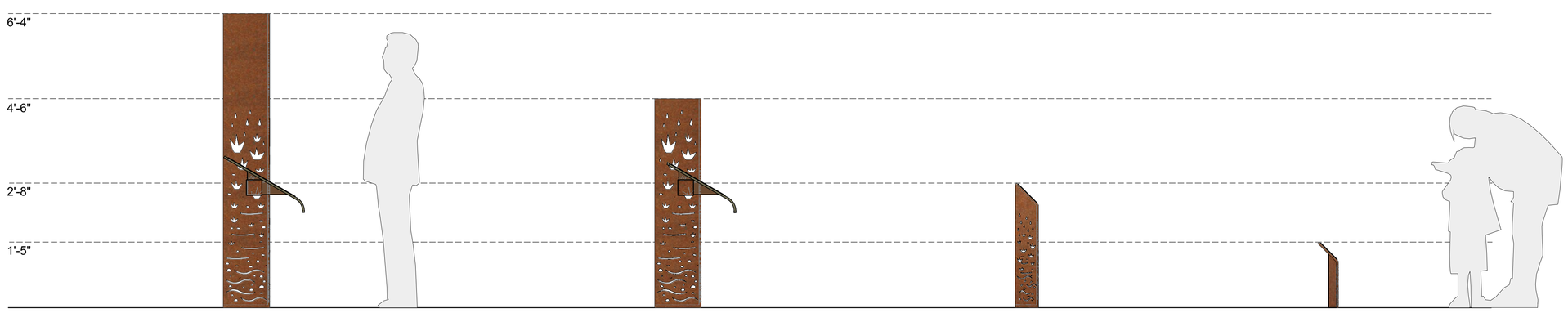

REV	DATE:	DESCRIPTION OF REVISION

CLIENT

BUREAU OF RECLAMATION

LGA ARCHITECTURE

PRINCIPLE EXHIBIT DESIGNER

ALDRICHPEARS ASSOCIATES

AldrichPears Associates
302 - 1930 Pandora Street,
Vancouver, BC, Canada
V5L 057

Tel: + 1 (604) 669-7044
Web: www.aldrichpears.com

Written dimensions on drawings shall have authority over scaled. Contractors and manufacturers shall verify and be responsible for all conditions on the job site. Any variation from drawings are to be reported to the designer/studio responsible for this drawing prior to commencing work. The designer responsible shall approve all production and detail drawings relating to this drawing. The specifications here relate solely to matters of appearance. This studio is not qualified to determine matters of safety, structural appropriateness or compliance with building regulations or compliance with various government codes. Any drawing that appears to specify construction methods should be considered as schematic only.

The ideas laid down within this drawing shall remain the intellectual property of the designer/studio and shall not be transferred to any other party without the written consent of the designer/studio.

This drawing is not to be reproduced without written permission. Drawings are susceptible to alteration, neither the designer, the studio nor any of its affiliates shall be liable for this drawing if altered, changed or falsified.

NO. **0490**

PROJECT
HOPE ON THE HILL

PROJECT STAGE
CONTRACT DOCUMENTS

GALLERY NAME
EXTERIOR INTERPRETIVE SIGNS

DRAWING TITLE
SIGN TYPE HIERARCHY

DRAWING NUMBER **X1.00** REV **01**

ISSUE DATE	DRAWN BY	CHECKED BY	FORMAT
30 July 2025	sP	MB	ANSI D

Plot Date: Jul 22, 2025 0490 Hope on the Hill_CD v2024.rvx

TYPICAL FOOTING DETAILS

*****NOT FOR CONSTRUCTION *****

Footing drawings provided here are intented for general reference and discussion only. Contractor to be responsible for engineering and construction of all sign footings.

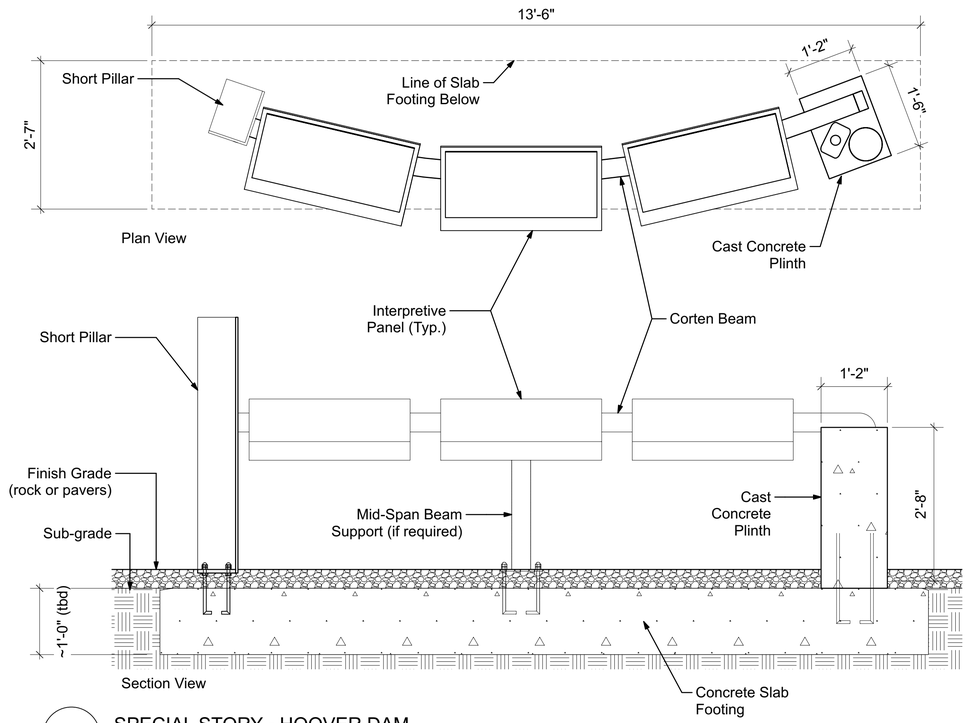

C1 SPECIAL STORY - HOOVER DAM
Scale: 3/4" = 1'-0"

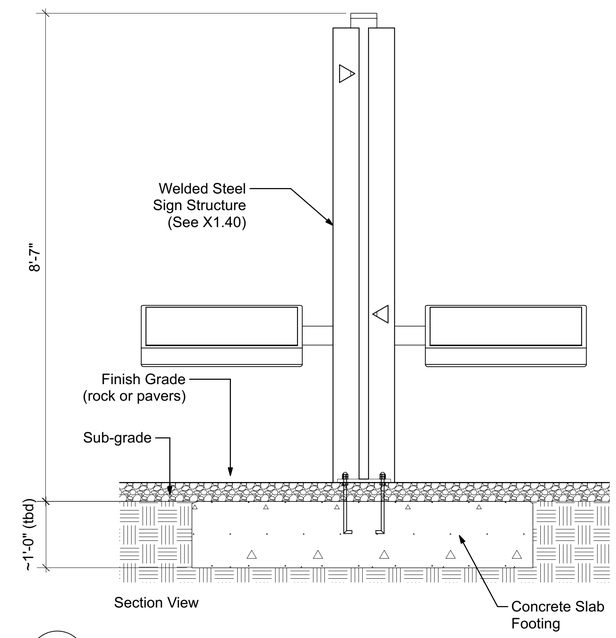

C2 SPECIAL STORY - LAWN EVOLUTION
Scale: 3/4" = 1'-0"

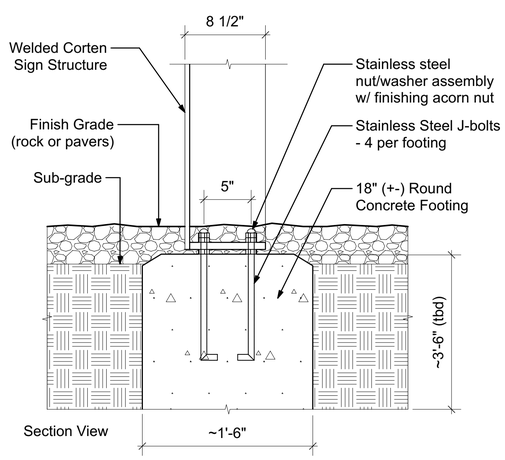

A/B WELCOME KIOSK / STORY PANEL
Scale: 1 1/2" = 1'-0"

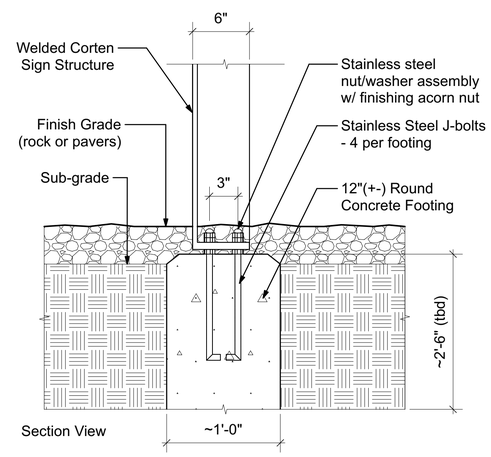

D TEASER
Scale: 1 1/2" = 1'-0"

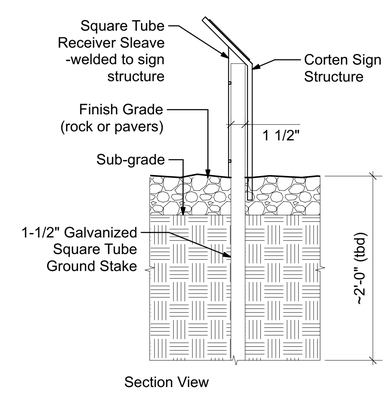

E PLANT ID
Scale: 1 1/2" = 1'-0"

REV	DATE:	DESCRIPTION OF REVISION
01	2024 02 __	Updated for Architectural coordination

CLIENT

BUREAU OF RECLAMATION

LGA ARCHITECTURE

PRINCIPLE EXHIBIT DESIGNER

ALDRICHPEARS ASSOCIATES

AldrichPears Associates
302 - 1930 Pandora Street,
Vancouver, BC, Canada
V5L 057
Tel: + 1 (604) 669-7044
Web: www.aldrichpears.com

Written dimensions on drawings shall have authority over scaled. Contractors and manufacturers shall verify and be responsible for all conditions on the job site. Any variation from drawings are to be reported to the designer/studio responsible for this drawing prior to commencing work. The designer responsible shall approve all production and detail drawings relating to this drawing. The specifications here relate solely to matters of appearance. This studio is not qualified to determine matters of safety, structural appropriateness or compliance with building regulations or compliance with various government codes. Any drawing that appears to specify construction methods should be considered as schematic only.

The ideas laid down within this drawing shall remain the intellectual property of the designer/studio and shall not be transferred to any other party without the written consent of the designer/studio.

This drawing is not to be reproduced without written permission. Drawings are susceptible to alteration, neither the designer, the studio nor any of its affiliates shall be liable for this drawing if altered, changed or falsified.

NO. **0490**

PROJECT
HOPE ON THE HILL

PROJECT STAGE
CONTRACT DOCUMENTS

GALLERY NAME
EXTERIOR INTERPRETIVE SIGNS

DRAWING TITLE
TYPICAL FOOTINGS DETAILS

DRAWING NUMBER **X1.05** REV **01**

ISSUE DATE	DRAWN BY	CHECKED BY	FORMAT
30 July 2025	sP	MB	ANSI D

Plot Date: Jul 22, 2025 0490 Hope on the Hill_CD v2024.vwx

A - WELCOME KIOSK
A1 / A2

**See Text & Graphics document for complete list of exhibit graphics and sign quantities.*

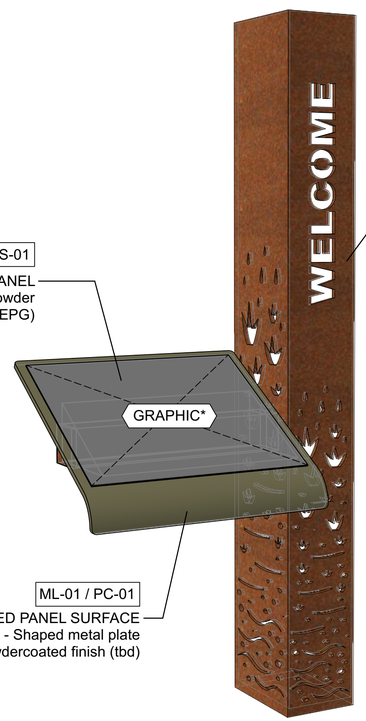

1 PERSPECITVE VIEW
Scale: N/A

ML-02
TALL PILLAR
- Welded Corten Steel
- Waterjet cutout patterning (see graphics)

*** CUTOUT TEXT & PATTERNS SHOWN ARE FOR REFERENCE / PLACEMENT ONLY***
- see graphics document for details

SEE TYPICAL FOOTING DRAWINGS FOR GENERAL FOOTING DETAILS.

NOTE: Contractor to be responsible for engineering and construction of sign footings.

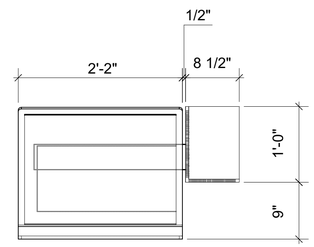

2 PLAN VIEW
Scale: 1" = 1'-0"

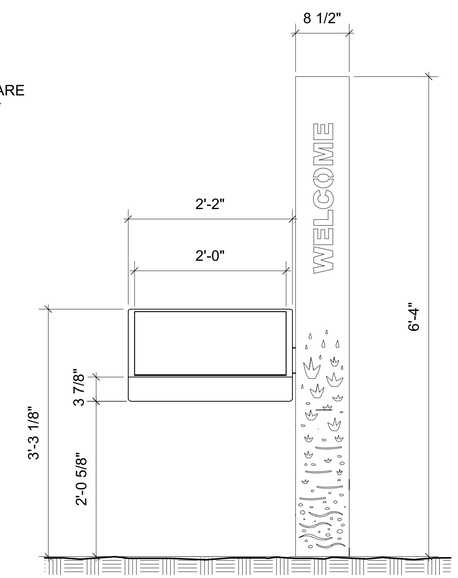

3 FRONT VIEW
Scale: 1" = 1'-0"

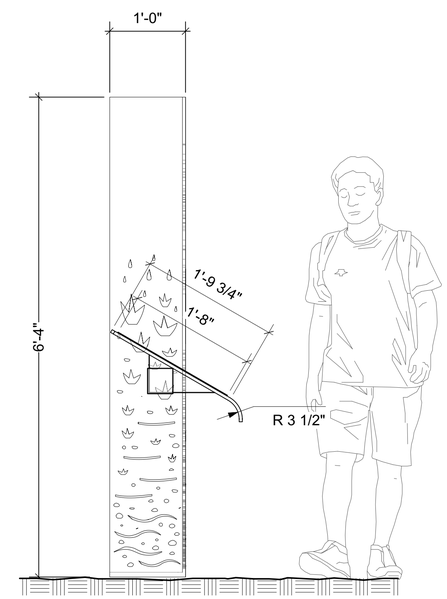

4 SIDE VIEW
Scale: 1" = 1'-0"

REV	DATE:	DESCRIPTION OF REVISION

CLIENT

BUREAU OF RECLAMATION

LGA ARCHITECTURE

PRINCIPLE EXHIBIT DESIGNER

ALDRICHPEARS ASSOCIATES
AldrichPears Associates
302 - 1930 Pandora Street,
Vancouver, BC, Canada
V5L 057
Tel: + 1 (604) 669-7044
Web: www.aldrichpears.com

Written dimensions on drawings shall have authority over scaled. Contractors and manufacturers shall verify and be responsible for all conditions on the job site. Any variation from drawings are to be reported to the designer/studio responsible for this drawing prior to commencing work. The designer responsible shall approve all production and detail drawings relating to this drawing. The specifications here relate solely to matters of appearance. This studio is not qualified to determine matters of safety, structural appropriateness or compliance with building regulations or compliance with various government codes. Any drawing that appears to specify construction methods should be considered as schematic only.

The ideas laid down within this drawing shall remain the intellectual property of the designer/studio and shall not be transferred to any other party without the written consent of the designer/studio.

This drawing is not to be reproduced without written permission. Drawings are susceptible to alteration, neither the designer, the studio nor any of its affiliates shall be liable for this drawing if altered, changed or falsified.

NO. **0490**

PROJECT
HOPE ON THE HILL

PROJECT STAGE
CONTRACT DOCUMENTS

GALLERY NAME
EXTERIOR INTERPRETIVE SIGNS

DRAWING TITLE
A - WELCOME KIOSK
TYPICAL DETAILS

DRAWING NUMBER **X1.10** REV **01**

ISSUE DATE	DRAWN BY	CHECKED BY	FORMAT
30 July 2025	sP	MB	ANSI D

Plot Date: Jul 22, 2025 0490 Hope on the Hill_CD v2024.wex

B - STORY PANEL
B1 / B2 / B3 / B4 / B5

**See Text & Graphics document for complete list of exhibit graphics and sign quantities.*

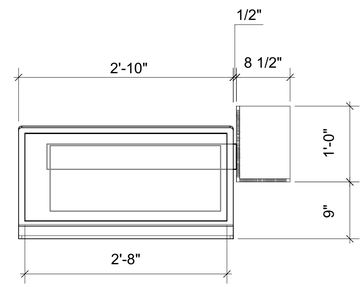

2 PLAN VIEW
Scale: 1" = 1'-0"

ML-02
SHORT PILLAR
- Welded Corten Steel
- Waterjet cutout patterning (see graphics)

*** CUTOUT PATTERNS SHOWN ARE FOR REFERENCE / PLACEMENT ONLY***
- see graphics document for details

GS-01
GRAPHIC PANEL
- Direct Embed Powder Coated Graphics (DEPG)

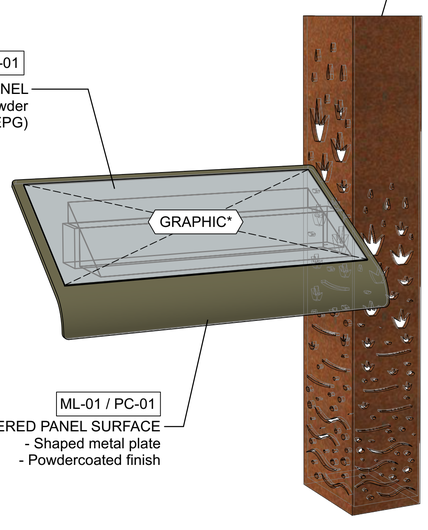

ML-01 / PC-01
CANTILEVERED PANEL SURFACE
- Shaped metal plate
- Powdercoated finish

SEE TYPICAL FOOTING DRAWINGS FOR GENERAL FOOTING DETAILS.

NOTE: Contractor to be responsible for engineering and construction of sign footings.

1 PERSPECITVE VIEW
Scale: N/A

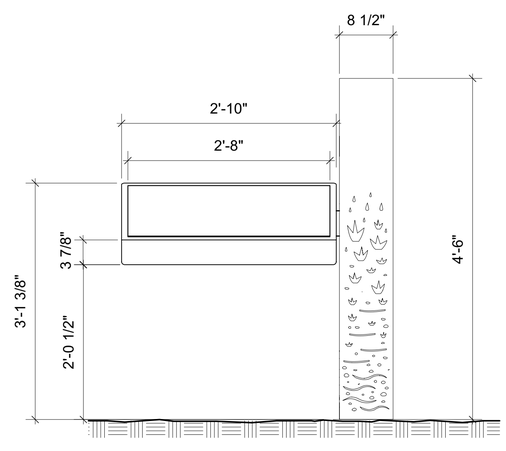

3 FRONT VIEW
Scale: 1" = 1'-0"

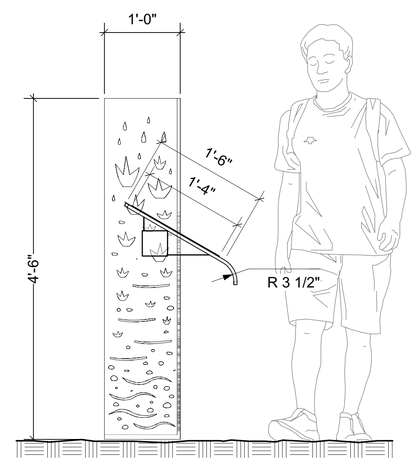

4 SIDE VIEW
Scale: 1" = 1'-0"

REV	DATE:	DESCRIPTION OF REVISION

CLIENT

BUREAU OF RECLAMATION

LGA ARCHITECTURE

PRINCIPLE EXHIBIT DESIGNER

ALDRICHPEARS ASSOCIATES

AldrichPears Associates
302 - 1930 Pandora Street,
Vancouver, BC, Canada
V5L 057
Tel: + 1 (604) 669-7044
Web: www.aldrichpears.com

Written dimensions on drawings shall have authority over scaled. Contractors and manufacturers shall verify and be responsible for all conditions on the job site. Any variation from drawings are to be reported to the designer/studio responsible for this drawing prior to commencing work. The designer responsible shall approve all production and detail drawings relating to this drawing. The specifications here relate solely to matters of appearance. This studio is not qualified to determine matters of safety, structural appropriateness or compliance with building regulations or compliance with various government codes. Any drawing that appears to specify construction methods should be considered as schematic only.

The ideas laid down within this drawing shall remain the intellectual property of the designer/studio and shall not be transferred to any other party without the written consent of the designer/studio.

This drawing is not to be reproduced without written permission. Drawings are susceptible to alteration, neither the designer, the studio nor any of its affiliates shall be liable for this drawing if altered, changed or falsified.

NO. **0490**

PROJECT
HOPE ON THE HILL

PROJECT STAGE
CONTRACT DOCUMENTS

GALLERY NAME
EXTERIOR INTERPRETIVE SIGNS

DRAWING TITLE
B - STORY PANEL
TYPICAL DETAILS

DRAWING NUMBER **X1.20** REV **01**

ISSUE DATE	DRAWN BY	CHECKED BY	FORMAT
30 July 2025	**sP**	**MB**	**ANSI D**

Plot Date: Jul 22, 2025 0490 Hope on the Hill_CD v2024.vwx

C1 - SPECIAL STORY - HOOVER DAM

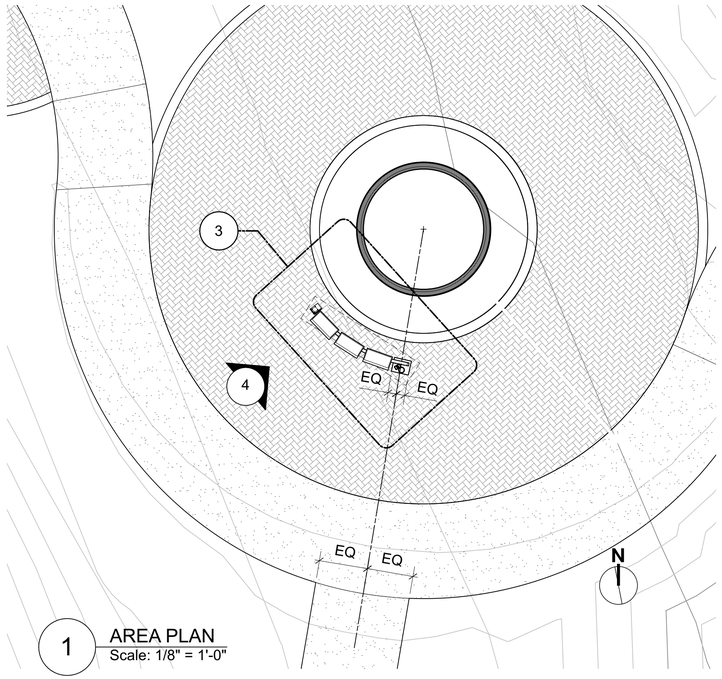

1 AREA PLAN
Scale: 1/8" = 1'-0"

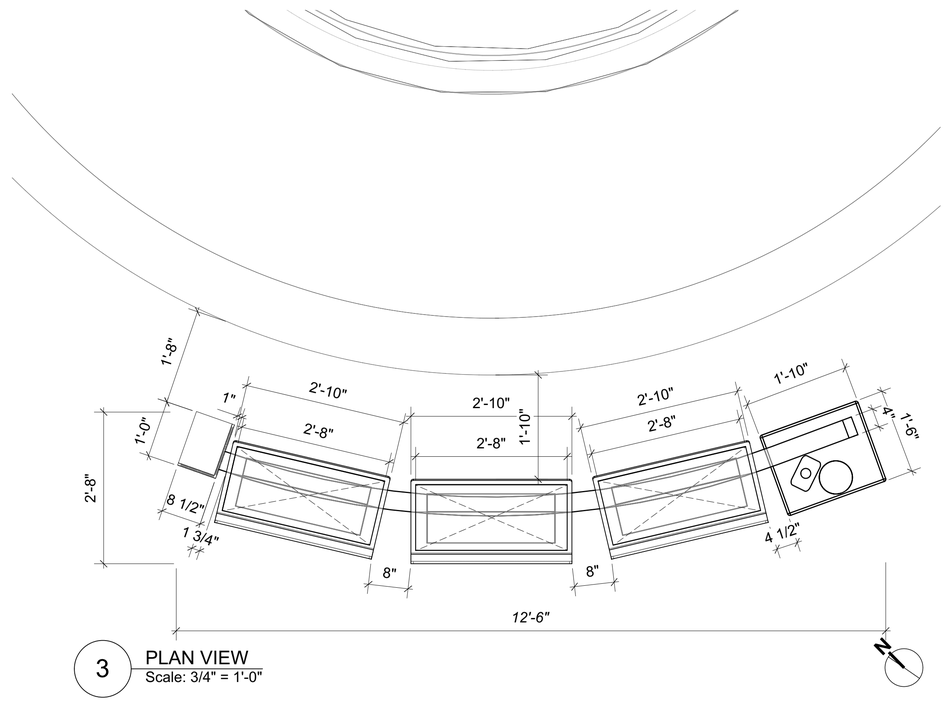

3 PLAN VIEW
Scale: 3/4" = 1'-0"

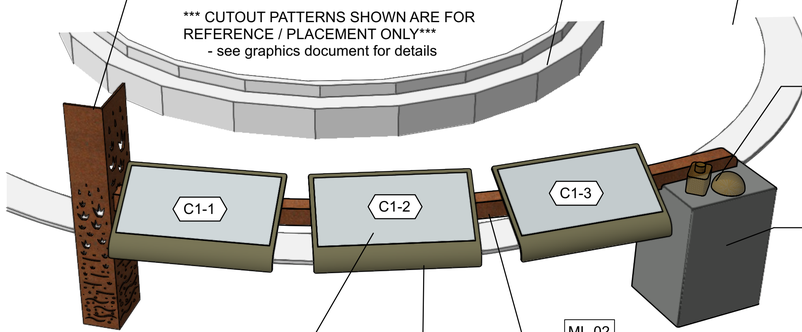

ML-02
SHORT PILLAR
- Welded Corten Steel
- Waterjet cutout patterning (see graphics)

*** CUTOUT PATTERNS SHOWN ARE FOR REFERENCE / PLACEMENT ONLY***
- see graphics document for details

TURBINE RING (by others)

CURB (by others)

ML-03
TACTILE OBJECTS
- Cast Bronze
- Secured to concrete plinth
- Objects TBD

CO-01
CONCRETE PLINTH
- Terminus/support for corten beam (tbd)
- Cast concrete w. surface for tactile object display

GS-01
GRAPHIC PANEL (TYP.)
- Direct Embed Powder Coated Graphics (DEPG)

ML-02
CORTEN BEAM
- curved corten steel
- mid-span support if reqired (tbd)

ML-01 / PC-01
PANEL SURFACE (TYP.)
- Shaped metal plate
- Powdercoated finish
- mounted to support beam below

SEE TYPICAL FOOTING DRAWINGS FOR GENERAL FOOTING DETAILS.
NOTE: Contractor to be responsible for engineering and construction of sign footings.

2 PERSPECITVE VIEW
Scale: N/A

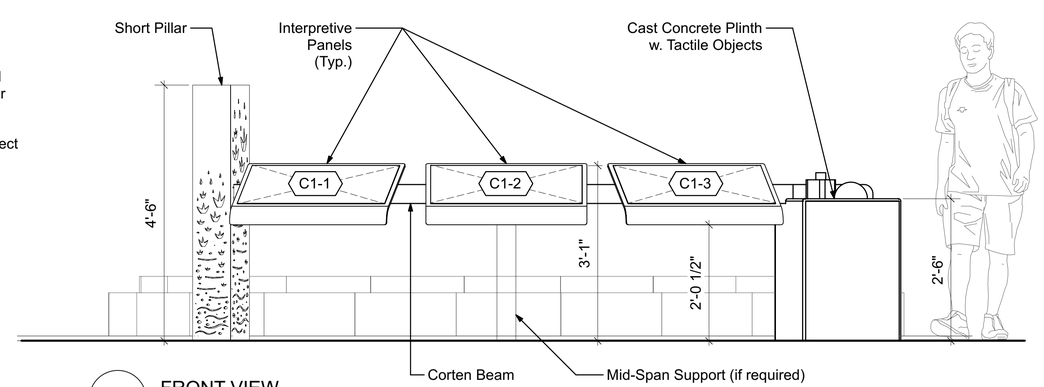

4 FRONT VIEW
Scale: 3/4" = 1'-0"

REV	DATE:	DESCRIPTION OF REVISION

CLIENT

BUREAU OF RECLAMATION

LGA ARCHITECTURE

PRINCIPLE EXHIBIT DESIGNER

ALDRICHPEARS ASSOCIATES
AldrichPears Associates
302 - 1930 Pandora Street,
Vancouver, BC, Canada
V5L 057
Tel: + 1 (604) 669-7044
Web: www.aldrichpears.com

Written dimensions on drawings shall have authority over scaled. Contractors and manufacturers shall verify and be responsible for all conditions on the job site. Any variation from drawings are to be reported to the designer/studio responsible for this drawing prior to commencing work. The designer responsible shall approve all production and detail drawings relating to this drawing. The specifications here relate solely to matters of appearance. This studio is not qualified to determine matters of safety, structural appropriateness or compliance with building regulations or compliance with various government codes. Any drawing that appears to specify construction methods should be considered as schematic only.

The ideas laid down within this drawing shall remain the intellectual property of the designer/studio and shall not be transferred to any other parly without the written consent of the designer/studio.

This drawing is not to be reproduced without written permission. Drawings are susceptible to alteration, neither the designer, the studio nor any of its affiliates shall be liable for this drawing if altered, changed or falsified.

NO. 0490

PROJECT
HOPE ON THE HILL

PROJECT STAGE
CONTRACT DOCUMENTS

GALLERY NAME
EXTERIOR INTERPRETIVE SIGNS

DRAWING TITLE
C1 - SPECIAL STORY - HOOVER DAM DETAILS

DRAWING NUMBER **X1.30** REV 01

ISSUE DATE	DRAWN BY	CHECKED BY	FORMAT
30 July 2025	sP	MB	ANSI D

Plot Date: Jul 22, 2025 0490 Hope on the Hill_CD v2024.rvx

C2 - SPECIAL STORY - LAWN

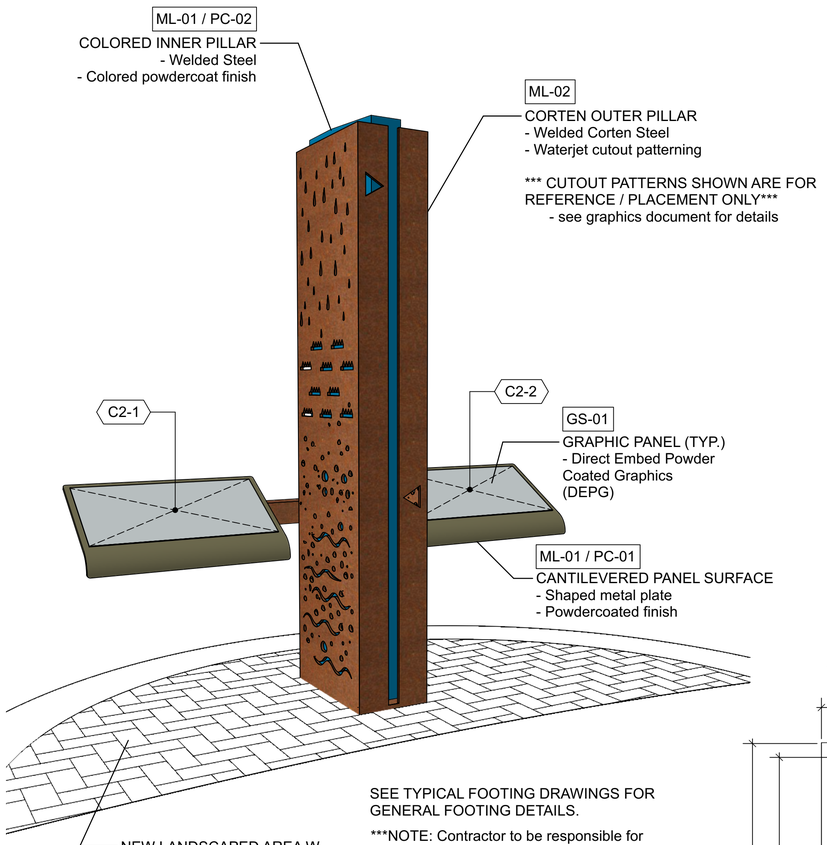

SEE TYPICAL FOOTING DRAWINGS FOR GENERAL FOOTING DETAILS.

NOTE: Contractor to be responsible for engineering and construction of sign footings.

1 PERSPECITVE VIEW
Scale: N/A

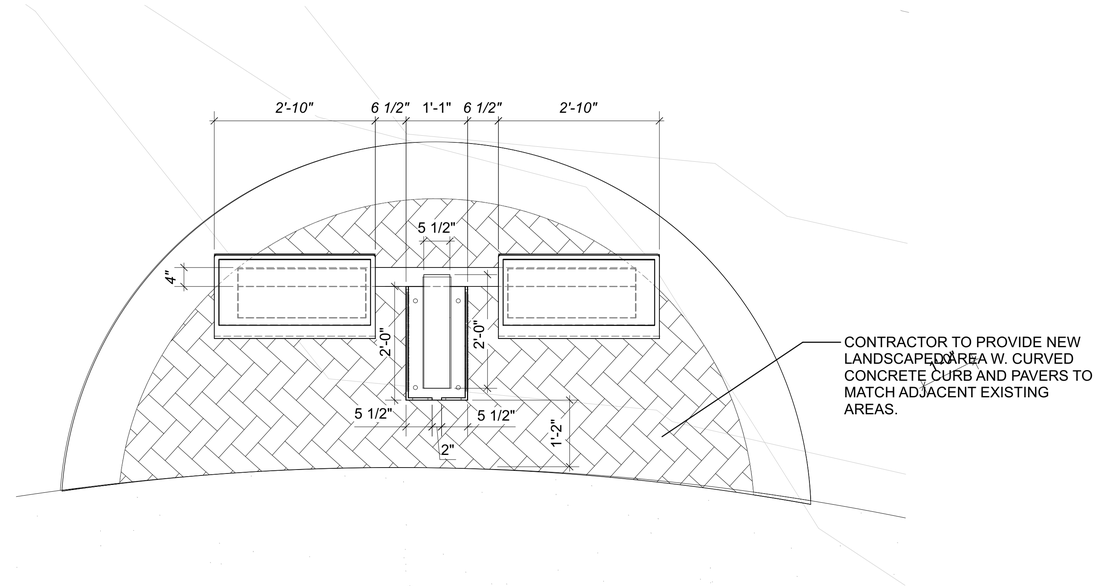

2 PLAN VIEW
Scale: 3/4" = 1'-0"

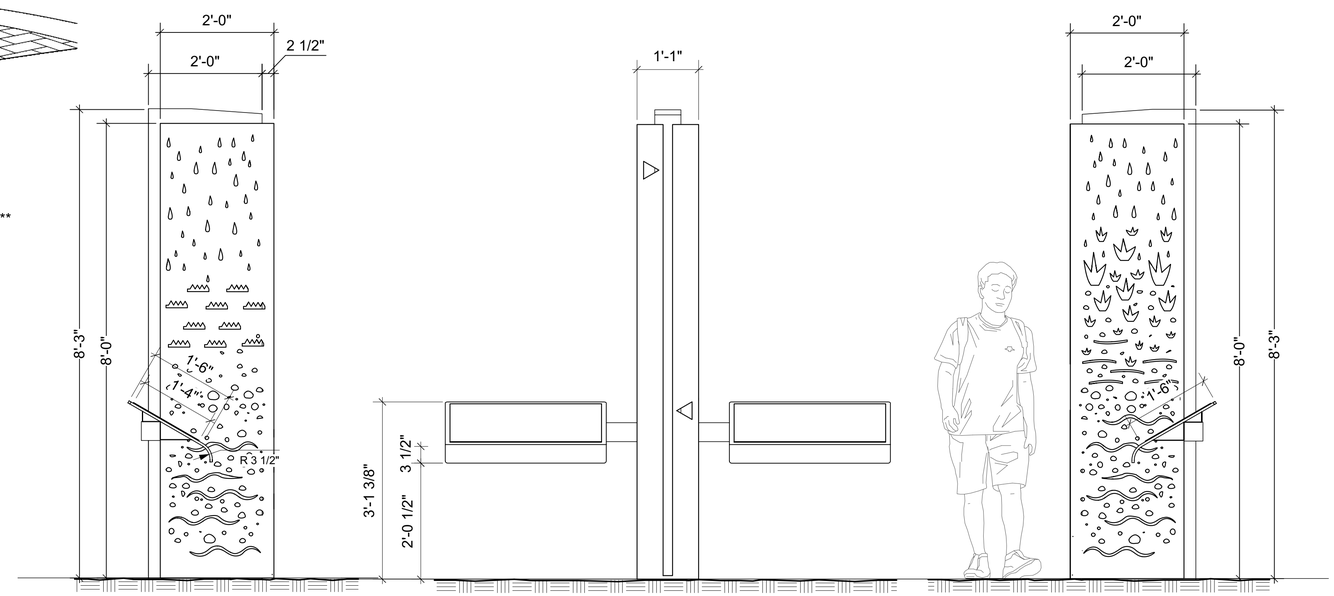

3 LEFT SIDE VIEW
Scale: 3/4" = 1'-0"

4 FRONT VIEW
Scale: 3/4" = 1'-0"

5 RIGHT SIDE VIEW
Scale: 3/4" = 1'-0"

REV	DATE:	DESCRIPTION OF REVISION

CLIENT

BUREAU OF RECLAMATION

LGA ARCHITECTURE

PRINCIPLE EXHIBIT DESIGNER

ALDRICHPEARS ASSOCIATES

AldrichPears Associates
302 - 1930 Pandora Street,
Vancouver, BC, Canada
V5L 057
Tel: + 1 (604) 669-7044
Web: www.aldrichpears.com

Written dimensions on drawings shall have authority over scaled. Contractors and manufacturers shall verify and be responsible for all conditions on the job site. Any variation from drawings are to be reported to the designer/studio responsible for this drawing prior to commencing work. The designer responsible shall approve all production and detail drawings relating to this drawing. The specifications here relate solely to matters of appearance. This studio is not qualified to determine matters of safety, structural appropriateness or compliance with building regulations or compliance with various government codes. Any drawing that appears to specify construction methods should be considered as schematic only.

The ideas laid down within this drawing shall remain the intellectual property of the designer/studio and shall not be transferred to any other party without the written consent of the designer/studio.

This drawing is not to be reproduced without written permission. Drawings are susceptible to alteration, neither the designer, the studio nor any of its affiliates shall be liable for this drawing if altered, changed or falsified.

NO. 0490

PROJECT
HOPE ON THE HILL

PROJECT STAGE
CONTRACT DOCUMENTS

GALLERY NAME
EXTERIOR INTERPRETIVE SIGNS

DRAWING TITLE
C2 - SPECIAL STORY - LAWN DETAILS

DRAWING NUMBER **X1.40** REV **01**

ISSUE DATE	DRAWN BY	CHECKED BY	FORMAT
30 July 2025	sP	MB	ANSI D

Plot Date: Jul 22, 2025 0490 Hope on the Hill_CD v2024.vwx

C3 - MAP - BOULDER CITY

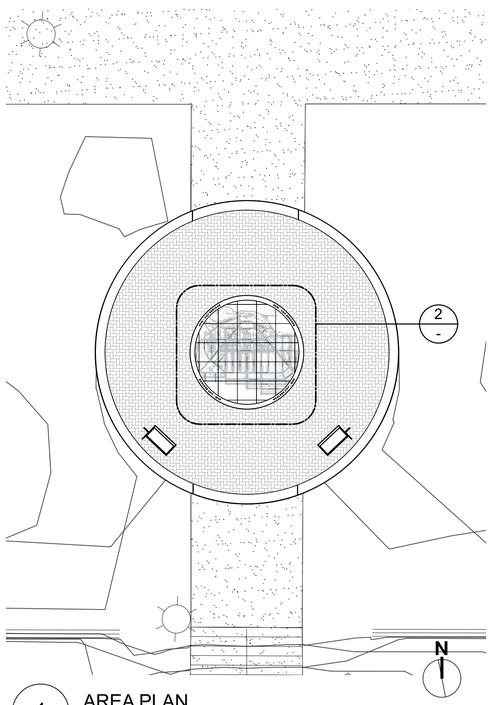

1 AREA PLAN
Scale: 1/8" = 1'-0"

CO-01
INSET BORDER RING
- Cast concrete w. etched or inlayed lettering (tbd)
- to be inset flush with surrounding pavers

ST-01
INSET CITY MAP
- Slate tiles w. etched/engraved map detailing
- to be inset flush with border ring

*** IMAGE FOR REFERENCE / PLACEMENT ONLY***
- Final graphics and detailing TBD
- Contractor to coordinate details with Design Authority & PRF producer.

PAVERS (by others)

C3-1 Boulder City Map c.1940

C3-2 Outer Ring Text (TBD)

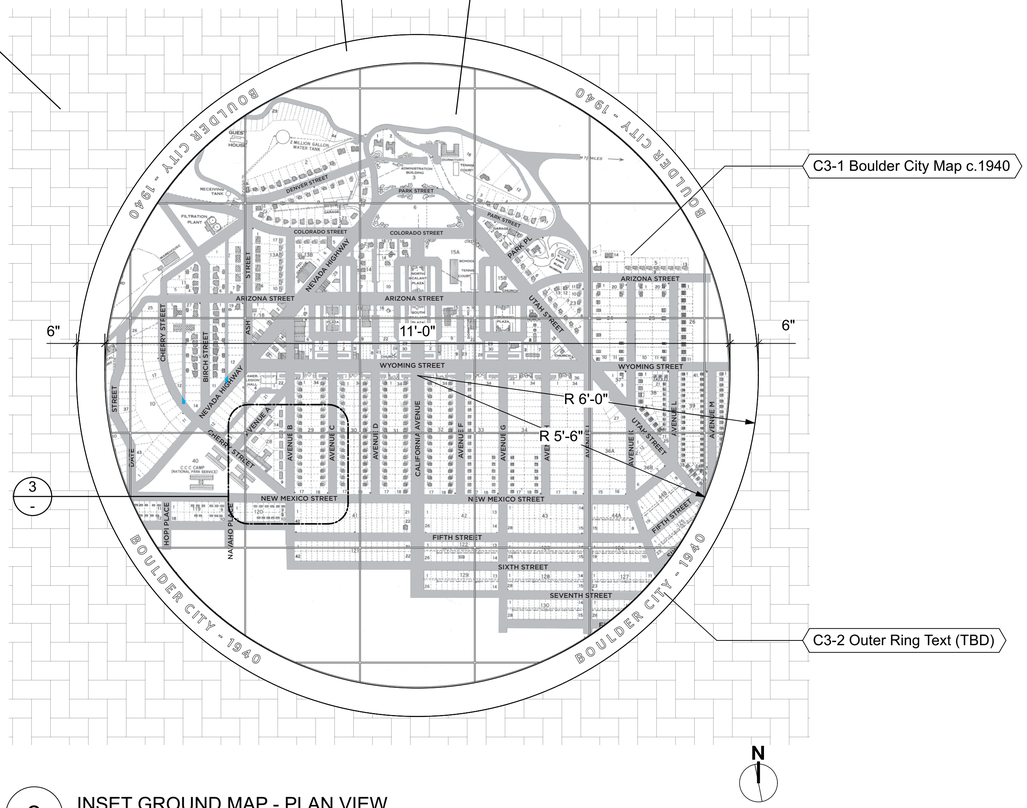

2 INSET GROUND MAP - PLAN VIEW
Scale: 3/4" = 1'-0"

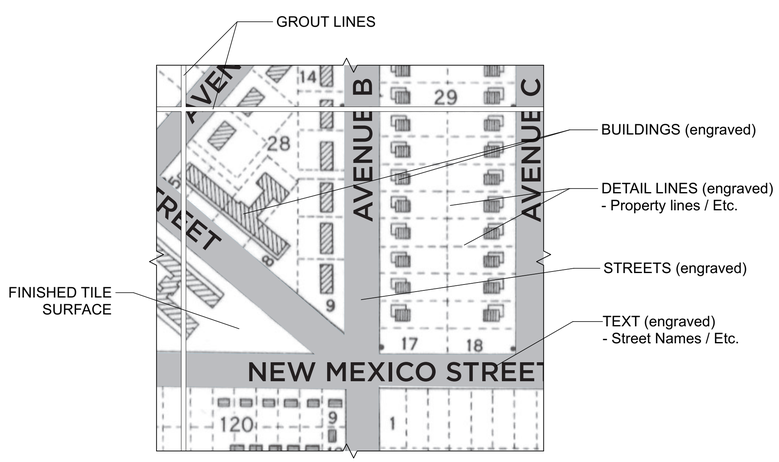

5 INSET GROUND MAP - DETAIL - PLAN VIEW
Scale: 3" = 1'-0"

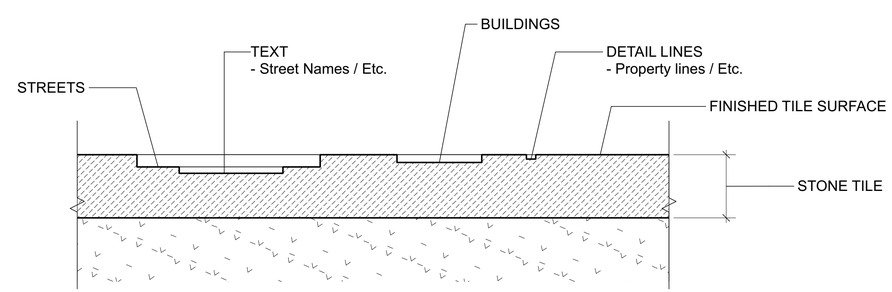

4 INSET GROUND MAP - TYPICAL ENGRAVING DETAIL - SECTION
Not to Scale

REV	DATE:	DESCRIPTION OF REVISION

CLIENT

BUREAU OF RECLAMATION

LGA ARCHITECTURE

PRINCIPLE EXHIBIT DESIGNER

ALDRICHPEARS ASSOCIATES
AldrichPears Associates
302 - 1930 Pandora Street,
Vancouver, BC, Canada
V5L 057
Tel: + 1 (604) 669-7044
Web: www.aldrichpears.com

Written dimensions on drawings shall have authority over scaled. Contractors and manufacturers shall verify and be responsible for all conditions on the job site. Any variation from drawings are to be reported to the designer/studio responsible for this drawing prior to commencing work. The designer responsible shall approve all production and detail drawings relating to this drawing. The specifications here relate solely to matters of appearance. This studio is not qualified to determine matters of safety, structural appropriateness or compliance with building regulations or compliance with various government codes. Any drawing that appears to specify construction methods should be considered as schematic only.

The ideas laid down within this drawing shall remain the intellectual property of the designer/studio and shall not be transferred to any other party without the written consent of the designer/studio.

This drawing is not to be reproduced without written permission. Drawings are susceptible to alteration, neither the designer, the studio nor any of its affiliates shall be liable for this drawing if altered, changed or falsified.

NO. 0490

PROJECT
HOPE ON THE HILL

PROJECT STAGE
CONTRACT DOCUMENTS

GALLERY NAME
EXTERIOR INTERPRETIVE SIGNS

DRAWING TITLE
C3 - MAP - BOULDER CITY DETAILS

DRAWING NUMBER **X1.50** REV 01

ISSUE DATE	DRAWN BY	CHECKED BY	FORMAT
30 July 2025	sP	MB	ANSI D

Plot Date: Jul 22, 2025 0490 Hope on the Hill_CD v2024.vwx

D - TEASER
D1 / D2 / D3 / D4

**See Text & Graphics document for complete list of exhibit graphics and sign quantities.*

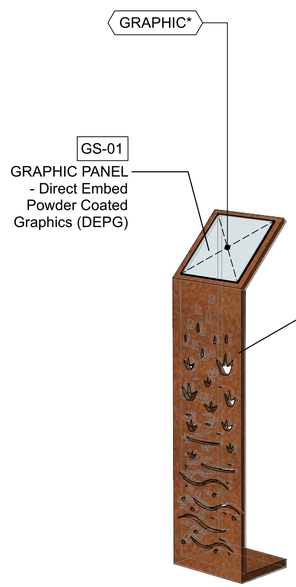

NOTE: Contractor to be responsible for engineering and construction of sign footings.

1 PERSPECITVE VIEW
Scale: N/A

SEE TYPICAL FOOTING DRAWINGS FOR GENERAL FOOTING DETAILS.

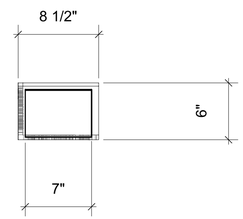

2 PLAN VIEW
Scale: 1 1/2" = 1'-0"

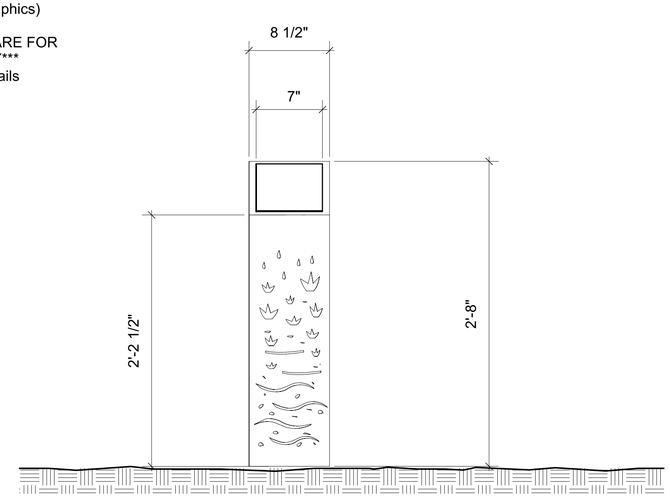

3 FRONT VIEW
Scale: 1 1/2" = 1'-0"

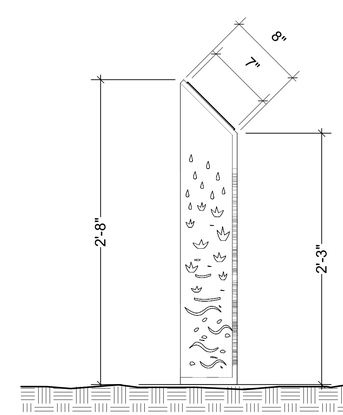

4 SIDE VIEW
Scale: 1 1/2" = 1'-0"

REV	DATE:	DESCRIPTION OF REVISION

CLIENT

BUREAU OF RECLAMATION

LGA ARCHITECTURE

PRINCIPLE EXHIBIT DESIGNER

ALDRICHPEARS ASSOCIATES

AldrichPears Associates
302 - 1930 Pandora Street,
Vancouver, BC, Canada
V5L 057

Tel: + 1 (604) 669-7044
Web: www.aldrichpears.com

Written dimensions on drawings shall have authority over scaled. Contractors and manufacturers shall verify and be responsible for all conditions on the job site. Any variation from drawings are to be reported to the designer/studio responsible for this drawing prior to commencing work. The designer responsible shall approve all production and detail drawings relating to this drawing. The specifications here relate solely to matters of appearance. This studio is not qualified to determine matters of safety, structural appropriateness or compliance with building regulations or compliance with various government codes. Any drawing that appears to specify construction methods should be considered as schematic only.

The ideas laid down within this drawing shall remain the intellectual property of the designer/studio and shall not be transferred to any other party without the written consent of the designer/studio.

This drawing is not to be reproduced without written permission. Drawings are susceptible to alteration, neither the designer, the studio nor any of its affiliates shall be liable for this drawing if altered, changed or falsified.

NO. **0490**

PROJECT
HOPE ON THE HILL

PROJECT STAGE
CONTRACT DOCUMENTS

GALLERY NAME
EXTERIOR INTERPRETIVE SIGNS

DRAWING TITLE
D - TEASER
TYPICAL DETAILS

DRAWING NUMBER **X1.60** REV **01**

ISSUE DATE	DRAWN BY	CHECKED BY	FORMAT
30 July 2025	**sP**	**MB**	**ANSI D**

Plot Date: Jul 22, 2025 0490 Hope on the Hill_CD v2024.rvx

E - PLANT ID / WARNING

01

E1 / E2 / E3 / E4 / E5 / E6 / E7 / E8 / E9 / E10 / E11 / E12 / E13

**See Text & Graphics document for complete list of exhibit graphics and sign quantities.*

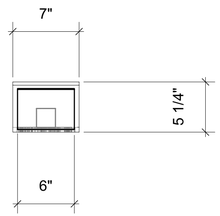

SEE TYPICAL FOOTING DRAWINGS FOR GENERAL FOOTING DETAILS.

2 PLAN VIEW
Scale: 1 1/2" = 1'-0"

GRAPHIC*

GS-01
GRAPHIC PANEL
- Direct Embed
Powder Coated
Graphics (DEPG)

ML-02
PLANT ID POST
- Welded Corten Steel
- Waterjet cutout patterning (see graphics)

*** CUTOUT PATTERNS SHOWN ARE FOR REFERENCE / PLACEMENT ONLY***
- see graphics document for details

NOTE: Contractor to be responsible for engineering and construction of sign footings.

1 PERSPECITVE VIEW
Scale: N/A

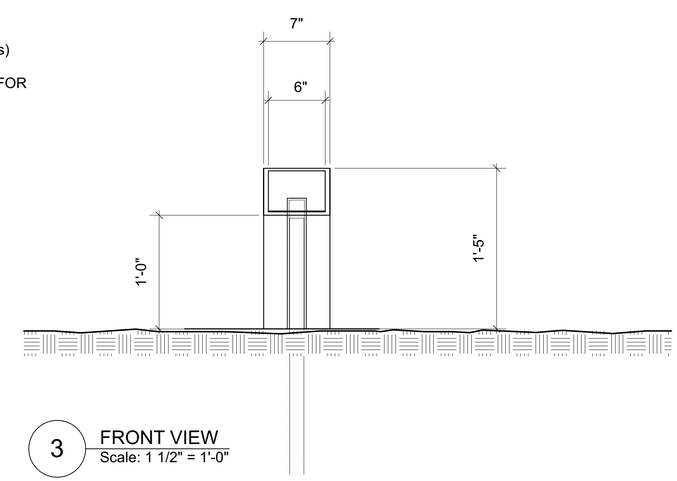

3 FRONT VIEW
Scale: 1 1/2" = 1'-0"

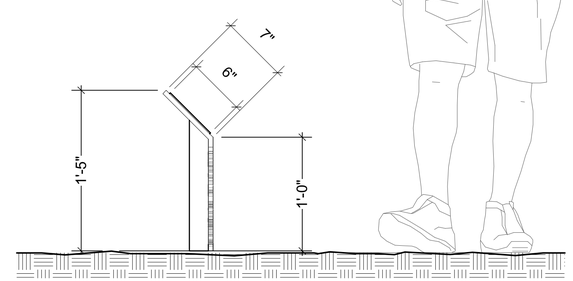

4 SIDE VIEW
Scale: 1 1/2" = 1'-0"

REV	DATE:	DESCRIPTION OF REVISION
01	30 July 2025	E13 (Warning Signs) added

CLIENT

BUREAU OF RECLAMATION

LGA ARCHITECTURE

PRINCIPLE EXHIBIT DESIGNER

ALDRICHPEARS ASSOCIATES
AldrichPears Associates
302 - 1930 Pandora Street,
Vancouver, BC, Canada
V5L 057
Tel: + 1 (604) 669-7044
Web: www.aldrichpears.com

Written dimensions on drawings shall have authority over scaled. Contractors and manufacturers shall verify and be responsible for all conditions on the job site. Any variation from drawings are to be reported to the designer/studio responsible for this drawing prior to commencing work. The designer responsible shall approve all production and detail drawings relating to this drawing. The specifications here relate solely to matters of appearance. This studio is not qualified to determine matters of safety, structural appropriateness or compliance with building regulations or compliance with various government codes. Any drawing that appears to specify construction methods should be considered as schematic only.

The ideas laid down within this drawing shall remain the intellectual property of the designer/studio and shall not be transferred to any other party without the written consent of the designer/studio.

This drawing is not to be reproduced without written permission. Drawings are susceptible to alteration, neither the designer, the studio nor any of its affiliates shall be liable for this drawing if altered, changed or falsified.

NO. **0490**

PROJECT
HOPE ON THE HILL

PROJECT STAGE
CONTRACT DOCUMENTS

GALLERY NAME
EXTERIOR INTERPRETIVE SIGNS

DRAWING TITLE
E - PLANT ID
TYPICAL DETAILS

DRAWING NUMBER **X1.70** REV **01**

ISSUE DATE	DRAWN BY	CHECKED BY	FORMAT
30 July 2025	**sP**	**MB**	**ANSI D**

Plot Date: Jul 22, 2025 0490 Hope on the Hill_CD v2024.vwx