GOLDEN GATE NATIONAL RECREATION AREA

REPLACE STINSON BEACH LIFEGUARD TOWER
AND VISITOR SNACK BAR

PMIS NO. 318662

VOLUME 01
DIVISION ONE SPECIFICATIONS

NATIONAL PARK SERVICE
FINAL CONSTRUCTION DOCUMENTS
SEPTEMBER 2025

DOCUMENT 000107 - SEALS PAGE

1.1 DESIGN PROFESSIONALS OF RECORD

A. Landscape Architect:

1. Aicha Menendez, DHM Design
2. LA 6689
3. Responsible for Sections
   05 52 13 Pipe and Tube Railings
   10 73 13 Awnings
   31 22 19 Topsoil
   32 91 13 Soil Preparation
   32 93 00 Plants

END OF DOCUMENT 000107

DOCUMENT 000107 - SEALS PAGE

1.1 DESIGN PROFESSIONALS OF RECORD

A. Civil Engineer:

1. GREGORY V. MURPHY, Calibre Engineering, LLC
2. CE 44354 .
3. Responsible for Sections
   03 10 00 Concrete Forming and Accessories
   03 20 00 Concrete Reinforcing
   03 39 00 Concrete Curing
   31 05 13 Soils for Earthwork
   31 10 00 Site Clearing
   31 22 13 Rough Grading
   31 23 16 Excavation
   31 23 16.13 Trenching
   31 23 19 Dewatering
   31 23 23 Fill
   31 25 00 Erosion and Sedimentation Controls
   32 05 13 Soils for Exterior Improvements
   32 05 16 Aggregates for Exterior Improvements
   32 11 23 Aggregates Base Courses
   32 12 16 Asphalt Paving
   32 13 13 Concrete Paving
   33 01 10.58 Disinfection of Water Utility Piping Systems
   33 01 30.86 Manhole Rim Adjustment
   33 05 05.31 Hydrostatic Testing
   33 05 05.33 Infiltration and Exfiltration Testing
   33 05 09.33 Thrust Restraint for Utility Piping
   33 05 53 Identification for Utilities Piping and Equipment
   33 05 61 Concrete Manholes
   33 05 63 Concrete Vaults and Chambers
   33 05 97 Identification and Signage for Utilities
   33 14 16 Site Water Utility Distribution Piping
   33 14 17 Site Water Service Utility Laterals
   33 14 19 Valves and Hydrants for Water Utility Service
   33 31 11 Sanitary Sewerage Piping

END OF DOCUMENT 000107

DOCUMENT 000107 - SEALS PAGE

1.1 DESIGN PROFESSIONALS OF RECORD

A. Architect:

1. Wells Squier, Anderson Hallas Architects
2. C-38581
3. Responsible for Sections
   05 50 00 Metal Fabrications
   05 71 13 Fabricated Metal Spiral Stairs
   05 73 00 Decorative Metal Railings
   06 15 33 Wood Patio Decking
   06 20 13 Exterior Finish Carpentry
   06 20 23 Interior Finish Carpentry
   06 40 00 Architectural Woodwork
   07 11 13 Bituminous Dampproofing
   07 21 00 Thermal Insulation
   07 27 26 Fluid-Applied Membrane Air Barriers
   07 54 19 Polyvinyl-Chloride (PVC) Roofing
   07 62 00 Sheet Metal Flashing and Trim
   07 72 00 Roof Accessories
   07 84 13 Penetration Firestopping
   07 84 43 Joint Firestopping
   07 92 00 Joint Sealants
   08 12 13 Hollow Metal Frames
   08 14 16 Flush Wood Doors
   08 22 00 Fiberglass Reinforced Plastic (FRP) Doors and Frames
   08 31 13 Access Doors and Frames
   08 36 13 Sectional Doors
   08 41 13 Aluminum-Framed Entrances and Storefronts
   08 44 13 Glazed Aluminum Curtain Walls
   08 51 13 Aluminum Windows
   08 71 00 Door Hardware
   08 80 00 Glazing
   09 29 00 Gypsum Board
   09 51 13 Acoustical Panel Ceilings
   09 65 43 Linoleum Flooring
   09 67 23 Resinous Flooring
   09 91 13 Exterior Painting
   09 91 23 Interior Painting
   09 93 00 Staining and Transparent Finishing
   09 96 46 Intumescent Painting
   10 14 23.16 Room-Identification Panel Signage
   10 26 00 Wall and Door Protection
   10 28 00 Toilet, Bath, and Laundry Accessories
   10 44 13 Fire Protection Cabinets
   10 50 30 Gear Lockers Wall Mounted
   11 00 00 Requirements for Miscellaneous Equipment

11 40 00 Food Service Equipment
12 36 16 Metal Countertops
12 36 61.16 Solid Surfacing Countertops

END OF DOCUMENT 000107

DOCUMENT 000107 - SEALS PAGE

1.1 DESIGN PROFESSIONALS OF RECORD

A. Structural Engineer:

1. Kirk I. Mettam, Silman
2. C 56767
3. Responsible for Sections
   03 30 00 Cast in Place Concrete
   05 12 00 Structural Steel Framing
   06 10 00 Rough Carpentry
   31 62 13 Concrete Piles
   31 62 19 Timber Piles

END OF DOCUMENT 000107

DOCUMENT 000107 - SEALS PAGE

1.1 DESIGN PROFESSIONALS OF RECORD

A. HVAC and Plumbing Engineer:

1. Denise Dihle, 360 Engineering
2. 35692
3. Responsible for Sections
   22 05 00 Common Work Results for Plumbing
   22 05 18 Escutcheons for Plumbing Piping
   22 05 19 Meters and Gages for Plumbing Piping
   22 05 23.12 Ball Valves for Plumbing Piping
   22 05 48 Vibration and Seismic Controls for Piping and Equipment
   22 05 53 Identification for Plumbing Piping and Equipment
   22 07 19 Plumbing Piping Insulation
   22 11 16 Domestic Water Piping
   22 11 19 Domestic Water Piping Specialties
   22 11 23.21 Inline, Domestic-Water Pumps
   22 13 16 Sanitary Waste and Vent Piping
   22 13 19 Sanitary Waste Piping Specialties
   22 14 14 Storm Drainage Piping
   22 14 23 Storm Drainage Piping Specialties
   22 33 00 Electric, Domestic-Water Heaters
   22 42 13.13 Commercial Water Closets
   22 42 16.13 Commercial Lavatories
   22 42 16.16 Commercial Sinks
   22 42 23 Commercial Showers
   23 05 00 Common Work Results for HVAC
   23 05 29 Hangers and Supports for HVAC Piping and Equipment
   23 05 48 Vibration and Seismic Controls for HVAC
   23 05 53 Identification for HVAC Piping and Equipment
   23 05 93 Testing, Adjusting, and Balancing for HVAC
   23 07 13 Duct Insulation
   23 31 13 Metal Ducts
   23 33 00 Air Duct Accessories
   23 34 16 Centrifugal HVAC Fans
   23 74 23.16 Packaged, Electric, Outdoor, Heating-Only Makeup-Air Units
   23 82 36 Finned-Tube Radiation Heaters
   23 82 39.13 Cabinet Unit Heaters

END OF DOCUMENT 000107

DOCUMENT 000107 - SEALS PAGE

1.1 DESIGN PROFESSIONALS OF RECORD

A. Electrical Engineer:

1. Jon Brooks
2. E-17048
3. Responsible for Sections
   260500 - COMMON WORK RESULTS FOR ELECTRICAL
   260519 - LOW-VOLTAGE ELECTRICAL POWER CONDUCTORS AND CABLES
   260526 - GROUNDING AND BONDING FOR ELECTRICAL SYSTEMS
   260529 - HANGERS AND SUPPORTS FOR ELECTRICAL SYSTEMS
   260533 - RACEWAY AND BOXES FOR ELECTRICAL SYSTEMS
   260553 - IDENTIFICATION FOR ELECTRICAL SYSTEMS
   260923 - LIGHTING CONTROL DEVICES
   262413 – SWITCHBOARDS
   262416 - PANELBOARDS
   262713 - ELECTRICITY METERING
   262726 - WIRING DEVICES
   264113 - LIGHTNING PROTECTION FOR STRUCTURES
   264313 - SURGE PROTECTION FOR LOW-VOLTAGE ELECTRICAL POWER CIRCUITS
   270010 - Supplemental Requirements for Communications
   270526 - Grounding and Bonding for Communications Systems
   270528 - Pathways for Communications Systems
   270529 - Hangers and Supports for Communications Systems
   270544 - Sleeves and Sleeve Seals for Communications Pathways and Cabling
   270553 - Identification for Communications Systems
   271116 - Communications Racks, Frames, and Enclosures
   271513 - Communications Copper Horizontal Cabling
   280010 - Supplemental Requirements for Electronic Safety and Security
   283100 - Intrusion Detection
   283111 - DIGITAL, ADDRESSABLE FIRE-ALARM SYSTEM

END OF DOCUMENT 000107

GOGA 318662

TABLE OF CONTENTS – VOLUME 01

000107 Seals Page

DIVISION 01 - GENERAL REQUIREMENTS

01 11 00 Summary of Work
01 26 01 Contract Modification Procedures
01 27 00 Definition of Contract Line Items
01 31 00 Project Management & Coordination
01 32 16 Construction Schedule
01 32 33 Photographic Documentation
01 33 23 Submittal Procedures
01 33 23A Submittal List
01 34 00 Natural Habitat Requirements
01 35 13 Archeological Protection
01 35 23 Safety Requirements
01 35 30 Hazardous Materials
01 40 00 Quality Requirements
01 42 00 Reference Standards
01 45 00 Environmental Protection
01 50 00 Temporary Facilities and Controls
01 50 02 Trucking
01 57 19.11 Indoor Air Quality Management
01 57 19.12 Noise & Exterior Lighting Management
01 57 23 Temporary Storm Water Pollution Prevention
01 60 00 Soils Management
01 67 00 Product Requirements
01 7329 Cutting and Patching
01 73 40 Execution
01 74 19 Construction Waste Management and Disposal
01 77 00 Closeout Procedures
01 79 00 Demonstration and Training
01 79 00A Closeout and Operations & Maintenance Requirements
01 81 13 Sustainable Design Requirements for Non LEED™ Projects
01 91 14 Total Building Commissioning

END OF TABLE OF CONTENTS

SECTION 01 11 00 - SUMMARY OF WORK

PART 1 - GENERAL

1.1 SUMMARY

A. This Section includes the following:
   1. Work covered by the Contract Documents.
   2. Work Under other Contracts.
   3. Government Furnished Materials.
   4. Contractor use of the site
   5. Contractor access and use of site
   6. Occupancy requirements for buildings.
   7. Work Restrictions.
   8. Special Construction Requirements.
   9. Field Verification
   10. Storm Water Pollution Prevention Plan

1.2 WORK COVERED BY CONTRACT DOCUMENTS

A. Project Location: The project location is in Stinson Beach within the Golden Gate National Recreation Area (GOGA). The Work consists of the following:

   1. The Work includes but is not limited to demolition of the existing lifeguard tower and snack bar; demolition and/or abandonment of utilities; demolition of site features and removal and transplanting of plants to facilitate the new construction; construction of new three-story lifeguard tower and single-story garage and snack bar with new mechanical, electrical, and plumbing utilities. Site improvements include partial replacement of access drive, new concrete aprons, wood boardwalk ramp and deck, and utilities. Restoration of the site includes planting at areas disturbed by construction activities, mitigation planting, and site protections to create new dune and wetland habitat. Environmental protection of the surrounding dunes, plants, trees, sand, wetlands, and wildlife habitat is a critical component of all aspects of this work and required as an on-going component of the work. Reference contract documents for the full project scope.

   2. Reference Section 01 27 00 “Definition of Contract Line Items” for a description of the base bid and bid options.

   3. A Construction Schedule laying out project start and completion dates along with scope tasks shall be submitted per the Spec Section 01 3216 “Construction Schedule.”

   4. This project is not seeking a Certification Level according to the U.S. Green Building Council's Leadership in Energy & Environmental Design (LEED) Rating System. See Division 01 Section "Sustainable Design Requirements for Non LEED Projects” for additional information

B. Project will be constructed under a single prime contract.

1.3 WORK UNDER OTHER CONTRACTS

A. General: The National Park Service and/or facilities-based partners of the National Park Service may, during the course of this Contract, have other construction work in progress within the park and near this project site. The Contractor shall work with the NPS Project Manager and others as necessary to minimize impacts and coordinate activities of the work.

1.4 GOVERNMENT FURNISHED MATERIALS

A. Plant material shall be propagated and supplied by the Park. Transport of plant material from the Park nursery to the site, care of the live plant material, and planting shall be by the Contractor.

1.5 CONTRACTOR USE OF SITE

A. The Contractor's use of the premises is restricted to the designated work area. Materials and equipment must be stored inside the work area and staging areas. Contractor is to coordinate final boundaries with the NPS Project Manager. Modifications to the areas are to be approved in writing by the NPS Project Manager

B. Temporary facilities include: portable toilets rented by the contractor and cleaned on a weekly or as-needed basis by the contractor.

C. Staging Area: Contractor shall work with NPS to identify an appropriate staging area(s) at the Stinson Beach parking areas.

D. Protection of Historic Features: The Golden Gate National Recreation Area contains many project locations which are highly sensitive sites and may contain historical resources. The Contractor shall closely follow the plans shown and alert the NPS Project Manager immediately of any major deviations. A start-up meeting with the NPS Project Manager will be required prior to beginning work. Confine all operations to work limits of the project. There are no known historic features located within the work limits. If on-site discoveries occur, the Contractor shall stop work in that area and notify the NPS Project Manager immediately. Application of spray paint or any permanent markings to site features is prohibited. (Only chalk-based paint or crayon should be used).

E. Preservation of Natural Features:

1. Prevent damage to natural surroundings. Restore damaged areas as directed and approved by the NPS Project Manager, at no additional expense to the Government.

2. Maintain the temporary fencing throughout the duration of construction. Remove fencing when construction is complete as directed by the NPS Project Manager.

3. Provide temporary barriers to protect existing trees and plants and root zones.

4. Do not remove, injure, or destroy trees or other plants without prior approval. Consult with NPS Project Manager and remove agreed on roots and branches that interfere with construction.

5. Do not fasten ropes, cables, or guys to existing trees.

6. Carefully supervise excavating, grading, filling, and other construction operations near trees to prevent damage.

7. Take measures to prevent equipment from compacting soils adjacent to or within the construction zone that will not be displaced by a constructed facility such as the parking lot.

8. All geologic and fossil materials within the park are protected. Avoid disturbing soils or rock within or outside the project, except as specified in the contract documents or as directed by the NPS Project Manager.

9. Reference Section 01 34 00" Natural Habitat Requirements" for protection of natural resources.

10. Reference Section 01 45 00 "Environmental Protection and Traffic Control" for protection of wildlife resources.

F. Do not perform work when climate and existing site conditions will not provide satisfactory results (e.g. wet). The NPS Project Manager reserves the right to deny construction procedures on days that are deemed to be unfavorable for installation. Proceed with construction only when existing and forecasted weather conditions permit construction to be performed when beneficial and optimum results may be obtained.

G. All vehicles should be equipped with absorptive pads while on park property in order to quickly contain any spills of oil or hydraulic fluid. Any such spills must be reported to the NPS Project Manager as soon as is safely possible.

H. Driveways and Entrances: Keep driveways and entrances serving premises clear and available to Government, Government's employees, and emergency vehicles at all times. Do not use these areas for parking or storage of materials.

1. Schedule deliveries to minimize use of driveways and entrances.
2. Schedule deliveries to minimize space and time requirements for storage of materials and equipment on-site.

I. Construction Camp: Establishment of a camp within the park will not be permitted.

J. Hauling Restrictions: Comply with all legal load restrictions in the hauling of materials. Load restrictions on park roads are identical to the state load restrictions with such additional regulations as may be imposed by the Park Superintendent. Information regarding rules and regulations for vehicular traffic on park roads may be obtained from the Office of the Park Superintendent. A special permit will not relieve Contractor of liability for damage which may result from moving of equipment. See Section 01 50 02, Trucking.

K. Contractor shall provide OSHA and other required postings regard safety at the site.

L. All Contractor employees and subcontractor employees shall be advised of the rules and regulations of the National Park Service.

M. Contractor and subcontractor vehicles not required on the worksite itself shall be parked in a location to be reviewed and approved by NPS.

N. Utilities to support construction activities by contractor:

1. Water: Contractor to install NPS approved backflow preventer and meter at NPS specified location. Prior to using water, agreement between NPS and contractor must be signed.

1.6 PUBLIC USE OF SITE

A. Contractor shall at all times conduct his operations to ensure the least inconvenience to the public. Road closures may be permitted, when required, upon specific approval of NPS Project Manager. Submit closure request to NPS Project Manager at least 14 calendar days in advance of requested closure date. Closure may be permitted for a maximum of four hours at a time.

B. Emergency Vehicle Access: Contractor must maintain access for emergency vehicles at all times unless specifically exempted as a condition within the project contract. Any exemption should be limited to minimal temporary delays and include notification to park dispatch. Contractor will stop all work as necessary to allow passage of emergency vehicles and direct traffic flow to accommodate immediate passage of these vehicles. For those projects in which trenching is required, the Contractor shall have a sufficient number of steel plates on hand to bridge any gap necessary for emergency vehicle access.

C. Contractor shall at all times conduct his operations to ensure the least inconvenience to the public. Contractor shall make any and all necessary measures to protect the general public from the construction sites. Temporary walk closures will be permitted, when required, upon specific approval of NPS Project Manager for a maximum amount of time as approved by NPS.

D. Contractor to identify and provide all means necessary for maintaining ABAAS access routes, egress routes, emergency access and service access within NPS property. Contractor to sequence construction as necessary and relocate temporary ramps, fencing and gates, signage, barriers and other identified means necessary for access as needed throughout the construction period.

1.7 OCCUPANCY REQUIRMENTS FOR BUILIDINGS

A. New Buildings

1. Government Occupancy of Completed Areas of Construction: Government reserves the right to occupy and to place and install equipment in completed areas of building, provided such occupancy does not interfere with completion of the Work. Such placement of equipment and partial occupancy shall not constitute acceptance of the entire project.
   a. NPS Project Manager will prepare a Beneficial Occupancy letter for each specific portion of the Work to be occupied before Government occupancy.
   b. Obtain a Certificate of Occupancy from the NPS before Government occupancy.
   c. Before partial Government occupancy, mechanical, plumbing and electrical systems shall be fully operational, and required tests and inspections shall be successfully completed. On occupancy, Government will operate and maintain mechanical, plumbing and electrical systems serving occupied portions of building.
   d. On occupancy, Government will assume responsibility for maintenance and custodial service for occupied portions of building.

B. CONDUCT OF OPERATIONS

1. Contractor personnel shall comply with all Federal and State law and regulations, including the Golden Gate National Recreation Area Superintendent's Compendium. Any exception must be specifically justified and approved in writing by the NPS Project Manager.
2. The Superintendent's Compendium can be found at this internet address: https://www.nps.gov/goga/learn/management/lawsandpolicies.htm
3. No signs or advertisements (except those specified herein) shall be displayed on the construction site or within the park unless approved by the NPS Project Manager.

1.8 WORK RESTRICTIONS

A. On Site Work Hours: The 40 hour work week shall be generally performed during normal business working hours of 7:00 a.m. to 5:30p.m., Monday through Friday, except when available daylight does not permit such or otherwise indicated.

1. Work will be permitted in the evenings or on Saturdays or Sundays, only by prior authorization of the NPS NPS Project Manager. Submit requests 72 hours in advance of the work to the NPS Project Manager for approval.
2. Proposed exterior lighting for night work should be reviewed/approved by NPS Project Manager. See section 01 5719.12 Noise and Exterior Lighting Management.
3. No onsite work shall be performed during federal holiday periods unless otherwise directed by the NPS Project Manager.
4. Early Morning Hours: See section 01 5719.12 Noise and Exterior Lighting Management.
5. Hours for **Noisy Activity:** See Section 01 5719.12 Noise and Exterior Lighting Management.

B. Existing Utilities

1. Existing Utilities: Notify NPS Project Manager and utility companies of proposed locations and times for excavation.
2. Contractor shall be responsible for locating and preventing damage to known utilities. If damage occurs, repair utility at no additional expense to the Government.
3. If damage occurs to an unknown utility, repair utility. An equitable adjustment will be made in accordance with the Changes clause of the contract.
4. Existing Utilities: USA Notification & Utility Field Meeting
   a. The Contractor shall contact Underground Service Alert (USA) (1-800-642-2444) seven (7) calendar days prior to start of each ground disturbing phase and shall be responsible for maintaining a valid USA location tag through renewal during the construction. The Contractor shall schedule a utility field meeting prior to any excavation. This shall be so stated in the USA notification. The Contractor shall be responsible to coordinate the utility field meeting at which time he shall explain the limits and impacts to USA member utilities.
   b. The majority of the utilities within Stinson Beach are owned by NPS. As such, very few utilities will actually be marked out by USA. It is the Contractor's responsibility to field locate & mark all utilities within the project work area, including NPS utilities. Field location and marking shall be performed a minimum of three (3) days prior to ground disturbance; notify NPS PM upon completion of field location and marking for NPS review and approval. No ground disturbance or trenching shall be performed prior to NPS approval.

5. Water and Wastewater Systems: The Contractor is not authorized to open/close valves, operate pumps and/or de-energize the water or waste water system; An NPS Utility Systems Repairer Operator (USRO) must do or be onsite to observe.
6. See Spec Section 01 73 40 3.2 “Execution” for utility marking and coordination with other utility providers.

C. Existing Utility Interruptions: Do not interrupt utilities serving facilities occupied by Government or others unless permitted under the following conditions and then only after arranging to provide temporary utility services according to requirements indicated:

1. Notify NPS Project Manager not less than two working days in advance of proposed utility interruptions.
2. Do not proceed with utility interruptions without NPS Project Manager’s written permission.
3. Hours for Utility Shutdowns: Minimize disruptions to the greatest extent possible, limit shutdowns to 4 hours maximum.

D. Smoking: Smoking is not permitted within the building or within 25 feet of entrances, operable windows, or outdoor air intakes. Designated smoking areas shall be approved by the NPS Project Manager.

1.9 FIELD VERIFICATION

A. See Section 01 7340 Execution.

1.10 SPECIAL CONSTRUCTION REQUIREMENTS

A. Hot Work Permit: A hot work permit is required for any cutting, welding or heat gun work. No open flame torch work will be allowed. The NPS Fire Inspection office will issue the permit to the Contractor. Permit will be good through completion of work. The Contractor will be responsible for ensuring that all workers and subcontractors follow permit conditions.

B. Protection of Natural Resources: The coastal zone of Stinson Beach is designated ESHA by the Coastal Zone Management Act and provides essential ecosystem services. Construction activities outside the limits of disturbance is prohibited. The Contractor shall closely follow the plans shown and alert the NPS Project Manager immediately of any major deviations. A start-up meeting with the NPS Project Manager will be required prior to beginning work.

1. Survey and document the existing dune/vegetation at the site prior to construction so replacement in kind can be done.
   a. See Section 01 32 33 “Photo Documentation” for image requirements
2. Contractor shall provide a plan to the NPS Project Manager for staging equipment and supplies and constructing the pile foundation at least 60 days prior to mobilization. Plan must be approved prior to beginning work.
3. Contractor shall provide a restoration plan for rehabilitating site where disturbed by construction activities. Restoration includes the dunes and vegetation.
4. Contractor shall provide a mitigation plan for the areas identified on the plans.
5. Reference Section 01 34 00 “Natural Habitat Requirements” for additional information.

C. Contractor to provide all third-party inspections and reporting. Contractor to submit inspection reports and test results to the NPS Project Manager.

D. Contractor is not responsible for building department or third-party inspections by Agencies not having jurisdiction.

E. Unforeseen circumstances or closures mandated by the Federal Government: the Park is closed.

1.11 STORM WATER POLLUTION PREVENTION PLAN

A. Submit an Under an Acre Pollution Prevention Plan (UPPP)] for each Contract with ground disturbing activities prior to performing any ground disturbing activity. Prepare the UPPP in conformance with Section 01 5723 "Temporary Stormwater Pollution Prevention."

B. Implement all appropriate requirements of the UPPP.

PART 2 - (Not Used)

PART 3 - EXECUTION (Not Used)

END OF SECTION 01 1100

SECTION 01 26 01 CONTRACT MODIFICATION PROCEDURES

PART 1 - GENERAL

1.1 SUMMARY

A. The work of this section consists of administrative and procedural requirements for contract modifications.

1.2 DEFINITIONS AND ALLOWANCES

A. Home Office Overhead: Those costs incurred in support of all of a contractor's projects and not attributable to a specific job. The cost for home office overhead is only allowed as a percentage of all direct work excluding profit. The following items represent allowable home office overhead costs identified in Part 31 of the Federal Acquisition Regulation (FAR):

1. Rent
2. Utilities
3. Furnishings
4. Office equipment
5. Executive and management staff not exclusively assigned to the project
6. Support, accounting, and administrative staff
7. Preparation of cost proposals, estimating, and schedule analyses connected with Modifications
8. Estimating and preconstruction services
9. Mortgage costs
10. Real estate and corporate taxes
11. Automobile maintenance and travel costs for home office personnel
12. Home office insurances i.e. structure, automotive, umbrella, flood, etc.
13. Depreciation of equipment and other assets
14. Home office supplies (paper, staples, etc.)
15. Legal services
16. Accounting and data processing
17. Professional fees/registration

B. General Conditions (Field Office Overhead): Management and administrative costs incurred on site for the designated project. Costs associated with the preparation of modifications will not be allowed. The costs for these items are to be included only in the general conditions of the modification estimate. Only in the case of a contract time extension are additional general conditions included in modifications. The following items, if applicable, are considered allowable costs for calculating General Conditions:

1. Project Manager, Assistant Project Manager

2. Superintendent, Assistant Superintendent
3. Quality Control, Safety Officer, Environmental Manager, etc.
4. Engineers
5. Travel, lodging, and per diem (as established by Federal Travel Regulations)
6. Scheduling
7. Field Office Trailers and associated temporary utilities
8. Field office supplies

    a. Mailing and couriers
    b. Reproduction costs
    c. Storage
    d. Phones
    e. Computers
    f. Copiers

9. Personal vehicles i.e. Superintendent Pickup trucks

C. General Requirements: These are costs directly associated with the project and are necessary to perform the actual work of the modification. These costs shall be shown as direct costs in the estimate. The following items, if applicable, are considered allowable costs for calculating General Requirements:

1. Hoisting
2. Material handling
3. Temporary fencing
4. Port-a-lets
5. Trash removal, dumpsters
6. Barricades
7. Small tools
8. Safety supplies
9. Scaffolding
10. Daily cleaning
11. Traffic control
12. Temporary signage
13. Temporary heating and power

D. Personnel Costs: Costs included in the modification must only be for General Conditions staff and workers actually present and working on the project site. Modification costs for salaried workers are only allowed within the structure of a 40 hour week and no overtime or holiday pay will be allowed.

1. Worker Hourly Rates are costs directly associated with the individual worker and consist of the following:

    a. Base Rate: This is the hourly rate paid directly to the worker

b. Labor Burden: Employer payments of all applicable burdens, this includes insurance and taxes that the business must pay on behalf of the worker to government entities and educational forums, such as:

1) Social Security
2) Medicare
3) Workers Compensation– Policy and company calculation to be made available.
4) FUTA– Cap Rate and percentage to be proportionally allocated over one year.
5) SUTA– Cap Rate and percentage to be proportionally allocated over one year.
6) Union agreement costs – Other costs required under an enforceable collective bargaining agreement.

c. Fringe Benefits: Various non-wage compensations provided to employees such as:

1) Health Care Insurance Premiums
2) Cell Phone
3) Clothing
4) 401K and Pensions
5) Vehicle allowances
6) Gas allowance
7) Life insurance premiums
8) Disability insurance
9) Other Fringe Benefits required under an enforceable collective bargaining agreement

E. Bonuses or Deferred Compensation: No Bonus or Deferred Compensation will be allowed within any components of pricing including Home Office Overhead, General Conditions, General Requirements, Hourly Worker Rates, or the direct costs of work.

F. General Liability Insurance: An insurance policy that protects the contractor from claims resulting from bodily injury or property damage to a third party. Include this as a separate line item within all modification proposals and provide a current insurance quote upon request.

G. Performance and Payment Bonds: A performance bond is a surety bond issued by an insurance company or bank to guarantee satisfactory completion of a project. The Payment Bond guarantees that the contractor will pay the labor and material costs they have incurred. Banks and Insurance companies charge a premium for each individual project based on a sliding scale which relates to the size of the project. Include this as a separate line item in modification proposals and provide current company bonding rates upon request.

H. Builder's Risk Insurance: This covers the contractor's loss due to fire, high winds, or other natural forces. This is not reimbursed by the National Park Service (NPS) and shall not be included in modification proposals.

1.3 MODIFICATION PROPOSAL PRICING REQUIREMENTS

A. General:

1. Your proposal must be received in the format and within the time frame specified in the Request for Proposal letter. Costs or delays resulting from failure of contractor to submit within the time frame specified will not be compensable. The proposal must be

detailed with itemized lists of equipment, materials, labor, production rates, overhead, profit, and bond markup for each item. Labor costs must be itemized by craft and hourly rate, including Fringe Benefits and Labor Burden. If the costs of Fringe Benefits and Labor Burden are not itemized, it is assumed that that they are included in the hourly rate shown, or contractor is not requesting reimbursement. Contractor may utilize the government provided Contractor Estimate Form, or their own form, provided that it contains the same information and level of detail as the Gov't provided form. The government form is available at:

http://www.nps.gov/dscw/upload/ContractorEstimateForm_1-24-13.xls

2. Requests for extensions of contract time as a result of this change must be justified with a Time Impact Analysis (TIA). TIA and associated costs must be received with the proposal by the date shown within the Request for Proposal letter. Contractor's failure to submit within the specified time frame will be construed as the Contractor waiving the right for additional time and no time extension will be allowed.
3. All supporting documentation used to justify the proposed modification will be made available to the Contracting Officer upon request.
4. Contractor must review and approve all subcontractor/supplier pricing in detail for proper format, scope, production rates, and pricing prior to submission to the NPS. All delay costs associated with not reviewing and approving subcontractor/supplier pricing will be borne by the Contractor.
5. All pricing and production rates within the estimate must be based on fair and reasonable pricing and cannot include built-in contingency.

B. Labor:

1. Contractor shall estimate the cost of labor by itemizing each craft involved, indicating worker hourly rate (base rate + labor burden + fringe benefits) for each and itemizing the hours required for each craft that will be directly engaged in modification work. Any work proposed that will require overtime work or premium pay shall be itemized separately. All rates shall be in accordance with the Davis-Bacon Act as incorporated herein. Labor Burden may include payroll taxes, Social Security, unemployment insurances, workers compensation insurance, FICA, FUTA, and other direct costs resulting from Federal, State or local laws.
2. Itemize labor costs for equipment operators separate from equipment costs.
3. The labor cost for foremen shall only be costs for related work required for the modification.

C. Materials:

1. The estimated cost for materials shall include quotes from multiple sources. Material prices must include all applicable fees and credits, including but not limited to, sales tax, freight and delivery charges, and tax rebates.
2. No markup shall be applied to any material provided by the NPS.

D. Equipment:

1. Equipment used for the project must be appropriately sized for the work being performed.

2. Do not include costs for "miscellaneous tools and equipment", in your proposal for a replacement value of $500 or less. Costs shown in excess of $500 must be broken out separately.
3. Regardless of ownership, the rates to be used in determining equipment rental costs shall be the lowest cost from one of the following sources:

   a. U.S. Army Corps of Engineers, Ownership and Operating Expense Schedule (use latest edition and applicable region)
   b. Construction Blue Book
   c. Local equipment rental rates, documented by actual invoice charges, or itemized vendor quotes.

4. The estimated rental rates shall include the cost of all fuel, oil, lubrication, supplies, small tools, necessary attachments, ground engaging components, tires & tracks, routine repairs and maintenance (cost of major overhaul is not included), depreciation, storage, insurance, and all incidentals. Mobilization, if applicable, may be included for equipment solely used on the modification work but must be listed separately.
5. Estimate the full rate for equipment only for the duration that the equipment will be utilized to accomplish the work of the modification.
6. Standby unit rates used are to be in accordance with paragraph 1.3, D, 2, above. If the US Army Corp of Engineers is utilized, then their standby rates prevail. If Bluebook or local equipment pricing is accepted, then ½ of the equipment costs minus any operating costs will be accepted.
7. If equipment is in standby mode due solely to a documented NPS delay, the established standby rate shall apply from the first day of the delay.
8. Equipment that is not used and on the jobsite for up to five consecutive days may be classified at standby rates, provided that the equipment is or has been used solely to perform work on the modification and will be necessary to complete additional modification work. Equipment that is still on the jobsite but not in use after five consecutive days will not be considered in the modification pricing.
9. Requests for compensation for equipment stand by time must be justified, documented and itemized separately.
10. The estimated timeframe (daily, weekly, monthly) for use of the equipment must reflect the lowest cost to the Government.

E. Establishment and Application of Overhead and Profit Percentages:

1. Home Office Overhead and Profit (OH&P) shall be applied to direct costs only. Profit shall not be applied to overhead amounts; and overhead shall not be applied to profit. Home office overhead shall contain only allowable, allocable, and reasonable costs per the contract documents and FAR Part 31. Profit percentages are based on risk factors found in FAR Part 31which have been applied to the specific type of work included in this project. The following percentages establish the maximum allowable markups (OH&P) for contractor self-performed work:

   Overhead……10%
   Profit……..……8%

2. Total aggregate limit of markup (OH&P) for contractor and subcontractors on modification work shall not exceed 25%. The NPS will not be responsible for allocation of percentages between contractor and subcontractors at any tier.
3. If contractors form a partnership, then the partnership may only receive home office overhead and profit in the same amount as an individual contractor (refer to par 1.3.E.1 above). It is the responsibility of the partners to decide on the division of revenue.
4. Combined Increases and Decreases: On proposals involving both increases and decreases in the Contract Price, the overhead and profit mark-ups are required on the net increases and deducted on net decreases.
5. At no time can profit be calculated on Overhead or itself, it must be calculated on direct costs of work only.

PART 2 - PRODUCTS (Not used)

PART 3 - EXECUTION (Not used)

END OF SECTION 012601

SECTION 01 2700 - DEFINITION OF CONTRACT LINE ITEMS

PART 1 - GENERAL

1.1 SUMMARY

A. The intent of this section is to explain, in general, what is and what is not included in a contract line item, and the limits or cut-off points where one item ends and another begins. Items will match the bid schedule Sec. 01_01_01 and serve to assist bidders in breakout pricing of scopes.

B. This list does not alleviate or relieve the contractor from supplying or installing the complete structure as per the construction documents. If no contract line item exists for a portion of the work, include the costs in a related item.

PART 2 - PRODUCTS (Not Used)

PART 3 - EXECUTION

3.1 LIST OF CONTRACT LINE ITEMS

A. Contract Line Item No.1 – Base Bid Core and Shell (Kitchen, Tower & Garage)

B. This Line item consists of but is not necessarily limited to:

1.1) Pre-Construction Submittals for NPS approval: UPPP, Construction Schedule, Site Specific Safety Plan, Site Management Plan, Waste Management Plan, Natural Resource Protection Plan., Visitor/Pedestrian Control Plan, Material and Product Submittals, Shop Drawings, Inspections, Schedule of Values.

1.2) Testing & Mock-ups: Third party window field testing under negative pressure as per construction documents. Incudes on-site mock-up construction of siding, windows, trim and other selected assemblies called out in the project specifications.

1.3) Mobilization: Equipment and personnel required for initiating, commencing and supporting activity onsite. Signage, material and tool storage, traffic management, transport permits, waste management, project management.

1.4) Visitor Protection: Installation and maintenance of boundary exclusion fences, pedestrian and visitor management and safety measures.

1.5) Natural Resource protection: Includes implementation and management of Under an Acre Pollution Prevention Plan (UPPP). Includes all work described on Plan Sheets L1.0 & L3.1, removal and salvage of vegetation, transportation and storage for reuse, temporary barriers and protective measures as additionally described in the construction

documents as Site Restoration efforts. Install salvaged plants and soils/sand stabilization measures, remove exclusion fencing, install protective fencing, perform one year monitoring and maintenance of designated restoration zones.

NIC: Work additionally described in the construction documents known as and shown on Plan Sheet L3.3 titled Site Mitigation Plan.

1.6) Utility Marking as per specification section 01 73 40. The majority of utilities within Stinson Beach are owned by NPS. As such, very few utilities will actually be marked by USA. It is the Contractor's responsibility to field locate and mark all utilities within the project area. Includes permanent disconnects, capping and removal as directed by the NPS.

1.7) Hazardous Building Materials Handling: Perform removal and disposal of all Hazardous Building Materials and Contaminated Soils. Provide Hazardous Building Materials work plan for sample collection, testing & provide summary report. Provide Hazardous materials work plan for building demolition, excavations, handling and disposal. Manage entire process, includes waste manifests, coordination with NPS Environmental Programs Representative, landfills and required State, Local or other agencies to ensure compliance, and provide close out reports. Refer Abatement specifications, Sections 02 8214 and 01 8313.

1.8) Survey: Provide pre-demolition topographic survey to confirm existing building footprint and elevations. Provide layout for new structure footprint and elevations, exterior grading, walkways and paving and all hardscape elevations according to construction documents. Survey and provide as built documentation for building perimeter and all newly installed utility locations. Vertical and horizontal references required.

1.9) Demolition & Disposal: Remove, transport and legally dispose of entire existing building and contents, embedded wooden and concrete piers, concrete walls, retaining walls, concrete slabs, driveway aprons. Includes abandoned utilities, conductors, manholes and vaults as per construction documents. Re-grade and prepare site with correct exterior earth elevations for new structure and hardscapes. This is separate scope from building materials containing hazardous materials.

1.10) Not Used

1.11) Provide shop drawings, provide and install Concrete Pilings for support of Concrete Grade Beams & Slab on Grade: Scope includes Kitchen, Tower and Garage.

1.12) Provide Shop Drawings for: Reinforcing Steel, HD's, AB's & Column Base Plates, Grade Beams, Slabs, Curbs, Ramps, Walkways. Scope includes Kitchen, Tower, Garage and Transformer Pads.

1.13) Provide and install forms for Concrete footings, Grade beams and floor slabs, scope includes Kitchen, Tower & Garage

1.14) Provide and install Reinforcing Steel in Grade Beams as per Construction Documents, approved Shop Drawings and Product Submittals.Scope includes Kitchen, Tower and Garage.

1.15) Supply Plumbing System Shop Drawings (entire project): Install as per Construction Documents, approved Shop Drawings and Product Submittals, Waste and Supply plumbing through and under slab, stub outs for future tie ins to POC location in driveway apron. Scope includes Kitchen, Tower and Garage.

1.16) Supply Building Electric, Alarm, & Communications Systems Shop Drawings (entire project): Install required Electrical & Communications conduits through and under slab, stub out for future tie ins to POC location in Driveway Apron. Scope includes Kitchen, Tower and Garage

1.17) Provide and install: Insulation, Vapor Barrier, Slab Reinforcing Steel, includes Hold Downs, Anchor Bolts and all embedded components for foundation of Kitchen, Tower and Garage.

1.18) Provide and install: Poured in Place Concrete; Grade Beams, Concrete Slabs. Finish Slabs, strip forms; Kitchen, Tower & Garage

1.19) Provide & install Poured in place concrete Transformer Pad: Saw cut asphalt, excavate, trench, test for contaminates and off haul spoils, install forms, install pad as per Construction Documents, approved Shop Drawings and Product Submittals, includes embedments for equipment mounting, conduit stub outs, sweeps and compacted backfill. Install reinforcing steel, manage & coordinate PG&E equipment installation & inspections. Pour & finish concrete, strip forms.

1.20) Provide and install: Site Electrical and Communications conduits: Install as per Construction Documents, approved Shop Drawings and Product Submittals, from pole located at north side of parking lot to transformer pad, from transformer pad to POC in driveway apron. From new transformer pad to existing transformer pad. Cut asphalt, trench, test for contaminates and off-haul spoils. Install bedding, conduits, manage and coordinate PG&E equipment installation, power shut offs, inspections, restore any disturbed planted areas. Backfill at trenches in parking lot, driveway and transformer pad. Intent of CLIN is to complete all underground conduits from point of entry of utility or system provider to stub out through building slab, ready for rough in phase and conductor installation after building is framed and closed in.

1.21) Provide and install: Install Domestic Water Supply: Excavate, trench and backfill as required. Install as per Construction Documents, approved Shop Drawings and Product Submittals, new water meters, meter & valve boxes, connect new supply lines to rough in supply stub outs to Tower and Kitchen from under slab stub out from Tower. Install new Wharf Riser, bollards, isolation valve, connect to new supply service, connect new water supply lines to existing water supply located in driveway as per plans.

1.22) Provide and install: New Sewer Waste Lines: Install as per Construction Documents, approved Shop Drawings and Product Submittals, install new Grease Interceptor in driveway apron. Connect Interceptor to waste line stub out from under slab leading to kitchen. Construct new manhole assembly in driveway apron. Connect Grease interceptor and new sewer line from under slab to new manhole assembly. Re-use existing clean out box and set to new elevation as per construction documents. Install new waste line from manhole to existing cleanout in re-installed box to connect to existing sewer lateral in new driveway apron.

1.23) Concrete Paving: Sawcut Asphalt driveway as required, excavate, test for contaminates and off-haul spoils to provide and install new concrete entrance transition from driveway to wooden accessible ramp, provide and install new concrete driveway aprons and all concrete walkways surrounding building as per construction documents. Scope of work includes North Sidewalk between top of wooden walkway, deck, stairs to the beach and the top of the wooden accessible ramp.

1.24) Asphalt Paving: Sawcut Asphalt Driveway as required, depending on location and elevation, determine if fill is required and install, or excavate as needed, test for contaminates and off-haul spoils to install new Asphalt driveway apron, patch utility trenching in existing driveway, patch existing asphalt accessible path of travel in parking lot, patch trenching from Transformer pad in parking lot to new service entrance on pole and edges of new transformer pad.

1.25) Tower Lantern: Supply Shop Drawings, fabricate and install as per Construction Documents, approved Shop Drawings and Product Submittals, Structural Steel Frame, Columns, horizontal & vertical connections, includes High Roof Structural Steel, Special Painting & Coatings, Ventilation assemblies, Doors, Glazing assemblies, Weatherstripping and associated Trim.

1.26) Frame Walls, Roof and Sheath Exterior: Construct wood frame exterior and interior walls, partitions, floors, eyebrow roof, stairs from 1st floor to second floor, Garage, Kitchen, Tower and Eyebrow roof. Install sheathing on subfloor, exterior walls, roof, interior shear walls. Install blocking for mechanical devices, blocking for the "lantern", railings, shade sail, eyebrow over serving window, electric fixtures, plumbing fixtures, siding and trim as required, cabinets and bathroom accessories. The intent of this description is to achieve a completed framed structure, ready for roofing, parapet caps, window and door installation and siding, with backing or blocking for all interior or exterior accessories and installation of MEP systems.

1.27) OSHA Compliant Scaffolding as required to access and install exterior sheathing, windows, siding or any other element of the project.

1.28) Supply Shop Drawings, fabricate, and install perimeter stainless steel guard railing on lantern observation deck.

1.29) Roof Penetrations: Provide fabrication and installation shop drawings, provide and install as per Construction Documents, approved Shop Drawings, mock-ups and Product Submittals; Parapet caps, roof to wall flashings, roof jacks for plumbing, electric and mechanical penetrations, mechanical equipment curbs, sleepers and scuppers.

1.30) Install Roof Membranes: Provide fabrication and installation shop drawings, install as per Construction Documents, approved Shop Drawings, mock-ups and Product Submittals; Lantern & Observation deck membranes, Kitchen, Garage and Eyebrow roof membranes.

1.31) Exterior Doors and Hardware: Provide fabrication and installation shop drawings, install as per Construction Documents, approved Shop Drawings, mock-ups and Product Submittals. Provide and install Exterior doors with thresholds, weather strip, exterior

trim and operating hardware; Kitchen, Tower and Garage. Overhead door at Garage not included.

1.32) Exterior Windows: Provide fabrication and installation shop drawings, install as per Construction Documents, approved Shop Drawings, mock-ups and Product Submittals. Includes all exterior windows, exterior trim, flashings and associated operational hardware; Kitchen, Tower and Garage.

1.33) Install Roll-up Doors: Provide fabrication and installation shop drawings, provide and install as per Construction Documents, approved Shop Drawings and Product Submittals, Includes hardware, operators, exterior trim, flashing and roll up doors in Garage.

1.34) Exterior Siding: Provide and install T&G Redwood siding and exterior trim as per construction documents, Provide shop drawings and mock-ups. Includes moisture barriers, self-adhering membranes, drainage and ventilation accessories, flashings to integrate with Garage, Kitchen and Lantern roof membranes, windows and doors. Includes Lantern decking, railing caps, corner boards. Includes sleeves for exterior plumbing, electrical and any other exterior wall penetrations. Kitchen, Tower and Garage. Intent of CLIN 1.34 is to achieve 100% weathertight exterior building envelope to allow for installation of items as described in CLIN 2 breakouts.

1.35) Exterior Paint: Install stain and/or paint as per contract documents on Siding, Trim, Jambs, Doors, Decking, Lantern, Wooden Guard Rails, Stairs.

No separate measurement will be made.
Payment will be made at the contract lump sum price.

C. Contract Line Item No.2 – Interior Base Bid (NIC Kitchen)

1. This Line Item consists of, but is not limited to:

2.1) Rough-in Heating and Ventilation: Install as per Construction Documents, approved Shop Drawings and Product Submittals, heating supply ductwork, exhaust ductwork, fans and control wiring in Tower and Garage as per construction documents. Scope intended to include all necessary components to allow for drywall installation in Tower and Garage.

2.2) Rough-in Plumbing: Install as per Construction Documents, approved Shop Drawings and Product Submittals, waste lines and domestic water supplies as per construction documents. Scope intended to include all necessary components to allow for drywall installation in Tower and Garage.

2.3) Rough in Electrical: Install as per Construction Documents, approved Shop Drawings and Product Submittals, conduit, boxes and conductors for power, communications and alarms. Includes connection to any exterior lighting, including exterior boxes in Tower, Garage and Kitchen previously mounted for siding penetrations. Scope intended to include all necessary components to allow for drywall installation in Tower and Garage.

2.4) Insulation: Provide and install insulation as per Construction Documents, includes common walls between Kitchen and Tower/Garage, along grid lines D &7.

2.5) Install Drywall and Tape: All walls & ceilings Tower and Garage, level 5 finish. Fire tape only in Garage, Showers 110,112 &113.

2.6) Circular Stair: Supply Shop Drawings, Fabricate and install aluminum Circular Stair and Custom Guardrail from 2nd floor to 3rd floor as per construction Documents.

2.7) Interior Stair Railing: Supply Shop Drawings, Fabricate & Install custom railing on stairway from 1st floor to second floor as per construction documents.

2.8) Interior Doors, Base, Casing & Hardware: Install interior doors with jambs, casings and finish hardware, rubber or epoxy floors & base, treads & skirtboards on stairs from 1st floor to second floor, railing trim, window casings, all interior finish woodwork, hardware & trim. Shower 110, 112 &113 will have interior doors, trim on one side of the jamb, door hardware installed but no interior finish work is included except fire tape gypsum wall finish.

2.9) Not Used

2.10) Casework, Counter Tops, Cabinets and Hardware: Supply shop drawings and product submittals for all areas, including Kitchen, Rest Room 105, Shower Rooms 110, 112 & 113. Fabricate & install as per Construction Documents, approved Shop Drawings and Product Submittals; cabinets and casework, cabinet hardware, foot rail, countertops, bath accessories, mirrors & shower accessories, EXCEPT Rooms 110, 112, & 113, Kitchen and Rest Room 105 which are considered NIC installations for this CLIN. (See bid option A)

2.11) Interior Painting: Paint interior doors, jambs, casings, baseboards, stairway woodwork, windows, all interior wood Trim. Includes cabinets, interior drywall. NIC Shower 110, 112 &113.

2.12) Finish Mechanical: Install per approved product submittals and construction documents, Controls, Louvers, Registers, Trims for exhaust fans, NIC Shower 110, 112 & 113.

2.13) Finish Plumbing: Install per approved product submittals and construction documents, sinks, shower heads, faucets, water closets, water heater, floor drain trims, washing machine stops, includes all exterior hose bibbs. Intent is to provide fully functioning systems, including all fixtures and trims for the Tower and Garage, NIC baths 110, 112 & 113.

2.14) Finish Electrical: Install as per approved product submittals and construction documents, heaters, lighting fixtures, receptacles & switches, Final communication devices, fire alarm components and panels, Intrusion alarm system. Intent is to provide fully functioning systems, including all fixtures and trims for the Tower and Garage, NIC baths 110, 112 & 113.

2.15 De-Mobilization: Prepare site for occupancy, submit close out documentation, site clean-up. Remove equipment, tools, site protections.

2. No separate measurement will be made.
3. Payment will be made at the contract lump sum price.

D. Contract Line Item No. 3 – Wood Patio Deck, Stairs & ABAAS Ramp

1. This item consists of, but not necessarily is limited to:

   3.1) Wooden Pilings: Pneumatically installed to support the accessible wood ramp, patio deck, canopy, retaining walls and stairs leading to the beach.

   3.2) Pedestrian Path: Install girders, joists, specified hardware, wood decking and guard rail assembly between concrete transition ramp from Driveway and Concrete Pedestrian path to patio deck.

   3.3) Patio Deck & Stairs: Install girders, joists, specified hardware, wood decking, guard rail assembly between columns, stairs to beach with rail assembly.

   3.4 Wood Retaining walls: As per civil, landscape and structural plans, includes horizontal wood members, drainage pipe, accessories and drain rock.

   3.5) Finish Grading, Misc. Sitework: Temporary Shoring, Final Fine Grading of site, Bollards, Site Furnishings, Signage, Trash Receptacles

No separate measurement will be made.
Payment will be made at the contract lump sum price

E. Contract Line Item No.4 – <u>Bid Option A</u> (Shower 110, 112 & 113)

1. This item consists of following but is not necessarily limited to:

   Delete: drywall fire tape level finish. Add: level 5 finish, fabricate & install cabinets, casework, and shower units, Install epoxy flooring, cabinet hardware, countertops, mirrors, interior wood trim, bath accessories, plumbing fixtures, electric fixtures, shower curtains & paint. The intent of this CLIN is to achieve a complete and finished installation of Shower rooms 110, 112, and 113 per construction documents, shop drawings and approved product submittals.

2. No separate measurement will be made.
3. Payment will be made at the contract lump sum price.

F. Contract Line Item No.5 – <u>Bid Option B</u> (Tower Flooring)

1. This item consists of:

   Finish Flooring and specified base in rooms 106, 108, 100, 111, 114, 201 & 301.

2. No separate measurement will be made.
3. Payment will be made at the contract lump sum price.

G. Contract Line Item No. 6 – Bid Option C (Garage Hoist)

1. This item consists of:

   Supply and installation of Electric Equipment Hoist in Garage Ceiling.

2. No separate measurement shall be made.
3. Payment will be made at the contract lump sum price.

H. Contract Line Item #7 – <u>Bid Option D</u> (Kitchen)

1. This item consists of the following but is not necessarily limited to:

   7.1) Rough-in Plumbing: Install Waste & Supply plumbing as per Construction Documents, approved product submittals and Shop Drawings in Kitchen 102, Hall 103, Janitors Closet, Bath105 & Storage 108. Scope intended to include all necessary components to allow for drywall installation.

   7.2) Rough in Electrical System: Install as per Construction Documents, approved product submittals and Shop Drawings in Kitchen 102, Hall 103, Janitors Closet, Bath105 & Storage 108. Includes supply connection to all exterior lighting boxes installed previously. Includes supplies to roof mounted mechanical equipment. Scope intended to include all necessary components to allow for drywall installation.

   7.3) Rough in Communication, Fire & Intrusion Alarm Systems: Install as per Construction Documents and approved Shop Drawings in Kitchen 102, Hall 103, Janitors Closet, Bath105 & Storage 108. Scope intended to include all necessary components to allow for drywall installation.

   7.4) Install Insulation, Drywall and Tape: All walls & ceilings per Construction Documents and approved product submittals in Kitchen 102, Hall 103, Janitors Closet, Walk-in Cooler, Rest Room 105 & Storage 108, in level 5 finish. Fire tape only in Walk-in Cooler. Includes installing dropped ceilings in Kitchen, Rest Room105 and Janitors Closet.

   7.5) Interior Doors, Casing and Wood Trim: As per Construction Documents, shop drawings and approved product submittals, provide and install interior doors jambs, stops, door hardware. Includes finish carpentry to install door trims, window trims, pass thru cabinetry and casework, serving window trims and counter tops, wood trims around mechanical penetrations in walls and ceilings. All interior wood trims cabinetry and case work in the Kitchen 102, Hall 103, Janitors Closet, Restroom 105 & Storage 108.

   7.6) Walk-in Cooler: Install as per Construction Documents, approved product submittals and Shop Drawings, Scope intended to install complete operational package integrated into the interior finishes, inclusive of MEP systems rough in and finish components, to turn over to the concessionaire at the completion of the project prior to their occupancy.

   7.7) Hood, Roof Ductwork, Exhaust Fans: Install as per Construction Documents, approved product submittals and Shop Drawings. Includes Kitchen Hood, Ansul Fire suppression system, Filters, roof mounted duct work and dedicated Exhaust Fan, Make-up air, bathroom and janitors closet fans & duct work.

7.8) Final Plumbing: Install as per construction Documents and approved product submittals, angle stops or other appropriate connection device or terminal for all future concessionaire supplied appliances, faucets and sinks in the kitchen area. Install trims for floor sinks. Install all finished fixtures, water closet, sink, faucet, all devices and trims in Bath 105 and Janitors Closet, water heater, mop sink, faucet.

7.9) Final Electrical: Install as per approved product submittals and construction documents, heaters, lighting fixtures, receptacles & switches, Final communication devices, fire alarm components and panels, Intrusion alarm system. Includes installation of Air Curtains and terminals for connection points for all kitchen appliances supplied and to be installed by concessionaire in the future.

7.10) Interior Finish Painting and Flooring: Paint as per approved product submittals and construction documents, walls & ceilings, interior doors, jambs, casings, base, window trims, closet shelves or other woodwork, all interior wood trim in Restroom 105 and Janitors Closet. Install as per approved product submittals and construction documents, epoxy flooring and integral coved base, Kitchen, Hall 103, Janitors Closet & Rest Room 105.

No separate measurement will be made.

Payment will be at the lump sum price.

I. Contract Line Item #8- <u>Bid Option E</u>: (Shade Sails)

This item consists of the following but is not necessarily limited to:

Provide Shop Drawings and install as per approved product submittals and construction documents, fabric shades over the patio area. Includes hardware and attachment to vertical posts and building walls.

No Separate measurement will be made

Payment will be at lump sum price

J. Contract Line Item #9- <u>Bid Option F</u>: (Lightning Protection)

1. This item consists of: Design Build Lightning Strike protection as per industry standards, project construction documents. Provide shop drawings for approval and install complete system.
2. No Separate measurement will be made.
3. Payment will be at lump sum price.

~~K.~~ Contract Line item #10- <u>Bid Option G</u>: Not Used

L. Contract Line item #11- <u>Bid Option H</u>: (Exterior Handrail)

1. This item consists of substituting 316SS for HD galvanized metal pipe at the accessible ramp railings.
2. No Separate measurement will be made.
3. Payment will be at lump sum price.

M. Contract Line item #12- <u>Bid Option I (Eye)</u> : (Wharf Hydrant POC)

1. This item consists of replacing 350LF of existing 3” metal pipe with new 4” PVC pipe at existing asphalt drive. Scope includes patching asphalt.
2. No Separate measurement will be made.
3. Payment will be at lump sum price.

END OF SECTION

SECTION 01 3100 - PROJECT MANAGEMENT AND COORDINATION

PART 1 - GENERAL

1.1 SUMMARY

A. This Section includes administrative provisions for coordinating construction operations on Project including, but not limited to, the following:

1. Construction Coordination.
2. Submittals
3. Coordination Drawings.
4. Requests for Information (RFIs).
5. Project meetings.
6. Environmental Coordination.
7. Permits

B. Related Requirements:

1. Section 01 32 16 “Construction Schedule” for preparing and submitting Contractor’s construction schedule.
2. Section 01 73 40 “Execution” for procedures for coordinating general installation and field-engineering services, including establishment of benchmarks and control points.
3. Section 01 77 00 “Closeout Procedures” for coordinating closeout of the Contract.
4. Section 01 91 14 “Total Building Commissioning” for coordinating the work with Owner’s Commissioning Authority.

1.2 CONSTRUCTION COORDINATION

A. Coordination: Coordinate construction operations included in different Sections of the Specifications to ensure efficient and orderly installation of each part of the Work. Coordinate construction operations, included in different Sections, which depend on each other for proper installation, connection, and operation.

1. Schedule construction operations in sequence required to obtain the best results where installation of one part of the Work depends on installation of other components, before or after its own installation.
2. Coordinate installation of different components with other Contractors to ensure maximum accessibility for required maintenance, service, and repair.
3. Make adequate provisions to accommodate items scheduled for later installation.
4. Where availability of space is limited, coordinate installation of different components to ensure maximum performance and accessibility for required maintenance, service, and repair of all components, including mechanical and electrical.

5. Properly plan construction operations to include permit requirements. Allow enough time to execute permit provisions to maintain work schedule, site visits, inspections, and reporting deadlines.

Prepare memoranda for distribution to each party involved, outlining special procedures required for coordination. Include such items as required notices, reports, and list of attendees at meetings.

B. Administrative Procedures: Coordinate scheduling and timing of required administrative procedures with other construction activities and activities of other contractors to avoid conflicts and to ensure orderly progress of the Work. Such administrative activities include, but are not limited to, the following:

C.

1. Preparation of Contractor's Construction Schedule.
2. Preparation of the Schedule of Values.
3. Installation and removal of temporary facilities and controls.
4. Delivery and processing of submittals.
5. Progress meetings.
6. Permit requirements.
7. Pre-installation conferences.
8. Project closeout activities.
9. Commissioning activities.

1.3 SUBMITTALS

A. Coordination Drawings: Prepare Coordination Drawings if limited space availability necessitates maximum utilization of space for efficient installation of different components, or if coordination is required for installation of products and materials fabricated by separate entities.

1. Content: Project-specific information, drawn accurately to scale. Do not base Coordination Drawings on reproductions of the Contract Documents or standard printed data. Include the following information, as applicable:
   a. Indicate functional and spatial relationships of components of architectural, structural, civil, mechanical, and electrical systems.
   b. Indicate dimensions shown on the Contract Drawings and make specific note of dimensions that appear to be in conflict with submitted equipment and minimum clearance requirements. Provide alternate sketches to the Contracting Officer (CO) for resolution of such conflicts.
   c. Indicate space requirements for routine maintenance and for anticipated replacement of components during the life of the installation.
   d. Show location and size of access doors required for access to concealed dampers, valves, and other controls.
2. Indicate required installation sequences. Sheet Size: At least 8-1/2 by 11 inches (215 by 280mm) but no larger than 22 by 34 inches (560 by 865mm).
3. Number of Copies: Submit two (2) electronic copies for each submittal, one in PDF format and one in original digital data format.. Contracting Officer will provide response in PDF format.
4. Refer to individual Sections for Coordination Drawing requirements for Work in those Sections.

B. Coordination Drawing Organization: Organize coordination drawings as follows:

1. Floor Plans and Reflected Ceiling Plans: Show architectural and structural elements, and mechanical, plumbing, fire-protection, fire-alarm, and electrical Work. Show locations of visible ceiling-mounted devices relative to acoustical ceiling grid. Supplement plan drawings with section drawings where required to adequately represent the Work.
2. Plenum Space: Indicate subframing for support of ceiling and wall systems, mechanical and electrical equipment, and related Work. Locate components within ceiling plenum to accommodate layout of light fixtures indicated on Drawings. Indicate areas of conflict between light fixtures and other components.
3. Mechanical Rooms: Provide coordination drawings for mechanical rooms showing plans and elevations of mechanical, plumbing, fire-protection, fire-alarm, and electrical equipment.
4. Structural Penetrations: Indicate penetrations and openings required for all disciplines.
5. Slab Edge and Embedded Items: Indicate slab edge locations and sizes and locations of embedded items for metal fabrications, sleeves, anchor bolts, bearing plates, angles, door floor closers, slab depressions for floor finishes, curbs and housekeeping pads, and similar items.
6. Mechanical and Plumbing Work: Show the following:
   a. Sizes and bottom elevations of ductwork, piping, and conduit runs, including insulation, bracing, flanges, and support systems.
   b. Dimensions of major components, such as dampers, valves, diffusers, access doors, cleanouts and electrical distribution equipment.
   c. Fire-rated enclosures around ductwork.
7. Electrical Work: Show the following:
   a. Runs of vertical and horizontal conduit 1-1/4 inches (32 mm) in diameter and larger.
   b. Light fixture, exit light, emergency battery pack, smoke detector, and other fire-alarm locations.
   c. Panel board, switch board, switchgear, transformer, busway, generator, and motor control center locations.
   d. Location of pull boxes and junction boxes, dimensioned from column center lines.
8. Fire-Protection System: Show the following:

   a. Locations of standpipes, mains piping, branch lines, pipe drops, and sprinkler heads.

9. Review: Contracting Officer (CO) will review coordination drawings to confirm that the Work is being coordinated, but not for the details of the coordination, which are Contractor's responsibility. If CO determines that coordination drawings are not being prepared in sufficient scope or detail, or are otherwise deficient, CO will so inform Contractor, who shall make changes as directed and resubmit.
10. Coordination Drawing Submittals: Prepare coordination drawing submittals according to requirements in Section 01 33 23 Submittal Procedures.

C. Coordination Digital Data Files: Prepare coordination digital data files according to the following requirements:

1. Contracting Officer (CO) will furnish Contractor one set of digital data files of Drawings (AutoCad.dwg and Revit.rvt) for use in preparing coordination digital data files.

a. CO makes no representations as to the accuracy or completeness of digital data files as they relate to Drawings.
b. Digital Data Software Program: Drawings are available in AutoCad.dwg and Revit.rvt.
c. Files will be provided as is; no format or other changes to files or changes to the objects in the drawings will be done by the Government or Architect. Contractor to sign an electronic files release and indemnification agreement from the Architect.

2. File Preparation Format: Same digital data software program, version, and operating system as original Drawings.
3. File Submittal Format: Submit or post coordination drawing files using Portable Document Format (PDF) file format.

D. Division 01 documents: The following items shall be submitted a minimum of one week prior to the Preconstruction Conference. Contracting Officer will notify Contractor of tentative date for the Pre-Construction Conference.

1. Letter designating Project Superintendent.
2. Construction Schedule.
3. A comprehensive breakdown of the Schedule of Values.
4. Site-specific Safety and Health Plan.
5. A list of Subcontractors for this project.
6. Written statements from subcontractors certifying compliance with applicable labor standard clauses (SF 1413).
7. Satisfactory evidence of liability insurance coverage and workman's compensation for the Contactor and all subcontractors.
8. Construction Access and Staging Plan.
9. Waste Management Plan.
10. Quality Control Plan.
11. Hazardous Materials requirements.
12. Temporary Storm Water Pollution Prevention Plan UPPP.
13. Indoor Air Quality (IAQ) Management Plan.
14. Contractors Commissioning Plan.
15. NPS Project Sustainability Checklist
16. List of Required Construction Permits.
17. Natural Habitat Requirements.
18. All items listed above must be provided to the Contracting Officer before the Pre-Construction Conference is held. If all of these documents have not been received one week prior to the scheduled Pre-Construction Conference date, the conference will be cancelled, Notice to Proceed will not be issued, and the Contracting Officer will consider other contractual remedies. Work shall not commence until written Notice to Proceed has been issued.

E. Other Submittals: Other submittals, including but not limited to shop drawings, product data, samples, and requests for substitutions, shall be submitted for review per Specification 01 33 23.

1.4 REQUESTS FOR INFORMATION (RFIs)

A. General: Immediately on discovery of the need for additional information or interpretation of the Contract Documents, Contractor shall prepare and submit an RFI electronically utilizing the NPS standard RFI format or contractor equivalent providing same information, with attachments in either Word or PDF format as necessary.

1. CO will not respond to RFIs submitted by other entities controlled by Contractor.
2. Coordinate and submit RFIs in a prompt manner to avoid delays in the work.

B. Content of the RFI: Include a detailed, legible description of item needing information or interpretation and the following:

1. RFI number, numbered sequentially.
2. Date.
3. RFI subject.
4. Specification Section number and title and related paragraphs, as appropriate.
5. Drawing number and detail references, as appropriate.
6. Field dimensions and conditions, as appropriate.
7. Contractor's suggested resolution. If Contractor's suggested resolution impacts the Contract Time or the Contract Sum, Contractor shall state impact in the RFI.
8. Contractor's signature.
9. Requested date for response.
10. Attachments: Include sketches, descriptions, measurements, photos, Product Data, Shop Drawings, coordination drawings, and other information necessary to fully describe items needing interpretation.

    a. Include dimensions, thicknesses, structural grid references, and details of affected materials, assemblies, and attachments on attached sketches.

C. Contracting Officer's Action: CO will review each RFI, determine action required, and respond. CO will determine the critical nature of each RFI and issue a response accordingly.

1. The following are not considered to be RFIs and will receive no action:

    a. Requests for approval of submittals.
    b. Requests for approval of substitutions.
    c. Requests for approval of Contractor's means and methods.
    d. Requests for coordination information already indicated in the Contract Documents.
    e. Requests for adjustments in the Contract Time or the Contract Sum.
    f. Requests for interpretation of Architect's actions on submittals.
    g. Incomplete RFIs or inaccurately prepared RFIs.

2. CO's action may include a request for additional information, in which case time for response will date from time of receipt of additional information.
3. CO's action on RFIs may result in the need for a change to the Contract Time or the Contract Sum. All contract changes will be processed following the terms and conditions of the contract.

1.5 PROJECT MEETINGS

A. Preconstruction Conference: Before start of construction, Contracting Officer will arrange an on-site meeting with Contractor.

1. Attendance. The following personnel shall attend the meeting:
   a. CO and/or COR
   b. Contractor's Project Manager
   c. Contractor's Superintendent
   d. Major subcontractors
   e. NPS Project Manager
   f. Others as appropriate
2. The meeting agenda will include the following as a minimum:
   a. Roles & Responsibilities/ Lines of Authority.
   b. Park rules and regulations.
   c. Jobsite Safety.
   d. Workplan & Schedule
   e. Resolution of comments on required Division 01 documents.
   f. Coordination of Subcontractors.
   g. Traffic Control & Safety
   h. Labor law application.
   i. Modifications.
   j. Payments to Contractor.
   k. Payroll reports.
   l. Contract time.
   m. Liquidated damages.
   n. Contractor Performance Evaluation.
   o. Display of Hotline posters.
   p. Notice to proceed.
   q. Correspondence procedures.
   r. Acceptance/rejection of work.
   s. Progress meetings.
   t. Submittal procedures.
   u. NPS Final Accessibility Inspection.
   v. Environmental requirements.
   w. Natural Habitat Requirements.
   x. Hazardous materials.
   y. Permit requirements.
   z. As-constructed drawings/operation and maintenance (O&M) manuals.
   aa. Saturday, Sunday, holiday and night work.
   bb. Reference materials.
   cc. Value Engineering
3. Contractor shall produce meeting minutes within seven (7) calendar days of the preconstruction meeting and distribute to all attendees and to other parties requiring information.

B. Partnering Session: The Contracting Officer or designated representative will schedule a partnering session no more than 14 calendar days after the preconstruction meeting to develop Conditions of Satisfaction (CoS) for the project.

1. Attendance. The following personnel shall attend the meeting:
   a. CO and/or COR

b. Contractor's Project Manager
c. Contractor's Superintendent
d. Major subcontractors
e. NPS Project Manager
f. NPS Stakeholders: Business Management, Cultural Resources, Facilities Management, Natural Resources, Visitor & Resource Protection

2. Conditions of Satisfaction are critical items which must be met for the project to be a success. Budget and schedule are contractual requirements and not part of CoS. The project team shall define CoS using declarative, quantifiable statements, and identify the parties responsible for performance. CoS shall be checked at least monthly during the regular progress meetings. CoS shall not be prioritized: all conditions need to be met to achieve satisfaction / success.

Progress Meetings: The Contracting Officer will schedule progress meetings at agreed upon regular intervals.

C.

1. Attendees: In addition to Government Representatives, each Contractor, Subcontractor, supplier, and other entity concerned with current progress or involved in planning, coordination, or performance of future activities shall be represented at these meetings. All participants at the meeting shall be familiar with the Project and authorized to conclude matters relating to the Work.

2. Agenda: Review and correct or approve minutes of previous progress meeting. Review other items of significance that could affect progress. The meeting agenda will include the following:

a. Approval of minutes of previous meetings.
b. Safety items/ 'toolbox' safety meeting topic.
c. Submittals: status of current and planned submittals.
d. Requests for information (RFI): status of current and planned RFIs and other issues
e. Constraints: review of constraints affecting schedule and costs,
f. Modifications.
g. Construction Schedule update.
   1) Status of previously planned work (% completed)
   2) Review of off-site fabrication and delivery schedules
   3) Inspections of work in progress and project inspections schedule (special inspections, accessibility, etc.)
   4) Updated CPM
   5) Three-week look ahead schedule
h. Review of Conditions of Satisfaction (monthly)
i. Status of Project Record Drawings and O&M manuals.
j. Other business relating to work.
k. Permit requirements.

3. Contractor shall:

a. Prepare agenda for Progress meetings in format approved by the Contracting Officer.

b. Distribute written notice of each Progress meeting four (4) business days in advance of meeting date, except for meetings scheduled at established intervals.

c. Contractor shall produce meeting minutes within three (3) calendar days of the progress meeting and distribute to all attendees and to other parties requiring information.

D. Preinstallation Conferences: Conduct a preinstallation conference at Project site before each construction activity that requires coordination with other construction.

1. Attendees: Installer and representatives of manufacturers and fabricators involved in or affected by the installation and its coordination or integration with other materials and installations that have preceded or will follow, shall attend the meeting. Advise CO of scheduled meeting dates.
2. Agenda: Review progress of other construction activities and preparations for the particular activity under consideration, including requirements for the following:

   a. Contract Documents.
   b. Options.
   c. Related RFIs.
   d. Related Change Orders.
   e. Purchases.
   f. Deliveries.
   g. Submittals.
   h. Sustainable design requirements
   i. Review of mockups.
   j. Possible conflicts.
   k. Compatibility requirements.
   l. Time schedules.
   m. Weather limitations.
   n. Manufacturer's written instructions.
   o. Warranty requirements.
   p. Compatibility of materials.
   q. Acceptability of substrates.
   r. Temporary facilities and controls.
   s. Space and access limitations.
   t. Regulations of authorities having jurisdiction.
   u. Testing and inspecting requirements.
   v. Installation procedures.
   w. Coordination with other work.
   x. Required performance results.
   y. Protection of adjacent work.
   z. Protection of construction and personnel.

3. Record significant conference discussions, agreements, and disagreements, including required corrective measures and actions.
4. Reporting: Contractor shall produce meeting minutes within seven (7) calendar days of the meeting and distribute minutes of the meeting to each party present and to other parties requiring information.
5. Do not proceed with installation if the conference cannot be successfully concluded. Initiate whatever actions are necessary to resolve impediments to performance of the Work and reconvene the conference at earliest feasible date.

1.6 ENVIRONMENTAL COORDINATION

Contractor's Environmental Manager: Designate an on-site party responsible for overseeing the Contractor's conformance to environmental goals for the project and implementing procedures for environmental protection.

A.

1. Qualifications: Minimum 3 years Construction experience on projects of similar size and scope; with environmental procedures similar to those of this project; must be familiar with environmental regulations applicable to construction operations.
2. Responsibilities: Responsibilities shall include:

    a. Compliance with applicable Federal, State, and local environmental regulations, including maintaining required documentation.
    b. Implementation of the Waste Management Plan(WMP).
    c. Implementation of the Under an Acre Pollution Prevention Plan (UPPP).
    d. Timely coordination with Contracting Officer on relevant environmental protection related work including but not limited to site and vegetation clearing, plant salvage, and vegetation restoration.
    e. Selection and documentation of Affirmative Procurement of materials per Section 01 67 00
    f. Present an overview of environmental issues and summarize site specific procedures relating to management plans at the Preconstruction conference.
    g. Training for Contractor personnel in accordance with their position requirements.
    h. Monitoring and documentation of environmental procedures.

B. Perform project quality control in accordance with requirements specified in Related Sections, including:

1. Quality Requirements.
2. Regulatory Requirements.
3. Indoor Air Quality (IAQ) Management.
4. Noise & Acoustics Management.
5. Temporary Storm Water Pollution Prevention
6. Environmental Protection.
7. Construction Waste Management.

C. Contractor's Environmental Training Program: Contractor shall provide environmental training for workers performing work on the project site. Training shall include the following:

1. Overview of environmental issues related to the Project, including lead and asbestos awareness; sensitive habitats; plant and tree protection; and measures to prevent introduction of weed species or spreading weeds.

2. Review of site specific procedures and management plans:

    a. Ground-Disturbing Site Work
    b. Protection of sensitive species and habitats
    c. Wildlife Exclusion Fencing
    d. Working with wildlife

e. Traffic Plan and Fueling
f. Spill Prevention and Control Plan.
g. Construction Waste Management.
h. Noise & Exterior Lighting Management.
i. Temporary Storm Water Pollution Prevention.

3. Compliance with environmental regulations: As specified in Regulatory Requirements. Submit Contractor 40 CFR employee training records upon request of Contracting Officer.

Provide documentation for environmental procedures as specified herein and in accordance with approved Waste Management Plan, and Storm Water Pollution Prevention Plan.

D1.7 PERMITS

General:

A.

1. Permits and Responsibilities: The Contractor shall, without additional expense to the Government, be responsible for obtaining any necessary licenses and permits, and for complying with any Federal, State and municipal laws, codes, and regulations applicable to the performance of the work. The Contractor shall also be responsible for all damages to persons or property that occur as a result of the Contractor's fault or negligence. The Contractor shall also be responsible for all materials delivered and work performed until completion and acceptance of the work.
2. For the purpose of this contract the Contractor will not be considered an agent of the Government. Therefore the Contractor will comply with the appropriate Federal, State and local laws.

B.

Government Furnished Permits: During the development of the project's design the permits listed below were negotiated and agreed to by the Government. The terms and provisions of these permits shall be adhered to for the duration specified in each permit.

1. A federal consistency determination was submitted to and approved by the California Coastal Commission demonstrating concurrence with the CZMA.
2. An application was submitted to the U.S. Army Corps of Engineers (Corps) Regulatory Branch for coverage under Nationwide Permit 18 (Minor Discharges), to demonstrate compliance with the federal Clean Water Act section 404, with identification number SPN-2022-00385.

C.

3. A Water Quality Certification and Order (Order) were issued by the San Francisco Bay Regional Water Quality Control Board demonstrating compliance with Section 401 of the Clean Water Act (Place ID 887082, RM 451942, WDID# 2 CW451942)

Potential Permits: The permits listed below were identified during the design process as likely to be required based on typical means and methods of construction. The list is provided to assist the contractor in determining which permits will be required for the contract's chosen means and methods. The list shall not be considered complete, as it is the responsibility of the contractor to determine means and methods, and obtain the required permits. It is the responsibility of the Contractor to obtain all permits required to legally conduct the work.

a. Project Contractor Licensing and Permit Certification Form – Pacific Gas and Electrical Company (PG&E)
b. Dewatering Permit – California Water Board

Coordination with Agency(ies) with Jurisdiction Issuing Permits

1. Coordination: Contact the Agency(ies) with Jurisdiction as needed and sufficiently in advance to avoid delaying the work: Coordinate meetings, reporting requirements, inspections, or any other requirements.

Administrative Procedures:

D.

1. Coordinate scheduling and timing of required administrative provisions of project permits with Agency(ies) with Jurisdiction, Construction Manager, and Park to avoid conflicts and to ensure orderly execution of the Work.

E.

2. Supply all needed information to Agency(ies) with Jurisdiction issuing permits, pay any fees required and provide all material needed to comply with the permit's conditions and provisions.
3. Upload permits to the project website when the permits are obtained.

PART 2 - PRODUCTS (Not Used)

PART 3 - EXECUTION (Not Used)

END OF SECTION 01 3100

SECTION 01 3216 – CONSTRUCTION SCHEDULE

PART 1 - GENERAL

1.1 SUMMARY

A. This Section consists of Construction Schedule requirements including but not limited to the following:
   1. Schedule of Values
   2. Construction Schedule Requirements.
   3. Construction Schedule Updates.
   4. Time Impact Analysis.

B. Purpose: The purpose of the Construction Schedule is to ensure adequate planning, coordination, scheduling, and reporting during execution of the work by the Contractor. The Construction Schedule will assist the Contractor and Contracting Officer in monitoring the progress of the work, evaluating proposed changes, and processing the Contractor's monthly progress payment.

1.2 DEFINITIONS

A. Activity: A discrete part of a project that can be identified for planning, scheduling, monitoring, and controlling the construction project. Activities included in a construction schedule consume time and resources.

   1. Critical activities are activities on the critical path. They must start and finish on the planned early start and finish times.
   2. Predecessor Activity: An activity that precedes another activity in the network.
   3. Successor Activity: An activity that follows another activity in the network.

B. Cost Loading: The allocation of the Schedule of Values for the completion of an activity as scheduled. The sum of costs for all activities must equal the total Contract Sum, unless otherwise approved by the Contracting Officer.

C. CPM: Critical path method, which is a method of planning and scheduling a construction project where activities are arranged based on activity relationships. Network calculations determine when activities can be performed and the critical path of Project.

D. Critical Path: The longest connected chain of interdependent activities through the network schedule that establishes the minimum overall Project duration and contains no float.

E. Float: The measure of leeway in starting and completing an activity.

1. Float: Float is not for the exclusive use or benefit of either the Government or the Contractor but is jointly owned.
2. Free float is the amount of time an activity can be delayed without adversely affecting the early start of the successor activity.
3. Total float is the measure of leeway in starting or completing an activity without adversely affecting the planned Project completion date.

F. Resource Loading: The allocation of manpower and equipment necessary for the completion of an activity as scheduled.

G. Fragnet: A partial or fragmentary network that breaks down activities into smaller activities for greater detail.

1.3 SUBMITTALS

A. Electronic Copies: All schedules and reports submitted as noted in paragraphs B through H below, shall be submitted to NPS in the native electronic file format and PDF. The PDF version of the schedule shall be formatted for 11x17 sheets in a manner that is clearly readable one page at a time. It is the intent of the Government to limit the number of printed reports to only those reports determined by the project team to be essential.

B. Schedule of Values:
1. After contract award and before the Pre-Construction conference submit a schedule of dollar values based on the Contract Price Schedule. Include bond costs, mobilization, general condition costs, overhead, and profit, and each major category of work.
2. The total cost of all items shall equal the contract sum. The Schedule of Values will form the basis for progress payments as provided for in the General Conditions.

C. Construction Baseline Schedule: After contract award and before the Pre-Construction conference, submit baseline schedule, large enough to show entire schedule for entire construction period.

D. CPM Reports: Concurrent with CPM schedule, submit each of the following reports. Format for each activity in reports shall contain activity number, activity description, resource loading, original duration, remaining duration, early start date, early finish date, late start date, late finish date, and total float in calendar days.
1. Activity Report: List of all activities sorted by activity number and then early start date, or actual start date if known.
2. Logic Report: List of predecessor and successor tasks for all activities, sorted in ascending order by activity number and then early start date, or actual start date if known.
3. Total Float Report: List of all activities sorted in ascending order of total float.

E. Construction Schedule Updates: On or before the 7th day preceding the progress payment request date, submit estimates of the percent completion of each schedule activity and necessary supporting data. Provide two electronic copies, one in native digital format and one PDF.

F. Construction Schedule Revisions and Time Impact Analysis: For each Construction Schedule revision submit two copies of a Time Impact Analysis. Each Time Impact Analysis shall include a Fragmentary Network (Fragnet), incorporated into the currently accepted Construction Schedule, demonstrating how the Contractor proposes to incorporate a modification, change, delay, or Contractor request.

G. Construction Schedule

1. Submit Construction Schedule in critical path (CPM) format showing estimated starting and completion dates for each activity or item of work. Precedence Diagramming Method (PDM) shall be used in preparing the CPM diagrams. CPM schedule shall show work items properly sequenced and intermeshed. Prepare a separate sub-network for each major area of work: drilling, concrete form, concrete pour, steel erection, rough carpentry. Schedule submittals shall include NPS-provided references to special events, activities, and park partners
2. Segregate work to correspond with each specification section. Account for and identify seasonal weather conditions, material delivery, submittal review, inspections, and other constraints considered in the planning and scheduling of all work to ensure completion within the allotted contract time.
3. The level of detail shall be such that construction field work is divided into activities with durations limited to fifteen (15) work days where possible. The limit is not required for construction activities, such as procurement of materials, submittal review, or delivery and fabrication of materials.
4. In developing the logic diagram, ensure that all work, reviews and approvals are included in the logic diagram, and that the work sequences are logical and that the diagram shows a coordinated plan of work.
   a. Schedule planning sessions which include subcontractors ("pull planning") are strongly encouraged to ensure full coordination among work activities and accurate updates.
5. The CPM schedule shall be computer generated, updated monthly showing both the planned schedule and actual progress, and submitted with the monthly payment request. See article 2.2.E.1 below for acceptable CPM software.
6. Provide an updated **three** week look ahead for each progress meeting.

H. Schedule of Values:

1. After contract award and before the Pre-Construction conference submit a schedule of dollar values based on the Contract Price Schedule. Include bond costs, mobilization, general condition costs, overhead, and profit, and each major category of work.
2. The total cost of all items shall equal the contract sum. The Schedule of Values will form the basis for progress payments as provided for in the General Conditions.

1.4 QUALITY ASSURANCE

A. The Contractor shall meet with the Contracting Officer on the day of the preconstruction conference to go over the following:

1. Discuss constraints, including phasing, work stages, area separations, interim milestones and partial Government occupancy.

2. Review delivery dates for Government-furnished products.
3. Review schedule for work of separate Government contracts.
4. Review time required for review of submittals and re-submittals.
5. Review requirements for tests and inspections by independent testing and inspecting agencies.
6. Review time required for completion and startup procedures.
7. Review time required for obtaining and activating permits.
8. Review and finalize list of construction activities to be included in schedule.
9. Review baseline schedule comments, resolve issues and progress on incorporating them
10. Review procedures for updating schedule.
11. Discuss reporting requirements and establish a protocol for naming and transmitting electronic schedules.

B. Contractor's Schedule Representative: Before or at the preconstruction conference, designate an authorized representative to be responsible for the preparation and maintenance of the Construction Schedule. The Scheduler shall have prepared and maintained at least 5 previous schedules of similar size and complexity similar to this Contract, demonstrating proficiency in the use of scheduling software. The authorized representative will be responsible for preparing the Baseline Schedule, all required updates, revisions, Time Impact Analysis and preparation of reports.

1.5 COORDINATION

A. Coordinate preparation and processing of schedules and reports with performance of construction activities and with scheduling and reporting of separate Contractors.

B. Coordinate Construction Baseline Schedule with the Schedule of Values, list of subcontracts, Submittals Schedule, progress reports, payment requests, and other required schedules and reports.

1. In developing the Construction Baseline Schedule, ensure that the Subcontractor’s work at all tiers, as well as the prime Contractor’s work, is included and coordinated.
2. Secure time commitments for performing critical elements of the Work from parties involved.
3. Coordinate each construction activity in the network with other activities and schedule them in proper sequence.

PART 2 - PRODUCTS

2.1 SCHEDULE OF VALUES

A. Breakdown each lump-sum item into component work activities used in the schedule, for which progress payments may be requested. The work activities broken out within the schedule of values shall be integrated into and made a logical part of the construction baseline schedule submitted under this specification. The total costs for the component work activities shall equal

the contract price for that lump-sum item. The Contracting Officer may request data to verify accuracy of dollar values. Include mobilization, general condition costs, overhead and profit in the total dollar value of unit price items and in the component work activities for each lump-sum item. Do not include mobilization, general condition costs, overhead or profit as a separate item.

B. Do not break down unit price items. Use only the contract price for unit price items.

C. The total cost of all items shall equal the contract price. The Schedule of Values will form the basis for progress payments.

D. An acceptable Schedule of Values shall be agreed upon by the Contractor and Contracting Officer before the first progress payment is processed.

2.2 CONSTRUCTION SCHEDULE REQUIREMENTS

A. Construction Baseline Schedule: For projects over 60 calendar days long, prepare Construction Baseline Schedule using a computerized, resource-loaded**,** time-scaled CPM network analysis diagram for the Work.

1. Develop and finalize Construction Baseline Schedule so it can be accepted for use no later than 30 days after date established for the Notice of Award.

   a. Failure to include any work item required for performance of this Contract shall not excuse Contractor from completing all work within applicable completion dates, regardless of Governments acceptance of the schedule.

2. Establish procedures for monitoring and updating Construction Baseline Schedule and for reporting progress. Coordinate procedures with progress meeting and payment request dates.

B. Construction Baseline Schedule Preparation: Prepare a list of all activities required to complete the Work. Using the preliminary CPM network diagram, prepare a skeleton network to identify probable critical paths.

1. Activities: Indicate the estimated duration, sequence requirements, and relationship of each activity in relation to other activities.
2. Critical Path Activities: Identify critical path activities, including those for interim completion dates. Scheduled start and completion dates shall be consistent with Contract milestone dates.
3. Processing: Process data to produce output data on a computer-drawn, time-scaled network. Revise data, reorganize activity sequences, and reproduce as often as necessary to produce the CPM schedule within the limitations of the Contract Time.
4. The Construction Baseline Schedule as developed shall show the sequence and interdependence of activities required for complete performance of the work. Ensure all work sequences are logical and the Construction Baseline Schedule shows a coordinated plan of the work.

5. Resource loading of each activity shall include all personnel by labor category and equipment type and capacity proposed to complete the activity in the duration shown.
6. Consider seasonal weather conditions in planning and scheduling all work influenced by high and low ambient temperatures, wind, or precipitation to ensure completion of all work within the contract time.
7. Time Frame: Proposed duration assigned to each activity shall be the Contractor's best estimate of time required to complete the activity considering the scope and resources planned for the activity.
    a. An early finish date may be shown but the late finish date must be the same date as the last day of the contract period. An early completion schedule must contain the following:
        1) Insert an activity titled “Project Float” as a successor to the last activity in the early project completion schedule network.
        2) Add a milestone titled “Contract End Date” as a successor to the activity “Project Float”.
        3) Add duration to the activity “Project Float” as required so the milestone “Contract End Date” equals the last day of the Contract Period.
    b. Contract completion date shall not be changed by submission of a schedule that shows an early completion date.
    c. The Contractor shall limit use of lead or lag durations between schedule activities.
    d. Project Calendars: Develop and incorporate the following calendars:

        1) Administrative Calendar: Include a calendar that is based on a 7 day week to be used on any activities that are based on calendar days. Apply this calendar to administrative tasks or any other tasks that are not affected by non-working days (Federal Holidays, weather, etc.).
        2) Project Calendar: Include a calendar that is based on the planned work week for the project. Include Federal Holidays, weekends, and any other non-work days indicated in the contract documents. Apply this calendar to activities which are not anticipated to be affected by weather.
8. Weather Calendar: Utilize the Project Calendar and show anticipated normal downtime related to weather as non-working time. Weather days shall be based on data for the local area from a reliable source like the National Oceanic and Atmospheric Administration (NOAA), National Park Service records, or source acceptable to the Contracting Officer. Apply this calendar to activities that are anticipated to be affected by weather. Activity Duration: Define activities so no activity is longer than 21 calendar days, except for non-construction activities including mobilization, shop drawings and submittals, fabrication and delivery of materials and equipment.
    a. Procurement Activities: Include procurement process activities for long lead items and major items, requiring a cycle of more than 60 calendar days, as separate activities in the schedule. Procurement cycle activities include, but are not limited to, submittals, approvals, purchasing, fabrication, and delivery. Submittal Review Time: Include review and re-submittal times indicated. Coordinate submittal review times in Construction Baseline Schedule.
    b. Startup and Testing Time: Include not less than **ten** days for startup and testing and commissioning activities.
    c. Substantial Completion: Allow time for Government administrative procedures necessary for certification of Substantial Completion. (For more information, refer to Division 01 Specification 01 7700 “Closeout Procedures.”)

9. Constraints: Include constraints and work restrictions indicated in the Contract Documents and as follows in schedule, and show how the sequence of the Work is affected.
   a. Work under More Than One Contract: Include a separate activity for each contract.
   b. Work Restrictions: Show the effect of the following items on the schedule:
      1) Uninterruptible services.
      2) Partial occupancy before Substantial Completion.
      3) Special inspections provisions.
      4) Seasonal variations.
      5) Permit provisions.
      6) Restoration and mitigation.
      7) Sustainability requirements.
      8) Commissioning provisions.
   c. Other Constraints: Completion of mitigation requirements.
   d. Work Stages: Indicate important stages of construction for each major portion of the Work.

      1) Subcontract awards.
      2) Submittals.
      3) Purchases.
      4) Mockups.
      5) Fabrication.
      6) Sample testing.
      7) Deliveries.
      8) Installation.
      9) Tests and inspections.
      10) Adjusting.
      11) Building flush-out.
      12) Building commissioning activities.
10. Milestones: Include milestones indicated in the Contract Documents in schedule, including, but not limited to, the Notice to Proceed, Public Health Certification for Food Facility, Certificate of Occupancy, Substantial Completion.

C. Joint Review, Revision, and Acceptance:

1. Within seven calendar days of receipt of the Contractor's proposed Construction Baseline Schedule, the Contracting Officer and Contractor shall meet for joint review, correction, or adjustment of the initial Construction Baseline Schedule. Any areas which, in the opinion of the Contracting Officer, conflict with timely completion of the project shall be subject to revision by the Contractor.
2. Within seven calendar days after the joint review between the Contractor and Contracting Officer, the Contractor shall revise and resubmit the Construction Baseline Schedule in accordance with agreements reached during the joint review.
3. In the event the Contractor fails to define any element of work, activity, or logic, and the Contracting Officer review does not detect this omission or error, such omission or error, when discovered by the Contractor or Contracting Officer, shall be corrected by the Contractor within seven calendar days and shall not affect the contract period.

4. Upon acceptance of the Construction Baseline Schedule by the Contracting Officer, save the schedule as a baseline and update on a monthly basis. The construction schedule update will be used to evaluate the Contractor's monthly applications for payment based upon information developed at the monthly Construction Schedule update meeting.

D. Recovery Schedule: When periodic schedule update indicates the Work is **14** or more calendar days, or more than 10% behind the current accepted schedule, a separate recovery schedule indicating means by which Contractor intends to regain compliance with the schedule must also be submitted. Indicate changes to working hours, working days, crew sizes, and equipment required to achieve compliance, and date by which recovery will be accomplished.

E. Computer Software: Prepare schedules using a program that has been developed specifically to manage construction schedules.

1. Use construction scheduling software approved by and fully accessible to the Contracting Officer – this may include Microsoft Project or Primavera for Windows operating system.

PART 3 - EXECUTION

3.1 CONSTRUCTION SCHEDULE UPDATES

A. Progress Meeting Updates: Provide in PDF format **three** week look-ahead schedule, derived from the currently accepted schedule, before each weekly progress meeting. Utilize the look-ahead schedule to facilitate and take notes on discussions held during the progress meeting.

B. Monthly Schedule Updates:

1. General: Update the Construction Schedule on a monthly basis to reflect actual construction progress and activities throughout the entire contract period and until project substantial completion. The status date of each schedule update shall be the 7th day preceding the progress payment request date.
2. Procedure: The Contractor shall meet with the Contracting Officer each month at a Construction Schedule update meeting to review actual progress made through the status date of the Construction Schedule update, including dates activities were started and/or completed and the percentage of work completed on each activity started and/or completed.
3. Reports: Concurrent with making revisions to schedule, prepare tabulated reports showing the following:
   a. Identification of activities that have changed.
   b. Changes in early and late start dates.
   c. Changes in early and late finish dates.
   d. Changes in activity durations in workdays.
   e. Changes in the critical path.
   f. Changes in total float or slack time.
   g. Changes in the Contract Time.
4. Narrative: The report shall include a brief description of the actual progress made during the update period; actual and potential delaying activities; any impediments to progress;

issues related to inclement weather; progress toward established milestones and project float. The report shall include a brief description of the work anticipated to be performed in the next month. Any minor revisions to the schedule should be identified so they can be evaluated and accepted or rejected.

5. As the Work progresses, indicate Actual Completion percentage for each activity.
6. If the schedule update shows a late finish date after the contract completion date, at a minimum, include the following in the narrative with your submission:
   a. Any known delays.
   b. Actions that will be taken to get back on schedule.
   c. Pending modifications.
   d. Impediments or constraints affecting progress.
7. Progress Payments: The monthly updating of the currently accepted Construction Schedule shall be an integral part of the process upon which progress payments will be made under this contract. If the Contractor fails to provide schedule updates or revisions, then a portion of the monthly payment may be retained until such corrections have been made.

C. Distribution: Distribute electronic copies of accepted schedule to Contracting Officer, Contracting Officers Representative, Construction Management Representative, Subcontractors, testing and inspecting agencies, and other parties identified by Contractor with a need-to-know schedule responsibility.

1. Post copies in Project meeting rooms and temporary field offices.
2. When revisions are made, distribute updated schedules to the same parties and post in the same locations. Delete parties from distribution when they have completed their assigned portion of the Work and are no longer involved in performance of construction activities.

D. Construction Schedule Revisions:

1. Required Revisions: If, as a result of the monthly schedule update, it appears the currently accepted Construction Schedule no longer represents the actual prosecution and progress of the work, the Contracting Officer will request, and the Contractor shall submit, a revision to the Construction Schedule. The Contractor may also request reasonable revisions to the currently accepted Construction Schedule in the event the Contractor's planning for the work is revised. If the Contractor desires to make changes, the Contractor shall notify the Contracting Officer in writing, stating the reason for the proposed revision. Accepted revisions will be incorporated into the currently accepted Construction Schedule for the next monthly schedule update.
2. Procedure: If revision to the currently accepted Construction Schedule is contemplated, the Contractor or Contracting Officer shall so advise the other in writing at least seven calendar days prior to the next monthly schedule update meeting, describing the revision and reasons for the revision. Government-requested revisions will be presented in writing to the Contractor, who shall respond in writing within seven calendar days.
3. Reports: Concurrent with making revisions to schedule, prepare tabulated reports showing the following:
   a. Identification of activities that have changed.
   b. Changes in early and late start dates.
   c. Changes in early and late finish dates.
   d. Changes in activity durations in workdays.

e. Changes in the critical path.
f. Changes in total float or slack time.

3.2 TIME IMPACT ANALYSIS FOR CONTRACT MODIFICATIONS CHANGES DELAYS AND CONTRACTOR REQUESTS:

A. Requirements: When contract modifications or changes are initiated, delays are experienced, or the Contractor desires to revise the currently accepted Construction Schedule, the Contractor shall submit to the Contracting Officer a written time impact analysis illustrating the influence of each modification, change, delay, or Contractor request on the contract time.

B. Time Extensions: Activity delays, which result in projecting a late completion date, shall not automatically mean that an extension of the contract time is warranted or due the Contractor. It is possible that a modification, change, or delay will not affect existing critical path activities or cause non-critical activities to become critical. A modification, change, or delay may result in only absorbing a part of the available total float that may exist within an activity chain of the Schedule, thereby not causing any effect on the contract time. Time extensions will be granted in accordance with the terms of the contract.

C. Extension of the contract time will be granted only to the extent the equitable time adjustments to the activity or activities affected by the modification, change, or delay exceeds the total (positive or zero) float available on a particular activity.

D. Procedure: Each time impact analysis shall be submitted within the time period stated in a request for proposal, or the time period designated under the clauses entitled Changes or Default. In cases where the Contractor does not submit a written request for extension of time and a time impact analysis within the designated time, it is mutually agreed that the particular modification, change, delay, or Contractor request does not require an extension of the contract time. Upon acceptance, the time impact analysis shall be incorporated into the currently accepted Construction Schedule at the next monthly schedule update.

E. Contract Modifications: For each proposed contract modification and concurrent with its submission, prepare a time-impact analysis using fragnets to demonstrate the effect of the proposed change on the overall Construction Schedule.

END OF SECTION 01 3216

SECTION 01 3323 - SUBMITTAL PROCEDURES

PART 1 - GENERAL

1.1 SUMMARY

A. This Section includes administrative and procedural requirements for submitting Shop Drawings, Product Data, Samples, and other submittals. This section refers solely to electronic submittals and submittal procedures

1.2 DEFINITIONS

A. Action Submittals: Written, graphic information, and physical samples that require Government's responsive action.

B. Informational Submittals: Written information that does not require Government's responsive action. Submittals may be rejected for not complying with the requirements.

C. Portable Document Format (PDF): An open standard file format licensed by Adobe Systems used for representing documents in a device-independent and display resolution-independent fixed-layout document format.

1.3 GENERAL SUBMITTAL PROCEDURES

A. General: Prepare and submit submittals required by individual Specification Sections. Types of submittals are indicated in individual specific sections.

1. Contracting Officer reserves the right to require submittals in addition to those called for in individual sections.

B. Coordination: Coordinate preparation and processing of submittals with performance of construction activities. Review them for legibility, accuracy, completeness, and compliance with Contract Documents.

1. Coordinate each submittal with fabrication, purchasing, testing, delivery, other submittals, and related activities that require sequential activity.

2. Coordinate transmittal of different types of submittals for related parts of the Work so processing will not be delayed because of need to review submittals concurrently for coordination.

1. Contracting Officer reserves the right to withhold action on a submittal requiring coordination with other submittals until related submittals are received.

C. Submittal List: A submittal list has been attached to the end of this Specification Section. The intent is to provide an overall summary of submittal requirements and not a comprehensive list.

The requirements of the individual Specification Sections, terms and conditions of the Contract still apply regardless of what is shown on the submittal list.

D. Processing Time: Allow enough time for submittal review, including time for re-submittals, as follows. Time for review shall commence when an e-mail notification is received by the Contracting Officer (or designee) indicating the submittal has been posted on the NPS SharePoint website and is ready for review. When the Contracting Officer has completed their review, an e-mail notification will be sent to the Contractor indicating the submittal has been processed. No extension of the Contract Time will be authorized because of failure to transmit submittals enough in advance of the Work to permit processing, including re-submittals.

1. Action Submittals

    1. Initial Review: Allow 30 days for initial review of each submittal. Allow additional time if coordination with subsequent submittals is required.
    2. Re-submittal Review: Allow 10 days for review of each re-submittal.

2. Informational submittals

    1. Review: Allow 10 days for review of each submittal.

E. Requests for Substitution

1. For each item proposed as an "approved equal," submit supporting data, including:

    1. Drawings and samples as appropriate.
    2. Comparison of the salient characteristics of the proposed item with that specified.
    3. Changes required in other elements of the work because of the substitution.
    4. Name, address, and telephone number of vendor.
    5. Manufacturer's literature regarding installation, operation, and maintenance, including schematics for electrical and hydraulic systems, lubrication requirements, and parts lists. Describe availability of maintenance service, and state source of replacement materials.

2. A request for approval constitutes a representation that Contractor:

    1. Has investigated the proposed item and determined that it is equal or superior in all respects to that specified.
    2. Will provide the same warranties for the proposed item as for the item specified.
    3. Has determined that the proposed item is compatible with interfacing items.
    4. Will coordinate the installation of an approved item and make all changes required in other elements of the work because of the substitution.
    5. Waives all claims for additional expenses that may be incurred as a result of the substitution.

F. Electronic Submittals**:** Identify and incorporate information in each electronic submittal file as follows:

1. CM-16 Transmittal Form: All submittals shall be transmitted using National Park Service CM-16 form or Contractor equivalent providing same information. The form is accessed and completed on the NPS SharePoint Project website. No action will be taken on a

submittal item unless accompanied by the transmittal form.

a. Complete the general information at the top of the form.
b. Provide all required information based on the submittal type
c. Attach all related documents.
d. Sign the form in the contractor section at the bottom of the form, and select "submit" when complete.

2. Physical samples: Complete the submittal form on the NPS SharePoint Project website as described above. Deliver the physical sample to the CO (or designee) on site for processing. All comments and actions will be documented on the form on the NPS SharePoint Project website.

G. Identification: Submittal number or other unique identifier, including revision identifier.

1. Submittal number shall use a sequential number (e.g., .001). Re-submittals shall include an alphabetic suffix after another decimal point (e.g., 001.A).

H. Re-submittals: Make re-submittals using the same process used with the initial submittal.

1. Note date and content of previous submittal.

2. Note date and content of revision in the title block on the form and clearly indicate the extent of revision.

3. Re-submit submittals until they are marked "Approved" or "Approved with notations".

I. Distribution: Furnish copies of final submittals to manufacturers, subcontractors, suppliers, fabricators, installers, and others as necessary for performance of construction activities.

J. Use for Construction: Use only final submittals with mark indicating "Approved" or "Approved with notations". Ensure all notations have been incorporated and, at a minimum, keep one copy of the final approved submittal on site for use during construction.

1.4 CONTRACTOR'S USE OF CAD FILES

A. General: At Contractor's written request, copies of CAD or REVIT files will be provided to Contractor for Contractor's use in connection with Project, subject to the following conditions:

1. Files will be provided as is; no format or other changes to files or changes to the objects in the drawing will be done by the Government.

B. After a written request is received from the contractor for CAD files, the project manager will provide coordinate information and electronic drawings in AutoCAD or Revit format within 14 days.

1. If files are provided by the design team, contractor may be required to fill out an electronic file release form prior to provision of the files.

PART 2 - PRODUCTS

2.1 ACTION SUBMITTALS

A. General: Prepare and submit Action Submittals required by individual Specification Sections.

1. Contracting Officer reserves the right to require submittals in addition to those called for in individual sections.

B. Product Data: Collect information into a single submittal for each element of construction and type of product or equipment.

1. If information must be specially prepared for submittal because standard printed data are not suitable for use, submit as Shop Drawings, not as Product Data.

2. Mark each submittal to show which products and options are applicable.

3. Include the following information, as applicable:

a. Manufacturer's product specifications.
b. Manufacturer's installation instructions: When Contract Documents require compliance with manufacturer's printed instructions, provide one complete set of instructions to Contracting Officer and keep another complete set of instructions at the project site until substantial completion.
c. Manufacturer's catalog cuts: Submit only pertinent pages; mark each page of standard printed data to identify specific products proposed for use.
d. Wiring diagrams showing factory-installed wiring.
e. Printed performance curves.
f. Operational range diagrams.
g. Compliance with specified referenced standards.
h. Testing by recognized testing agency.

4. Submit product data in PDF file format before or concurrent with samples.

C. Shop Drawings: Prepare Project-specific information, drawn accurately to scale. Do not base Shop Drawings on reproductions of the Contract Documents or standard printed data**.**

Preparation: Fully illustrate requirements in the Contract Documents. Include the following information, as applicable:

a. Dimensions.
b. Identification of products.
c. Fabrication and installation drawings.
d. Roughing-in and setting diagrams.
e. Wiring diagrams showing field-installed wiring, including power, signal, and control wiring.
f. Shopwork manufacturing instructions.
g. Templates and patterns.
h. Schedules.
i. Notation of coordination requirements.

j. Notation of dimensions established by field measurement.
k. Relationship to adjoining construction clearly indicated.
l. Seal and signature of professional engineer if specified.
m. Wiring Diagrams: Differentiate between manufacturer-installed and field-installed wiring.

1. Submit shop drawings as a PDF electronic file.

D. Samples: Submit Samples for review of kind, color, pattern, and texture for a check of these characteristics with other elements and for a comparison of these characteristics between submittal and actual component as delivered and installed.

1. Transmit Samples that contain multiple, related components such as accessories together in one submittal package.

2. Identification: Attach label on unexposed side of Samples that includes the following:

a. Generic description of Sample.
b. Product name and name of manufacturer.
c. Sample source.
d. Submittal Number and title of appropriate Specification Section.

3. Disposition: Maintain sets of approved Samples at Project site, available for quality-control comparisons throughout the course of construction activity. Sample sets may be used to determine final acceptance of construction associated with each set.

a. Samples for Initial Selection: Submit manufacturer's color charts consisting of units or sections of units showing the full range of colors, textures, and patterns available.

b. Number of Samples: Submit two full set(s) of available choices where color, pattern, texture, or similar characteristics are required to be selected from manufacturer's product line. Contracting Officer will return one set with options selected.

4. Samples for Verification: Submit full-size units or Samples of size indicated, prepared from same material to be used for the Work, cured and finished in manner specified, and physically identical with material or product proposed for use, and that show full range of color and texture variations expected. Samples include, but are not limited to, the following: partial sections of manufactured or fabricated components; small cuts or containers of materials; complete units of repetitively used materials; swatches showing color, texture, and pattern; color range sets; and components used for independent testing and inspection.

a. Number of Samples: Submit four sets of Samples. Contracting Officer will retain two Sample sets; remainder will be returned.

E. Construction Materials: The Contractor is encouraged to submit for approval products made out of recycled or environmentally responsible material consistent with Section 01 6700 Product Requirements. Every effort will be made by the National Park Service to approve these materials.

2.2 INFORMATIONAL SUBMITTALS

A. General: Prepare and submit Informational Submittals required by individual Specification Sections.

1. Certificates and Certifications: Provide a notarized statement that includes signature of entity responsible for preparing certification. Certificates and certifications shall be signed by an officer or other individual authorized to sign documents on behalf of that entity.

2. Informational submittals that do not comply with the requirements specified in the Contract Documents will be rejected and one copy will be returned.

B. Coordination Drawings: Comply with the requirements specified in Section 01 3 00 "Project Management and Coordination."

C. Contractors Construction Schedule: Comply with the requirements specified in Section 01 3216 "Construction Schedule."

D. Site Specific Safety and Health Plan: Comply with the requirements specified in Section 0135 23 "Safety Requirements."

E. Schedule of Values: Comply with the requirements specified in Section 01 3216 "Construction Schedule."

F. Waste Recycling Plan: Comply with the requirements specified in Section 01 7419 "Construction Waste Management and Disposal."

G. NPS Project Sustainability Checklist: Prepare most current version from DSC Workflow site for applicable sections of the checklist. Fill out column under Construction.

H. Quality Control Plan: Comply with the requirements specified in Section 01 4000 "Quality Requirements."

I. Under An Acre Pollution Prevention Plan: Comply with the requirements specified in Section 01 5723 "Temporary Storm Water Pollution Prevention".

J. Indoor Air Quality Management Plan: Comply with the requirements specified in Section 01 57 19.11 "Indoor Air Quality Management."

K. Sustainable Design Submittals: Comply with requirements specified in Section 01 81 13 "Sustainable Design Requirements for Non-LEED Projects". Qualification Data: Prepare written information that demonstrates capabilities and experience of firm or person. Include lists of completed projects with project names and addresses, names and addresses of architects and owners, and other information specified.

L. Welding Certificates: Prepare written certification that welding procedures and personnel comply with the requirements in the Contract Documents. Submit record of Welding Procedure Specification (WPS) and Procedure Qualification Record (PQR) on AWS forms. Include names of firms and personnel certified.

M. Installer Certificates: Prepare written statements on manufacturer's letterhead certifying that Installer complies with the requirements in the Contract Documents and, where required, is authorized by manufacturer for this specific Project.

N. Manufacturer Certificates: Prepare written statements on manufacturer's letterhead certifying that manufacturer complies with the requirements in the Contract Documents. Include evidence of manufacturing experience where required.

O. Product Certificates: Prepare written statements on manufacturer's letterhead certifying that product complies with the requirements in the Contract Documents.

P. Material Certificates: Prepare written statements on manufacturer's letterhead certifying that material complies with the requirements in the Contract Documents.

Q. Material Test Reports: Prepare reports written by a qualified testing agency, on testing agency's standard form, indicating and interpreting test results of material for compliance with the requirements in the Contract Documents.

R. Product Test Reports: Prepare written reports indicating current product produced by manufacturer complies with the requirements in the Contract Documents. Base reports on evaluation of tests performed by manufacturer and witnessed by a qualified testing agency, or on comprehensive tests performed by a qualified testing agency.

S. Research/Evaluation Reports: Prepare written evidence, from a model code organization acceptable to authorities having jurisdiction, that product complies with building code in effect for Project.

T. Preconstruction Test Reports: Prepare reports written by a qualified testing agency, on testing agency's standard form, indicating and interpreting results of tests performed before installation of product, for compliance with performance requirements in the Contract Documents.

U. Compatibility Test Reports: Prepare reports written by a qualified testing agency, on testing agency's standard form, indicating and interpreting results of compatibility tests performed before installation of product. Include written recommendations for primers and substrate preparation needed for adhesion.

V. Field Test Reports: Prepare reports written by a qualified testing agency, on testing agency's standard form, indicating and interpreting results of field tests performed either during installation of product or after product is installed in its final location, for compliance with the requirements in the Contract Documents.

W. Maintenance Data: Prepare written and graphic instructions and procedures for operation and normal maintenance of products and equipment. Comply with the requirements specified in Section 01 78 23 "Operation and Maintenance Data."

X. Design Data: Prepare written and graphic information, including, but not limited to, performance and design criteria, list of applicable codes and regulations, and calculations. Include list of assumptions and other performance and design criteria and a summary of loads. Include load diagrams if applicable. Provide name and version of software, if any, used for calculations. Include page numbers.

Y. Manufacturer's Instructions: Prepare written or published information that documents manufacturer's recommendations, guidelines, and procedures for installing or operating a product or equipment. Include name of product and name, address, and telephone number of manufacturer.

Z. Manufacturer's Field Reports: Prepare written information documenting factory-authorized service representative's tests and inspections. Include the following, as applicable:

AA. Statement on condition of substrates and their acceptability for installation of product.

BB. Summary of installation procedures being followed, whether they comply with the requirements and, if not, what corrective action was taken.

CC. Results of operational and other tests and a statement of whether observed performance complies with the requirements.

PART 3 - EXECUTION

3.1 CONTRACTOR'S REVIEW

A. Review each submittal and check for coordination with other Work of the Contract and for compliance with the Contract Documents. Note corrections and field dimensions.

3.2 CONTRACTING OFFICER'S ACTION

A. General: Submittals will be disapproved without technical review if identification information is missing, not filled in, or if placed on the back of the submittal; an incorrect format of submittals is provided; the transmittal form is incorrectly filled out; submittals are not coordinated; or submittals do not show evidence of Contractor's approval.

1. Any work done or orders for materials or services placed before approval shall be at the Contractor's own risk.

B. Action Submittals: Contracting Officer will review each submittal, generate comments on corrections or modifications required, and indicate the appropriate action on the CM-16 Transmittal Form. The submittal will be marked in one of three ways as defined below:

1. APPROVED: Acceptable with no corrections.

2. APPROVED WITH NOTATIONS: Minor corrections or clarifications required. All comments are clear and no further review is required. The Contractor shall address all review comments when proceeding with the work.

3. DISAPPROVED - RESUBMIT: Rejected as not in accordance with the contract or as requiring major corrections or clarifications. The Contracting Officer will identify the reasons for disapproval. The Contractor shall revise and resubmit with changes clearly identified.

C. Informational Submittals: Contracting Officer will review each submittal and will either accept or reject it.

D. Partial submittals are not acceptable, will be considered non-responsive, and will be returned without review.

END OF SECTION 01 3323

SECTION 01 3233 PHOTO DOCUMENTATION

PART 1 - GENERAL

1.1 SUMMARY

A. This Section includes administrative and procedural requirements for the following:
   1. Existing Condition images.
   2. Periodic construction images.

B. See Division 01 Section 01 7700 "Closeout Procedures" for a complete listing of closeout documents.

C. See Division 01 Section 01 7900 "Demonstration and Training" for submitting videotapes of demonstration of equipment and training of NPS personnel.

1.2 SUBMITTALS

A. Existing Conditions Images: Submit images electronically within seven days of beginning of construction activities at the site. Include the following for each:
   1. Include Date, time and number (sequentially number all images) in filename.
   2. Description of vantage point, indicating location, direction (by compass point), and elevation or story of construction.
   3. Submit digital images exactly as originally recorded in the digital camera, without alteration, manipulation, editing, or modifications using image-editing software.

B. Construction Images: Submit images electronically within seven days of taking the image. Include the following for each:
   1. Include Date, time and number (sequentially number all images) in filename.
   2. Description of vantage point, indicating location, direction (by compass point), and elevation or story of construction.
   3. Submit digital images exactly as originally recorded in the digital camera, without alteration, manipulation, editing, or modifications using image-editing software.

C. Closeout: Submit a complete set of digital image electronic files as a Project Record Document**.** Submit on either a portable drive, Compact Disc (CD) or Digital Video Disc (DVD).
   1. Provide an index as a separate file on the storage device. List each image as a file name with number, date, and time. Include description and or vantage point image was taken.
   2. Submit images that have the same aspect ratio as the sensor, un-cropped.

PART 2 - PRODUCTS

2.1 FORMAT REQUIREMENTS

A. Media: USB-c|USB solid state drive, USB memory stick, CD-R Archival Gold or DVD-R Archival Gold

B. Media Labels: Archival CD/DVD labeling markers, archival labels, or direct print CD

C. Images: Provide sRGB color images in JPEG format. Minimum sensor size of eight mega pixels, and at an image resolution of not less than 3200 by 2400 pixels.

PART 3 - EXECUTION

3.1 CONSTRUCTION IMAGES

A. General: Take digital images using the maximum range of depth of field, and that are in focus, to clearly show the Work. Images with blurry or out-of-focus areas will not be accepted.

1. Maintain index with each set of Construction images that identifies the number, date, time, and description for each.
2. Maintain one set of images accessible in the field office at the Project site, available at all times for reference.

B. Existing Condition Images: Before commencement of excavation, commencement of demolition, and starting construction, take color digital images of Project site and surrounding properties, including existing items to remain during construction, from different vantage points, as directed by Contracting Officer.

1. Flag construction limits before recording construction images.
2. Take 12 minimum separate images to show existing conditions adjacent to property before starting the Work.

C. Periodic Construction Images: Take 12 color, digital images monthly, coinciding with the cutoff date associated with each Application for Payment. Select vantage points to show status of construction and progress since last images were taken.

D. Additional Images: Contracting Officer may issue requests for additional images, in addition to periodic Construction images specified.

1. Three days notice will be given, where feasible.
2. In emergency situations, take additional images within 24 hours of request.
3. Circumstances that could require additional images include, but are not limited to, the following:
   a. Immediate follow-up when on-site events result in construction damage or losses.
   b. Images to be taken at fabrication locations away from Project site.
   c. Substantial Completion of a major phase or component of the Work.
   d. Extra record images at time of final acceptance.

END OF SECTION 01 3233

SECTION 01 34 00 - NATURAL HABITAT REQUIREMENTS

PART 1 - GENERAL

1.1 DESCRIPTION

A. The work of this section consists of protecting natural resources in the Golden Gate National Recreation Area.

B. Work activities shall be conducted in a manner to avoid impacts outside of work zones and to reduce impacts within a work zone

1.2 ENVIRONMENTAL PERMITS

1.3 Compliance with Regulatory Permits: The Contractor shall completely review, be familiar with and adhere to the terms of all regulatory permits and agency approvals for this project. This includes biological opinions from the U.S. Army Corps of Engineers, water quality certifications from the Regional Water Quality Control Board, and California Coastal Commission.

1.4 RESOURCE PROTECTION SURVEYS

A. A minimum of 30 days prior to project start up, the Contractor shall meet with the Contracting Officer's Representative (COR) and the NPS-approved qualified biologist (Biologist). During the onsite meeting, the COR, Contractor, and Biologist shall discuss:

1. The Contractor Proposed Start Date and Duration

2. Equipment and special methods to be used in natural resource sensitive areas

B. Based on the Contractor Proposed Start Date and Duration, the NPS-approved Biologist will complete the surveys necessary and assist in placement of flagging and fencing to demarcate avoidance areas for the project site.

C. Within 15 days of the Contractor/Biologist meeting, the Contractor shall provide a proposed project schedule, which takes into account the recommendations outlined by the Biologist.

1.5 SUBMITTALS

A. As specified in Section 01 33 23.

B. Daily Work Schedule: 15 days before start of ground-disturbing site work, submit a Daily Work Schedule, detailing construction work in natural resource areas. Key schedule to drawings and include the following information:

1. Starting and ending dates of ground-disturbing construction.
2. Locations of temporary facilities, such as barriers (including wildlife exclusion fencing), field offices, staging areas, sanitary facilities, and haul and access roads.

3. Types of construction, such as tree removal, clearing, topsoil stripping, structure or trench excavation, landscaping, and post construction clean-up
4. Methods and equipment used for each type of construction.
5. Plan for relocating work in the event of temporary work stoppages at each natural resource area.
6. Erosion and Sediment Control Plan: See Section 01 57 00 "Temporary Storm Water Pollution Prevention".

1.6 START-UP MEETING

A. The Contractor and all personnel shall be required to attend a start-up meeting in which all personnel are trained by the NPS regarding the following:
1. Work within a National Park.
2. Protection of sensitive species and habitats, including conservation measures.
3. Measures to prevent the spread of invasive plants and pathogens (including cleaning of equipment and other gear)
4. Erosion Control Implementation.
5. Coordination of required temporary fencing.
6. Dust control during construction.
7. Working with wildlife – avoidance of feeding, not approaching or disturbing, preventing wildlife access to trash, etc.
8. Other appurtenant personnel education.
9. Natural Resource Point of Contact
10. The Contractor shall provide at least two hours of Erosion and Sediment Control training to its workers. Training shall include a review of the requirements of the project UPPP and be led by the project Qualified SWPPP Developer (QSD) and Qualified SWPPP Practitioner (QSP). The qualifications of the QSD and QSP must be submitted to the COR five days prior to the training for approval.

PART 2 - – PRODUCTS

A. BARRICADES. Per Section 01 50 00 "Temporary Facilities and Controls".

PART 3 - – EXECUTION

3.1 BARRICADES

A. Construct as specified in Section 01 50 00

B. Locate as directed by COR.

3.2 NESTING / MIGRATORY BIRDS

A. The park protects native bird species and adheres to the Migratory Bird Treaty Act, prohibiting the take of migratory birds, nests, or bird parts. Any removal (including mowing and tree-trimming) of landscaped, non-native or native vegetation shall follow park guidelines for

protection of nesting birds. Vegetation removal should be scheduled from August 1—February 28 to avoid the land bird nesting season from March 1—July 31. Cut vegetation should be maintained at low stature (less than eight inches) during the breeding season to preclude birds from nesting in these areas. Nest protection includes cliff swallows or other migratory birds nesting on or in buildings. Bird exclusion measures, such as temporary netting, would also be considered for implementation prior to the start of nesting season.

3.3 VEGETATION

A. In areas where vegetation will be disturbed by contract work, the Contractor shall identify such areas in advance to the COR and mutually agree on minimum disturbance areas. An NPS-approved qualified Biologist shall approve vegetation removal areas. Removal of native vegetation shall be minimized where possible, and the footprint of the construction impact shall be minimized to only essential areas of clearing.

3.4 WORK STOPPAGE

A. The Contractor shall plan, schedule, and execute the work to prevent stoppages at one area from stopping all work at the construction site.

3.5 INVASIVE PLANTS

A. All vehicles, tools and equipment shall be cleaned of dirt and vegetative material prior to entering the work site each day and at the end of each work day.

B. Any trucks or equipment driving from one work zone to another that requires passing through any areas with weeds shall take measures to prevent the spread of weed seeds via truck tires or tracks

3.6 WATER RESOURCES

A. Wetlands: The park protects wetlands under numerous laws and policies including the 1972 Clean Water Act and Executive Orders 11988 (Floodplain Management) and 11990 (Protection of Wetlands). For work in or near wetlands, the Contractor is responsible for complying with additional precautions to avoid and minimize impacts. The Contractor shall not enter, disturb, destroy, or allow discharge of contaminants into any wetlands without specific authorization from the park and permits from other regulatory agencies. Authorization to enter specific wetlands shall not relieve the Contractor from any obligation to protect other wetlands within, adjacent to, or in the vicinity of the construction site and associated boundaries. Heavy equipment shall not be used in wetlands except as specifically authorized by permits.

B. Storage or staging areas for equipment, materials, chemicals, etc. shall be located as far away as is practical from creek, wetland, or protected areas.

END OF SECTION 01 34 00

SECTION 01 35 13.22 – ARCHEOLOGICAL PROTECTION

PART 1 - GENERAL

1.1 SUMMARY

A. The work of this section consists of protecting archeological resources potentially contained in soil deposits.

B. Work in Sensitive Areas: The Golden Gate National Recreation area has some project locations with the potential for discovery of archaeological resources. If a particular area has been identified as a Sensitive Area, or if resources are detected during construction, the construction may be monitored by both NPS construction may be monitored by both an NPS archeological monitor and/or an American Indian tribal monitor affiliated with involved GGNRA lands. Monitoring will occur during any ground disturbing activities within 100 feet of known archaeological sites or archaeologically sensitive areas as defined by the park archaeologist. The archaeological monitor and tribal monitor will work under contract through the National Park Service. The Contractor shall provide a minimum of 7 calendar days advance notice to the COR and park archeologist with specific dates for all ground-disturbance activities to ensure the monitors have adequate time to be present during pertinent actions.

C. Sensitive Areas have been identified in association with this project.

1.2 DEFINITIONS

A. Archeological Resources: Archeological resources are the physical evidences of past human activity, including evidences of the effects of that activity on the environment. Archeological resources represent both prehistoric and historic time periods. They are found above and below ground, within buildings and structures, and underwater.

B. Archeologically Sensitive Areas: Areas that have the potential to contain significant (National Register eligible) archeological resources.

C. Non-sensitive Areas: Areas with little, if any, potential of containing significant (National Register eligible) archeological resources.

D. Archeological Discovery: Previously unknown historic or prehistoric properties, including human remains, found during the course of contractual activities. Work will stop within 50’ around the discovery and the park archeologist will be notified through the NPS Contracting Officer for the contract. Human remains require immediate notification to the contract manager, park law enforcement, park archeologist, and County Coroner. Discoveries will require time for significance assessment, treatment definition, and consultation with appropriate NPS, tribal, and/or state and local agencies depending on the situation.

E. Archeological Monitor: Representative of the Government designated to oversee construction activities that could disturb archeological resources. Includes both National Park Service (NPS) and Federated Indians of Graton Rancheria (FIGR) personnel, and consultants employed by NPS and/or FIGR to perform archeological monitoring. See Section 3.2 for the authority of the

Archeological Monitor.

F. Archeological Resources Protection Act (ARPA) of 1979 (P.L. 96-95; 93 Stat. 712): defines archeological resources as any material remains of past human life or activities that are of archeological interest and at least 100 years old.

G. Federated Indians of Graton Rancheria (FIGR). The Graton Rancheria community is a federation of Coast Miwok and Southern Pomo groups recognized as a tribe by the US Congress. Indigenous habitants of the Stinson Beach area.

1.3 SUBMITTALS

A. Daily Work Schedule; Submit a Daily Work Schedule detailing construction work in archeologically sensitive areas. Submit to Contracting Officer 30 days before start of ground disturbing site work.

1.4 QUALITY ASSURANCE

A. At least one week before on-site work begins, Contractor shall meet with Contracting Officer and Archeological Monitor to discuss Daily Work Schedule and equipment and special methods to be used in any identified archeologically sensitive areas. Contractor shall ensure that approved Daily Work Schedule is followed throughout construction.

PART 2 - PRODUCTS

2.1 DAILY WORK SCHEDULE

A. A Daily Work Schedule is required for all work occurring within archeologically sensitive areas. Include all work that is to occur within the area and key the schedule to the drawings to include the following:
   1. Starting and ending dates of ground-disturbing, or other identified archeologically sensitive aspects of construction.
   2. Locations of temporary facilities, such as barriers, field offices, staging areas, sanitary facilities, borrow pits, and haul and access roads.
   3. Types of construction, such as clearing, topsoil stripping, structure or trench excavation, landscaping, and post construction clean-up.
   4. Methods and equipment used for each type of construction.
   5. Plan for relocating work in the event of temporary work stoppages at each archeologically sensitive area.

PART 3 - EXECUTION

3.1 BARRICADES

A. Comply with requirements specified Section 015600."

3.2 OBSERVATION

Archeological Monitor will observe all ground-disturbing or disruptive site work, including construction of temporary facilities, at all archeologically sensitive areas, from a safe location mutually agreed on by Contractor and Monitor. As new ground is broken, Monitor will examine excavated materials, using construction layout centerline and perimeter staking as a reference point to record locations of findings.

A. If during observation, the Archeological Monitor discovers what is a potential resource area, the Archeological Monitor has the authority to direct the contractor to:

1. Stop excavation as necessary;

2. Suspend construction for sufficient time to collect, photograph, map or otherwise document any features encountered during the course of work;

3. Avoid working within 50 feet of the area of the potential resource; and/or

4. Alter the way in which machinery is operated.

B. Where operations are requested to stop, the monitoring archaeologist will log the time, the action taken, and the duration of the stoppage. Work within the area may resume after NPS and FIGR have developed an appropriate mitigation strategy.

5.

3.3 DISCOVERY OF RESOURCES

A. If resources are discovered while Archeological Monitor is absent, stop work immediately and report the discovery to the Contracting Officer.

B. The Archaeological Monitor, through the Contracting Officer, will have the authority to suspend construction as noted in Section 3.2.A. Should human remains or archeological features be discovered during construction, all work will halt regardless of whether an Archeological Monitor is present.

C. If the significance and potential treatment of the discovery will alter the existing construction plans of the project, consultation between the Contractor, monitors, and park officials will be completed no later than 48 hours after discovery notification. A discovery may require consultation with the State Historic Preservation Office if a significant archeological resource will be adversely impacted.

D. If the Archeological Monitor discovers resources, immediate relocation of the work to a non-sensitive area may be required to allow Monitor to identify and document resources and, if necessary, develop an appropriate mitigation plan. While Archeological Monitor is documenting resources in sensitive areas, Contractor shall relocate work to non-sensitive areas where monitoring is not normally required.

3.4 WORK STOPPAGE

A. The Contractor shall plan, schedule, and execute the work to prevent stoppages at one area from stopping all work at the construction site.

END OF SECTION 01 35 13.22

SECTION 01 35 23 - SAFETY REQUIREMENTS

PART 1 - GENERAL

1.1 SUMMARY

A. This section includes establishing an effective accident prevention program and providing a safe environment for all personnel and visitors.

B. Hazardous Materials: The project site contains hazardous materials and contaminated soil beyond that specifically noted in the drawings and specifications delineated for remediation. The safety plan shall address appropriate training for all workers with any potential for exposure. See Specification Section 01 35 30 Hazardous Materials.

C. Site Specific Safety and Health Plan:

1. A Site Specific Safety and Health Plan shall be prepared covering on-site work to be performed by the contractor and all subcontractors.
2. The prime contractor shall be responsible for development, implementation, and oversight of the site specific plan. The site specific safety and health plan shall establish in detail, the protocols necessary for recognition, evaluation, and control of hazards associated with each task performed. The plan shall address site specific safety and health requirements and procedures based upon site specific conditions. The level of detail provided in the site specific safety and health plan shall be tailored to the type of work, complexity of operations to be performed, and hazards anticipated. The site specific safety and health plan shall address, in as much detail as possible, anticipated tasks, their related hazards, and anticipated control measures.
3. As work proceeds, the site specific safety and health plan shall be adapted to new situations and new conditions. Changes and modifications to the accepted site specific safety and health plan shall be made with the knowledge and concurrence of the safety office, site superintendent and Contracting Officer's Technical Representative (COR).

1.2 SUBMITTALS

A. Site Specific Safety and Health Plan (SSSHP): After contract award and before the Pre-Construction conference, submit for review a Site Specific Safety and Health Plan. The Contracting Officer (CO) will review the proposed Plan. If the plan requires any revisions or corrections, the Contractor shall resubmit the Plan within 10 days. No field work will be allowed until Plan is accepted.

1.3 QUALITY ASSURANCE

A. Comply with contract clauses entitled "Accident Prevention" and "Permits and Responsibilities". In case of conflicts between Federal, State, and local safety and health requirements, the most stringent shall apply. Equipment or tools not meeting OSHA requirements will not be allowed on the project sites. Failure to comply with the requirements of this section and related sections may result in suspension of work.

B. Qualifications of Employees:

1. If hazardous materials or contaminated soils are present, all employees must have the level of HAZWOPER training appropriate for the potential for contact with hazardous materials during the performance of their work.
2. All employees must be physically qualified and able to perform their assigned duties in a safe manner.
3. Do not allow employees to perform work whose ability or alertness is impaired because of prescription or illegal drug use, fatigue, illness, intoxication, or other conditions that may expose themselves or others to injury.
4. Operators of vehicles, hoisting equipment, and hazardous plant equipment shall be able to understand signs, signals, and operating instructions, and be fully capable of operating such equipment. Provide operating instructions for all equipment. Newly hired operators shall be individually tested by an experienced operator or supervisor to determine if they are capable of safely operating equipment. Retain copies of all operators' licenses and/or certifications onsite.

1.4 ACCIDENT REPORTING

A. Reportable Accidents: (per OSHA 29CFR 1904) A project reportable accident is defined as death, occupational disease, traumatic injury to employees or the public, fires, and property damage by accident in excess of $100. Notify Park Dispatch at 911 or 415-561-5656 to report the accident and request emergency assistance. In addition, Contractor will notify the Contracting Officer immediately in the event of a reportable accident. Within 7 days of a reportable accident, fill out and forward to Contracting Officer an Accident/Property Damage Report (Form CM-22). Form may be obtained from the Contracting Officer.

PART 2 - PRODUCTS

2.1 SITE SPECIFIC SAFETY AND HEALTH PLAN (SSSHP)

A. The Plan shall be written to comply with OSHA and must be specific to the project requirements (a generic plan is not acceptable), including but not limited to the following:

1. Signature Page. Identify the name, title, phone number and signature of the following: the plan preparer, the company representative authorized to approve the plan, the Project Manager/Superintendent, and the Project Safety Professional. On this page, the NPS Point of Contact should also be identified. (Note: with smaller companies, one individual might assume responsibility for multiple of these roles.)
2. Project Description. Include a brief description of the project, project phases, and a map of the general work location. Provide a list of major work tasks and submit a Job Hazard Analysis (JHA) or Phase Hazard Analysis (AHA) for each major task or phase.
   a. Identify how the public will be protected during the contract work. Often pedestrian, traffic control and/or signage are key issues on project sites. Depending on the project and site, sometimes a formal Traffic Management Plan is needed. Details on traffic control may be required or attached to the submittal and available for review.
   b. Some projects or phases within the project, such as trenching and excavation, demolition, lead and asbestos remediation, etc. require further planning or separate

specific plans within themselves; and may also need to include a designated competent person to oversee the work. Should this situation arise, these additional aspects or items will also need to be addressed or attached with the plan; competent person(s) will need to be identified along with documentation or evidence detailing their competency and/or their skill level.

3. Subcontractors. Identify subcontractors and suppliers (if known) who will be on site, means for controlling and coordinating with subcontractors and suppliers, and the safety responsibilities of subcontractors and suppliers.
4. Reporting. Identify requirements of reporting workplace accidents both internally and to the NPS, who will conduct accident investigations, procedures for conducting an investigation, and how they will be reported.
5. Safety Training.
   a. Identify the person(s) responsible for maintaining training records.
   b. Identify required certifications for the work of the project, such as : First Aid/CPR, lead/asbestos worker, scaffolding, fall protection, etc., and attach such certifications or provide for review.
   c. List mandatory training topics which are applicable to the project, such as excavation, fall protection, scaffolding, hazard communication, confined space, respiratory protection, and personal protective equipment. Identify training elements for these topics and how training will be carried out.
   d. Provide any requirements for periodic training, such as daily/weekly tailgate sessions.
   e. Provide an overview of policies and procedures regarding employee noncompliance with safety requirements and holding personnel accountable for safety.
   f. If machinery and mechanized equipment will be used on site, the contractor should develop a section in the site safety plan to include, but not limited to, identifying a competent person who will inspect all equipment prior to it being brought on site, identifying who will perform daily inspections of the equipment, training requirements for use of equipment, seat belt requirements, personnel qualifications for operating the equipment, safe operating instructions, parking and overnight storing requirements, guarding and safety devices.
6. Site Safety Inspections. Address requirements for site safety inspections, including but not limited to: inspection frequency, name(s) of individuals who are responsible for conducting safety inspections, procedures for performing inspections, documentation and recording of corrective action requirements. Additionally, this section should also provide details on any external inspections/certifications which may be required (e.g., Coast Guard, various environmental surveying, etc.)
7. Site Sanitation. Include a section on sanitation addressing jobsite housekeeping, toilet facility requirements, hand washing requirements, drinking water availability, and any other requirements that may be applicable to this project.
8. PPE. The safety plan should include a section on Personnel Protective Equipment (PPE). Provide an overview explaining the requirements and responsibilities for each employee to wear the appropriate PPE in all operations where there is an exposure to hazardous conditions, or where the need for using such equipment to reduce the hazards to the employees is required. Details in this section should include, but may not be limited to outlining procedures (who, when, how) for conducting the hazard analysis to determine PPE needs, assessment or certification of PPE to be used, the care, treatment and proper storage of PPE, etc.

9. Emergencies. Identify emergency contacts for the project and provide the name, phone number, map and driving directions from the worksite to the nearest hospital/emergency medical facility. The contractor should also address requirements for administering first aid, including training requirements and providing certifications of those who will administer first aid or CPR.
10. Fire. Provide information on fire protection and prevention. Include a list of the major workplace fire hazards specific to the project, potential ignition sources, the types of fire suppression equipment or systems appropriate to the control of fire, assignments of responsibilities for maintaining the equipment and systems, and personnel responsible for controlling the fuel source hazards.
11. Hazard Communications. If chemicals will be used or brought on site during the course of this project, develop a section regarding Hazard Communication, provide or make available documentation that employees have received Hazard Communication training, and attach or make available copies of Safety Data Sheets (SDS) for each hazardous material that will be onsite.
12. Severe Weather. Develop a Contingency Plan for Severe Weather. The section should outline procedures addressing each potential severe weather event that is likely to occur at the project site, such as heavy rain, high winds, coastal flooding, fires, slides, power outages, etc. Such planning shall take into consideration the nature of construction, site conditions, and degree of exposure for persons and property.
13. Laydown Area. If the project will require a laydown area for materials, equipment, etc. a section detailing this aspect should be provided.

2.2 FIRST AID FACILITIES

A. Provide adequate facilities for the number of employees and the hazards associated with the types of ongoing construction work at the site.

2.3 PERSONNEL PROTECTIVE EQUIPMENT

A. Meet requirements of applicable ANSI standards. Selection shall conform to OSHA 29CFR 1926.95 Subpart E.

PART 3 - EXECUTION

3.1 EMERGENCY INSTRUCTIONS

A. Post telephone numbers and reporting instructions for ambulance, physician, hospital, fire department, and police in conspicuous locations at the work site.

3.2 FIRE AND LIFE SAFETY

A. Comply with the requirements of NFPA 241 (Standard for Safeguarding Construction, Alteration, and Demolition Operations).

B. Store hazardous materials in accordance with manufacturer's and OSHA recommendations. Maintain readily available, on site, SDS for each chemical.

1. Immediately report all spills of hazardous materials to the park.
2. Maintain a spill emergency response kit.
3. Train employees how to respond to a spill and use the emergency response kit.

3.3 PROTECTIVE EQUIPMENT

A. Inspect personal protective equipment daily and maintain in a serviceable condition. Clean, sanitize, and repair personal items, as appropriate, before issuing them to another individual.

B. Inspect and maintain other protective equipment and devices before use and on a periodic basis to ensure safe operation. Retain inspection documentation onsite.

3.4 SAFETY MEETINGS

A. As a minimum, conduct weekly 15-minute "toolbox" safety meetings. These meetings shall be conducted by a foreman or supervisor and attended by all construction personnel at the worksite. Topics need to coincide with work scheduled for the following week. Document and submit meeting minutes to the Contracting Officer within one day after the meeting.

B. Conduct monthly safety meetings for all levels of supervision. Meetings shall be attended by all contractors and subcontractors performing work on the site. Notify the Contracting Officer of meeting dates and times. These meetings shall be used to review the effectiveness of the Contractor's safety effort, to resolve current health and safety problems, to provide a forum for planning safe construction activities, and for updating the Site Specific Safety and Health Plan. The Contracting Officer will attend the meeting and enter the results of the meetings into the daily log. These meetings can be incorporated into weekly site meetings with the approval of the CO.

3.5 HARD HATS AND PROTECTIVE EQUIPMENT AREAS

A. A hard hat area shall be designated by the Contractor. The hard hat area shall be posted by the Contractor in a manner satisfactory to the Contracting Officer.

B. It is the Contractor's responsibility to require all those working on or visiting the site to wear hard hats and other necessary personal protective equipment at all times. As a minimum, provide **four** hard hats and all other SSSHP required equipment for use by visitors.

3.6 TRAINING

A. First Aid: Provide adequate training to an adequate number of personnel to ensure prompt and efficient first aid.

B. Hazardous Material: Train and instruct each employee exposed to hazardous material in safe and approved methods of handling and storage. All employees must be provided with the level of Hazardous Waste Operations and Emergency Response Standards (HAZWOPER) training

appropriate for the potential for contact with hazardous materials during the performance of their work. Hazardous materials are defined as explosive, flammable, poisonous, corrosive, oxidizing, irritating, or otherwise harmful substances that could cause death or injury.

END OF SECTION 01 3523

SECTION 01 60 00 – SOILS MANAGEMENT

PART 1 - GENERAL

1.1 SUMMARY

A. This Section describes requirements on managing soil materials including disposal of excess soils and importing soil materials, proper staging and stockpiling methods

B. Excavated Soil and Stockpile management includes, but is not limited to preparing and maintaining stockpile areas as needed, transferring soils from active excavation areas to stockpiles or active loading zones, final loading into haul trucks, and any additional interim handling between excavation and transportation offsite.

C. Transfer of soils to and from the active excavation areas to the designated stockpile area approved by CO may be achieved using equipment approved by the CO, such as belt style conveyor, off road track dump trucks, Morooka Carriers, and small trucks. Contractor may submit other means and methods for soil transfer and conveyance subject to CO approval.

D. See Section 01 50 02 Trucking disposal of removal of non-contaminated soils.

1.2 DEFINITIONS

1. Earth materials include all types of sand, soil and rock used for backfilling, recontouring for habitat or historic restorations, top-dressing for revegetation areas, rock for structural purposes, and aggregate for road and trail tread. All rock and soil that is generated during construction from activities such as excavation and scraping are also earth materials. Some commonly used EM definitions:
2. Aggregate Base Rock: Typically composed of crushed rock particles that fit through a ¾inch screen, this includes fine particles. Most often used to form a solid base for roads, parking areas, trails, structures, etc. Aggregate base rock is tested differently than drain rock or big rock.
3. Drain Rock: Clean aggregate most often used for drainage, it applies to rocks of different sizes and should have minimal fines.
4. Fines: Very small soil particles that can pass through a #200 sieve, or 75 ug.
5. Rip Rap: Large rock used for drainage, erosion control, and structural purposes.
6. Trail Tread: rock and fines screened to 1" minus (The allowable size for tread is partially based on what level of accessibility is required. This is for an AGODA, or outdoor accessible, trail). This can be chert, but it can also be shale or other EMS purchased from quarries.
7. Tread Base: 1" to 3" angular rock, used in moist areas as a minor drain lens.
8. Drain Lens Base Rock: 3" to 6" angular rock placed beneath the tread base, for wet areas or areas that have increased drainage needs in the winter.
9. Drain Lens Drain Rock: 6" to 12" angular rock is used as a base in wetland areas where there is significant movement of water.

10. Class Il Designated Landfill Waste. Soil which cannot be reused onsite, but is not classified as a hazardous waste under federal or State law
11. Sand: Unconsolidated grains of rock that are less .08” but more than .006” in diameter.
12. Topsoil/Organic Material: Native, upper layer of soil with high concentration of organic matter and microorganisms.

1.3 SUBMITTALS

A. Close Out Submittals - Provide As-Builts showing placement location of all imported materials.

PART 2 - PRODUCTS

2.1 IMPORTED FILL

A. Meet the following standards for import fill material:
1. Shall be free of organic matter, trash. concrete rubble and other deleterious material.
2. Shall be uncontaminated by regulated materials
3. Approved by the Park Contracting Officer or Natural Resources Supervisor.

B. Conform to the following chemical limit requirements for import fill material:

Constituent	Limit	Units
Inorganic Chemical Constituents		
Antimony	5	mg/kg
Arsenic	5.4	mg/kg
Barium	320	mg/kg
Beryllium	10	mg/kg
Cadmium	0.8	mg/kg
Chromium	140	mg/kg
Cobalt	21	mg/kg
Copper	49	mg/kg
Cyanide	2,500	mg/kg
Lead	160	mg/kg
Tetraethyl Lead	0.013	mg/kg
Mercury	0.4	mg/kg
Molybdenum	12	mg/kg

Nickel	110	mg/kg
Selenium	0.5	mg/kg
Silver	2	mg/kg
Thallium	1	mg/kg
Vanadium	74	mg/kg
Zinc	60	mg/kg
Semivolatile Organic Compounds		
Acenaphthene	30	mg/kg
Acenaphthylene	30	mg/kg
Anthracene	30	mg/kg
Benzo(a)anthracene	0.46	mg/kg
Benzo(a)pyrene	0.046	mg/kg
Benzo(b)fluoranthene	0.46	mg/kg
Benzo(g,h,i)perlene	30	mg/kg
Benzo(k)fluoranthene	4.6	mg/kg
BenzyAlcohol	1	mg/kg
Chrysene	30	mg/kg
Dibenzo(a,h,)anthracene	0.046	mg/kg
Dibenzofuran	2,200	mg/kg
Fluoranthene	30	mg/kg
Fluorene	30	mg/kg
Indeno(1,2,3)pyrene	0.46	mg/kg
2-Methylnaphthalene	30	mg/kg
4-Methylphenol (p-Creso)	50	mg/kg
Naphthalene	30	mg/kg
n-Nitrosodiphenylamine	20	mg/kg
Pentachlorophenol	3	mg/kg
Phenanthrene	30	mg/kg
Phenol	30	mg/kg

Pyrene	30	mg/kg
Volatile Organic Compounds		
Acetone	0.24	mg/kg
2-Butanone (MEK)	3.8	mg/kg
CarbonDisulfide	200	mg/kg
1,4-Dichlorobenzene	0.59	mg/kg
p-Isopropyltoluene (p-cymene)	130	mg/kg
MethyleneChloride	0.076	mg/kg
1,2.3-Trichlorobenzene	15	mg/kg
1,2.4-Trichlorobenzene	15	mg/kg
Trichlorofluoromethane	80	mg/kg
1,1,1-Trichloroethane	8	mg/kg
PolychlorinatedBiphenols (PCBs) Pesticides and Herbicides		
PCBs(Arochlor1254)	0.033	mg/kg
Aldrin	0.0039	mg/kg
alpha-BHC	0.062	mg/kg
beta-BHC	0.062	mg/kg
delta-BHC	0.062	mg/kg
Chlordane	0.009	mg/kg
2,4-D	0.025	mg/kg m 1k
Dicamba	0.01	mg/kg
4,4'-DDD	0.049	mg/kg
4,4'-DDE	0.098	mg/kg
4,4'-DDT	0.0082	mg/kg
Dieldrin	0.039	mg/kg
Endosulfan	1.1	mg/kg
Endosulfansulfate	1.1	mg/kg
Endrin	0.004	mg/kg
Endrinaldehyde	0.004	mg/kg
Endrinketone	0.004	mg/kg

gamma-BHC (Lindane)	0.01	mg/kg
Heptachlor	0.017	mg/kg
Heptachlorepoxide	0.017	mg/kg
Isodrin	0.0039	mg/kg
MCPP	5	mg/kg
Methoxychlor	0.44	mg/kg
Petroleum Hydrocarbons and Constituents		
TPH (as diesel)	100 (a)	mg/kg
TPH (as gasoline)	100(a)	mg/kg
TPH (as fuel oil/motor oil)	100(a)	mg/kg
Benzene	0.005(a)	mg/kg
Ethylbenzene	0.005(a)	mg/kg
Toluene	0.005(a)	mg/kg
TotalXylenes	0.005(a)	mg/kg
Dioxins/Furans		
2,3,7,8-TCDD		

Notes:

(a) From California Regional Water Quality Control Board, San Francisco Bay Region Order No,R2-20030080

C. All proposed testing of potential import material shall be consistent with testing requirements of the California Department of Toxic Substances Control (DTSC), including the DTSC Fact Sheet. Information Advisory, Clean Imported Fill Material, (October 2001.).

PART 3 - EXECUTION

3.1 Testing Imported Soil:

A. Should imported soil be required, all proposed testing of potential import material shall be consistent with testing requirements of DTSC, including the DTSC Fact Sheet Information Advisory, Clean Imported Fill Material, (October 2001.).

B. The Contractor shall ensure that all environmental sampling work is conducted and supervised by individuals and/or a subcontract firm holding the appropriate and applicable technical and professional credentials and/or licenses required by the State of California as necessary.

C. The Contractor shall ensure that any environmental sampling the contractor conducts follows EPA, California and American Society of Testing and Materials protocols and guidance

D. A sampling plan will be prepared and submitted to the CO for approval prior to collection and analysis of any samples of proposed import materials for any materials not already listed as pre-approved.

3.2 Non-native Invasive Species Control

A. See Sections 10 34 00 Natural Habitat Requirements, 01 45 00 Environmental Protection, and 01 50 02 Trucking.

3.3 Staging and Stockpiling

A. Stockpile Location(s): As indicated on plans and/or approved by Contracting Officer or Natural Resources Supervisor.

1. Distance stockpiles from storm water flows.
2. Stockpile soil materials away from edge of excavations. Do not store within drip line of remaining trees.
3. Protect downstream perimeter of active stockpile with linear sediment barrier.
4. Stockpile borrow soil materials and excavated satisfactory soil materials in approved locations without intermixing.
5. Cover and secure to prevent windblown dust.

B. Stockpile Requirements:

1. Use of plastic sheeting and photodegradable plastics are prohibited.
2. Contain and protect stockpile from wind and rain unless actively being used.
3. Do not exceed maximum height of 36” for windrows.

C. Reuse of Excavated Soil Materials within Stinson Beach allowed with prior review and approval by the Contracting Officer.

END OF SECTION 01 60 00.

SECTION 01 73 29 - CUTTING AND PATCHING

PART 1 - GENERAL

1.1 SUMMARY

A. Section includes procedural requirements for cutting and patching on buildings or sitework that do not contain Historic Fabric.

1.2 SUBMITTALS

A. Cutting and Patching Plan: Submit Plan describing procedures at least 10 business days before cutting and patching will be performed, requesting approval to proceed. Include:

1. Extent: Describe cutting and patching, show how performed, and indicate why they cannot be avoided.
2. Changes to In-Place Construction: Describe anticipated results. Include changes to structural elements and operating components as well as changes in building's appearance and other significant visual elements.
3. Products: List products to be used and firms or entities that will perform Work.
4. Dates: Indicate when cutting and patching will be performed.
5. Utility Services and Mechanical/Electrical Systems: List services/systems that cutting and patching procedures will disturb or affect. List services/systems that will be relocated and those that will be temporarily out of service. Indicate how long services/systems will be disrupted.
6. Structural Elements: Where cutting and patching involve adding reinforcement to structural elements, submit details and engineering calculations showing integration of reinforcement with original structure. Do not cut and patch structural elements in a manner that could change their load carrying capacity or increase deflection.
7. Contracting Officer’s (CO) Approval: Obtain approval of cutting and patching plan before cutting and patching. Approval does not waive right to later require removal and replacement of unsatisfactory work.

1.3 QUALITY ASSURANCE

A. Structural Elements: Do not cut and patch structural elements in a manner that could change their load-carrying capacity or load-deflection ratio.

B. Operational Elements: Do not cut and patch operating elements and related components in a manner that results in reducing their capacity to perform as intended or that results in increased maintenance or decreased operational life or safety.

C. Miscellaneous Elements: Do not cut and patch miscellaneous elements or related components in a manner that could change their load-carrying capacity, that results in reducing their capacity to perform as intended, or that results in increased maintenance or decreased operational life or safety. Miscellaneous elements include the following:

1. Asphalt paved access drive.

D. Visual Requirements: Do not cut and patch construction in a manner that results in visual evidence of cutting and patching. Do not cut and patch construction exposed on exterior or in occupied spaces in a manner that would, in Contracting Officer's opinion, reduce the building's aesthetic qualities. Remove and replace construction that has been cut and patched in a visually unsatisfactory manner.

1.4 WARRANTY

A. Existing Warranties: Remove, replace, patch, and repair materials and surfaces cut or damaged during cutting and patching operations, by methods and with materials so as not to void existing warranties.

PART 2 - PRODUCTS

2.1 MATERIALS

A. In-Place Materials: Use materials identical to in-place materials. For exposed surfaces, use materials that visually match in-place adjacent surfaces to the fullest extent possible.

1. If identical materials are unavailable or cannot be used, use materials that will match the visual and functional performance of in-place materials when installed.

PART 3 - EXECUTION

3.1 EXAMINATION

A. Examine surfaces to be cut and patched and conditions under which cutting and patching are to be performed.

1. Compatibility: Before patching, verify compatibility with and suitability of substrates, including compatibility with in-place finishes or primers.
2. Proceed with installation only after unsafe or unsatisfactory conditions have been corrected.

3.2 PREPARATION

A. Temporary Support: Provide temporary support of Work to be cut.

B. Protection: Protect in-place construction during cutting and patching to prevent damage. Provide protection from adverse weather conditions for portions of Project that might be exposed during cutting and patching operations.

C. Adjoining Areas: Avoid interference with use of adjoining areas or interruption of free passage to adjoining areas.

D. Existing Utility Services and Mechanical/Electrical Systems: Where existing services/systems are required to be removed, relocated, or abandoned, bypass such services/systems before cutting to prevent interruption to occupied areas.

3.3 PERFORMANCE

A. General: Employ skilled workers to perform cutting and patching. Proceed with cutting and patching at earliest feasible time. Complete without delay.

1. Cut in-place construction to provide for installation of other components or performance of other construction subsequently. Patch as required to restore surfaces to original condition.

B. Cutting: Cut in-place construction by sawing, drilling, breaking, chipping, grinding, and similar operations, including excavation, using methods least likely to damage elements retained or adjoining construction. If possible, review proposed procedures with original Installer and original Installer's written recommendations.

1. In general, use hand or small power tools designed for sawing and grinding, not hammering and chopping. Cut holes and slots as small as possible, neatly to size required, and with minimum disturbance of adjacent surfaces. Temporarily cover openings when not in use.
2. Finished Surfaces: Cut or drill from exposed or finished side into concealed surfaces.
3. Concrete: Cut using an abrasive saw or a diamond-core drill.
4. Excavating and Backfilling: Comply with requirements in applicable Division 31 Sections where required by cutting and patching operations.
5. Mechanical and Electrical Services: Cut off pipe or conduit in walls or partitions to be removed. cap, valve, or plug and seal remaining portion of pipe or conduit to prevent entrance of moisture or other foreign matter after cutting.
6. Proceed with patching after construction operations cutting are complete.

C. Patching: Patch construction by filling, repairing, refinishing, closing up, and similar operations following performance of other Work. Patch with durable seams as invisible as possible. Provide materials and comply with installation requirements specified in other Sections.

1. Inspection: Where feasible, test and inspect patched areas after completion to demonstrate integrity of installation.
2. Exposed Finishes: Restore exposed finishes of patched areas and extend finish restoration into retained adjoining construction in a manner that will eliminate evidence of patching and refinishing.
3. Floors and Walls: Where walls or partitions that are removed extend one finished area into another. Patch and repair floor and wall surfaces in new space. Provide an even surface of uniform finish, color, texture, and appearance. Remove in-place floor and wall coverings and replace with new materials, if necessary~~,~~ to achieve uniform color and appearance.
4. Ceilings: Patch, repair, or re-hang in-place ceilings as necessary to provide an even-plane surface of uniform appearance.
5. Exterior Building Enclosure: Patch components in a manner that restores enclosure to a weather tight condition.

D. Cleaning: Clean areas and spaces where cutting and patching are performed. Remove paint, mortar, oils, putty, and similar materials.

END OF SECTION 01 73 29

SECTION 01 73 40 - EXECUTION

PART 1 - GENERAL

1.1 SUMMARY

A. This Section includes general procedural requirements governing execution of the Work including, but not limited to, the following:

1. Coordination with utility service providers.
2. Construction layout.
3. Field engineering and surveying.
4. Testing
5. General installation of products.
6. Quantity Surveys.
7. Progress cleaning.
8. Starting and adjusting.
9. Protection of installed construction.
10. Correction of the Work.

1.2 SUBMITTALS

A. Certificates: Submit certificate signed by land surveyor certifying that location and elevation of improvements comply with requirements.

B. Landfill Receipts: Submit copy of receipts issued by a landfill facility, licensed to accept hazardous materials, for hazardous waste disposal.

C. Certified Surveys: Submit two copies signed by land surveyor.

D. Test Results: Submit 3 copies signed by testing agency; including but not limited to Special Structural, Plumbing & Electrical Engineers tests, Window water infiltration tests.

E. Quantity Surveys: Submit 2 copies showing quantities of work performed and actual construction completed and in place.

1.3 QUALITY ASSURANCE

A. Land Surveyor Qualifications: A professional land surveyor who is legally qualified to practice in jurisdiction where Project is located and who is experienced in providing land-surveying services of the kind indicated.

PART 2 - PRODUCTS (Not Used)

PART 3 - EXECUTION

3.1 EXAMINATION

A. Existing Conditions: The existence and location of site improvements, and other construction indicated as existing are not guaranteed.

1. Before construction, verify the location and points of connection of utility services.

2. Before construction, verify the location and elevation of dunes and significant dune vegetation with the limits of construction as indicated on the Drawings.

B. Existing Utilities: The existence and location of underground and other utilities and construction indicated as existing are not guaranteed. Before beginning sitework, investigate and verify the existence and location of underground utilities and other construction affecting the Work.

1. Before construction, verify the location and invert elevation at points of connection of sanitary sewer, storm sewer, and water-service piping; and underground electrical services.
2. Furnish location data for work related to Project that must be performed by public utilities serving Project site.

C. Acceptance of Conditions: Examine substrates, areas, and conditions, with Installer or Applicator present where indicated, for compliance with requirements for installation tolerances and other conditions affecting performance. Record observations.

1. Verify compatibility with and suitability of substrates, including compatibility with existing finishes or primers.
2. Examine roughing-in for mechanical and electrical systems to verify actual locations of connections before equipment and fixture installation.
3. Examine walls, floors, and roofs for suitable conditions where products and systems are to be installed.
4. Proceed with installation only after unsatisfactory conditions have been corrected. Proceeding with the Work indicates acceptance of surfaces and conditions.

3.2 COORDINATION WITH UTILITY SERVICE PROVIDERS

A. Coordination with Utility Service Providers: Contact the following Utility Service providers, sufficiently in advance to avoid delaying the work, to coordinate the contractor's portion of the work, testing requirements, inspections, etc**.**

1. Electrical: Service Contact: Contact PG&E to coordinate Electrical service requirements.

a. Construction Contractor Responsibilities: Contractor is responsible for coordinating increased service and transformer with PG&E. Contractor is responsible for all utility coordination and any scope associated with temporary shutdowns.

2. Water Service Contact: Contact Stinson Beach County Water District to coordinate Water service requirements.

   a. Construction Contractor Responsibilities: Contractor is responsible for maintaining adequate water pressure to existing fire-fighting hydrants through project construction. Contractor is responsible for all utility coordination and any scope associated with temporary shutdowns.

3. Wastewater Service Contact: Contact NPS North District Utilies department to coordinate Wastewater service requirements.
   a. Construction Contractor Responsibilities: Contractor is responsible for all utility coordination and any scope associated with temporary shutdowns.

B. Field Measurements: Take field measurements as required to fit the Work properly. Recheck measurements before installing each product. Where portions of the Work are indicated to fit to other construction, verify dimensions of other construction by field measurements before fabrication. Coordinate fabrication schedule with construction progress to avoid delaying the Work.

C. Space Requirements: Verify space requirements and dimensions of items shown diagrammatically on Drawings.

D. Review of Contract Documents and Field Conditions: Immediately on discovery of the need for clarification of the Contract Documents caused by differing field conditions outside the control of the Contractor, submit a request for information to the Contracting Officer in accordance with Division 01 Specification 01 31 00 “Project Management and Coordination”.

3.3 CONSTRUCTION LAYOUT

A. Verification: Before proceeding to lay out the Work, verify layout information shown on Drawings, in relation to the existing benchmarks. If discrepancies are discovered, notify Contracting Officer promptly.

B. General: Engage a land surveyor to lay out the Work using accepted surveying practices.

1. Establish benchmarks and control points to set lines of construction and elsewhere as needed to locate each element of Project.
2. Establish dimensions within tolerances indicated. Do not scale Drawings to obtain required dimensions.
3. Inform installers of lines and levels to which they must comply.
4. Check the location, level and plumb, of every major element as the Work progresses.
5. Notify the Contracting Officer when deviations from required lines and levels exceed allowable tolerances.
6. Close site surveys with an error of closure equal to or less than the established standard.

C. Site Improvements: Locate and lay out site improvements, including pavements, grading, fill and topsoil placement, utility slopes, and invert elevations.

D. Building Lines and Levels: Locate and lay out control lines and levels for structures, building foundations, column grids, and floor levels, including those required for mechanical and electrical work. Transfer survey markings and elevations for use with control lines and levels. Level foundations and piers from two or more locations.

E. Record Log: Maintain a log of layout control work. Record deviations from required lines and levels. Include beginning and ending dates and times of surveys, weather conditions, name and duty of each survey party member, and types of instruments and tapes used. Make the log available for reference by NPS.

3.4 FIELD ENGINEERING

A. Reference Points: Locate existing permanent benchmarks, control points, and similar reference points before beginning the Work. Preserve and protect permanent benchmarks and control points during construction operations. Controls that are destroyed by Contractor will be replaced by the Contractor at their expense.

B. Existing Monuments: All bench marks, land corners, and triangulation points, established by other surveys, existing within the construction area shall be preserved. If existing monuments interfere with the work, secure written permission before removing them.

C. Benchmarks: Establish and maintain a minimum of **two** (2) permanent intervisible control monuments on Project site, with reference to NAD83 2011 CA State Plane Z3 feet coordinate system. . . Monument cap shall be aluminum or bronze and of sufficient size to accommodate a monument ID and other identifying information. Include ceramic magnet and/or ferrous metal post to facilitate locating by metal detector.

1. Record benchmark locations, with horizontal and vertical data, on Project Record Documents. Establish benchmark in OPUS (National Geodetic Survey, Online Positioning User Service) and include data sheet in record documents. **Certified Survey:** On completion of foundation walls, major site improvements, and other work requiring field-engineering services, prepare a certified survey showing dimensions, locations, angles, and elevations of construction and sitework.

3.5 INSTALLATION

A. General: Locate the Work and components of the Work accurately, in correct alignment and elevation, as indicated.

1. Make vertical work plumb and make horizontal work level.
2. Where space is limited, install components to maximize space available for maintenance and ease of removal for replacement.
3. Conceal pipes, ducts, and wiring in finished areas, unless otherwise indicated.

B. Comply with manufacturer's written instructions and recommendations for installing products in applications indicated.

C. Install products at the time and under conditions that will ensure the best possible results. Maintain conditions required for product performance until Substantial Completion.

D. Conduct construction operations so no part of the Work is subjected to damaging operations or loading in excess of that expected during normal conditions of occupancy.

E. Tools and Equipment: Do not use tools or equipment that produce harmful noise levels.

F. Templates: Obtain and distribute to the parties involved templates for work specified to be factory prepared and field installed. Check Shop Drawings of other work to confirm that adequate provisions are made for locating and installing products to comply with indicated requirements.

G. Anchors and Fasteners: Provide anchors and fasteners as required to anchor each component securely in place, accurately located and aligned with other portions of the Work.

1. Mounting Heights: Where mounting heights are not indicated, mount components at heights directed by the Contracting Officer.
2. Allow for building movement, including thermal expansion and contraction.
3. Coordinate installation of anchorages. Furnish setting drawings, templates, and directions for installing anchorages, including sleeves, concrete INSERTs, anchor bolts, and items with integral anchors, that are to be embedded in concrete or masonry. Deliver such items to Project site in time for installation.

H. Joints: Make joints of uniform width. Where joint locations in exposed work are not indicated, arrange joints for the best visual effect. Fit exposed connections together to form hairline joints.

I. Hazardous Materials: Use products, cleaners, and installation materials that are not considered hazardous and meet the Affirmative Procurement requirement of Section 01 6700.

J. Quantity surveys: Shall be conducted, and the data derived from these surveys shall be used in computing the quantities of work performed and the actual construction completed and in place.

1. The Contractor shall conduct the original and final surveys and surveys for any periods for which progress payments are requested. All these surveys shall be conducted under the direction of a representative of the Contracting Officer, unless the Contracting Officer waives this requirement in a specific instance. The Government shall make such computations as are necessary to determine the quantities of work performed or finally in place. The Contractor shall make the computations based on the surveys for any periods for which progress payments are requested.
2. Promptly upon completing a survey, the Contractor shall furnish the originals of all field notes and all other records relating to the survey or to the layout of the work to the Contracting Officer, who shall use them as necessary to determine the amount of progress payments. The Contractor shall retain copies of all such material furnished to the Contracting Officer.

3.6 PROGRESS CLEANING

A. General: Clean Project site and work areas daily, including common areas. Coordinate progress cleaning for joint-use areas where more than one installer has worked. Enforce requirements strictly. Dispose of materials lawfully.

1. Comply with requirements in NFPA 241 for removal of combustible waste materials and debris.
2. Do not hold materials more than 7 days during normal weather or 3 days if the temperature is expected to rise above 80 deg F.
3. Containerize hazardous and unsanitary waste materials separately from other waste. Mark containers appropriately and dispose of legally, according to regulations. See Specification Section 01 3530 Hazardous Materials.

B. Site: Maintain Project site free of waste materials and debris.

C. Work Areas: Clean areas where work is in progress to the level of cleanliness necessary for proper execution of the Work.

1. Remove liquid spills promptly.
2. Where dust would impair proper execution of the Work, broom-clean or vacuum the entire work area, as appropriate.
3. Contractor shall provide progress cleaning that minimizes sources of food, water, and harborage available to pests.

D. Installed Work: Keep installed work clean. Clean installed surfaces according to written instructions of manufacturer or fabricator of product installed, using only cleaning materials specifically recommended. If specific cleaning materials are not recommended, use cleaning materials that are not hazardous to health or property and that will not damage exposed surfaces.

1. Utilize non-toxic cleaning materials and methods.

a. Comply with Green Seal GS 37 for general purpose cleaning and bathroom cleaning.
b. Use natural cleaning materials where feasible. Natural cleaning materials include:

1) Abrasive cleaners: substitute 1/2 lemon dipped in borax.
2) Ammonia: substitute vinegar, salt and water mixture, or baking soda and water.
3) Disinfectants: substitute 1/2 cup borax in gallon water.
4) Drain cleaners: substitute 1/4 cup baking soda and 1/4 cup vinegar in boiling water.

E. Concealed Spaces: Remove debris from concealed spaces before enclosing the space.

F. Exposed Surfaces in Finished Areas: Clean exposed surfaces and protect as necessary to ensure freedom from damage and deterioration at time of Substantial Completion.

G. Waste Disposal: Burying or burning waste materials on-site will not be permitted. Washing waste materials down sewers or into waterways will not be permitted.

H. During handling and installation, clean and protect construction in progress and adjoining materials already in place. Apply protective covering where required to ensure protection from damage or deterioration at Substantial Completion.

I. Clean and provide maintenance on completed construction as frequently as necessary through the remainder of the construction period. Adjust and lubricate operable components to ensure operability without damaging effects.

J. Limiting Exposures: Supervise construction operations to assure that no part of the construction completed or in progress, is subject to harmful, dangerous, damaging, or otherwise deleterious exposure during the construction period.

K. Final Cleaning: At completion of Work, remove all remaining waste materials, rubbish, tools, equipment, machinery and surplus materials, and clean all exposed surfaces; leave Project clean and ready for occupancy.

1. Provide final cleaning in accordance with ASTM E1971.

3.7 STARTING AND ADJUSTING

A. Start equipment and operating components to confirm proper operation. Remove malfunctioning units, replace with new units, and retest.

B. Adjust operating components for proper operation without binding. Adjust equipment for proper operation.

C. Test each piece of equipment to verify proper operation. Test and adjust controls and safeties. Replace damaged and malfunctioning controls and equipment.

D. Manufacturer's Field Service: If a factory-authorized service representative is required to inspect field-assembled components and equipment installation, comply with qualification requirements in Division 01 Section "Quality Requirements."

3.8 PROTECTION OF INSTALLED CONSTRUCTION

A. Provide final protection and maintain conditions that ensure installed Work is without damage or deterioration at time of Substantial Completion.

B. Comply with manufacturer's written instructions for temperature and relative humidity.

3.9 CORRECTION OF THE WORK

A. Repair or remove and replace defective construction. Restore damaged substrates and finishes. Comply with requirements in Division 01 Section "Cutting and Patching."

1. Repairing includes replacing defective parts, refinishing damaged surfaces, touching up with matching materials, and properly adjusting operating equipment.

B. Restore permanent facilities used during construction to their specified condition.

C. Remove and replace damaged surfaces that are exposed to view if surfaces cannot be repaired without visible evidence of repair.

D. Repair components that do not operate properly. Remove and replace operating components that cannot be repaired.

E. Remove and replace chipped, scratched, and broken glass or reflective surfaces.

END OF SECTION 01 73 40

SECTION 01 74 19 - CONSTRUCTION WASTE MANAGEMENT AND DISPOSAL

PART 1 - GENERAL

1.1 SUMMARY

A. This Section includes administrative and procedural requirements for the following:

1. Recycling nonhazardous demolition and construction waste.
2. Disposing of nonhazardous demolition and construction waste.

B. See section 01 35 30 Hazardous Materials regarding Hazardous material waste disposal.

1.2 DEFINITIONS

A. Construction Waste: Building and site improvement materials and other solid waste resulting from construction, remodeling, renovation, or repair operations. Construction waste includes packaging.

B. Demolition Waste: Building and site improvement materials resulting from demolition or selective demolition operations.

C. Deconstruction: A process to carefully dismantle or remove and salvage usable materials from structures, as an alternative to demolition. It maximizes the recovery of building materials for reuse and recycling and minimizes the amount of waste going to a landfill. Typical deconstruction includes taking the building apart to reuse lumber, windows, doors, and other materials.

D. Solid Waste: Garbage, debris, sludge, or other discharged material (except hazardous waste) including solid, liquid, semisolid, or contained gaseous materials resulting from domestic, industrial, commercial, mining, or agricultural operations.

E. Debris: Non-hazardous solid waste generated during the construction, demolition, or renovation of a structure which exceeds 2.5 inch (60 mm) particle size that is: a manufactured object; plant or animal matter; or natural geologic material (e.g. cobbles and boulders). A mixture of debris and other material such as soil or sludge is also subject to regulation as debris if the mixture is comprised primarily of debris by volume, based on visual inspection.

F. Disposal: Removal off-site of demolition and construction waste and subsequent sale, recycling, reuse, or deposit in landfill or incinerator acceptable to authorities having jurisdiction.

G. Environmental Pollution and Damage: The presence of chemical, physical, or biological elements or agents which adversely affect human health or welfare; unfavorably alter ecological balances; or degrade the utility of the environment for aesthetic, cultural, or historical purposes.

H. Garbage: Refuse and scraps resulting from preparation, cooking, dispensing, and consumption of food.

I. Hazardous Materials: Any material that is regulated as a hazardous material in accordance with 49 CFR 173, requires a Safety Data Sheet (SDS) in accordance with 29 CFR 1910.1200, or which during end use, treatment, handling, storage, transportation or disposal meets or has components which meet or have the potential to meet the definition of a Hazardous Waste in accordance with 40 CFR 261.

J. Recycle: Recovery of demolition or construction waste for subsequent processing in preparation for reuse.

1.3 PERFORMANCE REQUIREMENTS

A. General: This project shall minimize the creation of construction, deconstruction, and demolition waste to protect natural habitats and resources. Factors that contribute to waste such as over packaging, improper storage, ordering error, poor planning, breakage, mishandling, and contamination shall be minimized. A Waste Management Plan shall be developed to ensure that existing site and building materials are reused, salvaged, or recycled. Waste disposal in landfills shall be minimized.

B. Recycle Requirements: Develop waste management plan that results in end-of-Project rates for salvage/recycling of **50** percent by weight of total waste generated by the Work. The following waste categories, at a minimum, shall be diverted from a landfill:

1. Land clearing debris (chipped debris can be used on site for mulch or erosion control)
2. Clean dimensional wood, pallets
3. Plywood, OSB, and particle board
4. Concrete (can be ground and used for fill on site)
5. Asphaltic concrete (can be ground and used for fill on site)
6. Cardboard, paper, packaging, newsprint
7. Metals (from banding, stud trim, piping, rebar, roofing, other trim, steel, iron, galvanized sheet steel, stainless steel, aluminum, copper, zinc, lead, brass, and bronze)
8. Gypsum drywall—unpainted
9. Non-hazardous paint and paint cans
10. Beverage containers: Aluminum, glass, and plastic containers
11. Insulation
12. Ceiling grid and tiles
13. Ductwork
14. Wiring
15. Other mixed construction and demolition waste as appropriate

C. If any waste materials encountered during the deconstruction/demolition or construction phase are found to contain lead, asbestos, PCBs, (such as fluorescent lamp ballasts), or other harmful substances, they are to be handled and removed in accordance with local, state, and federal laws and requirements concerning hazardous waste. See Section 01 3530 Hazardous Materials.

D. The Contractor will ensure that wildlife does not have access to any garbage, debris, or other that contains organic waste products through use of covered, fully wildlife proof dumpsters or other trash receptacles. Open dumpsters are **prohibited** as they often get used for other waste streams

or trash items can blow out of them on windy days. See Section 01 5723 Temporary Storm Water Pollution Prevention.

1.4 SUBMITTALS

A. Waste Management Plan: After award of the contract and prior to the scheduled Pre-Construction Conference, the Contractor shall submit a draft Waste Management Plan to the Contracting Officer for approval. Revise and resubmit Plan as required by the Contracting Officer. Approval of the Contractor's Plan will not relieve the Contractor of responsibility for compliance with applicable environmental regulations.

B. Progress Documentation: Supplemental to the Waste Management Plan, document solid waste disposal, diversion, and cost/revenue analysis and submit a completed worksheet at the end of each calendar year during the project, at request of Contracting Officer. Use Appendix B, Sample Summary of Solid Waste Disposal and Diversion, and report totals to date for all column headings.

C. Waste Reduction Calculations: Before request for Substantial Completion, submit three copies of calculated end-of-Project rates for salvage, recycling, and disposal as a percentage of total waste generated by the Work.

D. Recycling and Processing Facility Records: Indicate receipt and acceptance of recyclable waste by recycling and processing facilities licensed to accept them. Include manifests, weight tickets, receipts, and invoices.

E. Landfill and Incinerator Disposal Records: Indicate receipt and acceptance of waste by landfills and incinerator facilities licensed to accept them. Include manifests, weight tickets, receipts, and invoices.

F. Qualification Data: For **Waste Management Coordinator and refrigerant recovery technician.**

G. Statement of Refrigerant Recovery: Signed by refrigerant recovery technician responsible for recovering refrigerant, stating that all refrigerant that was present was recovered and that recovery was performed according to EPA regulations. Include name and address of technician and date refrigerant was recovered.

H. Progress payment requirements:

1. With each Application for payment, submit updated Project Waste Management Plan worksheet for solid waste disposal and diversion.
2. With each Application for Payment, submit manifests, weight tickets, receipts, and invoices specifically identifying the Project and waste material.

I. Closeout Submittals

1. With Closeout Submittals, submit a summary worksheet of the Solid Waste Disposal and Diversion based on form in Appendix B of this Section.

1.5 QUALITY ASSURANCE

A. Waste Management Coordinator Qualifications: Experienced firm, with a record of successful waste management coordination of projects with similar requirements.

B. Refrigerant Recovery Technician Qualifications: Certified by EPA-approved certification program.

C. Regulatory Requirements: Comply with hauling and disposal regulations of authorities having jurisdiction.

D. Waste Management Meeting: Conduct separate meeting or cover in the Pre-Construction Conference and comply with requirements in Division 01 Section 01 3100 "Project Management and Coordination." Review methods and procedures related to waste management including, but not limited to, the following:

1. Review and discuss waste management plan.
2. Review requirements for documenting quantities of each type of waste and its disposition.
3. Review and finalize procedures for materials separation and verify availability of containers and bins needed to avoid delays.
4. Review procedures for periodic waste collection and transportation to recycling and disposal facilities.
5. Review waste management requirements for each trade.

PART 2 - PRODUCTS

2.1 WASTE MANAGEMENT PLAN

A. General: Develop plan consisting of waste identification and waste reduction work plan. Indicate anticipated quantities by weight or volume, but use same units of measure throughout waste management plan. Use checklist and template in Appendix A following.

B. Waste Identification: Indicate anticipated types and quantities of demolition, site-clearing and construction waste generated by the Work. Include estimated quantities and assumptions for estimates.

C. Waste Reduction Work Plan: List each type of waste and whether it will be recycled or disposed of in landfill or incinerator. Include points of waste generation, total quantity of each type of waste, quantity for each means of recovery, and handling and transportation procedures.

1. Recycled Materials: Include list of local receivers and processors and type of recycled materials each will accept. Include names, addresses, and telephone numbers.
2. Disposed Materials: Indicate how and where materials will be disposed of. Include name, address, and telephone number of each landfill and incinerator facility.
3. Handling and Transportation Procedures: Include method that will be used for separating recyclable waste including sizes of containers, container labeling, and designated location on Project site where materials separation will be located.

D. Cost/Revenue Analysis: Indicate total cost of waste disposal as if there was no waste management plan and net additional cost or net savings resulting from implementing waste management plan. Include the following:

1. Landfill tip fees/ton
2. If diverted, tip fee savings from landfill diversion
3. Costs of recycling
4. Revenue from recycling
5. Total cost or savings from diversion (Calculate by using tip fee savings and subtracting costs of recycling or adding revenue from recycling)

PART 3 - EXECUTION

3.1 PLAN IMPLEMENTATION

A. General: Implement waste management plan as approved by the Contracting Officer. Provide handling, containers, storage, signage, transportation, and other items as required to implement waste management plan during the entire duration of the Contract.

B. Waste Management Coordinator: Engage a waste management coordinator to be responsible for implementing, monitoring, and reporting status of waste management work plan. Coordinator shall be present at Project site full time for duration of Project. Contractor's Site Superintendent may fulfill role if qualified.

C. The Contractor shall establish contacts with local recycling and reuse companies to set up the lines of responsibility. Contractor shall be responsible for coordinating with these companies in terms of identifying materials, pickup schedules, and standard quality for recycled materials.

D. Training: Train workers, subcontractors, and suppliers on proper waste management procedures, as appropriate for the Work occurring at Project site.

1. Distribute waste management plan to everyone concerned within **three** business days of approval.
2. Distribute waste management plan to entities when they first begin work on-site. Review plan procedures and locations established for salvage, recycling, and disposal.

E. Site Access and Temporary Controls: Conduct waste management operations to ensure minimum interference with roads, streets, walks, walkways, and other adjacent occupied and used facilities.

F. Separation facilities:

1. The Contractor shall designate and the Contracting Officer shall approve a specific area or areas to facilitate separation of materials for potential recycling, and return.
2. Waste and recycling bins are to be placed near each other, and close to the point of waste generation but out of the traffic pattern.
3. Recycling and waste bin areas are to be kept neat and clean and clearly marked in order to avoid co-mingling of materials.
4. Bins shall be protected during non-working hours from off-site contamination.

5. The garbage dumpsters should be checked periodically to monitor recyclables being thrown away or if there are undocumented materials that could be recycled.
6. Place facilities in accordance with Section 01 5723 Temporary Storm Water Pollution Prevention.
7. See Section 01 3530 Hazardous Materials

G. Materials handling procedures: Materials to be recycled shall be protected from contamination and shall be handled, stored, and transported in a manner that meets the requirements set by the designated facilities for acceptance. Establish a defined area for the operations of each trade, especially woodcutting so that off-cuts will be kept in one area and can be sorted by dimension for future reuse.

3.2 RECYCLING DEMOLITION AND CONSTRUCTION WASTE, GENERAL

A. General: Recycle paper and beverage containers used by on-site workers.

B. Recycling Receivers and Processors: Preference should be given to local waste haulers that accept co-mingled construction and demolition debris and can document the quantities diverted. List below is provided for information only; available recycling receivers and processors include, but are not limited to, the following:

1. Bay Area Construction & Demolition Recycling Facilities

Marin Resource Recovery
565 Jacoby Street
San Rafael CA
415-485-5646

Recology (preferred vendor in San Francisco)
501 Tunnel Ave
San Francisco, CA
1-888-404-4008 (debris box);
415-330-1400 (transfer station)

Redwood Landfill and Recycling Center
8950 Redwood Highway
Novato
415-892-2851

Redwood Empire Disposal
3400 Standish Avenue
Santa Rosa
1-800-243-0291

Mill Valley Refuse Service
112 Front Street
San Rafael
415-457-9760

Bay Cities Refuse Service (required vendor in Marin Headlands)
2525 Garden Tract Road
Richmond
415-332-3646

C. Recycling Incentives: Revenues, savings, rebates, tax credits, and other incentives received for recycling waste materials shall accrue to Contractor.

D. Procedures: Separate recyclable waste from other waste materials, trash, and debris. Separate recyclable waste by type at Project site to the maximum extent practical.

1. Provide appropriately marked containers or bins for controlling recyclable waste until they are removed from Project site. Include list of acceptable and unacceptable materials at each container and bin.

   a. Inspect containers and bins for contamination and remove contaminated materials if found.

2. Stockpile processed materials on-site without intermixing with other materials. Place, grade, and shape stockpiles to drain surface water. Cover to prevent windblown dust.
3. Stockpile materials away from construction area. Do not store within drip line of remaining trees.
4. Store components off the ground and protect from the weather.
5. Remove recyclable waste off Governments property and transport to recycling receiver or processor.
6. Place containers and bins in accordance with Section 01 5723 Temporary Storm Water Pollution Prevention.
7. See Section 01 3530 Hazardous Materials

3.3 RECYCLING DEMOLITION WASTE

A. Asphaltic Concrete Paving: Break up and transport paving to asphalt-recycling facility.

1. Crush asphaltic concrete paving and screen to comply with requirements in Division 31 Section "Earth Moving".

B. Concrete: Remove reinforcement and other metals from concrete and sort with other metals..

C. Wood Materials: Sort and stack members according to size, type, and length. Separate lumber, engineered wood products, panel products, and treated wood materials.

D. Metals: Separate metals by type.

1. Structural Steel: Stack members according to size, type of member, and length.
2. Remove and dispose of bolts, nuts, washers, and other rough hardware.

E. Gypsum Board: Stack large clean pieces on wood pallets and store in a dry location. Remove edge trim and sort with other metals. Remove and dispose of fasteners.

F. Acoustical Ceiling Panels and Tile: Stack large clean pieces on wood pallets and store in a dry location.

1. Separate suspension system, trim, and other metals from panels and tile and sort with other metals.

G. Equipment: Drain tanks, piping, and fixtures. Seal openings with caps or plugs. Protect equipment from exposure to weather.

H. Plumbing Fixtures: Separate by type and size.

I. Piping: Reduce piping to straight lengths and store by type and size. Separate supports, hangers, valves, sprinklers, and other components by type and size.

J. Lighting Fixtures: Separate lamps by type and protect from breakage.

K. Electrical Devices: Separate switches, receptacles, switchgear, transformers, meters, panelboards, circuit breakers, and other devices by type.

L. Conduit: Reduce conduit to straight lengths and store by type and size.

M. Electronic Products: Ensure that all non-usable electronic products are reused, donated, sold, or recycled using environmentally sound management practices at end of life.

3.4 RECYCLING CONSTRUCTION WASTE.

A. Packaging:

1. Cardboard and Boxes: Break down packaging into flat sheets. Bundle and store in a dry location.
2. Polystyrene Packaging: Separate and bag materials.
3. Pallets: As much as possible, require deliveries using pallets to remove pallets from Project site. For pallets that remain on-site, break down pallets into component wood pieces and comply with requirements for recycling wood.
4. Crates: Break down crates into component wood pieces and comply with requirements for recycling wood.

B. Site-Clearing Wastes: Chip brush, branches, and trees on-site or as directed by Contracting Officer.

C. Wood Materials:

1. Clean Cut-Offs of Lumber: Grind or chip into small pieces.
2. Clean Sawdust: Bag sawdust that does not contain painted or treated wood.

D. Gypsum Board:

1. Clean Gypsum Board: Grind scraps of clean gypsum board using small mobile chipper or hammer mill. Screen out paper after grinding.

3.5 DISPOSAL OF WASTE

A. General: Except for items or materials to be recycled, or otherwise reused, remove waste materials from Project site and legally dispose of them in a landfill or incinerator acceptable to authorities having jurisdiction.

1. Except as otherwise specified, do not allow waste materials that are to be disposed of accumulate on-site.
2. Remove and transport debris in a manner that will prevent spillage on adjacent surfaces and areas.

B. Burning: Do not burn waste materials.

C. Disposal: Transport waste materials off Governments property and legally dispose of them.

END OF SECTION 01 7419

Appendix A. GGNRA Waste Management Plan Checklist

- ☐ **Analyze project waste**
  - ☐ Estimate types and quantities of waste the project will generate at different stages
- ☐ **Check to see what can be recycled/reused onsite (wood, soil, rock, concrete, etc.)**
- ☐ **Decide how you will recycle**
  - ☐ Can you arrange the job site to accommodate several containers?
  - ☐ Do you have the equipment to self haul?
  - ☐ How often might you need your containers picked- up?
- ☐ **Research recycling options**
  - ☐ Check out the Construction Recycling Directory
  - ☐ Call recyclers and ask them:
    - ☐ What materials do you accept?
    - ☐ Is co-mingled recycling available?
    - ☐ What are my collection options & costs?
    - ☐ If I self-haul, can I drop off, and if so, what about tipping fees?
    - ☐ Do you provide receipts to track recyclables?
    - ☐ Do you set up and provide training?
- ☐ **Decide what you will recycle at the jobsite**
- ☐ **Determine your costs**
  - ☐ Compare the cost of disposing waste with the cost of recycling
- ☐ **Write out the waste management plan**
  - ☐ Which materials will be salvaged or reused on site
  - ☐ Which materials will be recycled
  - ☐ How materials will get to the recycler
  - ☐ Names of responsible crew member/team
  - ☐ Your projected savings
- ☐ **Set up and monitor**
  - ☐ Clearly designate recycling bins
  - ☐ Post list of what is recyclable and what is not
  - ☐ Keep bins close to where waste is generated but not in traffic pattern
  - ☐ Provide hauler and crew with site plan
  - ☐ Check recycling bins daily for contamination
  - ☐ Keep dumpsters closed to discourage use by wildlife
  - ☐ Check garbage dumpsters daily for misplaced recyclables
  - ☐ Call for pick-up before boxes are full

- ☐ Require quantity and cost tickets to track results and savings

- ☐ **Make your program work**
  - ☐ Start early: Incorporate a recycling program from the start to guarantee success
  - ☐ Communicate your waste management plans to crews, subs and suppliers as they come on-site
  - ☐ Include recycling requirements in all subcontracts and purchase orders
  - ☐ Post quantities of materials reused and recycled
  - ☐ Track your savings
  - ☐ Encourage suggestions from supervisors and crew
  - ☐ Reward employees
  - ☐ Make use of available resources and directories

Resources:

http://www.sfenvironment.org/recyclewhere

http://earth911.com/recycling/

For additional information contact:

Laura Castellini, Golden Gate National Recreation Area Sustainability Coordinator

(415) 561-4789 or Laura_Castellini@nps.gov

Appendix A, cont.: SAMPLE WASTE MANAGEMENT PLAN

Company:

Project:

Designated Recycling Coordinator:

Waste Management Goals:

- ☐ This project will recycle or salvage for reuse ___% [e.g. 75%] by weight of the waste generated on-site.

Communication Plan:

_____

_____

_____

_____

_____

Expected Project Waste, Disposal, and Handling:

The following charts identify waste materials expected on this project, their disposal method, and handling procedures.

Deconstruction/Demolition Phase

Material	Quantity	Disposal Method	Handling Procedure

Construction Phase

Material	Quantity	Disposal Method	Handling Procedure

Appendix B: SAMPLE SUMMARY OF SOLID WASTE DISPOSAL AND DIVERSION

Project Name: _____ Project Number: _____

Contractor Name: _____ License Number: _____

Contractor Address: _____

Materials Disposed:

Solid Waste Material	**Date Material Disposed**	**Amount Disposed** (indicate ton or cubic yard)	**Municipal Solid Waste Facility** (name, address, & phone number)	**Comments** (if disposed, state why not diverted)

Materials Diverted:

Recycled Material	**Date Material Diverted**	**Amount Diverted** (indicate ton or cubic yard)	**Recycling Facility** (name, address, & phone number)	**Comments**

Hazardous Waste (not included in diversion rate)	**Date Material Disposed**	**Amount Disposed** (ton or cubic yard)	**Haz Waste Facility** (name, address, & phone number)	**Comments**

Signature: _____ Date: _____

SECTION 01 77 00 - CLOSEOUT PROCEDURES

PART 1 - GENERAL

1.1 SUMMARY

A. This Section includes administrative and procedural requirements for contract closeout, including, but not limited to, the following:
   1. Project Record Drawings.
   2. Closeout Submittals.
   3. Substantial Completion and Final Inspection.
   4. Final Acceptance of the Work.
   5. Warranties.
   6. Final Acceptance of the work.

1.2 PROJECT RECORD DRAWINGS

A. Maintain one complete full-size set of contract drawings and one full-size set of vendor-supplied drawings. Clearly mark changes, deletions, and additions using National Park Service drafting standards to show actual construction conditions. Show additions in red, deletions in green and special instructions in blue.

B. Contractor shall document in the as-builts the verified coordinates of constructed utilities' angle points and appurtenances based on the permanent control monuments set up for the project and tied to NAD83 2011 CA State Plane Z3 feet coordinate system.

C. Keep record drawings current. Make record drawings available to the Contracting Officer for inspection at the time of monthly progress payment requests. If project record drawings are not current, the Contracting Officer may retain an appropriate amount of the progress payment.

D. On completion of the total project, submit complete record drawings. Include all shop drawings, sketches, and additional drawings that are to be included in the final set, with clear instructions showing the location of these drawings.

1.3 CLOSEOUT SUBMITTALS

A. A list of closeout requirements has been attached at the end of Section 01 79 00 "Demonstration and Training" for your convenience. The intent is to provide an overall summary of requirements and not a comprehensive list. The terms and conditions of the contract still require you to satisfy the requirements of the individual specification sections regardless of what is shown on the list. Submit the following before requesting final inspection:

   1. Submit specific warranties, guarantees, workmanship bonds, final certifications, and similar documents.

2. Submit NPS required forms for occupancy, Fire Sprinkler/Alarm acceptance, and any other similar forms or certificates.
3. Submit Project Record Documents, operation and maintenance manuals, final completion construction digital images recorded on CD-R, DVD-R (or other digital media acceptable to CO) with index and descriptions, and similar final record information.
4. Environmental Record Documents:

    a. MSDS Data: As specified in relevant sections.
    b. Affirmative Procurement Reporting Form: As specified in Section 01 6700 Product Requirements.
    c. Chain-of-Custody Data: As specified in Section 01 6700 Product Requirements.
    d. Final Summary of Solid Waste Disposal and Diversion: As specified in Section 01 7419 Construction Waste Management.
    e. Stormwater files and reports, including information necessary to file NOT, as specified in Section 01 5327 Temporary Stormwater Pollution Prevention.
    f. IAQ Management Plan: As specified in Section 01 5719.11 Indoor Air Quality (IAQ) Management.
    g. Product Data for filtration media: As specified in Section 01 5719.11 Indoor Air Quality (IAQ) Management.
    h. Moisture Control inspections and reports: As specified in Section 01 5719.11 Indoor Air Quality (IAQ) Management.
    i. MSDS Data: As specified in Section 01 5719.11 Indoor Air Quality (IAQ) Management and Section 01 6700 Environmental Data for Products.
    j. Affirmative Procurement Reporting Form: As specified in Section 01 6700 Environmental Requirements for Products.
    k. Environmental Product Data: As specified in Section 01 6700 Requirements for Products.
    l. Commissioning Data: As specified in Section 01 9114 Total Building Commissioning.

5. Posted Operating Instructions: As specified in the individual sections. Furnish operating instructions attached to or posted adjacent to equipment. Include wiring diagrams, control diagrams, control sequence, start-up, adjustment, operation, lubrication, shut-down, safety precautions, procedures in the event of equipment failure, and other items of instruction recommended by the manufacturer.
6. Deliver tools, spare parts, extra materials, and similar items to location designated by Contracting Officer. Label with manufacturer's name and model number where applicable.

    a. Special Tools: One set of special tools required to operate, adjust, dismantle, or repair equipment. Special tools are those not normally found in possession of mechanics or maintenance personnel.
7. Keys and Keying Schedule: Submit all keys including duplicates. Wire all keys for each lock securely together. Tag and plainly mark with lock number, equipment identification, or panel or switch number, and indicate location, such as building and room name or number.
8. Make final changeover of permanent locks and deliver keys to Contracting Officer. Advise Park personnel of changeover in security provisions.
9. Submit approved pre-functional checklists and functional performance testing reports from the commissioning documentation.

10. Submit test and balance report.
11. Terminate and remove temporary facilities from Project site, along with mockups, construction tools, and similar elements.
12. Complete final cleaning requirements, including touchup painting.
13. Touch up and otherwise repair and restore marred exposed finishes to eliminate visual defects.
14. Instruct NPS personnel in operation, adjustment, and maintenance of products, equipment, and systems. Submit demonstration and training videos.

1.4 SUBSTANTIAL COMPLETION AND FINAL INSPECTION

A. When project, or designated portion of project, is substantially complete, request in writing a final inspection. Upon receipt of written request that project is substantially complete, the Contracting Officer will proceed with inspection within 10 days of receipt of request or will advise the Contractor of items that prevent the project from being designated as substantially complete.

B. If, following final inspection, the work is determined to be substantially complete, Contracting Officer will prepare a Punch List to be corrected before final acceptance and issue a Letter of Substantial Completion. Contractor shall complete the work described on the Punch List within 30 calendar days, as weather permits. If the Contractor fails to complete the work within this time frame, the Contracting Officer may either replace or correct the work with an appropriate reduction in the contract price or charge for re-inspection costs in accordance with the Inspection of Construction clause of the contract.

C. If, following final inspection, the work is not determined to be substantially complete; Contracting Officer will notify Contractor in writing. After completing work, Contractor shall request a new final inspection. All re-inspection costs may be charged against the Contractor in accordance with the Inspection of Construction clause of the contract.

1.5 CLOSEOUT SUBMITTALS

A. A list of closeout requirements has been attached at the end of the Division 1 specifications for your convenience. The intent is to provide an overall summary of requirements and not a comprehensive list.

1.6 PERMIT CLOSURE AND TRANSFER

A. When the construction work covered by the permits is complete, create a list of tasks required to close or transfer the permits to the Park. Submit to Contracting Officer for approval.

B. After substantial completion and the Punch List has been completed, the permits shall be closed and documented by the Agency(ies) with Jurisdiction for the permit.

C. If responsibility for permits is to be transferred to the Park, the Park shall be informed of the permit provisions completed and responsibilities that will transfer to park staff.

1.7 FINAL ACCEPTANCE OF THE WORK

A. Prior to requesting inspection for verification of completion of all outstanding items:

1. Complete commissioning requirements of Section 019114 “Total Commissioning”, unless approved in writing by the Contracting Officer. Exceptions to this are required seasonal and approved deferred testing.

B. After all deficiencies have been corrected, a Letter of Final Acceptance will be issued.

1.8 WARRANTIES

A. Submittal Time: Submit written warranties on request of Contracting Officer for designated portions of the Work where commencement of warranties other than date of Substantial Completion is indicated.

B. Organize warranty documents into an orderly sequence based on the table of contents of the Project Manual.

1. Bind warranties and bonds in heavy-duty, 3-ring, vinyl-covered, loose-leaf binders, thickness as necessary to accommodate contents, and sized to receive 8-1/2-by-11-inch paper.
2. Provide heavy paper dividers with plastic-covered tabs for each separate warranty. Mark tab to identify the product or installation. Provide a typed description of the product or installation, including the name of the product and the name, address, and telephone number of Installer.
3. Identify each binder on the front and spine with the typed or printed title "WARRANTIES," Project name, and name of Contractor.
4. Warranty Electronic File: Scan warranties and bonds and assemble complete warranty and bond submittal package into a single indexed electronic PDF file with links enabling navigation to each item. Provide bookmarked table of contents at the beginning of document

C. Provide additional copies of each warranty to include in operation and maintenance manuals.

PART 2 - PRODUCTS

2.1 MATERIALS

A. See Division 01 Specification Section 01 73 40 “Execution” for information on cleaning agents.

PART 3 - EXECUTION

3.1 FINAL CLEANING

A. General: Provide final cleaning. Conduct cleaning and waste-removal operations to comply with local laws and ordinances and Federal and local environmental and antipollution regulations.

B. Cleaning: Employ experienced workers or professional cleaners for final cleaning. Clean each surface or unit to condition expected in an average commercial building cleaning and maintenance program. Comply with manufacturer's written instructions.

1. Complete the following cleaning operations before requesting inspection for certification of Substantial Completion for entire Project or for a portion of Project:

a. Clean Project site, yard, and grounds, in areas disturbed by construction activities, including landscape development areas, of rubbish, waste material, litter, and other foreign substances.
b. Sweep paved areas broom clean. Remove petrochemical spills, stains, and other foreign deposits.
c. Remove tools, construction equipment, machinery, and surplus material from Project site.
d. Clean exposed exterior and interior hard-surfaced finishes to a dirt-free condition, free of stains, films, and similar foreign substances. Avoid disturbing natural weathering of exterior surfaces. Restore reflective surfaces to their original condition.
e. Remove debris and surface dust from limited access spaces, including roofs, plenums, shafts, trenches, equipment vaults, manholes, attics, and similar spaces.
f. Sweep concrete floors broom clean in unoccupied spaces.
g. Clean transparent materials, including mirrors and glass in doors and windows. Remove glazing compounds and other noticeable, vision-obscuring materials. Replace chipped or broken glass and other damaged transparent materials. Polish mirrors and glass, taking care not to scratch surfaces.
h. Remove labels that are not permanent.
i. Touch up and otherwise repair and restore marred, exposed finishes and surfaces. Replace finishes and surfaces that cannot be satisfactorily repaired or restored or that already show evidence of repair or restoration.

1) Do not paint over "UL" and similar labels, including mechanical and electrical nameplates.

j. Replace parts subject to unusual operating conditions.
k. Clean plumbing fixtures to a sanitary condition, free of stains, including stains resulting from water exposure.
l. Replace disposable air filters and clean permanent air filters. Clean exposed surfaces of diffusers, registers, and grills.
m. Clean light fixtures, lamps, globes, and reflectors to function with full efficiency. Replace burned-out bulbs, and those noticeably dimmed by hours of use, and defective and noisy starters in fluorescent and mercury vapor fixtures to comply with requirements for new fixtures.
n. Leave Project clean and ready for occupancy

C. Pest Control: Engage an experienced, licensed exterminator to make a final inspection and rid Project of rodents, insects, and other pests. Prepare a report.

D. Waste Disposal: Comply with requirements of Division 01 Section 01 7419, "Construction Waste Management and Disposal."

END OF SECTION 01 77 00

Submittal List

National Park Service (NPS) - Denver Service Center (DSC) | 1-27-21

SUBMITTAL LIST

Park Acronym/Project Management Information System (PMIS) Number: **GOGA 318662**

Project Title: **Stinson Beach Lifeguard Tower and Grill**

SUBMITTAL			REQUIREMENTS (Indicate with **X**)							
			INFORMATIONAL				ACTION			
SPECIFICATION SECTION	PARAGRAPH NUMBER	DESCRIPTION	CERTIFICATIONS OR LABORATORY TESTS	REPORTS OR CALCULATIONS OR PLAN	MANUFACTURER DATA AND INSTRUCTIONS	OTHER	SAMPLES	SHOP DRAWINGS	MANUFACTURER DATA AND INSTRUCTIONS	OTHER
02 8214		ASBESTOS ABATEMENT								
	1.4.1	Pre-construction Submittals	X		X	X				
	1.4.2	During-construction Submittals	X	X		X				
	1.4.3	Closout Submittals		X		X				
	1.5.1	Quality Assurance	X			X				
	1.6.1	Asbestos Hazard Abatement Plan				X				
	2	Products			X					
	3.9.2	Initial Exposure Assessment	X	X						
	3.9.3	Negative Exposure Assessment		X						
	3.9.7	Final Clearance Air Monitoring	X							
	3.10	Clearance Certification		X						
	3.11	Cleanup and Disposal				X				

SUBMITTAL LIST

Park Acronym/Project Management Information System (PMIS) Number:	GOGA 318662
Project Title:	Stinson Beach Lifeguard Tower and Grill

SUBMITTAL			REQUIREMENTS (Indicate with **X**)							
			INFORMATIONAL				ACTION			
SPECIFICATION SECTION	PARAGRAPH NUMBER	DESCRIPTION	CERTIFICATIONS OR LABORATORY TESTS	REPORTS OR CALCULATIONS OR PLAN	MANUFACTURER DATA AND INSTRUCTIONS	OTHER	SAMPLES	SHOP DRAWINGS	MANUFACTURER DATA AND INSTRUCTIONS	OTHER
02 8313		LEAD BASED PAINT ABATEMENT								
	1.4	Submittals	X		X	X				
	1.5.1	Quality Assurance Qualifications	X			X				
	1.5.2.2	Lead Compliance Plan	X	X		X				
	1.5.2.3	Assessment Data Report		X						
	3.5.2.1	Disposal Documentation				X				
03 10 00		CONCRETE FORMING AND ACCESSORIES								
03 10 00	1.5	Product Data			**X**					
03 10 00	1.5	Shop Drawings						**X**		
03 10 00	1.5	Certificates	**X**							
03 10 00	1.5	Quality Control Samples					**X**			
03 20 00		CONCRETE REINFORCING								

SUBMITTAL LIST

Park Acronym/Project Management Information System (PMIS) Number:	**GOGA 318662**
Project Title:	**Stinson Beach Lifeguard Tower and Grill**

SUBMITTAL			REQUIREMENTS (Indicate with **X**)							
			INFORMATIONAL				ACTION			
SPECIFICATION SECTION	PARAGRAPH NUMBER	DESCRIPTION	CERTIFICATIONS OR LABORATORY TESTS	REPORTS OR CALCULATIONS OR PLAN	MANUFACTURER DATA AND INSTRUCTIONS	OTHER	SAMPLES	SHOP DRAWINGS	MANUFACTURER DATA AND INSTRUCTIONS	OTHER
03 20 00	1.6	Shop Drawings						X		
03 20 00	1.6	Certificates	X							
03 20 00	1.6	Test Reports	X	X						
03 20 00	1.6	Quality Control Samples					X			
03 30 00		CAST-IN-PLACE CONCRETE								
03 30 00	1.5	Product Data			X					
03 30 00	1.5	Shop Drawings						X		
03 30 00	1.3	Reinforcement							X	
03 30 00	1.3	Shop Drawing						X		
03 30 00	2.5	Design Mixes	X	X	X					
03 39 00		CONCRETE CURING								
03 39 00	1.3	Shop Drawings						X		
03 39 00	1.3	Certificates	X							

SUBMITTAL LIST

Park Acronym/Project Management Information System (PMIS) Number:	**GOGA 318662**
Project Title:	**Stinson Beach Lifeguard Tower and Grill**

SUBMITTAL			REQUIREMENTS (Indicate with **X**)							
			INFORMATIONAL				ACTION			
SPECIFICATION SECTION	PARAGRAPH NUMBER	DESCRIPTION	CERTIFICATIONS OR LABORATORY TESTS	REPORTS OR CALCULATIONS OR PLAN	MANUFACTURER DATA AND INSTRUCTIONS	OTHER	SAMPLES	SHOP DRAWINGS	MANUFACTURER DATA AND INSTRUCTIONS	OTHER
03 39 00	1.3	Instructions			X				X	
05 12 00		STRUCTURAL STEEL FRAMING								
05 12 00	1.5	Shop drawing of steel						X		
05 12 00	1.5	Mill Report	X							
05 12 00	1.6	Welding Qualifications	X							
05 50 00		Miscellaneous Metals								
	1.3A	Product Data							X	
	1.3B	Shop Drawings						X		
	1.4A	Mill Certificates	X							
	1.4B	Welding Certificates	X							
05 5213		PIPE AND TUBE RAILINGS								
05 5213	1.2	Product Data							X	

SUBMITTAL LIST

Park Acronym/Project Management Information System (PMIS) Number:	**GOGA 318662**
Project Title:	**Stinson Beach Lifeguard Tower and Grill**

SUBMITTAL			REQUIREMENTS (Indicate with **X**)							
			INFORMATIONAL				ACTION			
SPECIFICATION SECTION	PARAGRAPH NUMBER	DESCRIPTION	CERTIFICATIONS OR LABORATORY TESTS	REPORTS OR CALCULATIONS OR PLAN	MANUFACTURER DATA AND INSTRUCTIONS	OTHER	SAMPLES	SHOP DRAWINGS	MANUFACTURER DATA AND INSTRUCTIONS	OTHER
05 5213	1.2	Shop Drawings						X		
05 5213	1.2	Samples					X			
05 5213	1.3	Test Reports	X							
05 71 13		Fabricated Metal Spiral Stairs								
	1.3A	Product Data							X	
	1.3B	Shop Drawings						X		
	1.3C	Samples for Initial Selection					X			
	1.3D	Samples for Verification					X			
	1.3E	Delegated Design Submittal						X		
	1.4A	Qualification Data				X				
	1.4B	Welding Certificates	X							
	1.4C	Paint Compatibility Certificates	X							
05 73 00		Decorative Metal Railings								

SUBMITTAL LIST

Park Acronym/Project Management Information System (PMIS) Number:	**GOGA 318662**
Project Title:	**Stinson Beach Lifeguard Tower and Grill**

SUBMITTAL			REQUIREMENTS (Indicate with **X**)							
			INFORMATIONAL				ACTION			
SPECIFICATION SECTION	PARAGRAPH NUMBER	DESCRIPTION	CERTIFICATIONS OR LABORATORY TESTS	REPORTS OR CALCULATIONS OR PLAN	MANUFACTURER DATA AND INSTRUCTIONS	OTHER	SAMPLES	SHOP DRAWINGS	MANUFACTURER DATA AND INSTRUCTIONS	OTHER
	1.4A	Product Data							X	
	1.4B	Shop Drawings						X		
	1.4C	Samples for Initial Selection					X			
	1.4D	Samples for Verification					X			
	1.4E	Delegated Design Submittal						X		
	1.5A	Qualification Data				X				
	1.5B	Mill Certificates	X							
	1.5C	Product Test Reports		X						
06 15 33		Wood Patio Decking								
	1.3A	Product Data							X	
	1.3B	Sustainable Design Submittals							X	
	1.3C	Samples					X			
	1.4A	Material Certificates	X							
	1.4B	Certificates of Inspection	X							

SUBMITTAL LIST

Park Acronym/Project Management Information System (PMIS) Number:	**GOGA 318662**
Project Title:	**Stinson Beach Lifeguard Tower and Grill**

SUBMITTAL			REQUIREMENTS (Indicate with **X**)							
			INFORMATIONAL				ACTION			
SPECIFICATION SECTION	PARAGRAPH NUMBER	DESCRIPTION	CERTIFICATIONS OR LABORATORY TESTS	REPORTS OR CALCULATIONS OR PLAN	MANUFACTURER DATA AND INSTRUCTIONS	OTHER	SAMPLES	SHOP DRAWINGS	MANUFACTURER DATA AND INSTRUCTIONS	OTHER
	1.4C	Evaluation Reports	X							
06 20 13		Exterior Finish Carpentry								
	1.2A	Product Data							X	
	1.2B	Sustainable Design Submittals							X	
	1.2C	Samples					X			
	1.3A	Compliance Certificates	X							
	1.3B	Sample Warranties			X					
	1.4	Shop Drawings						X		
06 20 23		Interior Finish Carpentry								
	1.3A	Product Data							X	
	1.3B	Product Data							X	
	1.3C	Sustainable Design Submittals							X	
	1.3D	Samples					X			

SUBMITTAL LIST

Park Acronym/Project Management Information System (PMIS) Number:	**GOGA 318662**
Project Title:	**Stinson Beach Lifeguard Tower and Grill**

SUBMITTAL			REQUIREMENTS (Indicate with **X**)							
			INFORMATIONAL				ACTION			
SPECIFICATION SECTION	PARAGRAPH NUMBER	DESCRIPTION	CERTIFICATIONS OR LABORATORY TESTS	REPORTS OR CALCULATIONS OR PLAN	MANUFACTURER DATA AND INSTRUCTIONS	OTHER	SAMPLES	SHOP DRAWINGS	MANUFACTURER DATA AND INSTRUCTIONS	OTHER
06 40 00		Architectural Woodwork								
	1..3A	Product Data							X	
	1.3B	Environmental Data								X
	1.3C	Samples					X			
	1.3D	Shop Drawings						X		
	1.3E	Mockups								X
07 11 13		Bituminous Dampproofing								
	1.2A	Product Data							X	
07 21 00		Thermal Insulation								
	1.2A	Product Data							X	
	1.2B	Sample					X			

SUBMITTAL LIST

Park Acronym/Project Management Information System (PMIS) Number:	**GOGA 318662**
Project Title:	**Stinson Beach Lifeguard Tower and Grill**

SUBMITTAL			REQUIREMENTS (Indicate with **X**)							
			INFORMATIONAL				ACTION			
SPECIFICATION SECTION	PARAGRAPH NUMBER	DESCRIPTION	CERTIFICATIONS OR LABORATORY TESTS	REPORTS OR CALCULATIONS OR PLAN	MANUFACTURER DATA AND INSTRUCTIONS	OTHER	SAMPLES	SHOP DRAWINGS	MANUFACTURER DATA AND INSTRUCTIONS	OTHER
07 27 26		Fluid Applied Membrane Air & Weather Barriers								
	1.2A	Product Data							X	
	1.2B	Shop Drawings						X		
07 54 19		Polyvinyl-Chloride (PVC) Roofing								
	1.4A	Product Data							X	
	1.4B	Shop Drawings						X		
	1.4C	Samples for Verification					X			
	1.4D	Wind Uplift Resistance Submittal								X
	1.5A	Qualification Data				X				
	1.5B	Manufacturer Certificates	X							
	1.5C	Evaluation Reports		X						
	1.5E	Sample Warranties				X				
	1.6A	Maintenance Data			X					
	1.6B	Certified Statement re: Warranty	X							

SUBMITTAL LIST

Park Acronym/Project Management Information System (PMIS) Number:	**GOGA 318662**
Project Title:	**Stinson Beach Lifeguard Tower and Grill**

SUBMITTAL			REQUIREMENTS (Indicate with **X**)							
			INFORMATIONAL				ACTION			
SPECIFICATION SECTION	PARAGRAPH NUMBER	DESCRIPTION	CERTIFICATIONS OR LABORATORY TESTS	REPORTS OR CALCULATIONS OR PLAN	MANUFACTURER DATA AND INSTRUCTIONS	OTHER	SAMPLES	SHOP DRAWINGS	MANUFACTURER DATA AND INSTRUCTIONS	OTHER
07 62 00		Sheet Metal Flashing and Trim								
	1.3A	Product Data							X	
	1.3B	Shop Drawings						X		
	1.3D	Samples for Verification					X			
	1.4A	Sample Warranties			X					
	1.5A	Maintenance Data			X					
07 72 00		Roof Accessories								
	1.2A	Product Data							X	
	1.2B	Shop Drawings						X		
	1.3A	Operation and Maintenance Data			X					
07 84 13		Penetration Firestopping								
	1.3A	Product Data							X	

SUBMITTAL LIST

Park Acronym/Project Management Information System (PMIS) Number:	**GOGA 318662**
Project Title:	**Stinson Beach Lifeguard Tower and Grill**

SUBMITTAL			REQUIREMENTS (Indicate with **X**)							
			INFORMATIONAL				ACTION			
SPECIFICATION SECTION	PARAGRAPH NUMBER	DESCRIPTION	CERTIFICATIONS OR LABORATORY TESTS	REPORTS OR CALCULATIONS OR PLAN	MANUFACTURER DATA AND INSTRUCTIONS	OTHER	SAMPLES	SHOP DRAWINGS	MANUFACTURER DATA AND INSTRUCTIONS	OTHER
	1.3B	Product Schedule								X
	1.4A	Installer Qualifications				X				
	1.4B	Listed System Designs				X				
	1.5A	Installer Certificates	X							
07 84 43		Joint Firestopping								
	1.3A	Product Data							X	
	1.3B	Product Schedule								X
	1.4A	Installer Qualifications				X				
	1.4B	Listed System Designs				X				
	1.5A	Installer Certificates	X							
07 92 00		Joint Sealants								
	1.2A	Product Data							X	
	1.2B	Samples for Initial Selection					X			

SUBMITTAL LIST

Park Acronym/Project Management Information System (PMIS) Number:	**GOGA 318662**
Project Title:	**Stinson Beach Lifeguard Tower and Grill**

SUBMITTAL			REQUIREMENTS (Indicate with **X**)							
			INFORMATIONAL				ACTION			
SPECIFICATION SECTION	PARAGRAPH NUMBER	DESCRIPTION	CERTIFICATIONS OR LABORATORY TESTS	REPORTS OR CALCULATIONS OR PLAN	MANUFACTURER DATA AND INSTRUCTIONS	OTHER	SAMPLES	SHOP DRAWINGS	MANUFACTURER DATA AND INSTRUCTIONS	OTHER
	1.2C	Joint Sealant Schedule								X
	1.3A	Closeout Joint Sealant Schedule				X				
	1.4A	Mockup of Sealant Installation								X
08 12 13		Hollow Metal Frames								
	1.4A/B	Product Data							X	
	1.4C	Shop Drawings						X		
	1.4D	Samples for Initial Selection					X			
	1.4E	Samples for Verification					X			
	1.4F	Product Schedule								X
	1.5A	Product Test Reports		X						
08 14 16		Flush Wood Doors								
	1.2A	Product Data							X	
	1.2B	Sustainable Design Submittals							X	

SUBMITTAL LIST

Park Acronym/Project Management Information System (PMIS) Number:	**GOGA 318662**
Project Title:	**Stinson Beach Lifeguard Tower and Grill**

SUBMITTAL			REQUIREMENTS (Indicate with **X**)							
			INFORMATIONAL				ACTION			
SPECIFICATION SECTION	PARAGRAPH NUMBER	DESCRIPTION	CERTIFICATIONS OR LABORATORY TESTS	REPORTS OR CALCULATIONS OR PLAN	MANUFACTURER DATA AND INSTRUCTIONS	OTHER	SAMPLES	SHOP DRAWINGS	MANUFACTURER DATA AND INSTRUCTIONS	OTHER
	1.2C	Shop Drawings						X		
	1.3A	Special Warranties			X					
08 22 00		Fiberglass Reinforced Plastic Doors and Frames								
	1.3A	Shop Drawings						X		
	1.3B	Product Data							X	
	1.3C	Samples					X			
08 31 13		Access Doors and Frames								
	1.2A	Product Data							X	
08 36 13		Sectional Doors								
	1.2A	Product Data							X	
	1.2B	Shop Drawings						X		
	1.2C	Samples					X			

SUBMITTAL LIST

Park Acronym/Project Management Information System (PMIS) Number:	**GOGA 318662**
Project Title:	**Stinson Beach Lifeguard Tower and Grill**

SUBMITTAL			REQUIREMENTS (Indicate with **X**)							
			INFORMATIONAL				ACTION			
SPECIFICATION SECTION	PARAGRAPH NUMBER	DESCRIPTION	CERTIFICATIONS OR LABORATORY TESTS	REPORTS OR CALCULATIONS OR PLAN	MANUFACTURER DATA AND INSTRUCTIONS	OTHER	SAMPLES	SHOP DRAWINGS	MANUFACTURER DATA AND INSTRUCTIONS	OTHER
	1.3A	Qualifications Data			X					
	1.3B	Sample Warranties			X					
	1.4A	Maintenance Data			X					
	1.4B	Manufacturer's Warranty			X					
	1.4C	Finish Warranty			X					
08 41 13		Aluminum-Framed Entrances and Storefronts								
	1.3A	Product Data							X	
	1.3B	Shop Drawings						X		
	1.3C	Samples for Initial Selection					X			
	1.4A	Energy Performance Certificates	X							
	1.4B	Sample Warranties			X					
	1.5A	Operation and Maintenance Data			X					
	1.5B	Warranty Documentation			X					

SUBMITTAL LIST

Park Acronym/Project Management Information System (PMIS) Number:	**GOGA 318662**
Project Title:	**Stinson Beach Lifeguard Tower and Grill**

SUBMITTAL			REQUIREMENTS (Indicate with **X**)							
			INFORMATIONAL				ACTION			
SPECIFICATION SECTION	PARAGRAPH NUMBER	DESCRIPTION	CERTIFICATIONS OR LABORATORY TESTS	REPORTS OR CALCULATIONS OR PLAN	MANUFACTURER DATA AND INSTRUCTIONS	OTHER	SAMPLES	SHOP DRAWINGS	MANUFACTURER DATA AND INSTRUCTIONS	OTHER
08 44 13		Glazed Aluminum Curtain Walls								
	1.3A	Product Data							X	
	1.3B	Shop Drawings						X		
	1.3C	Samples for Verification					X			
	1.3D	Delegated Design Submittal								X
	1.4A	Qualification Data				X				
	1.4B	Product Test Reports			X					
	1.4C	Sample Warranties			X					
	1.5A/B	Maintenance Data			X					
	1.6	Mockups								X
08 51 13		Aluminum Windows								
	1.4A	Product Data							X	
	1.4B	Shop Drawings						X		
	1.4C	Samples for Verification					X			

SUBMITTAL LIST

Park Acronym/Project Management Information System (PMIS) Number:	**GOGA 318662**
Project Title:	**Stinson Beach Lifeguard Tower and Grill**

SUBMITTAL			REQUIREMENTS (Indicate with **X**)							
			INFORMATIONAL				ACTION			
SPECIFICATION SECTION	PARAGRAPH NUMBER	DESCRIPTION	CERTIFICATIONS OR LABORATORY TESTS	REPORTS OR CALCULATIONS OR PLAN	MANUFACTURER DATA AND INSTRUCTIONS	OTHER	SAMPLES	SHOP DRAWINGS	MANUFACTURER DATA AND INSTRUCTIONS	OTHER
	1.4D	Product Schedule								X
	1.5A	Test and Evaluation Reports		X						
	1.5B	Sample Warranties			X					
	1.6A	Warranty Documentation			X					
08 71 00		Door Hardware								
	1.03B1	Product Data							X	
	1.03B2	Riser and Wiring Diagrams						X		
	1.03B3	Samples for Verification					X			
	1.03B4	Door Hardware Schedule								X
	1.03B5	Key Schedule								X
	1.03C1	Qualification Data for Supplier, Installer, and Arch Hardw. Cons.				X				
	1.03C2	Fire Rating Certification and Warranties			X					
	1.03D1	Operations and Maintenance Data			X					
	1.03E	Written Report to AHJ				X				

SUBMITTAL LIST

Park Acronym/Project Management Information System (PMIS) Number:	**GOGA 318662**
Project Title:	**Stinson Beach Lifeguard Tower and Grill**

SUBMITTAL			REQUIREMENTS (Indicate with **X**)							
			INFORMATIONAL				ACTION			
SPECIFICATION SECTION	PARAGRAPH NUMBER	DESCRIPTION	CERTIFICATIONS OR LABORATORY TESTS	REPORTS OR CALCULATIONS OR PLAN	MANUFACTURER DATA AND INSTRUCTIONS	OTHER	SAMPLES	SHOP DRAWINGS	MANUFACTURER DATA AND INSTRUCTIONS	OTHER
08 80 00		Glazing								
	1.5A	Product Data							X	
	1.5B	Sustainable Design Submittals							X	
	1.5C	Glass Samples					X			
	1.5D	Glazing Schedule								X
	1.6A	Qualification Data				X				
	1.6B	Preconstruction adhesion and compatibility test report		X						
	1.6C	Sample Warranties			X					
09 29 00		Gypsum Board								
	1.2A	Product Data							X	
	1.2B	Shop Drawings						X		
	1.2C	Samples					X			
	1.2D	Sustainable Design Submittals							X	

SUBMITTAL LIST

Park Acronym/Project Management Information System (PMIS) Number:	**GOGA 318662**
Project Title:	**Stinson Beach Lifeguard Tower and Grill**

SUBMITTAL			REQUIREMENTS (Indicate with **X**)							
			INFORMATIONAL				ACTION			
SPECIFICATION SECTION	PARAGRAPH NUMBER	DESCRIPTION	CERTIFICATIONS OR LABORATORY TESTS	REPORTS OR CALCULATIONS OR PLAN	MANUFACTURER DATA AND INSTRUCTIONS	OTHER	SAMPLES	SHOP DRAWINGS	MANUFACTURER DATA AND INSTRUCTIONS	OTHER
	1.3A	Mockup								X
09 51 13		Acoustical Panel Ceilings								
	1.4A	Product Data							X	
	1.4B	Samples					X			
	1.4C	Shop Drawings						X		
	1.4D	Certifications	X							
09 65 43		Linoleum Flooring								
	1.3A	Product Data							X	
	1.3B	Shop Drawings						X		
	1.3C	Samples					X			
	1.4A	Maintenance Data			X					
	1.5A	Extra Materials				X				

SUBMITTAL LIST

Park Acronym/Project Management Information System (PMIS) Number:	**GOGA 318662**
Project Title:	**Stinson Beach Lifeguard Tower and Grill**

SUBMITTAL			REQUIREMENTS (Indicate with **X**)							
			INFORMATIONAL				ACTION			
SPECIFICATION SECTION	PARAGRAPH NUMBER	DESCRIPTION	CERTIFICATIONS OR LABORATORY TESTS	REPORTS OR CALCULATIONS OR PLAN	MANUFACTURER DATA AND INSTRUCTIONS	OTHER	SAMPLES	SHOP DRAWINGS	MANUFACTURER DATA AND INSTRUCTIONS	OTHER
09 67 23		Resinous Flooring								
	1.3A	Product Data							X	
	1.3B	Sustainable Design Submittals							X	
	1.3C	Selection Samples					X			
	1.3D	Verification Samples					X			
	1.3E	Moisture Test Results								X
	1.4A	Qualification Data				X				
	1.4B	Material Test Reports	X							
	1.5	Maintenance Data			X					
09 91 13		Exterior Painting								
	1.2A	Product Data							X	
	1.2B	Sustainable Design Submittals							X	
	1.2C	Selection Samples					X			
	1.2D	Verification Samples					X			

SUBMITTAL LIST

Park Acronym/Project Management Information System (PMIS) Number:	**GOGA 318662**
Project Title:	**Stinson Beach Lifeguard Tower and Grill**

SUBMITTAL			REQUIREMENTS (Indicate with **X**)							
			INFORMATIONAL				ACTION			
SPECIFICATION SECTION	PARAGRAPH NUMBER	DESCRIPTION	CERTIFICATIONS OR LABORATORY TESTS	REPORTS OR CALCULATIONS OR PLAN	MANUFACTURER DATA AND INSTRUCTIONS	OTHER	SAMPLES	SHOP DRAWINGS	MANUFACTURER DATA AND INSTRUCTIONS	OTHER
	1.2E	Product Schedule								X
	1.3A	Maintenance Materials				X				
	1.4A	Mockups								X
09 91 23		Interior Painting								
	1.2A	Product Data							X	
	1.2B	Sustainable Design Submittals							X	
	1.2C	Selection Samples					X			
	1.2D	Verification Samples					X			
	1.2E	Product Schedule								X
	1.3A	Maintenance Materials				X				
	1.4A	Mockups								X
09 93 00		Staining and Transparent Finishing								
	1.04B	Product Data							X	

SUBMITTAL LIST

Park Acronym/Project Management Information System (PMIS) Number:	**GOGA 318662**
Project Title:	**Stinson Beach Lifeguard Tower and Grill**

SUBMITTAL			REQUIREMENTS (Indicate with **X**)							
			INFORMATIONAL				ACTION			
SPECIFICATION SECTION	PARAGRAPH NUMBER	DESCRIPTION	CERTIFICATIONS OR LABORATORY TESTS	REPORTS OR CALCULATIONS OR PLAN	MANUFACTURER DATA AND INSTRUCTIONS	OTHER	SAMPLES	SHOP DRAWINGS	MANUFACTURER DATA AND INSTRUCTIONS	OTHER
	1.04C	Samples					X			
	1.04D	Maintenance Data			X					
	1.04E	Maintenance Materials				X				
09 96 46		Intumescent Painting								
	1.3B	Product Data							X	
	1.3B	Samples					X			
	1.3C	Product Schedules								X
	1.4A	Test Reports				X				
	1.5A	Maintenance Materials				X				
10 14 23.16		Room Identification Panel Signage								
	1.4A	Product Data							X	
	1.4B	Sustainable Design Submittals							X	
	1.4C	Shop Drawings						X		

SUBMITTAL LIST

Park Acronym/Project Management Information System (PMIS) Number:	**GOGA 318662**
Project Title:	**Stinson Beach Lifeguard Tower and Grill**

SUBMITTAL			REQUIREMENTS (Indicate with **X**)							
			INFORMATIONAL				ACTION			
SPECIFICATION SECTION	PARAGRAPH NUMBER	DESCRIPTION	CERTIFICATIONS OR LABORATORY TESTS	REPORTS OR CALCULATIONS OR PLAN	MANUFACTURER DATA AND INSTRUCTIONS	OTHER	SAMPLES	SHOP DRAWINGS	MANUFACTURER DATA AND INSTRUCTIONS	OTHER
	1.4D	Samples for Initial Selection					X			
	1.4E	Samples for Verification					X			
	1.4F	Product Schedule								X
	1.6A	Warranty			X					
10 26 00		Wall and Door Protection								
	1.2A	Product Data							X	
	1.2B	Sustainable Design Submittals							X	
	1.2C	Shop Drawings						X		
	1.2D	Samples for Initial Selection					X			
	1.2E	Samples for Verification					X			
	1.3A	Material Certificates	X							
	1.3B	Sample Warranty			X					
	1.3A	Maintenance Data			X					
	1.3B	Extra Materials				X				

SUBMITTAL LIST

Park Acronym/Project Management Information System (PMIS) Number:	**GOGA 318662**
Project Title:	**Stinson Beach Lifeguard Tower and Grill**

SUBMITTAL			REQUIREMENTS (Indicate with **X**)							
			INFORMATIONAL				ACTION			
SPECIFICATION SECTION	PARAGRAPH NUMBER	DESCRIPTION	CERTIFICATIONS OR LABORATORY TESTS	REPORTS OR CALCULATIONS OR PLAN	MANUFACTURER DATA AND INSTRUCTIONS	OTHER	SAMPLES	SHOP DRAWINGS	MANUFACTURER DATA AND INSTRUCTIONS	OTHER
10 28 00		Toilet, Bath, and Laundry Accessories								
	1.3A	Product Data							X	
	1.3B	Product Schedule								X
	1.4A	Maintenance Data			X					
	1.3B	Maintenance Keys/Equipment				X				
10 44 13		Fire Protection Cabinets								
	1.2A	Product Data							X	
	1.2B	Product Schedule								X
	1.3A	Maintenance Data			X					
10 50 30		Gear Lockers								
	1.3A	Product Data							X	
	1.3B	Shop Drawings						X		

SUBMITTAL LIST

Park Acronym/Project Management Information System (PMIS) Number:	**GOGA 318662**
Project Title:	**Stinson Beach Lifeguard Tower and Grill**

SUBMITTAL			REQUIREMENTS (Indicate with **X**)							
			INFORMATIONAL				ACTION			
SPECIFICATION SECTION	PARAGRAPH NUMBER	DESCRIPTION	CERTIFICATIONS OR LABORATORY TESTS	REPORTS OR CALCULATIONS OR PLAN	MANUFACTURER DATA AND INSTRUCTIONS	OTHER	SAMPLES	SHOP DRAWINGS	MANUFACTURER DATA AND INSTRUCTIONS	OTHER
	1.3C	Samples for Initial Selection					X			
	1.3D	Owner's Manual								X
	1.3E	Sample Warranty								X
10 73 13		Awnings								
	1.3a	Product Data							X	
	1.3b	Shop Drawings						X		
	1.3c	Samples					X			
	1.4A	Sample Warranty				X				
11 00 00		Misc Equipment (Hoist)								
	1.2	Product Data							X	
	1.3A	Maintenance Data			X					
	1.3B	Sample Warranty			X					

SUBMITTAL LIST

Park Acronym/Project Management Information System (PMIS) Number:	**GOGA 318662**
Project Title:	**Stinson Beach Lifeguard Tower and Grill**

SUBMITTAL			REQUIREMENTS (Indicate with **X**)							
			INFORMATIONAL				ACTION			
SPECIFICATION SECTION	PARAGRAPH NUMBER	DESCRIPTION	CERTIFICATIONS OR LABORATORY TESTS	REPORTS OR CALCULATIONS OR PLAN	MANUFACTURER DATA AND INSTRUCTIONS	OTHER	SAMPLES	SHOP DRAWINGS	MANUFACTURER DATA AND INSTRUCTIONS	OTHER
11 40 00		Food Service Equipment								
	1.07A	Equipment List								X
	1.07B	Samples					X			
	1.07C	Brochures							X	
	1.07D	Shop, Rough-in, Connection Drawings						X		
	1.07C3	Operator's Manuals and Maintenance Instructions			X					
12 36 16		Metal Countertops								
	1.3A	Product Data							X	
	1.3B	Shop Drawings						X		
12 36 61.15		Solid Surfacing Countertops								
	1.2A	Product Data							X	
	1.2B	Sustainable Design Submittals								X
	1.2C	Shop Drawings						X		

SUBMITTAL LIST

Park Acronym/Project Management Information System (PMIS) Number:	**GOGA 318662**
Project Title:	**Stinson Beach Lifeguard Tower and Grill**

SUBMITTAL			REQUIREMENTS (Indicate with **X**)							
			INFORMATIONAL				ACTION			
SPECIFICATION SECTION	PARAGRAPH NUMBER	DESCRIPTION	CERTIFICATIONS OR LABORATORY TESTS	REPORTS OR CALCULATIONS OR PLAN	MANUFACTURER DATA AND INSTRUCTIONS	OTHER	SAMPLES	SHOP DRAWINGS	MANUFACTURER DATA AND INSTRUCTIONS	OTHER
	1.5D/E	Samples					X			
	1.3A	Qualification Data				X				
	1.4A	Maintenance Data			X					
		DIVISION 22 - PLUMBING								
220500	1.5.A	Plumbing Transition and dielectric fittings, sleeves							X	
220518	1.2A	Escutcheons							X	
220519	1.2.A	Thermometers, thermowlls, and pressure gauges							X	
220523	1.2.A	Ball Valves							X	
220548	1.2A	Product Data							X	
220548	1.2B	Delegated Design								X
220548	1.3A	Welding Certificate	X							
220548	1.3B	QC Report		X						
220548	1.3C	Qualification Data				X				
220719	1.2.A	Plumbing Piping Insulation							X	

SUBMITTAL LIST

Park Acronym/Project Management Information System (PMIS) Number:	**GOGA 318662**
Project Title:	**Stinson Beach Lifeguard Tower and Grill**

SUBMITTAL			REQUIREMENTS (Indicate with **X**)							
			INFORMATIONAL				ACTION			
SPECIFICATION SECTION	PARAGRAPH NUMBER	DESCRIPTION	CERTIFICATIONS OR LABORATORY TESTS	REPORTS OR CALCULATIONS OR PLAN	MANUFACTURER DATA AND INSTRUCTIONS	OTHER	SAMPLES	SHOP DRAWINGS	MANUFACTURER DATA AND INSTRUCTIONS	OTHER
221116	1.2.A	Domestic Water Piping		X					X	
221119	1.2.A	Domestic Water Piping Specialties		X					X	
221123	1.2.A	In-line Domestic Water Pumps				X			X	
221316	1.2.A	Sanitary Waste and Vent Piping		X					X	
221319	1.2.A	Sanitary Waste Piping Specialties							X	
223300	1.2.A	Domestic Water Heater			X	X			X	
223213	1.2.A	Commercial Water Closets							X	
224216	1.2.A	Commercial Lavatories							X	
224216	1.2A	Commerical Sinks							X	
224223	1.2A	Commerical Showers							X	
		DIVISION 23 - MECHANICAL								
230500	1.5.A	Mechanical fittings, sleeves, escutceons							X	
230529	1.2.A	Hangers and Supports				X			X	
230548	1.2.A	Vibration and Seismic Controls for HVAC	X		X	X		X	X	X

SUBMITTAL LIST

Park Acronym/Project Management Information System (PMIS) Number:	**GOGA 318662**
Project Title:	**Stinson Beach Lifeguard Tower and Grill**

SUBMITTAL			REQUIREMENTS (Indicate with **X**)							
			INFORMATIONAL				ACTION			
SPECIFICATION SECTION	PARAGRAPH NUMBER	DESCRIPTION	CERTIFICATIONS OR LABORATORY TESTS	REPORTS OR CALCULATIONS OR PLAN	MANUFACTURER DATA AND INSTRUCTIONS	OTHER	SAMPLES	SHOP DRAWINGS	MANUFACTURER DATA AND INSTRUCTIONS	OTHER
230553	1.2.A	Identification for HVAC Duct and Equipiment							X	
230593	1.3	Testing, Adjusting, and Balancing		X						
230593	3.13	Testing, Adjusting, and Balancing								X
230713	1.2.A	Duct Insulation		X					X	
233113	1.2.A	Metal Ducts	X	X		X			X	
233300	1.2.A	Air Duct Accessories				X			X	
233416	1.2.A	Centrifugal HVAC Fans				X			X	
233433	1.2.A	Commercial Air Curtains				X			X	
237423	1.2.A	Packaged Electric Outdoor Heating-Only Make-up Air Unit	X		X	X			X	
238236	1.2.A	Finned-Tube Radiation Heaters							X	
238239	1.2.A	Cabinet Unit Heaters			X	X			X	
		DIVISION 26 - ELECTRICAL								
260500	1.4	Sleeve Seals Product Data							x	

SUBMITTAL LIST

Park Acronym/Project Management Information System (PMIS) Number:	**GOGA 318662**
Project Title:	**Stinson Beach Lifeguard Tower and Grill**

SUBMITTAL			REQUIREMENTS (Indicate with **X**)							
			INFORMATIONAL				ACTION			
SPECIFICATION SECTION	PARAGRAPH NUMBER	DESCRIPTION	CERTIFICATIONS OR LABORATORY TESTS	REPORTS OR CALCULATIONS OR PLAN	MANUFACTURER DATA AND INSTRUCTIONS	OTHER	SAMPLES	SHOP DRAWINGS	MANUFACTURER DATA AND INSTRUCTIONS	OTHER
260519	1.4	Product Data							x	
260519	1.4	Qualification Data	x							
260519	1.4	Field quality-control test reports	x							
260526	1.3	Product Data								
260526	1.3	As-built location Plans		x						
260526	1.3	Qualification Data	x							
260526	1.3	Field quality-control test reports	x							
260526	1.3	O&M Data			x					
260529	1.5	Product Data							x	
260529	1.5	Shop Drawings						x		
260529	1.5	Welding Certificates	x							
260533	1.4	Product Data							x	

SUBMITTAL LIST

Park Acronym/Project Management Information System (PMIS) Number:	**GOGA 318662**
Project Title:	**Stinson Beach Lifeguard Tower and Grill**

SUBMITTAL			REQUIREMENTS (Indicate with **X**)							
			INFORMATIONAL				ACTION			
SPECIFICATION SECTION	PARAGRAPH NUMBER	DESCRIPTION	CERTIFICATIONS OR LABORATORY TESTS	REPORTS OR CALCULATIONS OR PLAN	MANUFACTURER DATA AND INSTRUCTIONS	OTHER	SAMPLES	SHOP DRAWINGS	MANUFACTURER DATA AND INSTRUCTIONS	OTHER
260533	1.4	Shop Drawings						x		
260533	1.4	Coordination Drawings						x		
260533	1.4	Qualification Data			x					
260533	1.4	Source QC Test Reports		x						
260553	1.3	Product Data							x	
260553	1.3	Identification Schedule		x						
260553	1.3	Samples					x			
260923	1.4	Product Data							x	
260923	1.4	Shop Drawings						x		
260923	1.4	Field quality-control test reports		x						
260923	1.4	O&M Data			x					
262413	1.4	Product Data							x	
262413	1.4	Shop Drawings						x		

SUBMITTAL LIST

Park Acronym/Project Management Information System (PMIS) Number:	**GOGA 318662**
Project Title:	**Stinson Beach Lifeguard Tower and Grill**

SUBMITTAL			REQUIREMENTS (Indicate with **X**)							
			INFORMATIONAL				ACTION			
SPECIFICATION SECTION	PARAGRAPH NUMBER	DESCRIPTION	CERTIFICATIONS OR LABORATORY TESTS	REPORTS OR CALCULATIONS OR PLAN	MANUFACTURER DATA AND INSTRUCTIONS	OTHER	SAMPLES	SHOP DRAWINGS	MANUFACTURER DATA AND INSTRUCTIONS	OTHER
262413	1.4	Qualification Data	x							
262413	1.4	Field quality-control test reports		x						
262413	1.4	O&M Data			x					
262416	1.5	Product Data							x	
262416	1.5	Shop Drawings						x		
262416	1.5	Qualification Data	x							
262416	1.5	Field quality-control test reports		x						
262416	1.5	Panelboard Schedules		x						
262416	1.5	O&M Data			x					
262713	1.3	Product Data							x	
262713	1.3	Shop Drawings						x		
262713	1.3	Field quality-control test reports		x						
262713	1.3	O&M Data			x					

SUBMITTAL LIST

Park Acronym/Project Management Information System (PMIS) Number:	**GOGA 318662**
Project Title:	**Stinson Beach Lifeguard Tower and Grill**

SUBMITTAL			REQUIREMENTS (Indicate with **X**)							
			INFORMATIONAL				ACTION			
SPECIFICATION SECTION	PARAGRAPH NUMBER	DESCRIPTION	CERTIFICATIONS OR LABORATORY TESTS	REPORTS OR CALCULATIONS OR PLAN	MANUFACTURER DATA AND INSTRUCTIONS	OTHER	SAMPLES	SHOP DRAWINGS	MANUFACTURER DATA AND INSTRUCTIONS	OTHER
262726	1.4	Product Data							x	
262726	1.4	Shop Drawings						x		
262726	1.4	Samples					x			
262726	1.4	Field quality-control test reports		x						
262726	1.4	O&M Data			x					
264113	1.4	Product Data							x	
264113	1.4	Shop Drawings						x		
264113	1.4	Coordination Drawings						x		
264113	1.4	Qualification Data	x							
264113	1.4	Product Certificates	x							
264113	1.4	Field quality-control test reports		x					x	
264313	1.4	Product Data								
264313	1.5	Field quality-control test reports		x						

SUBMITTAL LIST

Park Acronym/Project Management Information System (PMIS) Number:	**GOGA 318662**
Project Title:	**Stinson Beach Lifeguard Tower and Grill**

SUBMITTAL			REQUIREMENTS (Indicate with **X**)							
			INFORMATIONAL				ACTION			
SPECIFICATION SECTION	PARAGRAPH NUMBER	DESCRIPTION	CERTIFICATIONS OR LABORATORY TESTS	REPORTS OR CALCULATIONS OR PLAN	MANUFACTURER DATA AND INSTRUCTIONS	OTHER	SAMPLES	SHOP DRAWINGS	MANUFACTURER DATA AND INSTRUCTIONS	OTHER
		DIVISION 27 - COMMUNICATIONS								
270010	1.5	Coordination Drawings						x		
270010	1.6	Installation Schedule		x						
270010	1.6	Certificates	x							
270010	1.6	Wind Load Performance Certificates	x							
270010	1.7	O&M Data			x					
270010	1.7	Software Operational Documentation		x						
270526	1.3	Shop Drawings						x		
270526	1.3	Field quality-control test reports		x						
270526	1.4	Manufacturer's published instructions							x	
270526	1.5	Record Documentation		x						
270528	1.4	Product Data							x	

SUBMITTAL LIST

Park Acronym/Project Management Information System (PMIS) Number:	**GOGA 318662**
Project Title:	**Stinson Beach Lifeguard Tower and Grill**

SUBMITTAL			REQUIREMENTS (Indicate with **X**)							
			INFORMATIONAL				ACTION			
SPECIFICATION SECTION	PARAGRAPH NUMBER	DESCRIPTION	CERTIFICATIONS OR LABORATORY TESTS	REPORTS OR CALCULATIONS OR PLAN	MANUFACTURER DATA AND INSTRUCTIONS	OTHER	SAMPLES	SHOP DRAWINGS	MANUFACTURER DATA AND INSTRUCTIONS	OTHER
270528	1.4	Shop Drawings						x		
270528	1.5	Coordination Drawings						x		
270528	1.5	Source QC Test Reports		x						
270529	1.3	Product Data							x	
270529	1.3	Shop Drawings						x		
270529	1.5	Coordination Drawings						x		
270544	1.3	Product Data							x	
270553	1.3	Product Data							x	
270553	1.3	Identification Schedule		x						
271116	1.4	Product Data							x	
271116	1.4	Shop Drawings						x		

SUBMITTAL LIST

Park Acronym/Project Management Information System (PMIS) Number:	**GOGA 318662**
Project Title:	**Stinson Beach Lifeguard Tower and Grill**

SUBMITTAL			REQUIREMENTS (Indicate with **X**)							
			INFORMATIONAL				ACTION			
SPECIFICATION SECTION	PARAGRAPH NUMBER	DESCRIPTION	CERTIFICATIONS OR LABORATORY TESTS	REPORTS OR CALCULATIONS OR PLAN	MANUFACTURER DATA AND INSTRUCTIONS	OTHER	SAMPLES	SHOP DRAWINGS	MANUFACTURER DATA AND INSTRUCTIONS	OTHER
271116	1.4	Qualification Data	x							
271513	1.4	Product Data							x	
271513	1.4	Shop Drawings						x		
271513	1.4	Twisted pair cable testing plan		x						
271513	1.4	Field quality-control test reports		x						
271513	1.5	Qualification Data	x							
271513	1.5	Product Certificates	x							
271513	1.5	Source QC Test Reports		x						
271513	1.6	Maintenance Data		x						
271513	1.6	Warranty Documentation		x						
271513	1.7	Furnish extra materials								x
		DIVISION 28 - ELECTRONIC SAFETY AND SECURITY								
280010	1.5	Coordination Drawings						x		

SUBMITTAL LIST

Park Acronym/Project Management Information System (PMIS) Number:	**GOGA 318662**
Project Title:	**Stinson Beach Lifeguard Tower and Grill**

SUBMITTAL			REQUIREMENTS (Indicate with **X**)							
			INFORMATIONAL				ACTION			
SPECIFICATION SECTION	PARAGRAPH NUMBER	DESCRIPTION	CERTIFICATIONS OR LABORATORY TESTS	REPORTS OR CALCULATIONS OR PLAN	MANUFACTURER DATA AND INSTRUCTIONS	OTHER	SAMPLES	SHOP DRAWINGS	MANUFACTURER DATA AND INSTRUCTIONS	OTHER
280010	1.6	Installation Schedule		x						
280010	1.6	Certificates	x							
280010	1.7	O&M Data			x					
280010	1.7	Software Operational Documentation			x					
283100	1.4	Product Data							x	
283100	1.4	Shop Drawings						x		
283100	1.4	Design Data							x	
283100	1.5	Informational Submittals			x					
283100	1.6	O&M Data			x					
283100	1.7	Maintenance Materials								x
283111	1.6	Product Data							x	
283111	1.6	Shop Drawings						x		
283111	1.6	Delegated Design Submittal				x				

SUBMITTAL LIST

Park Acronym/Project Management Information System (PMIS) Number:	**GOGA 318662**
Project Title:	**Stinson Beach Lifeguard Tower and Grill**

SUBMITTAL			REQUIREMENTS (Indicate with **X**)							
			INFORMATIONAL				ACTION			
SPECIFICATION SECTION	PARAGRAPH NUMBER	DESCRIPTION	CERTIFICATIONS OR LABORATORY TESTS	REPORTS OR CALCULATIONS OR PLAN	MANUFACTURER DATA AND INSTRUCTIONS	OTHER	SAMPLES	SHOP DRAWINGS	MANUFACTURER DATA AND INSTRUCTIONS	OTHER
283111	1.6	Qualification Data		x						
283111	1.6	Field quality-control test reports		x						
283111	1.6	O&M Data			x					
283111	1.6	Software Operational Documentation			x					
		DIVISION 31 - EARTHWORK								
31 05 13	1.4	Product Data			X					
31 05 13	1.4	Samples					X			
31 05 13	1.4	Certificates	X							
31 05 13	1.4	Quality Control Samples					X			
31 22 13	1.4	Samples					X			
31 22 13	1.4	Certificates	X							
31 23 16.13	1.5	Protection Plan		X						

SUBMITTAL LIST

Park Acronym/Project Management Information System (PMIS) Number:	**GOGA 318662**
Project Title:	**Stinson Beach Lifeguard Tower and Grill**

SUBMITTAL			REQUIREMENTS (Indicate with **X**)							
			INFORMATIONAL				ACTION			
SPECIFICATION SECTION	PARAGRAPH NUMBER	DESCRIPTION	CERTIFICATIONS OR LABORATORY TESTS	REPORTS OR CALCULATIONS OR PLAN	MANUFACTURER DATA AND INSTRUCTIONS	OTHER	SAMPLES	SHOP DRAWINGS	MANUFACTURER DATA AND INSTRUCTIONS	OTHER
31 23 16.13	1.5	Product data		X						
31 23 16.13	1.5	Certificates	X							
31 23 16.13	1.5	Quality Control Samples					X			
31 23 19	1.8	Product Data			X					
31 23 19	1.8	Shop Drawings						X		
31 23 19	1.8	Certificates	X							
31 23 19	1.8	Quality Control Samples					X			
31 23 23	1.4	Product Data			X					
31 23 23	1.4	Samples					X			
31 23 23	1.4	Certificates	X							
31 23 23	1.4	Quality Control Samples					X			
31 25 00	1.4	Product Data			X					

SUBMITTAL LIST

Park Acronym/Project Management Information System (PMIS) Number:	**GOGA 318662**
Project Title:	**Stinson Beach Lifeguard Tower and Grill**

SUBMITTAL			REQUIREMENTS (Indicate with **X**)							
			INFORMATIONAL				ACTION			
SPECIFICATION SECTION	PARAGRAPH NUMBER	DESCRIPTION	CERTIFICATIONS OR LABORATORY TESTS	REPORTS OR CALCULATIONS OR PLAN	MANUFACTURER DATA AND INSTRUCTIONS	OTHER	SAMPLES	SHOP DRAWINGS	MANUFACTURER DATA AND INSTRUCTIONS	OTHER
31 25 00	1.4	Mix Design		X						
31 25 00	1.4	Samples					X			
31 25 00	1.4	Certificates	X							
31 25 00	1.4	Quality Control Samples					X			
		DIVISION 32 - EXTERIOR IMPROVEMENTS								
32 05 13	1.4	Samples					X			
32 05 13	1.4	Certificates	X							
32 05 16	1.4	Samples					X			
32 05 16	1.4	Certificates	X							
32 11 23	1.4	Samples					X			
32 11 23	1.4	Certificates	X							

SUBMITTAL LIST

Park Acronym/Project Management Information System (PMIS) Number:	**GOGA 318662**
Project Title:	**Stinson Beach Lifeguard Tower and Grill**

SUBMITTAL			REQUIREMENTS (Indicate with **X**)							
			INFORMATIONAL				ACTION			
SPECIFICATION SECTION	PARAGRAPH NUMBER	DESCRIPTION	CERTIFICATIONS OR LABORATORY TESTS	REPORTS OR CALCULATIONS OR PLAN	MANUFACTURER DATA AND INSTRUCTIONS	OTHER	SAMPLES	SHOP DRAWINGS	MANUFACTURER DATA AND INSTRUCTIONS	OTHER
32 12 16	1.4	Product Data			X					
32 13 13	1.4	Product Data			X					
32 13 13	1.4	Mix Design		X						
32 13 13	1.4	Quality Control Samples					X			
32 1723	1.3	Product Data							X	
32 1723	1.4	Shop Drawings						X		
31 2219	1.3	Soil Analysis Report	X							
32 3250	1.3	Watering Schedule								X
32 9113	1.3	Product Data							X	
32 9113	1.3	Samples					X			

SUBMITTAL LIST

Park Acronym/Project Management Information System (PMIS) Number:	**GOGA 318662**
Project Title:	**Stinson Beach Lifeguard Tower and Grill**

SUBMITTAL			REQUIREMENTS (Indicate with **X**)							
			INFORMATIONAL				ACTION			
SPECIFICATION SECTION	PARAGRAPH NUMBER	DESCRIPTION	CERTIFICATIONS OR LABORATORY TESTS	REPORTS OR CALCULATIONS OR PLAN	MANUFACTURER DATA AND INSTRUCTIONS	OTHER	SAMPLES	SHOP DRAWINGS	MANUFACTURER DATA AND INSTRUCTIONS	OTHER
32 9113	1.3	Quality Control Samples								X
32 9200	1.5	Qualification Data				X				
32 9200	1.5	Product Data			X					
32 9200	1.5	Product Cerification	X							
32 9200	1.5	Seeding Schedule								X
32 9200	1.5	Maintenance Instructions			X					
32 9300	1.4	Product Data							X	
32 9300	1.4	Samples					X			
32 9300	1.5	Product Certificates	X							
32 9300	1.5	Sample Warranty				X				
32 9300	1.6	Maintenance Data								X
		DIVISION 33 - UTILITIES								

SUBMITTAL LIST

Park Acronym/Project Management Information System (PMIS) Number:	**GOGA 318662**
Project Title:	**Stinson Beach Lifeguard Tower and Grill**

SUBMITTAL			REQUIREMENTS (Indicate with **X**)							
			INFORMATIONAL				ACTION			
SPECIFICATION SECTION	PARAGRAPH NUMBER	DESCRIPTION	CERTIFICATIONS OR LABORATORY TESTS	REPORTS OR CALCULATIONS OR PLAN	MANUFACTURER DATA AND INSTRUCTIONS	OTHER	SAMPLES	SHOP DRAWINGS	MANUFACTURER DATA AND INSTRUCTIONS	OTHER
33 01 10.58	1.4	Procedure		X						
33 01 10.58	1.4	Product Data			X					
33 01 10.58	1.4	Samples					X			
33 01 10.58	1.4	Test and Evaluation Reports	X	X						
33 01 10.58	1.4	Quality Control Samples					X			
33 01 30.86	1.6	Product Data			X					
33 01 30.86	1.6	Certificates	X							
33 01 30.86	1.6	Instructions			X					
33 01 30.86	1.6	Quality Control Samples					X			
33 05 05.31	1.3	Methods			X					
33 05 05.31	1.3	Reports	X	X						
33 05 05.33	1.2	Methods			X					

SUBMITTAL LIST

Park Acronym/Project Management Information System (PMIS) Number:	**GOGA 318662**
Project Title:	**Stinson Beach Lifeguard Tower and Grill**

SUBMITTAL			REQUIREMENTS (Indicate with **X**)							
			INFORMATIONAL				ACTION			
SPECIFICATION SECTION	PARAGRAPH NUMBER	DESCRIPTION	CERTIFICATIONS OR LABORATORY TESTS	REPORTS OR CALCULATIONS OR PLAN	MANUFACTURER DATA AND INSTRUCTIONS	OTHER	SAMPLES	SHOP DRAWINGS	MANUFACTURER DATA AND INSTRUCTIONS	OTHER
33 05 05.33	1.2	Reports	X	X						
33 05 09.33	1.6	Product Data			X					
33 05 09.33	1.6	Shop Drawings						X		
33 02 09.33	1.6	Samples					X			
33 05 09.33	1.6	Instrucitons			X					
33 05 09.33	1.6	Quality Control Samples					X			
33 05 53	1.4	Product Data			X					
33 05 53	1.4	Shop Drawings						X		
33 05 53	1.4	Samples					X			
33 05 53	1.4	Instrucitons			X					
33 05 53	1.4	Quality Control Samples					X			
33 05 61	1.5	Product Data			X					

SUBMITTAL LIST

Park Acronym/Project Management Information System (PMIS) Number:	**GOGA 318662**
Project Title:	**Stinson Beach Lifeguard Tower and Grill**

SUBMITTAL			REQUIREMENTS (Indicate with **X**)							
			INFORMATIONAL				ACTION			
SPECIFICATION SECTION	PARAGRAPH NUMBER	DESCRIPTION	CERTIFICATIONS OR LABORATORY TESTS	REPORTS OR CALCULATIONS OR PLAN	MANUFACTURER DATA AND INSTRUCTIONS	OTHER	SAMPLES	SHOP DRAWINGS	MANUFACTURER DATA AND INSTRUCTIONS	OTHER
33 05 61	1.5	Shop Drawings						X		
33 05 61	1.5	Certificates	X							
33 05 61	1.5	Instrucitons			X					
33 05 61	1.5	Quality Control Samples					X			
33 05 63	1.5	Product Data			X					
33 05 63	1.5	Shop Drawings						X		
33 05 63	1.5	Mix Design		X						
33 05 63	1.5	Samples					X			
33 05 63	1.5	Certificates	X							
33 05 63	1.5	Instrucitons			X					
33 05 63	1.5	Quality Control Samples					X			
33 05 97	1.2	Product Data			X					
33 05 97	1.2	Samples					X			

SUBMITTAL LIST

Park Acronym/Project Management Information System (PMIS) Number:	**GOGA 318662**
Project Title:	**Stinson Beach Lifeguard Tower and Grill**

SUBMITTAL			REQUIREMENTS (Indicate with **X**)							
			INFORMATIONAL				ACTION			
SPECIFICATION SECTION	PARAGRAPH NUMBER	DESCRIPTION	CERTIFICATIONS OR LABORATORY TESTS	REPORTS OR CALCULATIONS OR PLAN	MANUFACTURER DATA AND INSTRUCTIONS	OTHER	SAMPLES	SHOP DRAWINGS	MANUFACTURER DATA AND INSTRUCTIONS	OTHER
33 05 97	1.2	Certificates	X							
33 05 97	1.2	Quality Control Samples					X			
33 14 16	1.4	Product Data			X					
33 14 16	1.4	Certificates	X							
33 14 16	1.4	Quality Control Samples					X			
33 14 17	1.4	Product Data			X					
33 14 17	1.4	Certificates	X							
33 14 17	1.4	Instrucitons			X					
33 14 17	1.4	Quality Control Samples					X			
33 14 19	1.5	Product Data			X					
33 14 19	1.5	Certificates	X							
33 14 19	1.5	Instrucitons			X					

SUBMITTAL LIST

Park Acronym/Project Management Information System (PMIS) Number:	**GOGA 318662**
Project Title:	**Stinson Beach Lifeguard Tower and Grill**

SUBMITTAL			REQUIREMENTS (Indicate with **X**)							
			INFORMATIONAL				ACTION			
SPECIFICATION SECTION	PARAGRAPH NUMBER	DESCRIPTION	CERTIFICATIONS OR LABORATORY TESTS	REPORTS OR CALCULATIONS OR PLAN	MANUFACTURER DATA AND INSTRUCTIONS	OTHER	SAMPLES	SHOP DRAWINGS	MANUFACTURER DATA AND INSTRUCTIONS	OTHER
33 14 19	1.5	Quality Control Samples					X			
33 31 00	1.6	Product Data			X					
33 31 00	1.6	Certificates	X							
33 31 00	1.6	Quality Control Samples					X			

SUBMITTAL LIST

Park Acronym/Project Management Information System (PMIS) Number:	**GOGA 318662**
Project Title:	**Stinson Beach Lifeguard Tower and Grill**

SUBMITTAL			REQUIREMENTS (Indicate with **X**)							
			INFORMATIONAL				ACTION			
SPECIFICATION SECTION	PARAGRAPH NUMBER	DESCRIPTION	CERTIFICATIONS OR LABORATORY TESTS	REPORTS OR CALCULATIONS OR PLAN	MANUFACTURER DATA AND INSTRUCTIONS	OTHER	SAMPLES	SHOP DRAWINGS	MANUFACTURER DATA AND INSTRUCTIONS	OTHER

SUBMITTAL LIST

Park Acronym/Project Management Information System (PMIS) Number:	**GOGA 318662**
Project Title:	**Stinson Beach Lifeguard Tower and Grill**

SUBMITTAL			REQUIREMENTS (Indicate with **X**)							
			INFORMATIONAL				ACTION			
SPECIFICATION SECTION	PARAGRAPH NUMBER	DESCRIPTION	CERTIFICATIONS OR LABORATORY TESTS	REPORTS OR CALCULATIONS OR PLAN	MANUFACTURER DATA AND INSTRUCTIONS	OTHER	SAMPLES	SHOP DRAWINGS	MANUFACTURER DATA AND INSTRUCTIONS	OTHER

SUBMITTAL LIST

Park Acronym/Project Management Information System (PMIS) Number:	**GOGA 318662**
Project Title:	**Stinson Beach Lifeguard Tower and Grill**

SUBMITTAL			REQUIREMENTS (Indicate with **X**)							
			INFORMATIONAL				ACTION			
SPECIFICATION SECTION	PARAGRAPH NUMBER	DESCRIPTION	CERTIFICATIONS OR LABORATORY TESTS	REPORTS OR CALCULATIONS OR PLAN	MANUFACTURER DATA AND INSTRUCTIONS	OTHER	SAMPLES	SHOP DRAWINGS	MANUFACTURER DATA AND INSTRUCTIONS	OTHER

SUBMITTAL LIST

Park Acronym/Project Management Information System (PMIS) Number:	**GOGA 318662**
Project Title:	**Stinson Beach Lifeguard Tower and Grill**

SUBMITTAL			REQUIREMENTS (Indicate with **X**)							
			INFORMATIONAL				ACTION			
SPECIFICATION SECTION	PARAGRAPH NUMBER	DESCRIPTION	CERTIFICATIONS OR LABORATORY TESTS	REPORTS OR CALCULATIONS OR PLAN	MANUFACTURER DATA AND INSTRUCTIONS	OTHER	SAMPLES	SHOP DRAWINGS	MANUFACTURER DATA AND INSTRUCTIONS	OTHER

SECTION 01 3530 HAZARDOUS MATERIALS

PART 1 - – GENERAL

1.1 SECTION INCLUDES

A. Hazardous materials identification and abatement.

1.2 DEFINITION OF HAZARDOUS MATERIALS

1. Refer to hazardous and toxic materials/substances included in Section 02 8214 "Asbestos Abatement", Section 02 8313 "Lead Paint Abatement" and construction drawings, regarding removal of hazardous materials.

1.3 GENERAL CONDITIONS

1. Existing lifeguard tower and grill contain(s) hazardous materials.
2. The Park has conducted survey(s) for Asbestos containing materials and Lead-based Paints**.**

1.4 REMOVAL OF IDENTIFIED HAZARDOUS MATERIALS

A. Identified Hazardous Materials:

1. The Contractor shall perform hazardous materials abatement in compliance with requirements described in the document identified above. Costs and time associated with abatement of hazardous materials identified in this report shall be included in the Contract Sum and Contract Time.
2. See Section 02 8214 "Asbestos Abatement", Section 02 8313 "Lead Paint Abatement" and construction drawings, regarding removal of hazardous materials.

1.5 STOP WORK CONDITION

A. Differing Site Condition:

1. If the Contractor encounters differing site conditions with regard to hazardous materials, the Contractor shall immediately stop work in the area affected and report the condition to Contracting Officer.
2. Work in the affected area shall not be resumed except by written agreement between the Contracting Officer and Contractor.

B. Notification and Disclosure:

1. In the event that hazardous materials are discovered on site during performance of the Work, the Contractor shall notify the Contracting Officer and request directions for abatement of hazardous materials.

2. The Contracting Officer will direct the Contractor to dispose of the identified hazardous material in accordance with the Section 02 8214 “Asbestos Abatement”, Section 02 8313 “Lead Paint Abatement” and construction drawings.

PART 2 - – PRODUCTS NOT USED

PART 3 - – EXECUTION NOT USED

END OF SECTION 01 3530

SECTION 01 40 00 QUALITY REQUIREMENTS

PART 1 - GENERAL

1.1 SUMMARY

A. This Section includes administrative and procedural requirements for quality assurance and quality control. This project is located on a beachfront, subject to accelerated deterioration of external and internal assemblies and components. The contractor is expected to exercise due diligence in informing all the various trades suppling material and performing labor on the project that a greater standard of care will be enforced in deference to the exposure of the site to the damaging influences and effects of the harsh marine coastal climate.

B. Throughout the project Plans and Specifications there are many references to Stainless Steel. This reference is intended to reflect the projects priority to install type 316 Stainless assemblies and products wherever possible. In the event this material is not available for a component the contractor shall be responsible for providing documentation to support this instance and submit substitute products for NPS review and approval with the highest level of corrosion resistance available.

In the event that the NPS determines a superior product was available at the time of the contractor's submittal or after NPS approval and contractor’s installation of a substitution, the NPS reserves the right to require the contractor to remove and install the superior product at no expense to the Government.

C. Field Welding of steel assemblies is not allowed without NPS approval of a written request by the contractor 30 days prior to any proposed exception, stating the specific circumstances supporting the request and the proposed methods for treating the location to prevent corrosion.

D. Testing and inspecting services are required to verify compliance with requirements specified or indicated. These services do not relieve Contractor of responsibility for compliance with the Contract Document requirements. The quality of all work shall be the responsibility of the Contractor.

1. Specified tests, inspections, and related actions do not limit Contractor's other quality assurance and control procedures that facilitate compliance with the Contract Document requirements.

E. See Divisions 02 through 49 Sections for specific test and inspection requirements.

1.2 DEFINITIONS

A. Quality Assurance Services: Activities, actions, and procedures performed before and during execution of the work to guard against defects and deficiencies and substantiate that proposed construction will comply with requirements.

B. Quality Control Services: Tests, inspections, procedures, and related actions during and after execution of the work to evaluate that actual products incorporated into the work and completed construction comply with requirements.

C. Mockups: Full-size physical assemblies that are constructed on-site. Mockups are constructed to verify selections made under Sample submittals; to demonstrate aesthetic effects and, where indicated, qualities of materials and execution; to review coordination, testing, or operation; to show interface between dissimilar materials; and to demonstrate compliance with specified installation tolerances. Mockups are not Samples. Unless otherwise indicated, approved mockups establish the standard by which the Work will be judged.

D. Preconstruction Testing: Tests and inspections that are performed specifically for the project before products and materials are incorporated into the work to verify performance or compliance with specified criteria.

E. Product Testing: Tests and inspections that are performed by a Nationally Recognized Testing Laboratory (NRTL), a National Voluntary Laboratory Accreditation Program (NVLAP), or a testing agency qualified to conduct product testing, to establish product performance and compliance with industry standards.

F. Source Quality Control Testing: Tests and inspections that are performed at the source, i.e., plant, mill, factory, or shop.

G. Field Quality Control Testing: Tests and inspections that are performed on-site for installation of the work and for completed work.

H. Testing Agency or Laboratory: An entity engaged to perform specific tests, inspections, or both. Testing laboratory shall mean the same as testing agency.

I. Installer/Applicator/Erector: Contractor or another entity engaged by Contractor as an employee, Subcontractor, or Sub-subcontractor, to perform a particular construction operation, including installation, erection, application, and similar operations.

1. Using a term such as “carpentry” does not imply that certain construction activities must be performed by accredited or unionized individuals of a corresponding generic name, such as “carpenter.” It also does not imply that requirements specified apply exclusively to trades people of the corresponding generic name.

1.3 CONFLICTING REQUIREMENTS

A. Reference Standards: If compliance with two or more standards is specified and the standards establish different or conflicting requirements for minimum quality levels, comply with the most stringent requirement. Refer uncertainties and requirements that are different, but apparently equal, to Contracting Officer for a decision before proceeding.

B. Minimum Quality Levels: The quality level shown or specified shall be the minimum provided or performed. The actual installation may comply exactly with the minimum quality specified, or it may exceed the minimum within reasonable limits. To comply with these requirements, indicated numeric values are minimum or maximum, as appropriate, for the context of requirements. Refer uncertainties to Contracting Officer for a decision before proceeding.

1.4 SUBMITTALS

A. Quality Control Plan:

1. After contract award and before the Pre-Construction conference, submit for approval a written Contractor Quality Control (CQC) plan.

2. If the plan requires any revisions or corrections, the Contractor shall resubmit the plan within 10 days.
3. The Government reserves the right to require changes in the plan during the contract period as necessary to obtain the quality specified.
4. No change in the approved plan may be made without written concurrence by the Contracting Officer.

B. Qualification Data: For testing agencies specified in "Quality Assurance" Article to demonstrate their capabilities and experience. Include proof of qualifications in the form of a recent report on the inspection of the testing agency by a recognized authority.

C. Contractor's Quality Control Daily Reports: Submit showing all inspections and tests on the first workday following the date covered by the report. Quality Control Supervisor shall utilize the forms attached at the end of this Section.

D. Test Reports

1. Test reports shall be completed by the person performing the test.
2. Submit Daily Test Information Sheets with Quality Control Daily Reports.
3. Submit failing test results and proposed remedial actions within four hours of noted deficiency.
4. Submit three copies of complete test results no later than one calendar day after the test was performed.

E. Accessibility Inspection Report:

1. Fill out the applicable sections of the Accessibility Inspection Report and attach to the Quality Control Daily Report.
2. Utilize the attached Accessibility Inspection form to document compliance with the Architectural Barriers Act Accessibility Standards (ABAAS).
3. Inspect at various stages of construction as needed to insure the finished product meets the standards.
4. Submit report not later than one calendar day after the inspection was performed.

F. Off-Site Inspection Reports: Submit prior to shipment.

G. If the CQC plan and Quality Control Daily Reports are not submitted as specified, the Contracting Officer may retain all payments until such time a plan is accepted and implemented, or may retain payments for work completed on days there are no Quality Control Daily Reports.

H. Permits, Licenses, and Certificates: For NPS records, submit copies of permits, licenses, certifications, inspection reports, releases, jurisdictional settlements, notices, receipts for fee payments, judgments, correspondence, records, and similar documents, established for compliance with standards and regulations bearing on performance of the work.

1.5 QUALITY ASSURANCE

A. General: Qualifications paragraphs in this Article establish the minimum qualification levels required; individual Specification Sections specify additional requirements.

B. Contractors Quality Control Staff:

1. The Contractor's Quality Control Supervisor may also perform other duties if the size of the project permits.
2. The Contractor's job supervisory staff may be used to assist the Quality Control Supervisor supplemented, as necessary, by additional certified testing technicians.

C. Installer Qualifications: A firm or individual experienced in installing, erecting, or assembling work similar in material, design, and extent to that indicated for this Project, whose work has resulted in construction with a record of successful in-service performance.

D. Manufacturer Qualifications: A firm experienced in manufacturing products or systems similar to those indicated for this Project and with a record of successful in-service performance, as well as sufficient production capacity to produce required units.

E. Fabricator Qualifications: A firm experienced in producing products similar to those indicated for this Project and with a record of successful in-service performance, as well as sufficient production capacity to produce required units.

F. Professional Engineer Qualifications: A professional engineer who is legally qualified to practice in jurisdiction where Project is located and who is experienced in providing engineering services of the kind indicated (including Structural Tests and Special Inspections (STSI). Engineering services are defined as those performed for installations of the system, assembly, or products that are similar to those indicated for this Project in material, design, and extent.

G. Specialists: Certain sections of the Specifications require that specific construction activities shall be performed by entities who are recognized experts in those operations. Specialists shall satisfy qualification requirements indicated and shall be engaged for the activities indicated.

1. Requirement for specialists shall not supersede building codes and regulations governing the work.

H. Testing Agency Qualifications: An NRTL, an NVLAP, or an independent agency with the experience and capability to conduct testing and inspecting indicated, as documented according to ASTM E 548; and with additional qualifications specified in individual Sections; and where required by Contract, is acceptable to the NPS Project Manager.

1. NRTL: A nationally recognized testing laboratory according to 29 CFR 1910.7.
2. NVLAP: A testing agency accredited according to NIST's National Voluntary Laboratory Accreditation Program.
3. All measuring devices, laboratory equipment, and instruments shall be calibrated at established intervals against certified standards in accordance with NPS requirements. Upon request, measuring and testing devices shall be made available for use by the Government for verification tests.

I. Factory-Authorized Service Representative Qualifications: An authorized representative of manufacturer who is trained and approved by manufacturer to inspect installation of manufacturer's products that are similar in material, design, and extent to those indicated for this Project.

J. Mockups: Before installing portions of the work requiring mockups, build mockups for each form of construction and finish required to comply with the following requirements, using materials indicated for the completed work:

1. Build mockups in location and of size indicated or, if not indicated, as directed by NPS Project Manager.

2. Notify NPS Project Manager seven days in advance of dates and times when mockups will be constructed.
3. Demonstrate the proposed range of aesthetic effects and workmanship.
4. Obtain NPS Project Manager's approval of mockups before starting work, fabrication, or construction.
5. Maintain mockups during construction in an undisturbed condition as a standard for judging the completed work.
6. Demolish and remove mockups when directed, unless otherwise indicated.

1.6 QUALITY CONTROL

A. The Contractor is responsible for all testing and inspections required by this scope of work, including Structural Tests and Special Inspections (STSI), as identified in the Statement of Structural Tests and Special Inspections (STSI) (see attached). Inspect and test work as needed to ensure that the quality of materials, workmanship, construction, finish, and functional performance are in compliance with applicable specifications, drawings, and those required by the Building Code.

1. Engage a qualified testing agency to perform these quality-control services.
2. Submit the appropriate report, for each quality-control service.
3. Testing and inspecting requested by Contractor and not required by the Contract Documents are Contractor's responsibility.
4. The NPS Project Manager may designate test locations.

B. Manufacturer's Field Services: Where indicated, engage a factory-authorized service representative to inspect field-assembled components and equipment installation, including service connections. Report results in writing.

C. Re-testing/Re-inspecting: Regardless of whether original tests or inspections were Contractor's responsibility, provide quality-control services, including retesting and re-inspecting, for construction that replaced work that failed to comply with the Contract Documents.

D. Testing Agency Responsibilities: Cooperate with NPS and Contractor in performance of duties. Provide qualified personnel to perform required tests and inspections.

1. Notify NPS Project Manager and Contractor promptly of irregularities or deficiencies observed in the work during performance of its services.
2. Determine the location from which test samples will be taken and in which in-situ tests are conducted.
3. Conduct and interpret tests and inspections and state in each report whether tested and inspected work complies with or deviates from requirements.
4. Submit 3 copies of the certified written report of each test, inspection, and similar quality-control service through Contractor.
5. Do not release, revoke, alter, or increase the Contract Document requirements or approve or accept any portion of the work.

E. Associated Services: Cooperate with agencies performing required tests, inspections, and similar quality-control services, and provide reasonable auxiliary services as requested. Notify agency sufficiently in advance of operations to permit assignment of personnel. Provide the following:

1. Access to the work.

2. Incidental labor and facilities necessary to facilitate tests and inspections.
3. Adequate quantities of representative samples of materials that require testing and inspecting. Assist agency in obtaining samples.
4. Facilities for storage and field curing of test samples.
5. Delivery of samples to testing agencies.
6. Preliminary design mix proposed for use for material mixes that require control by testing agency.
7. Security and protection for samples and for testing and inspecting equipment at Project site.

F. Coordination: Coordinate sequence of activities to accommodate required quality assurance and control services with a minimum of delay and to avoid necessity of removing and replacing construction to accommodate testing and inspecting.

1. Schedule times for tests, inspections, obtaining samples, and similar activities.

PART 2 - PRODUCTS

2.1 QUALITY CONTROL PLAN

A. The Quality Control Plan shall include:

1. A list of personnel responsible for quality control and assigned duties. Include each person's qualifications.
2. A copy of a letter of direction to the Contractor's Quality Control Supervisor outlining assigned duties.
3. Names, qualifications, and descriptions of laboratories to perform sampling and testing, and samples of proposed report forms.
4. Methods of performing, documenting, and enforcing quality control of all work.
5. Methods of monitoring and controlling environmental pollution and contamination as required by regulations and laws.

PART 3 - EXECUTION

3.1 OFF-SITE CONTROL

A. Items that are fabricated or assembled off-site shall be inspected for quality control at the place of fabrication.

3.2 ON-SITE CONTROL

A. Notification:

1. Notify the NPS Project Manager at least 7 calendar days in advance of the preparatory phase meeting.
2. Notify the NPS Project Manager at least 2 working days (M-F) in advance of the initial and follow-up phases.

B. Preparatory Phase: Perform before beginning each feature of work.

1. Review control submittal requirements with personnel directly responsible for quality assurance and quantity control of the work. As a minimum, the NPS Project Manager, Contractor's Quality Control Supervisor and the foreman responsible for the feature of work shall be in attendance.
2. Review all applicable specifications sections and drawings related to the feature of work.
3. Ensure that copies of all referenced standards related to sampling, testing, and execution for the feature of work are available on site.
4. Ensure that provisions have been made for field control testing.
5. Examine the work area to ensure that all preliminary work has been completed.
6. Verify all field dimensions and advise the NPS Project Manager of discrepancies with contract documents.
7. Ensure that necessary equipment and materials are at the project site and that they comply with approved shop drawings and submittals.
8. Document all preparatory phase activities and discussions on the Contractor's Quality Control Daily Report.

C. Initial Phase:

1. As soon as work begins, inspect and test a representative portion of a particular feature of work for quality of workmanship.
2. Review control testing procedures to ensure compliance with contract requirements.
3. Document all initial phase activities and discussions on the Contractor's Quality Control Daily Report. Exact location of initial phase shall be indicated for future reference and comparison with follow-up phases.

D. Follow-Up Phase: Inspect and test as work progresses to ensure compliance with contract requirements until completion of work.

E. Additional Preparatory and Initial Phases: Additional preparatory and initial phases may be required by the NPS Contracting Officer on the same feature of work for the following reasons:

1. Quality of on-going work is unacceptable to the NPS Project Manager
2. Changes occur in the applicable quality control staff, on-site production supervision, or work crew.
3. Work on a particular feature of work is resumed after a substantial period of inactivity.

3.3 DOCUMENTATION

A. Maintain Quality Control Daily Reports, Daily Test Report Information Sheets, and Accessibility Inspection Reports (attached) of quality control activities and tests.

B. Quality Control Daily Reports may not be substituted for other written reports required under clauses of the contract, such as Disputes, Differing Site Conditions, or Changes.

3.4 ENFORCEMENT

A. The Contractor shall stop work on any item or feature pending satisfactory correction of any deficiency noted by the quality control staff or the NPS Project Manager.

3.5 REPAIR AND PROTECTION

A. General: On completion of testing, inspecting, sample taking, and similar services, repair damaged construction and restore substrates and finishes.

1. Provide materials and comply with installation requirements specified in other Specification Sections. Restore patched areas and extend restoration into adjoining areas with durable seams that are as invisible as possible.

B. Protect construction exposed by or for quality-control service activities.

C. Repair and protection are Contractor's responsibility, regardless of the assignment of responsibility for quality-control services.

END OF SECTION 01 4000

CONTRACTOR'S QUALITY CONTROL DAILY REPORT

REPORT NO. _____ SHEET 1 OF _____

PROJECT				CONTRACT NO.	DATE
PARK				CONTRACTOR'S REPRESENTATIVE ON THE JOB	
WEATHER (Rain, Snow, Cloudy, Windy, etc.)	RAINFALL Inches	TEMPERATURE MAX.	MIN.	GROUND CONDITIONS (Dry, Damp, Wet, Frozen, etc.)	

1. PRIME CONTRACTOR

NO. EMPLOYEES BY JOB CATEGORIES	Hours	HEAVY EQUIPMENT ON JOB	NO. UNITS	HRS. WORKING		
				YES	NO	Comments

WORK PERFORMED BY PRIME CONTRACTOR:

MATERIALS DELIVERED	OFFICIAL VISITORS TO SITE

2A. SUBCONTRACTOR, _____: (If more than one subcontractor use copies of following page.)

NO. EMPLOYEES BY JOB CATEGORIES	Hours	HEAVY EQUIPMENT ON JOB	NO. UNITS	HRS. WORKING		
				YES	NO	Comments

WORK PERFORMED BY SUBCONTRACTOR:

3. SPECIFIC INSPECTIONS: (Inspections performed, results, and corrective actions)

4. TESTING: ☐1 Check if any testing was performed today. (Complete and attach Test Report Information Sheets.)
Type and Location of Testing: _____

5. VERBAL INSTRUCTION RECEIVED FROM GOVERNMENT ON CONSTRUCTION DEFICIENCIES OR RE-TESTING REQUIRED:

6. REMARKS:

7. CERTIFICATION:

I certify that the above report is complete and correct and that I, or my authorized representative, have inspected all work performed this day by the prime contractor and each subcontractor and determined that all materials, equipment, and workmanship are in strict compliance with the plans and specifications except as may be noted above.

_____
Contractor's Quality Control Representative

SUBCONTRACTOR WORK CONTINUED:	CONTRACT NO.	REPORT NO. _____ SHEET ____ OF ____

2 SUBCONTRACTOR,

NO. EMPLOYEES BY JOB CATEGORIES	Hours	HEAVY EQUIPMENT ON JOB	NO. UNITS	HRS. WORKING		
				YES	NO	Comments

WORK PERFORMED BY SUBCONTRACTOR:

2 SUBCONTRACTOR,

NO. EMPLOYEES BY JOB CATEGORIES	Hours	HEAVY EQUIPMENT ON JOB	NO. UNITS	HRS. WORKING		
				YES	NO	Comments

WORK PERFORMED BY SUBCONTRACTOR:

2 SUBCONTRACTOR,

NO. EMPLOYEES BY JOB CATEGORIES	Hours	HEAVY EQUIPMENT ON JOB	NO. UNITS	HRS. WORKING		
				YES	NO	Comments

WORK PERFORMED BY SUBCONTRACTOR:

2 SUBCONTRACTOR,

NO. EMPLOYEES BY JOB CATEGORIES	Hours	HEAVY EQUIPMENT ON JOB	NO. UNITS	HRS. WORKING		
				YES	NO	COMMENTS

WORK PERFORMED BY SUBCONTRACTOR:

DAILY TEST REPORT INFORMATION SHEET

CONTRACT NO._____ REPORT NO. _____

SHEET _____ OF _____

1. Individual Making Inspection or Test:	
2. Testing Laboratory; Name:	Phone #:
Address:	
3. Description of Work and Test Method:	
4. Location of Samples and Tests or Inspections:	
5. Specification Section:	
6. Inspection or Test Data:	
7. Test Results and Interpretations of Test Results:	
8. Comments or Professional Opinion About Compliance of Inspected Work or Tested Work with contract Document Requirements:	
9. Recommendations:	
10. Corrective Actions Taken:	

CERTIFICATION:
I certify that the above testing report is complete and correct and that all testing performed this day for this contract is in strict compliance with the plans and specifications except as noted above.

_____
Signature of Inspector

CQC ACCESSIBILITY INSPECTION REPORT

Updated 10/29/11

CONTRACT NO._____ REPORT NO. _____

Note: This report covers only the most common accessibility requirements. This form can be expanded as needed for elements not shown. Inspect for compliance with all requirements of the ABAAS. Use applicable sections for each inspection.

CQC Inspector:	Date:

1. Parking and Passenger Loading Zones: Attach a copy of the grading plan with each accessible parking space running and cross slope readings noted. All slopes shall be measured with a 24" electronic level.

Location/Notes:

	Yes	No	N/A	
a)	☐	☐	☐	Accessible spaces and access aisles running slope and cross slope is 1:48 (2%) or less. Measure at 3' intervals.
b)	☐	☐	☐	Car spaces are at least 96 inches wide and van spaces 132 inches wide measured to striping centerline or face of curb.
c)	☐	☐	☐	Access aisles are 60 inches wide min. measured to striping centerline and adjoin an accessible route.
d)	☐	☐	☐	Curb ramp running slope is 1:12 (8.33%) or less, and cross slope is 1:48 (2%) or less. Measure at 3' intervals.
e)	☐	☐	☐	Curb ramp has a 36 inch minimum landing length at top, running slope and cross slope is 1:48 (2%) or less
f)	☐	☐	☐	Curb ramp flared side slopes are 1:10 (10%) or less.
g)	☐	☐	☐	Passenger loading zone (drop-off area) running slope and cross slope is 1:48 (2%) or less. Area has flush curb.

Inspection Results:

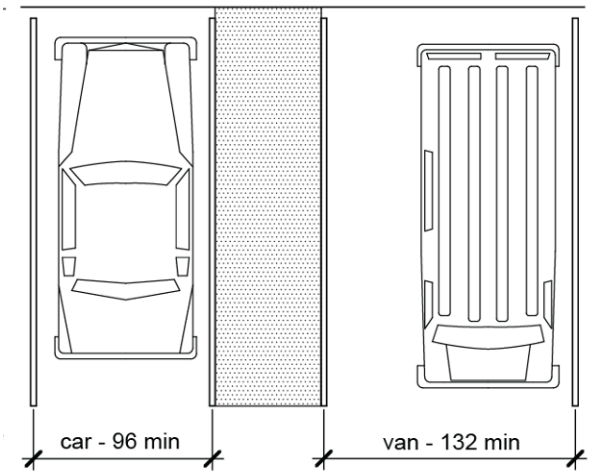

1.b) Parking Space Widths

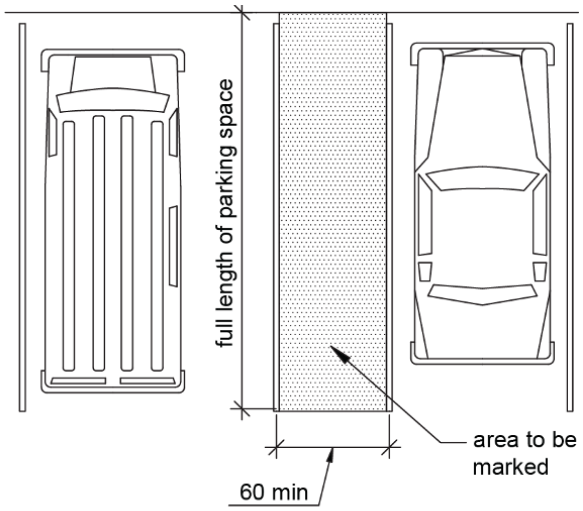

1.c) Access Aisle

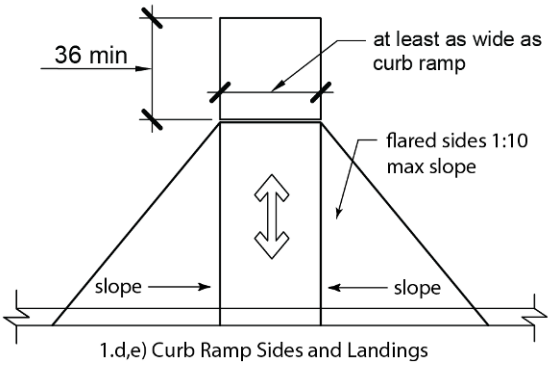

1.d,e) Curb Ramp Sides and Landings

2. Walking surfaces and Accessible Route: The accessible route is defined as the pedestrian route from the accessible parking and passenger loading zones to all accessible facilities and features. Attach accessible route plan and/or grading plan with accessible route highlighted and running and cross slope readings noted. All slopes shall be measured with a 24" electronic level.

	Yes	No	N/A	
a)	☐	☐	☐	Floor and ground surfaces are stable, firm, and slip resistant as defined by ADAABAAG Advisory 302.1.
b)	☐	☐	☐	Running slope of all walking surfaces on the accessible route is 1:20 (5%) or less. Measure at 3-foot intervals.
c)	☐	☐	☐	Cross slope of walking surfaces is 1:48 (2%) or less. Measure at 3-foot intervals.
d)	☐	☐	☐	Clear widths of walking surfaces are 36 inches minimum.
e)	☐	☐	☐	Elongated openings in floor or ground surfaces are 1/2 inch wide or less.
f)	☐	☐	☐	Elongated openings are perpendicular to direction of travel.
g)	☐	☐	☐	Accessible route surface changes are 1/2 inch or less with 1/4 inch maximum vertical change.
h)	☐	☐	☐	Floor drains and grates on accessible route meet all above requirements.

Inspection Results:

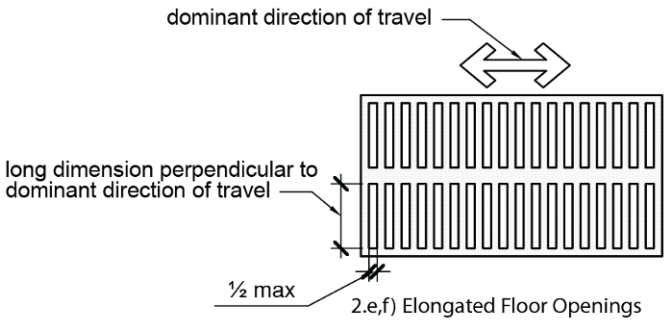

2.e,f) Elongated Floor Openings

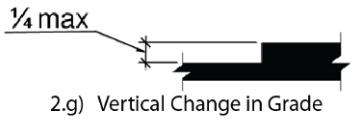

2.g) Vertical Change in Grade

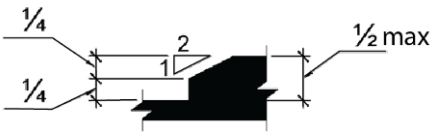

Beveled Change in Grade

3. Ramps: Ramps are defined as walking surfaces on the accessible route that are steeper than 1:20 (5%) but less than 1:12 (8.33%). Attach grading plan with running and cross slope readings noted. All slopes shall be measured with a 24" electronic level.

	Yes	No	N/A	
a)	☐	☐	☐	Running slope is 1:12 (8.33%) or less. Measured at 3-foot intervals.
b)	☐	☐	☐	Cross slope is 1:48 (2%) or less. Measured at 3-foot intervals.
c)	☐	☐	☐	Clear width is 36 inches minimum, clear width between handrails is 36 inches minimum.
d)	☐	☐	☐	Rise for any ramp run is 30 inches maximum.
e)	☐	☐	☐	Ramps have landings at the top and the bottom of each ramp run.
f)	☐	☐	☐	Landing clear length is 60 inches minimum, running slope and cross slope of landing is 1:48 (2%) or less.
g)	☐	☐	☐	Ramps with a rise greater than 6 inches have handrails.
h)	☐	☐	☐	Ramps and landings have edge protection on both sides that prevents passage of a 4 inch diameter sphere.

Inspection Results:

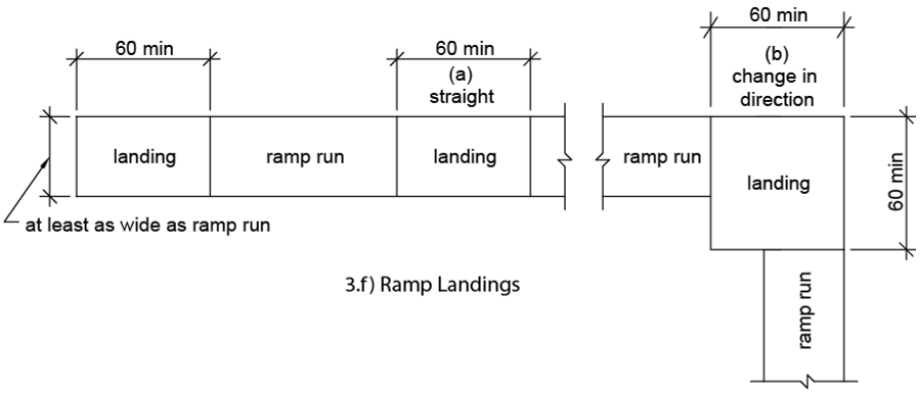

3.f) Ramp Landings

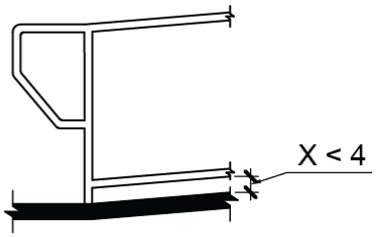

3.h) Edge Protection

4. Handrails: Verify each handrail.

	Yes	No	N/A	
a)	☐	☐	☐	Top of handrail is 34 inches minimum and 38 inches maximum vertically above walking surfaces.
b)	☐	☐	☐	Handrails extend 12 inches minimum beyond the top and bottom of ramp runs.
c)	☐	☐	☐	Free standing handrails have edge protection that prevents passage of a 4 inch diameter sphere.
d)	☐	☐	☐	Handrails extend horizontally 12 inches minimum at top of stairs.
e)	☐	☐	☐	Handrails extend at slope of the stair flight at bottom of stairs minimum one tread depth beyond last riser.
f)	☐	☐	☐	Handrail clearance is 1 ½ inches clear minimum to walls and above horizontal attachments.

Inspection Results:

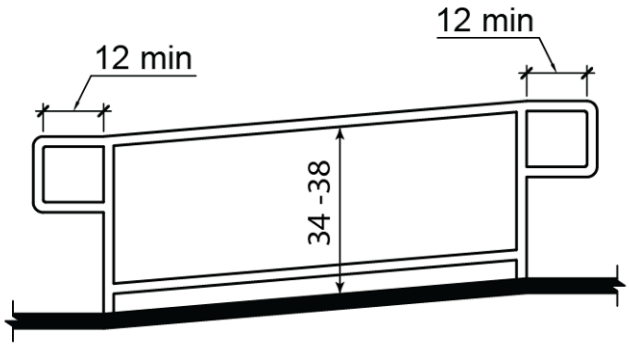

4.a,b) Handrail Extension at Top and Bottom of Ramp

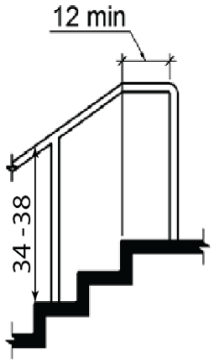

4.c) Handrail Extension at Top of Stair

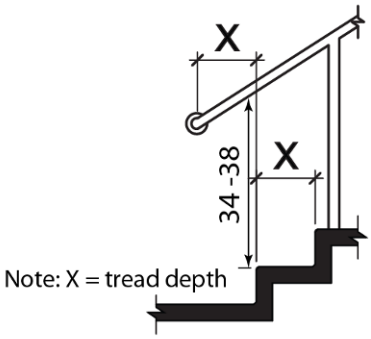

4.d) Handrail Extension at Bottom of Stair

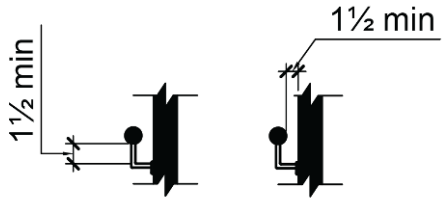

4.e) Handrail Clearance

5. Drinking fountains (Two spout heights required for each drinking fountain).
Verify fountains do not create a protruding object:

Location/Notes:

	Yes	No	N/A	
a)	☐	☐	☐	Spout outlet is 36 inches maximum above the finish floor or ground for wheelchair accessible spout.
b)	☐	☐	☐	Drinking fountain is recessed or has 27 inches maximum space from floor to bottom of fountain.
c)	☐	☐	☐	Spout outlet for standing persons is 38 inches minimum and 43 inches maximum above the finish floor.

Inspection Results:

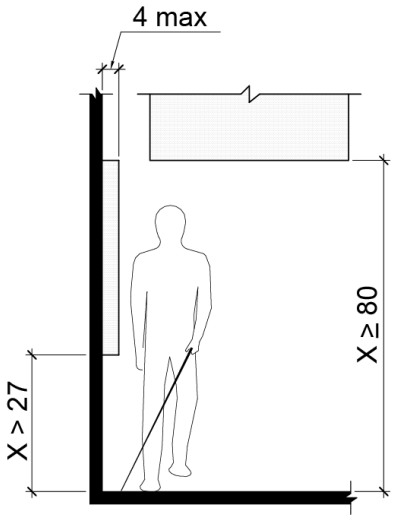

5.c) Limits of Protruding Objects

6. Toilet Compartments: Attach floor plan and note as-built dimensions on diagrams below (use additional sheet for each restroom)

Location/Notes:

	Yes	No	N/A	
a)	☐	☐	☐	Wheelchair accessible compartment is 60 inches wide min., and 59 inches deep minimum.
b)	☐	☐	☐	Ambulatory stall is 60 inches deep min. width of 35 inches min. and 37 inches max, toilet is centered in stall.
c)	☐	☐	☐	Accessible compartment has 32 inch wide door opening minimum with door opening outward, or adequate clear space for door opening inward.
d)	☐	☐	☐	Seat height is 17 inches minimum and 19 inches maximum measured to the top of the seat.
e)	☐	☐	☐	Urinal rim is 17 inches maximum above the finish floor and 13 1/2 inches deep minimum.
f)	☐	☐	☐	Urinal has a clear floor space of 30 inches wide by 48 inches long minimum.
g)	☐	☐	☐	Side wall grab bar is 42 inches long minimum, located 12 inches maximum from the rear wall.
h)	☐	☐	☐	Rear wall grab bar is 36” long min. extends from toilet centerline 12” min. one side, 24” min. other side.
i)	☐	☐	☐	Grab bar height is 33 inches minimum and 36 inches maximum.
j)	☐	☐	☐	Toilet paper dispensers are 7 inches min. and 9 inches max. in front of the toilet to centerline of the dispenser.
k)	☐	☐	☐	Toilet paper dispenser outlet is 15 inches minimum and 48 inches maximum above the finish floor.
l)	☐	☐	☐	Centerline of the wheelchair stall toilet is 16 inches min. to 18 inches max. from the side wall.
m)	☐	☐	☐	Sinks and counters are 34” max. above floor with 27” min. knee space. Drain pipes are insulated or concealed.
n)	☐	☐	☐	Space between grab bar and projecting objects below is 1 1/2 inches minimum; space above is 12 inches minimum.
o)	☐	☐	☐	Wheelchair accessible compartment and Ambulatory stall have door pulls on both sides of the door near the latch.
p)	☐	☐	☐	Hand dryers, towel and soap dispenser outlets are 48” max. above floor; mirrors above sink are 40” max. above floor.

Inspection Results:

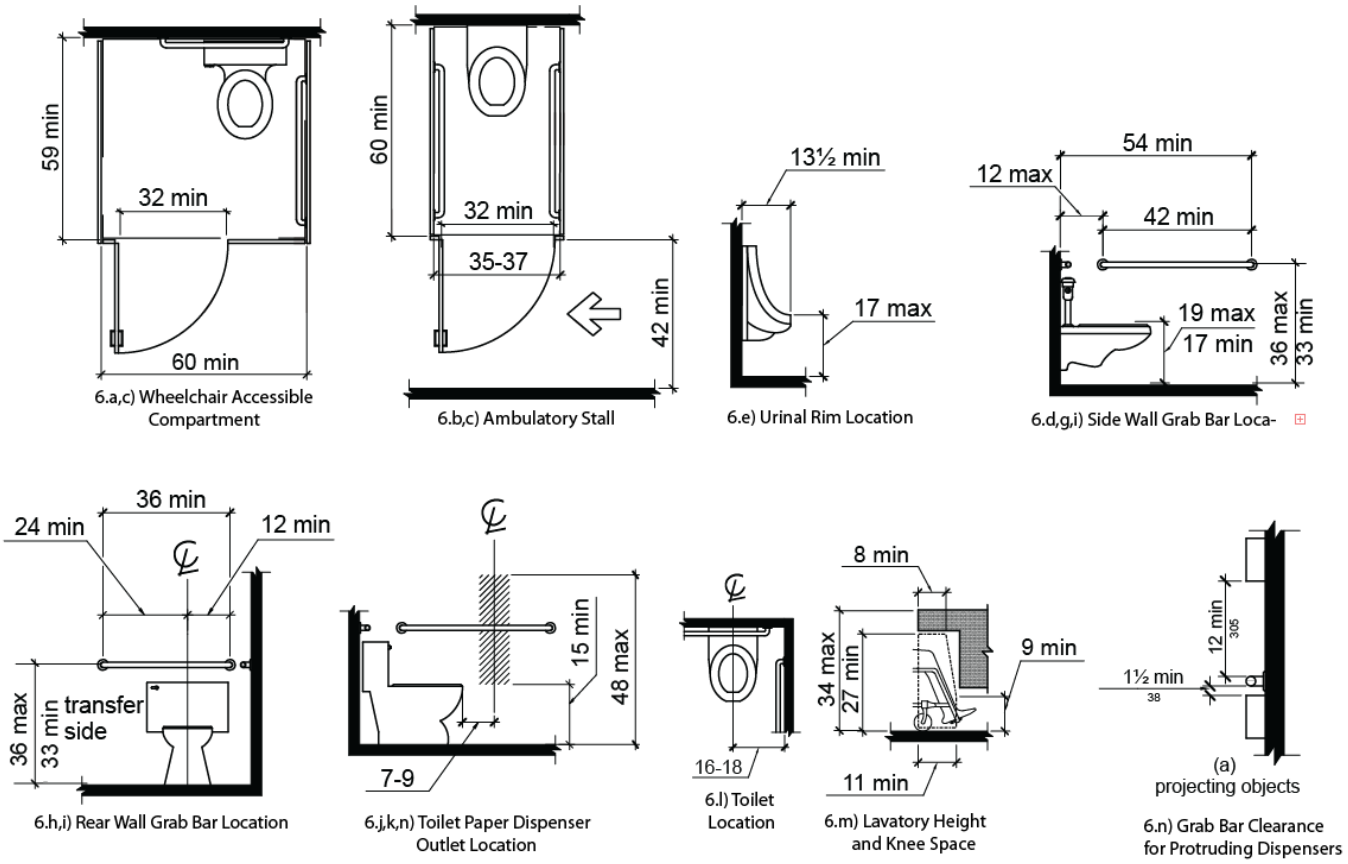

7. Service Counters, Dining and Work Surfaces: (Service counters are parallel or forward approach)

Location/Notes:

	Yes	No	N/A	
a)	☐	☐	☐	Parallel Approach. Counter is 36 inches long min. and 36 inches high max.
b)	☐	☐	☐	Forward Approach. Counter surface is 30 inches long min. and 36 inches high max, knee space under counter.
c)	☐	☐	☐	Tops of dining and work surfaces are 28 inches minimum and 34 inches maximum above the finish floor.

Inspection Results:

8. Doors: Attach accessible route plan with accessible door dimensions and threshold heights.

Location/Notes:

	Yes	No	N/A	
a)	☐	☐	☐	Door openings on accessible routes provide a clear width of 32 inches minimum.
b)	☐	☐	☐	Door closers move door from open position of 90 degrees to 12 degrees from the latch is 5 seconds min.
c)	☐	☐	☐	Spring hinge doors close from open position of 70 degrees to closed position in 1.5 seconds minimum.
d)	☐	☐	☐	Fire doors have the minimum opening force allowable by the appropriate administrative authority.
e)	☐	☐	☐	Interior hinged doors have an opening force of 5 pounds maximum.
f)	☐	☐	☐	Thresholds at doors on accessible route are 1/2 inch or less with 1/4 inch maximum vertical change.
g)	☐	☐	☐	Clear floor and wall space provide maneuvering clearances required (all doors on accessible route) in fig. 404.2.4.1

Inspection Results:

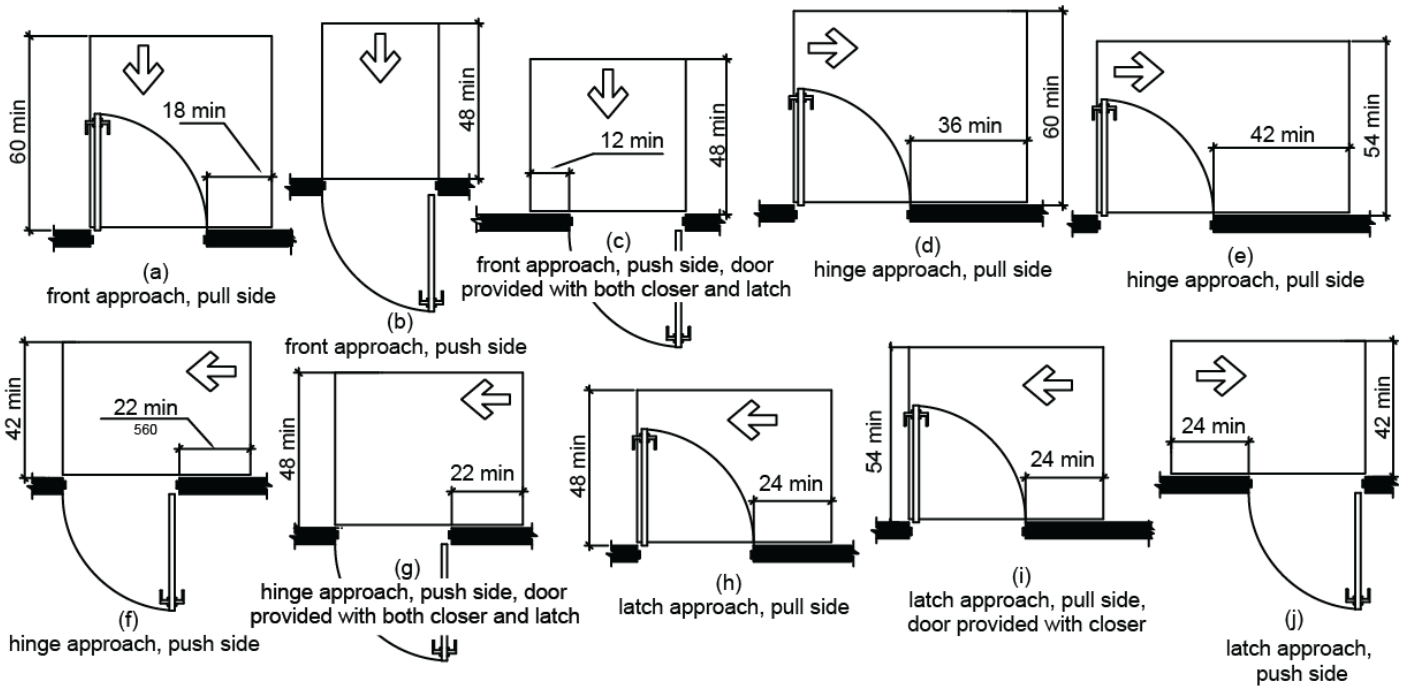

Figure 404.2.4.1 Maneuvering Clearances at Manual Swinging Doors and Gates

9. Signs:

Location/Notes:

	Yes	No	N/A	
a)	☐	☐	☐	Parking space signs are 60 inches minimum above finish ground surface measured to the bottom of the sign.
b)	☐	☐	☐	Van parking space sign includes the designation "van accessible".
c)	☐	☐	☐	Tactile characters on signs are 48 inches minimum and 60 inches maximum above the finish floor.
d)	☐	☐	☐	Sign is located alongside the door at the latch side.
e)	☐	☐	☐	Sign is located with a clear floor space of 18 inches by 18 inches minimum.

Inspection Results:

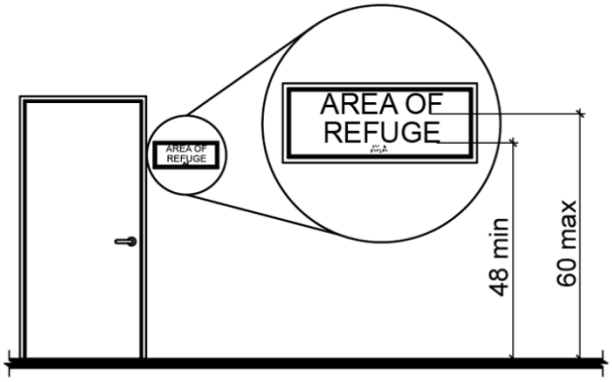

9.c) Tactile Sign Location

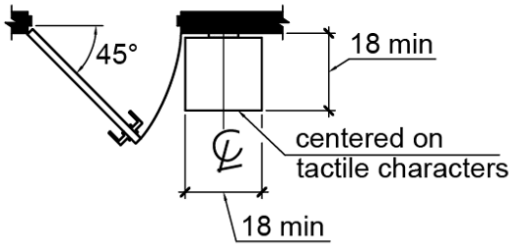

9.d,e) Tactile Sign Location

10. Other Accessible Features not covered by Report. Inspect elevators, lifts, elements for children, etc. Inspect for compliance with all requirements of the ABAAS:

Location/Notes:

Inspection Results:

CERTIFICATION:
I certify that the above inspection report is complete and correct and that this inspection is in compliance with the contract documents.

_____
Signature of Inspector

END OF SECTION 01 4000

SECTION 01 42 00 - REFERENCES

PART 1 - GENERAL

1.1 ENVIRONMENTAL DEFINITIONS

A. Definitions pertaining to sustainable development: As defined in ASTM E2114 and as specified herein.

B. Biobased Materials: As defined in the Farm Security and Rural Investment Act, for purposes of Federal procurement of biobased products, "biobased" means a "commercial or industrial product (other than food or feed) that is composed, in whole or in significant part, of biological products or renewable domestic agricultural materials (including plant, animal, and marine materials) or forestry materials." Biobased materials also include fuels, chemicals, building materials, or electric power or heat produced from biomass as defined by The Biomass Research and Development Act of 2000.

1. Biobased content: The amount of biobased carbon in the material or product as a percentage of weight (mass) of the total organic carbon in the material or product.

C. Chain-of-Custody: Process whereby a product or material is maintained under the physical possession or control during its entire life cycle.

F. Deconstruction: A process to carefully dismantle or remove and salvage usable materials from structures, as an alternative to demolition. It maximizes the recovery of building materials for reuse and recycling and minimizes the amount of waste going to a landfill. Typical deconstruction includes taking the building apart to reuse lumber, windows, doors, and other materials.DFE (Design for the Environment): A technique that includes elements of resource conservation and pollution prevention as applied in various product sectors. A technique that incorporates approaches which are part of product (or assembly) concept, need and design. Considerations involve material selection, material and energy efficiency, reuse, maintainability and design for disassembly and recyclability. Refer to ISO Guide 64 for additional clarification.Environmentally preferable products: Products and services that have a lesser or reduced effect on the environment in comparison to conventional products and services. Refer to EPA's Final Guidance on Environmentally Preferable Purchasing at http://www.epa.gov/oppt/epp/.

G. Non-Renewable Resource: A resource that exists in a fixed amount that cannot be replenished on a human time scale. Non-renewable resources have the potential for renewal only by geological, physical, and chemical processes taking place over of millions of years. Examples include: iron ore, coal, and oil.

H. Perpetual Resource: A resource that is virtually inexhaustible on a human time scale. Examples include solar energy, tidal energy, and wind energy.

I. Recycled Content Materials: Products that contain pre-consumer or post-consumer materials as all or part of their feedstock. Recycled content claim shall be consistent with Federal Trade Commission (FTC) Guide for the Use of Environmental Marketing Claims.

J. Renewable Resource: A resource that is grown, naturally replenished, or cleansed, at a rate which exceeds depletion of the usable supply of that resource. A renewable resource can be exhausted if improperly managed. However, a renewable resource can last indefinitely with proper stewardship. Examples include: trees in forests, grasses in grasslands, and fertile soil.

1.2 QUALITY ASSURANCE

A. Applicability of Standards: Unless the Contract Documents include more stringent requirements, applicable construction industry standards have the same force and effect as if bound or copied directly into the Contract Documents to the extent referenced. Such standards are made a part of the Contract Documents by reference.

B. Publication Dates: Comply with standards in effect as of date of the Contract Documents, unless otherwise indicated.

C. Conflicting Requirements: Where compliance with two or more standards is specified, and the standards may establish different or conflicting requirements for minimum quantities or quality levels comply with the most stringent requirement. Refer uncertainties and requirements that are different, but apparently equal, to Contracting Officer for a decision before proceeding.

1.3 INDUSTRY STANDARDS

A. Applicability of Standards: Unless the Contract Documents include more stringent requirements, applicable construction industry standards have the same force and effect as if bound or copied directly into the Contract Documents to the extent referenced. Such standards are made a part of the Contract Documents by reference.

B. Publication Dates: Comply with standards in effect as of date of the Contract Documents unless otherwise indicated.

C. Copies of Standards: Each entity engaged in construction on Project should be familiar with industry standards applicable to its construction activity. Copies of applicable standards are not bound with the Contract Documents.

A. ABBREVIATIONS AND ACRONYMSIndustry Organizations: Where abbreviations and acronyms are used in Specifications or other Contract Documents, they shall mean the recognized name of the entities in the following list. Names, telephone numbers, and Web sites are subject to change and are believed to be accurate and up-to-date as of the date of the Contract Documents.

AA	Aluminum Association (The) www.aluminum.org	(703) 358-2960

AABC	Associated Air Balance Council www.aabchq.com	(202) 737-0202
AAMA	American Architectural Manufacturers Association www.aamanet.org	(847) 303-5664
AASHTO	American Association of State Highway and Transportation Officials www.transportation.org	(202) 624-5800
ABAA	Air Barrier Association of America www.airbarrier.org	(866) 956-5888
ABMA	American Bearing Manufacturers Association www.abma-dc.org	(202) 367-1155
ACI	American Concrete Institute www.concrete.org	(248) 848-3700
ACPA	American Concrete Pipe Association www.concrete-pipe.org	(972) 506-7216
AEIC	Association of Edison Illuminating Companies, Inc. (The) www.aeic.org	(205) 257-2530
AF&PA	American Forest & Paper Association www.afandpa.org	(800) 878-8878 (202) 463-2700
AGA	American Gas Association www.aga.org	(202) 824-7000
AHAM	Association of Home Appliance Manufacturers www.aham.org	(202) 872-5955
AHRI	Air-Conditioning, Heating, and Refrigeration Institute, The www.ahrinet.org	(703) 524-8800
AI	Asphalt Institute www.asphaltinstitute.org	(859) 288-4960
AIA	American Institute of Architects (The) www.aia.org	(800) 242-3837 (202) 626-7300
AISC	American Institute of Steel Construction www.aisc.org	(800) 644-2400 (312) 670-2400
AISI	American Iron and Steel Institute www.steel.org	(202) 452-7100
AITC	American Institute of Timber Construction	(303) 792-9559

	www.aitc-glulam.org	
ALSC	American Lumber Standard Committee, Incorporated www.alsc.org	(301) 972-1700
AMCA	Air Movement and Control Association International, Inc. www.amca.org	(847) 394-0150
ANSI	American National Standards Institute www.ansi.org	(202) 293-8020
AOSA	Association of Official Seed Analysts, Inc. www.aosaseed.com	(405) 780-7372
APA	APA - The Engineered Wood Association www.apawood.org	(253) 565-6600
APA	Architectural Precast Association www.archprecast.org	(239) 454-6989
API	American Petroleum Institute www.api.org	(202) 682-8000
ARI	Air-Conditioning & Refrigeration Institute www.ari.org	(703) 524-8800
ARMA	Asphalt Roofing Manufacturers Association www.asphaltroofing.org	(202) 207-0917
ASCE	American Society of Civil Engineers www.asce.org	(800) 548-2723 (703) 295-6300
ASCE/SEI	American Society of Civil Engineers/Structural Engineering Institute (See ASCE)	
ASHRAE	American Society of Heating, Refrigerating and Air-Conditioning Engineers www.ashrae.org	(800) 527-4723 (404) 636-8400
ASME	ASME International (American Society of Mechanical Engineers International) www.asme.org	(800) 843-2763 (973) 882-1170
ASSE	American Society of Sanitary Engineering www.asse-plumbing.org	(440) 835-3040
ASTM	ASTM International (American Society for Testing and Materials International) www.astm.org	(610) 832-9500

ATIS	Alliance for Telecommunications Industry Solutions www.atis.org	(202) 628-6380
AWCMA	American Window Covering Manufacturers Association (Now WCMA)	
AWCI	Association of the Wall and Ceiling Industry www.awci.org	(703) 534-8300
AWI	Architectural Woodwork Institute www.awinet.org	(571) 323-3636
AWPA	American Wood Protection Association (Formerly: American Wood Preservers' Association) www.awpa.com	(205) 733-4077
AWS	American Welding Society www.aws.org	(800) 443-9353 (305) 443-9353
AWWA	American Water Works Association www.awwa.org	(800) 926-7337 (303) 794-7711
BHMA	Builders Hardware Manufacturers Association www.buildershardware.com	(212) 297-2122
BIA	Brick Industry Association (The) www.bia.org	(703) 620-0010
BICSI	BICSI, Inc. www.bicsi.org	(800) 242-7405 (813) 979-1991
BIFMA	BIFMA International (Business and Institutional Furniture Manufacturer's Association International) www.bifma.com	(616) 285-3963
BISSC	Baking Industry Sanitation Standards Committee www.bissc.org	(866) 342-4772
CCC	Carpet Cushion Council www.carpetcushion.org	(610) 527-3880
CDA	Copper Development Association www.copper.org	(800) 232-3282 (212) 251-7200
CEA	Consumer Electronics Association www.ce.org	(866) 858-1555 (703) 907-7600
CFFA	Chemical Fabrics & Film Association, Inc. www.chemicalfabricsandfilm.com	(216) 241-7333

CGA	Compressed Gas Association www.cganet.com	(703) 788-2700
CIMA	Cellulose Insulation Manufacturers Association www.cellulose.org	(888) 881-2462 (937) 222-2462
CISCA	Ceilings & Interior Systems Construction Association www.cisca.org	(630) 584-1919
CISPI	Cast Iron Soil Pipe Institute www.cispi.org	(423) 892-0137
CLFMI	Chain Link Fence Manufacturers Institute www.chainlinkinfo.org	(301) 596-2583
CPA	Composite Panel Association www.pbmdf.com	 (703) 724-1128
CRI	Carpet and Rug Institute (The) www.carpet-rug.com	(800) 882-8846 (706) 278-3176
CRRC	Cool Roof Rating Council www.coolroofs.org	(866) 465-2523 (510) 485-7175
CRSI	Concrete Reinforcing Steel Institute www.crsi.org	(847) 517-1200 (800) 328-6306
CRRC	Cool Roof Rating Council www.coolroofs.org	(866) 465-2523 (510) 485-7175
CSA	Canadian Standards Association www.csa.ca	(800) 463-6727 (416) 747-4000
CSA	CSA International (Formerly: IAS - International Approval Services) www.csa-international.org	(866) 797-4272 (416) 747-4000
CSI	Construction Specifications Institute (The) www.csinet.org	(800) 689-2900 (703) 684-0300
CTI	Cooling Technology Institute (Formerly: Cooling Tower Institute) www.cti.org	(281) 583-4087
DHI	Door and Hardware Institute www.dhi.org	(703) 222-2010
ECA	Electrical Components Association www.ec-central.org	(703)907-8024
EIA	Electronic Industries Alliance	(703) 907-7500

	www.eia.org	
EIMA	EIFS Industry Members Association www.eima.com	(800) 294-3462 (770) 968-7945
EJCDC	Engineers Joint Contract Documents Committee http://content.asce.org/ejcdc/	(703) 295-6000
EJMA	Expansion Joint Manufacturers Association, Inc. www.ejma.org	(914) 332-0040
ESD	ESD Association (Electrostatic Discharge Association) www.esda.org	(315) 339-6937
ETL SEMCO	Intertek ETL SEMCO (Formerly: ITS - Intertek Testing Service NA) www.intertek-etlsemko.com	(800) 967-5352
FM Approvals	FM Approvals LLC www.fmglobal.com	(781) 762-4300
FM Global	FM Global (Formerly: FMG - FM Global) www.fmglobal.com	(401) 275-3000
FRSA	Florida Roofing, Sheet Metal & Air Conditioning Contractors Association, Inc. www.floridaroof.com	(407) 671-3772
FSA	Fluid Sealing Association www.fluidsealing.com	(610) 971-4850
FSC	Forest Stewardship Council www.fsc.org	49 228 367 66 0
GA	Gypsum Association www.gypsum.org	(301) 277-8686
GANA	Glass Association of North America www.glasswebsite.com	(785) 271-0208
GRI	(Part of GSI)	
GS	Green Seal www.greenseal.org	(202) 872-6400
GSI	Geosynthetic Institute www.geosynthetic-institute.org	(610) 522-8440
HI	Hydronics Institute	(908) 464-8200

	www.gamanet.org	
HI/GAMA	Hydronics Institute/Gas Appliance Manufacturers Association Division of Air-Conditioning, Heating, and Refrigeration Institute (AHRI) www.ahrinet.org	(908) 464-8200
HMMA	Hollow Metal Manufacturers Association (Part of NAAMM)	
HPVA	Hardwood Plywood & Veneer Association www.hpva.org	(703) 435-2900
HPW	H. P. White Laboratory, Inc. www.hpwhite.com	(410) 838-6550
IAPSC	International Association of Professional Security Consultants www.iapsc.org	(515) 282-8192
ICBO	International Conference of Building Officials www.iccsafe.org	(888) 422-7233
ICEA	Insulated Cable Engineers Association, Inc. www.icea.net	(770) 830-0369
ICRI	International Concrete Repair Institute, Inc. www.icri.org	(847) 827-0830
ICPA	International Cast Polymer Association www.icpa-hq.org	(703) 525-0320
IEC	International Electrotechnical Commission www.iec.ch	41 22 919 02 11
IEEE	Institute of Electrical and Electronics Engineers, Inc. (The) www.ieee.org	(212) 419-7900
IES	Illuminating Engineering Society of North America www.iesna.org	(703) 525-0320
IEST	Institute of Environmental Sciences and Technology www.iest.org	(847) 255-1561
IGMA	Insulating Glass Manufacturers Alliance www.igmaonline.org	(613) 233-1510
ILI	Indiana Limestone Institute of America, Inc. www.iliai.com	(812) 275-4426
ISA	Instrumentation, Systems, and Automation Society, The www.isa.org	(919) 549-8411

ISO	International Organization for Standardization www.iso.ch	41 22 749 01 11
ISSFA	International Solid Surface Fabricators Association www.issfa.net	(877) 464-7732 (801) 341-7360
ITS	Intertek Testing Service NA (Now ETL SEMCO)	
ITU	International Telecommunication Union www.itu.int/home	41 22 730 51 11
KCMA	Kitchen Cabinet Manufacturers Association www.kcma.org	(703) 264-1690
LGSEA	Light Gauge Steel Engineers Association www.arcat.com	(202) 263-4488
LMA	Laminating Materials Association (Now part of CPA)	
LPI	Lightning Protection Institute www.lightning.org	(800) 488-6864
MBMA	Metal Building Manufacturers Association www.mbma.com	(216) 241-7333
MCA	Metal Construction Association www.metalconstruction.org	(847) 375-4718
MFMA	Maple Flooring Manufacturers Association, Inc. www.maplefloor.org	(888) 480-9138
MFMA	Metal Framing Manufacturers Association, Inc. www.metalframingmfg.org	(312) 644-6610
MH	Material Handling (Now MHIA)	
MHIA	Material Handling Industry of America www.mhia.org	(800) 345-1815 (704) 676-1190
MIA	Marble Institute of America www.marble-institute.com	(440) 250-9222
MPI	Master Painters Institute www.paintinfo.com	(888) 674-8937 (604) 298-7578
MSS	Manufacturers Standardization Society of The Valve and Fittings Industry Inc.	(703) 281-6613

	www.mss-hq.com	
NAAMM	National Association of Architectural Metal Manufacturers www.naamm.org	(630) 942-6591
NACE	NACE International (National Association of Corrosion Engineers International) www.nace.org	(800) 797-6223 (281) 228-6200
NADCA	National Air Duct Cleaners Association www.nadca.com	(202) 737-2926
NAIMA	North American Insulation Manufacturers Association www.naima.org	(703) 684-0084
NCAA	National Collegiate Athletic Association (The) www.ncaa.org	(317) 917-6222
NCMA	National Concrete Masonry Association www.ncma.org	(703) 713-1900
NCTA	National Cable & Telecommunications Association www.ncta.com	(202) 222-2300
NEBB	National Environmental Balancing Bureau www.nebb.org	(301) 977-3698
NECA	National Electrical Contractors Association www.necanet.org	(301) 657-3110
NeLMA	Northeastern Lumber Manufacturers' Association www.nelma.org	(207) 829-6901
NEMA	National Electrical Manufacturers Association www.nema.org	(703) 841-3200
NETA	International Electrical Testing Association www.netaworld.org	(888) 300-6382 (269) 488-6382
NFHS	National Federation of State High School Associations www.nfhs.org	(317) 972-6900
NFPA	NFPA (National Fire Protection Association) www.nfpa.org	(800) 344-3555 (617) 770-3000
NFRC	National Fenestration Rating Council www.nfrc.org	(301) 589-1776
NGA	National Glass Association www.glass.org	(866) 342-5642 (703) 442-4890

NHLA	National Hardwood Lumber Association www.natlhardwood.org	(800) 933-0318 (901) 377-1818
NLGA	National Lumber Grades Authority www.nlga.org	(604) 524-2393
NOFMA	NOFMA: The Wood Flooring Manufacturers Association (Formerly: National Oak Flooring Manufacturers Association) www.nofma.org	(901) 526-5016
NOMMA	National Ornamental & Miscellaneous Metals Association www.nomma.org	(888) 516-8585
NRCA	National Roofing Contractors Association www.nrca.net	(800) 323-9545 (847) 299-9070
NRMCA	National Ready Mixed Concrete Association www.nrmca.org	(888) 846-7622 (301) 587-1400
NSF	NSF International (National Sanitation Foundation International) www.nsf.org	(800) 673-6275 (734) 769-8010
NSSGA	National Stone, Sand & Gravel Association www.nssga.org	(800) 342-1415 (703) 525-8788
NTMA	National Terrazzo & Mosaic Association, Inc. (The) www.ntma.com	(800) 323-9736 (540) 751-0930
NWFA	National Wood Flooring Association www.nwfa.org	(800) 422-4556 (636) 519-9663
PCI	Precast/Prestressed Concrete Institute www.pci.org	(312) 786-0300
PDI	Plumbing & Drainage Institute www.pdionline.org	(800) 589-8956 (978) 557-0720
PGI	PVC Geomembrane Institute http://pgi-tp.cee.uiuc.edu	(217) 333-3929
PTI	Post-Tensioning Institute www.post-tensioning.org	(248) 848-3180
RCSC	Research Council on Structural Connections www.boltcouncil.org	
RFCI	Resilient Floor Covering Institute www.rfci.com	(706) 882-3833

RIS	Redwood Inspection Service www.redwoodinspection.com	(925) 935-1499
SAE	SAE International www.sae.org	(877) 606-7323 (724) 776-4841
SCAQMD	South Coast Air Quality Management District www.aqmd.com	(909) 396-2000
SCTE	Society of Cable Telecommunications Engineers www.scte.org	(800) 542-5040 (610) 363-6888
SDI	Steel Deck Institute www.sdi.org	(847) 458-4647
SDI	Steel Door Institute www.steeldoor.org	(440) 899-0010
SEFA	Scientific Equipment and Furniture Association www.sefalabs.com	(877) 294-5424 (516) 294-5424
SEI/ASCE	Structural Engineering Institute/American Society of Civil Engineers (See ASCE)	
SIA	Security Industry Association www.siaonline.org	(866) 817-8888 (703) 683-2075
SJI	Steel Joist Institute www.steeljoist.org	(843) 626-1995
SMA	Screen Manufacturers Association www.smacentral.org	(561) 533-0991
SMACNA	Sheet Metal and Air Conditioning Contractors' National Association www.smacna.org	(703) 803-2980
SPFA	Spray Polyurethane Foam Alliance (Formerly: SPI/SPFD - The Society of the Plastics Industry, Inc.; Spray Polyurethane Foam Division) www.sprayfoam.org	(800) 523-6154
SPIB	Southern Pine Inspection Bureau (The) www.spib.org	(850) 434-2611
SPRI	Single Ply Roofing Industry www.spri.org	(781) 647-7026
SSINA	Specialty Steel Industry of North America www.ssina.com	(800) 982-0355 (202) 342-8630

SSPC	SSPC: The Society for Protective Coatings www.sspc.org	(877) 281-7772 (412) 281-2331
STI	Steel Tank Institute www.steeltank.com	(847) 438-8265
SWI	Steel Window Institute www.steelwindows.com	(216) 241-7333
SWPA	Submersible Wastewater Pump Association www.swpa.org	(847) 681-1868
TCA	Tilt-Up Concrete Association www.tilt-up.org	(319) 895-6911
TCNA	Tile Council of North America, Inc. www.tileusa.com	(864) 646-8453
TEMA	Tubular Exchanger Manufacturers Association www.tema.org	(914) 332-0040
TIA/EIA	Telecommunications Industry Association/Electronic Industries Alliance www.tiaonline.org	(703) 907-7700
TMS	The Masonry Society www.masonrysociety.org	(303) 939-9700
TPI	Truss Plate Institute, Inc. www.tpinst.org	(703) 683-1010
TRI	Tile Roofing Institute www.tileroofing.org	(312) 670-4177
UL	Underwriters Laboratories Inc. www.ul.com	(877) 854-3577 (847) 272-8800
UNI	Uni-Bell PVC Pipe Association www.uni-bell.org	(972) 243-3902
USGBC	U.S. Green Building Council www.usgbc.org	(800) 795-1747
USITT	United States Institute for Theatre Technology, Inc. www.usitt.org	(800) 938-7488 (315) 463-6463
WASTEC	Waste Equipment Technology Association www.wastec.org	(800) 424-2869 (202) 244-4700
WCLIB	West Coast Lumber Inspection Bureau	(800) 283-1486

	www.wclib.org	(503) 639-0651
WCMA	Window Covering Manufacturers Association www.wcmanet.org	(212) 297-2122
WDMA	Window & Door Manufacturers Association (Formerly: NWWDA - National Wood Window and Door Association) www.wdma.com	(800) 223-2301 (312) 321-6802
WI	Woodwork Institute (Formerly: WIC - Woodwork Institute of California) www.wicnet.org	(916) 372-9943
WMMPA	Wood Moulding & Millwork Producers Association www.wmmpa.com	(800) 550-7889 (530) 661-9591
WSRCA	Western States Roofing Contractors Association www.wsrca.com	(800) 725-0333 (650) 570-5441
WWPA	Western Wood Products Association www.wwpa.org	(503) 224-3930

B. Code Agencies: Where abbreviations and acronyms are used in Specifications or other Contract Documents, they shall mean the recognized name of the entities in the following list. Names, telephone numbers, and Web sites are subject to change and are believed to be accurate and up-to-date as of the date of the Contract Documents.

DIN	Deutsches Institut fur Normung e.V. www.din.de	49 30 2601-0
IAPMO	International Association of Plumbing and Mechanical Officials www.iapmo.org	(909) 472-4100
ICC	International Code Council www.iccsafe.org	(888) 422-7233
ICC-ES	ICC Evaluation Service, Inc. www.icc-es.org	(800) 423-6587 (562) 699-0543

C. Federal Government Agencies: Where abbreviations and acronyms are used in Specifications or other Contract Documents, they shall mean the recognized name of the entities in the following list. Names, telephone numbers, and Web sites are subject to change and are believed to be accurate and up-to-date as of the date of the Contract Documents.

ADAAG	Americans with Disabilities Act Accessibility Guidelines	(800) 872-2253

ABAAS	Architectural Barriers Act Accessibility Standards Accessibility Guidelines/Standards for Buildings and Facilities Available from U.S. Access Board www.access-board.gov	(202) 272-0080
COE	Army Corps of Engineers www.usace.army.mil	(202) 761-0011
CPSC	Consumer Product Safety Commission www.cpsc.gov	(800) 638-2772 (301) 504-7923
DOC	Department of Commerce www.commerce.gov	(202) 482-2000
DOD	Department of Defense http://dodssp.daps.dla.mil	(215) 697-6257
DOJ	Department of Justice www.justice.gov	(202) 514-2000
DOE	Department of Energy www.energy.gov	(202) 586-9220
EPA	Environmental Protection Agency www.epa.gov	(202) 272-0167
FAA	Federal Aviation Administration www.faa.gov	(866) 835-5322
FCC	Federal Communications Commission www.fcc.gov	(888) 225-5322
FDA	Food and Drug Administration www.fda.gov	(888) 463-6332
GSA	General Services Administration www.gsa.gov	(800) 488-3111
HUD	Department of Housing and Urban Development www.hud.gov	(202) 708-1112
LBL	Lawrence Berkeley National Laboratory www.lbl.gov	(510) 486-4000
NCHRP	National Cooperative Highway Research Program (See TRB)	
NIST	National Institute of Standards and Technology www.nist.gov	(301) 975-6478
OSHA	Occupational Safety & Health Administration	(800) 321-6742

	www.osha.gov	(202) 693-1999
PBS	Public Buildings Service (See GSA)	
PHS	Office of Public Health and Science http://www.hhs.gov/ophs/	(202) 690-7694
RUS	Rural Utilities Service (See USDA)	(202) 720-9540
SD	State Department www.state.gov	(202) 647-4000
TRB	Transportation Research Board http://gulliver.trb.org	(202) 334-2934
USDA	Department of Agriculture www.usda.gov	(202) 720-2791
USP	U.S. Pharmacopeia www.usp.org	(800) 227-8772
USPS	Postal Service www.usps.com	(202) 268-2000

D. Standards and Regulations: Where abbreviations and acronyms are used in Specifications or other Contract Documents, they shall mean the recognized name of the standards and regulations in the following list. Names, telephone numbers, and Web sites are subject to change and are believed to be accurate and up-to-date as of the date of the Contract Documents.

ADAABAAG	Americans with Disabilities Act, Architectural Barriers Act, Accessibility Guidelines www.access-board.gov	(202) 272-0080
CFR	Code of Federal Regulations Available from Government Printing Office www.gpoaccess.gov/cfr/index.html	(866) 512-1800 (202) 512-1800
DOD	Department of Defense Military Specifications and Standards Available from Department of Defense Single Stock Point http://dodssp.daps.dla.mil	(215) 697-2664
DSCC	Defense Supply Center Columbus (See FS)	
FED-STD	Federal Standard (See FS)	

FS	Federal Specification Available from Department of Defense Single Stock Point http://dodssp.daps.dla.mil/	(215) 697-2664
	Available from Defense Standardization Program www.dsp.dla.mil	
	Available from General Services Administration www.gsa.gov	(202) 619-8925
	Available from National Institute of Building Sciences www.wbdg.org/ccb	(202) 289-7800
FTMS	Federal Test Method Standard (See FS)	
MIL	(See MILSPEC)	
MIL-STD	(See MILSPEC)	
MILSPEC	Military Specification and Standards Available from Department of Defense Single Stock Point http://dodssp.daps.dla.mil	(215) 697-2664

E. State and Local Government Agencies: Where abbreviations and acronyms are used in Specifications or other Contract Documents, they shall mean the recognized name of the entities in the following list. Names, telephone numbers, and Web sites are subject to change and are believed to be accurate and up-to-date as of the date of the Contract Documents.

BAAQD	Bay Area Air Quality Management District www.baaqmd.gov	(415) 749-4900
CASQA	California Stormwater Quality Association www.casqa.org	(650) 366-1042
SWRCB	San Francisco Bay Regional Water Quality Control Board, www.waterboards.ca.gov/sanfranciscobay /	(510) 622-2300
CCC	California Coastal Commission http://www.coastal.ca.gov/index.html	(415) 904-5200
CDFG	California Department of Fish and Game - Bay Delta Region www.wildlife.ca.gov/Regions/3	(707) 944-5500
CBHF	State of California, Department of Consumer Affairs Bureau of Home Furnishings and Thermal Insulation www.dca.ca.gov/bhfti	(800) 952-5210 (916) 574-2041
CalTrans	California Department of Transportation, District 4	(510) 286-4444

	www.dot.ca.gov/dist4	
CCR	California Code of Regulations www.calregs.com	(916) 323-6815
CDHS	California Department of Health Services www.dhcs.ca.gov	(916) 445-4171
CDPH	California Department of Public Health, Indoor Air Quality Section www.cal-iaq.org	
CPUC	California Public Utilities Commission www.cpuc.ca.gov	(415) 703-2782

1.5 ENVIRONMENTAL REFERENCE STANDARDS

A. American Forest and Paper Association:

1. Sustainable Forestry Initiative

B. American Society of Heating Refrigerating and Air Conditioning Engineers (ASHRAE):

1. ASHRAE 52.2, Method of Testing General Ventilation Air Cleaning Devices for Removal Efficiency by Particle Size
2. ASHRAE 55, Thermal Environmental Conditions for Human Occupancy
3. ASHRAE 62.1, Ventilation for Acceptable Indoor Air Quality
4. ASHRAE 62.2, Ventilation and Acceptable Indoor Air Quality in Low-Rise Residential Buildings
5. ASHRAE/IESNA 90.1, Energy Standard for Buildings, Except Low-Rise Residential Buildings
6. ASHRAE 90.2, Energy Efficient Design of Low-Rise Residential Buildings

C. American Association of State Highway and Transportation Officials (AASHTO):

1. AASHTO M288 Geotextile Specification for Highway Applications
2. MP009-06 Standard Specification for Compost for Erosion/Sediment Control (Filter Berms and Filter Socks)
3. MP010-03 Standard Specification for Compost for Erosion/Sediment Control (Compost Blankets)

D. American Society for Testing and Materials International (ASTM):

1. A478 Standard Specification for Chromium-Nickel Stainless Steel Weaving and Knitting Wire
2. A580/A580M Standard Specification for Stainless Steel Wire
3. A653/A653M Standard Specification for Steel Sheet, Zinc-Coated (Galvanized) or Zinc-Iron Alloy-Coated (Galvannealed) by the Hot-Dip Process
4. B813 Standard Specification for Liquid and Paste Fluxes for Soldering of Copper and Copper Alloy Tube

5. C1240 Standard Specification for Silica Fume Used in Cementitious Mixtures
6. C128 Standard Test Method for Density, Relative Density (Specific Gravity), and Absorption of Fine Aggregate
7. C131 Standard Test Method for Resistance to Degradation of Small-Size Coarse Aggregate by Abrasion and Impact in the Los Angeles Machine
8. C1319 Standard Specification for Concrete Grid Paving Units
9. C1338 Standard Test Method for Determining Fungi Resistance of Insulation Materials and Facings
10. C136 Standard Test Method for Sieve Analysis of Fine and Coarse Aggregates
11. C1371 Standard Test Method for Determination of Emittance of Materials Near Room Temperature Using Portable Emissometers
12. C1386 Standard Specification for Precast Autoclaved AERATED Concrete (PAAC) Wall Construction Units
13. C1483 Standard Specification for Exterior Solar Radiation Control Coatings on Buildings
14. C1549 Standard Test Method for Determination of Solar Reflectance Near Ambient Temperature Using a Portable Solar Reflectometer
15. C1601 Standard Test Method for Field Determination of Water Penetration of Masonry Wall Surfaces
16. C289 Standard Test Method for Potential Alkali-Silica Reactivity of Aggregates (Chemical Method)
17. C311 Test Methods for Sampling and Testing Fly Ash or Natural Pozzolans for Use as a Mineral Admixture in Portland-Cement Concrete
18. C33 Standard Specification for Concrete Aggregates
19. C593 Standard Specification for Fly Ash and Other Pozzolans for Use with Lime
20. C595 Standard Specification for Blended Hydraulic Cements
21. C618 Standard Specification for Coal Fly Ash and Raw or Calcined Natural Pozzolan for Use as a Mineral Admixture in Concrete
22. C67 Standard Test Methods for Sampling and Testing Brick and Structural Clay Tile
23. C739 Standard Specification for Cellulosic Fiber (Wood-Base) Loose-Fill Thermal Insulation
24. C936 Standard Specification for Interlocking Concrete Paver Units
25. C989 Standard Specification for Ground Granulated Blast-Furnace Slag for Use in Concrete and Mortars
26. D1435 Standard Practice for Outdoor Weathering of Plastics
27. D1557 Standard Test Methods for Laboratory Compaction Characteristics of Soil Using Modified Effort (56,000 ft-lbf/ft3(2,700 kN-m/m3))
28. D1972 Standard Practice for Generic Marking of Plastic Products
29. D198 Standard Test Methods of Static Tests of Lumber in Structural Sizes
30. D2103 Standard Specification for Polyethylene Film and Sheeting
31. D217 Standard Test Methods for Cone Penetration of Lubricating Grease
32. D2369 Standard Test Method for Volatile Content of Coatings
33. D3273 Standard Test Method for Resistance to Growth of Mold on the Surface of Interior Coatings in an Environmental Chamber

34. D3786 Standard Test Method for Hydraulic Bursting Strength of Textile Fabrics-Diaphragm Bursting Strength Tester Method
35. D3792 Standard Test Method for Water Content of Coatings by Direct Injection into a Gas Chromatograph
36. D3864 Standard Guide for Continual On-Line Monitoring Systems for Water Analysis
37. D3960 Standard Practice for Determining Volatile Organic Compound (VOC) Content of Paints and Related Coatings
38. D4017 Standard Test Method for Water in Paints and Paint Materials by Karl Fischer Method
39. D4263 Standard Test Method for Indicating Moisture in Concrete by the Plastic Sheet Method
40. D4444 Standard Test Methods for Use and Calibration of Hand-Held Moisture Meters
41. D4491 Standard Test Methods for Water Permeability of Geotextiles by Permittivity
42. D4552 Standard Practice for Classifying Hot-Mix Recycling Agents
43. D4632 Standard Test Method for Grab Breaking Load and Elongation of Geotextiles
44. D4716 Test Method for Determining the (In-plane) Flow Rate per Unit Width and Hydraulic Transmissivity of a Geosynthetic Using a Constant Head
45. D4833 Standard Test Method for Index Puncture Resistance of Geotextiles, Geomembranes, and Related Product
46. D4840 Standard Guide for Sampling Chain-of-Custody Procedures
47. D4887 Standard Test Method for Preparation of Viscosity Blends for Hot Recycled Bituminous Materials
48. D5106 Standard Specification for Steel Slag Aggregates for Bituminous Paving Mixtures
49. D5116 Standard Guide for Small-Scale Environmental Chamber Determinations of Organic Emissions from Indoor Materials/Products
50. D5199 Standard Test Method for Measuring the Nominal Thickness of Geosynthetics
51. D5261 Standard Test Method for Measuring Mass per Unit Area of Geotextiles
52. D5268 Standard Specification for Topsoil Used for Landscaping Purposes
53. D5359 Standard Specification for Glass Cullet Recovered from Waste for Use in Manufacture of Glass Fiber
54. D5505 Standard Practice for Classifying Emulsified Recycling Agents
55. D5509 Standard Practice for Exposing Plastics to a Simulated Compost Environment
56. D5512 Standard Practice for Exposing Plastics to a Simulated Compost Environment Using an Externally Heated Reactor
57. D5539 Standard Specification for Seed Starter Mix
58. D5957 Standard Guide for Flood Testing Horizontal Waterproofing Installations
59. D5603 Standard Classification for Rubber Compounding Materials—Recycled Vulcanizate Particulate Rubber
60. D5663 Standard Guide for Validating Recycled Content in Packaging Paper and Paperboard
61. D5759 Standard Guide for Characterization of Coal Fly Ash and Clean Coal Combustion Fly Ash for Potential Uses
62. D5792 Standard Practice for Generation of Environmental Data Related to Waste Management Activities: Development of Data Quality Objectives

63. D5834 Standard Guide for Source Reduction Reuse, Recycling, and Disposal of Solid and Corrugated Fiberboard (Cardboard)
64. D5851 Standard Guide for Planning and Implementing a Water Monitoring Program
65. D5852 Standard Test Method for Erodibility Determination of Soil in the Field or in the Laboratory by the Jet Index Method
66. D6002 Standard Guide for Assessing the Compostability of Environmentally Degradable Plastics
67. D6006 Standard Guide for Assessing Biodegradability of Hydraulic Fluid
68. D6007 Standard Test Method for Determining Formaldehyde Concentration in Air from Wood Products Using a Small Scale Chamber
69. D6046 Standard Classification of Hydraulic Fluids for Environmental Impact
70. D6081 Standard Practice for Aquatic Toxicity Testing of Lubricants: Sample Preparation and Results Interpretation
71. D6108 Standard Test Method for Compressive Properties of Plastic Lumber and Shapes
72. D6109 Standard Test Methods for Flexural Properties of Unreinforced and Reinforced Plastic Lumber
73. D6112 Standard Test Methods for Compressive and Flexural creep and Creep-Rupture of Plastic Lumber and Shapes
74. D6117 Standard Test Methods for Mechanical Fasteners in Plastic Lumber and Shapes
75. D6155 Standard Specification for Nontraditional Coarse Aggregates for Bituminous Paving Mixtures
76. D6245 Standard Guide for Using Indoor Carbon Dioxide Concentrations to Evaluate Indoor Air Quality and Ventilation
77. D6261 Standard Specification for Extruded and Compression Molded Basic Shapes Made from Thermoplastic Polyester (TPES)
78. D6262 Standard Specification for Extruded, Compression Molded, and Injection Molded Basic Shapes of Poly (aryl ether ketone) (PAEK)
79. D6270 Standard Practice for Use of Scrap Tires in Civil Engineering Applications
80. D6329 Standard Guide for Developing Methodology for Evaluating the Ability of Indoor Materials to Support Microbial Growth Using Static Environmental Chambers
81. D6330 Standard Practice for Determination of Volatile Organic Compounds (Excluding Formaldehyde) Emissions from Wood-Based Panels Using Small Environmental Chambers Under Defined Test Conditions
82. D6345 Standard Guide for Selection of Methods for Active, Integrative Sampling of Volatile Organic Compounds in Air
83. D6400 Standard Specification for Compostable Plastics
84. D6435 Standard Test Method for Shear Properties of Plastic Lumber and Plastic Lumber Shapes
85. D6629 Standard Guide for Selection of Methods for Estimating Soil Loss by Erosion
86. D6662 Standard Specification for Polyolefin-Based Plastic Lumber Decking Boards
87. D6712 Standard Specification for Ultra-High-Molecular-Weight Polyethylene (UHMW-PE) Solid Plastic Shapes
88. D6886 Standard Test Method for Determination of the Weight Percent Individual Volatile Organic Compounds in Waterborne Air-Dry Coatings by Gas Chromatography
89. D692 Standard Specification for Coarse Aggregate for Bituminous Paving Mixtures

90. D696 Standard Test Method for Coefficient of Linear Thermal Expansion of Plastics Between -30°C and 30°C with a Vitreous Silica Dilatometer
91. D698 Standard Test Methods for Laboratory Compaction Characteristics of Soil Using Standard Effort (12,400 ft-lbf/ft3 (600 kN-m/m3))
92. D7186 Standard Practice for Quality Assurance Observation of Roof Construction and Repair
93. E1021 Standard Test Methods for Measuring Spectral Response of Photovoltaic Cells
94. E1038 Standard Test Method for Determining Resistance of Photovoltaic Modules to Hail by Impact with Propelled Ice Balls
95. E1039 Standard Test Method for Calibration of Silicon Non-Concentrator Photovoltaic Primary Reference Cells Under Global Irradiation
96. E1040 Standard Specification for Physical Characteristics of Nonconcentrator Terrestrial Photovoltaic Reference Cells
97. E1105 Standard Test Method for Field Determination of Water Penetration of Installed Exterior Windows, Skylights, Doors, and Curtain Walls by Uniform or Cyclic Static Air Pressure Difference
98. E1171 Standard Test Method for Photovoltaic Modules in Cyclic Temperature and Humidity Environments
99. E1333 Standard Test Method for Determining Formaldehyde Concentrations in Air and Emission Rates from Wood Products Under Defined Test Conditions Using a Large Chamber
100. E1362 Standard Test Method for Calibration of Non-Concentrator Photovoltaic Secondary Reference Cells
101. E1433 Standard Guide for Selection of Standards on Environmental Acoustics
102. E1462 Standard Test Methods for Insulation Integrity and Ground Path Continuity of Photovoltaic Modules
103. E1596 Standard Test Methods for Solar Radiation Weathering of Photovoltaic Modules
104. E1597 Standard Test Method for Saltwater Pressure Immersion and Temperature Testing of Photovoltaic Modules for Marine Environments
105. E1609 Standard Guide for Development and Implementation of a Pollution Prevention Program
106. E1686 Standard Guide for Selection of Environmental Noise Measurements and Criteria
107. E1690 Standard Test Method for Determination of Ethanol Extractives in Biomass
108. E1721 Standard Test Method for Determination of Acid-Insoluble Residue in Biomass
109. E1755 Standard Test Method for Ash in Biomass
110. E1758 Standard Test Method for Determination of Carbohydrates in Biomass by High Performance Liquid Chromatography
111. E1780 Standard Guide for Measuring Outdoor Sound Received from a Nearby Fixed Source
112. E1799 Standard Practice for Visual Inspections of Photovoltaic Modules
113. E1802 Standard Test Methods for Wet Insulation Integrity Testing of Photovoltaic Modules
114. E1821 Standard Test Method for Determination of Carbohydrates in Biomass by Gas Chromatography

115. E1827 Standard Test Methods for Determining Airtightness of Buildings Using an Orifice Blower Door
116. E1830 Standard Test Methods for Determining Mechanical Integrity of Photovoltaic Modules
117. E1861 Standard Guide for Use of Coal Combustion By-Products in Structural Fills
118. E1918 Standard Test Method for Measuring Solar Reflectance of Horizontal and Low-Sloped Surfaces in the Field
119. E1971 Standard Guide for Stewardship for the Cleaning of Commercial and Institutional Buildings
120. E1980 Standard Practice for Calculating Solar Reflectance Index of Horizontal and Low-Sloped Opaque Surfaces
121. E1991 Standard Guide for Environmental Life Cycle Assessment of Building Materials/Products
122. E2047 Standard Test Method for Wet Insulation Integrity Testing of Photovoltaic Arrays
123. E2114 Standard Terminology for Sustainability Relative to the Performance of Buildings
124. E2128 Standard Guide for Evaluating Water Leakage of Building Walls
125. E2129 Standard Practice for Data Collection for Sustainability Assessment of Building Products
126. E2397 Standard Practice for Determination of Dead Loads and Live Loads associated with Green Roof Systems
127. E2398 Standard Test Method for Water Capture and Media Retention of Geocomposite Drain Layers for Green Roof Systems
128. E2399 Standard Test Method for Maximum Media Density for Dead Load Analysis of Green Roof Systems
129. E2400 Standard Guide for Selection, Installation, and Maintenance of Plants for Green Roof Systems
130. E241 Standard Guide for Limiting Water-Induced Damage to Buildings
131. E2432 Standard Guide for General Principles of Sustainability Relative to Buildings
132. E408 Standard Test Methods for Total Normal Emittance of Surfaces Using Inspection-Meter Techniques
133. E413 Standard Classification for Rating Sound Insulation
134. E477 Standard Test Method for Measuring Acoustical and Airflow Performance of Duct Liner Materials and Prefabricated Silencers
135. E648 Standard Test Method for Critical Radiant Flux of Floor-Covering Systems Using a Radiant Heat Energy Source
136. E683 Standard Practice for Installation and Service of Solar Space Heating Systems for One- and Two-Family Dwellings
137. E779 Standard Test Method for Determining Air Leakage Rate by Fan Pressurization
138. E781 Standard Practice for Evaluating Absorptive Solar Receiver Materials When Exposed to Conditions Simulating Stagnation in Solar Collectors with Cover Plates
139. E782 Standard Practice for Exposure of Cover Materials for Solar Collectors to Natural Weathering Under Conditions Simulating Operational Mode
140. E823 Standard Practice for Nonoperational Exposure and Inspection of a Solar Collector
141. E881 Standard Practice for Exposure of Solar Collector Cover Materials to Natural Weathering Under Conditions Simulating Stagnation Mode

142. E90 Standard Test Method for Laboratory Measurement of Airborne Sound Transmission Loss of Building Partitions and Elements
143. E903 Standard Test Method for Solar Absorptance, Reflectance, and Transmittance of Materials Using Integrating Spheres
144. E948 Standard Test Method for Electrical Performance of Photovoltaic Cells Using Reference Cells Under Simulated Sunlight
145. F1869 Standard Test Method for Measuring Moisture Vapor Emission Rate of Concrete Subfloor Using Anhydrous Calcium Chloride
146. F2034 Standard Specification for Sheet Linoleum Floor Covering
147. F2170 Standard Test Method for Determining Relative Humidity in Concrete Floor Slabs Using in situ Probes

E. Bat Conservation International:
1. Bat Approved Bat Houses

F. Carpet and Rug Institute
1. Green Label Testing Programs
2. Green Label Plus Testing Programs

G. Center for Resource Solutions
1. Green-e program

H. EPA:
1. Comprehensive Procurement Guidelines
2. ENERGY STAR
3. Environmentally Preferable Purchasing Program Final Guidance
4. GreenScapes program
5. Heat Island Initiative
6. Indoor Air Quality Building Education and Assessment Model (I-BEAM)
7. National Environmental Performance Track
8. Pollution Prevention (P2)
9. Product Stewardship Program
10. Significant New Alternatives Policy (SNAP) Program

I. Federal Trade Commission:
1. Guide for the Use of Environmental Marketing Claims

J. Forest Stewardship Council:
1. Chain-Of-Custody
2. Forest Management

K. Green Building Initiative (GBI):
1. Green Globes - US

L. Green Seal:

1. GC-03 Anti-Corrosive Paints
2. GC-12 Occupancy Sensors
3. GC-13 Split-Ductless Air-Source Heat Pumps
4. GS-05 Compact Fluorescent Lamps
5. GS-11 Paints
6. GS-13 Windows
7. GS-14 Window Films
8. GS-31 Electric Chillers
9. GS-32 Photovoltaic Modules
10. GS-36 Commercial Adhesives
11. GS-37 Industrial & Institutional Cleaners

M. International Iron and Steel Institute:
1. CO2 Breakthrough Program

N. International Organization of Standardization:
1. Guide 64; Guide for Inclusion of Environmental Aspects in Product Standards
2. 9660 Information processing -- Volume and file structure of CD-ROM for information interchange
3. 14001 Environmental management systems – Specification with guidance for use
4. 14004 Environmental Management Systems – General Guidelines on Principles, Systems and Supporting Techniques
5. 14020 Environmental labels and declarations – General principles
6. 14024 Environmental labels and declarations – Type I environmental labelling - Principles and procedures
7. 14040 Environmental management – Life cycle assessment – Principles and framework

O. National Association of Home Builders:
1. Advanced Framing Techniques: Optimum Value Engineering

P. National Institute of Building Sciences:
1. MOIST program for transfer of heat and moisture
2. Whole Building Design Guide

Q. National Institute of Standards and Technology:
1. BEES (Building for Environmental and Economic Sustainability) Lifecycle Decision Support Tool

R. Sheet Metal and Air Conditioning Contractors' National Association:
1. IAQ Guidelines for Occupied Buildings Under Construction

S. Southcoast Air Quality Management District:
1. 1168 Adhesive and Sealant Applications

T. US Composting Council:

1. Seal of Testing Assurance Program

U. US Department of Agriculture:

1. Biobased Products – Definitions and Descriptions

V. US Green Building Council:

1. LEED™ 2009 Green Building Rating System

PART 2 - PRODUCTS (Not Used)

PART 3 - EXECUTION (Not Used)

END OF SECTION 01 4200

SECTION 01 4500 - ENVIRONMENTAL PROTECTION AND TRAFFIC CONTROL

PART 1 - GENERAL

1.1 SUMMARY

A. This section describes requirements related to certain federal, state and regional governmental agencies who have jurisdiction over portions of the Work or who have issued permits prior to the performance of the Work which is in the jurisdiction of such governmental agency. The specific referencing of such permits shall not limit or restrict the obligation of the Contractor to comply with the conditions of all permits affecting the Work, as set forth in the General Conditions.

B. This section describes Contractor requirements for traffic control and road signage related to closure of the visitor parking lot during construction.

C. Specific reference in the specifications to codes and regulations or requirements of regulatory agencies shall mean the latest printed edition of each adopted by the regulatory agency at the date of submission of bids unless the document referenced is shown dated.

D. The work site has sensitive natural resources, including water bodies, plant communities, and non-listed fauna that inhabit aquatic and terrestrial communities on site. Work activities shall be conducted in a manner to avoid impacts outside of work zones and to reduce impacts within a work zone unless required to accomplish the restoration design. When non-listed fauna are discovered within a work zone, the Contractor shall accommodate efforts and time needed by a BioMonitor to relocate the fauna outside the work zone before work continues.

E. The work is conducted on land owned and managed by the National Park Service, which protects natural and archeological resources.

1.2 ENVIRONMENTAL PERMITS

A. Compliance with Regulatory Permits: The Contractor shall completely review, be familiar with and adhere to the terms of all permits and agency approvals for this project. The NPS will be responsible for securing and providing to the Contractor copies of permits, certifications, or authorizations from the following agencies including, but not limited to: U.S. Army Corps of Engineers, the California Regional Water Quality Control Board Section 401, and the California Coastal Commission. Copies of all permits are available from the Contracting Officer and will remain at the project site throughout the duration of construction.

B. The Contractor shall comply with requirements of the Regional Water Quality Control Board Clean Water Act 401 Certification to prepare a Stormwater Pollution Prevention Plan to prevent turbidity, erosion, runoff, or other similar pollution of protected water bodies at the site during the construction period, as described in Section 01 5723.

C. The Contractor shall comply with the applicable measures of the following documents issued by Regulatory Agencies**.**

1. Coastal Development Permit - California Coastal Commission
2. Local Coastal Program (LCP) Certification and Amendments
3. San Francisco Bay Regional Water Quality Control Board, 401 Water Quality Certification

1.3 CONSTRUCTION PERMITS

A. Changes in Permit Conditions: Contractor acknowledges that the Scope of Work includes services not provided under specific Bid Items that are reasonably necessary to comply with the Environmental Permits. In the event that an additional Environmental Permit necessary for the performance of the Work is issued, or an existing Environmental Permit is modified, after the Bid Offer Submission date, the Contractor recognizes the terms, conditions and requirements of such Environmental Permit or modification may require the Contractor to perform services or to provide services or to provide materials which are different from the Scope of Work in the Contract Documents. In such event, the Contractor shall not be entitled to any adjustment in the Contract Sum or Contract Times unless such change in the Work materially differs from the Work in the Contract Documents and such change could not be reasonably expected by the Contractor given the ordinarily encountered and generally recognized implementation of similar Environmental Permits. Contractor shall be responsible for its cost of evaluation of the implications for the Work, of the terms, conditions and restrictions of the Environmental permits, and of responding to any Requests for Proposals or Field Changes of the Contracting Officer which are issued in connection with the issuance of the Environmental Permits.

B. The specification of specific permits applying to the Work shall not limit or restrict the obligation of the Contractor in the performance of the Work to comply with any and all other laws, regulations or permits which are specified in the Contract Documents or which apply to the performance of the Work.

1.4 REFERENCES TO REGULATORY REQUIREMENTS

A. Codes, laws, ordinances, rules and regulations referred to shall have full force and effect as though printed in full in these specifications. Codes, laws, ordinances, rules and regulations are not furnished to the Contractor, since the Contractor is assumed to be familiar with their requirements. The listing herein of applicable codes, laws, and regulations for hazardous waste abatement work is supplied to the Contractor as a courtesy and shall not limit the Contractor's responsibility for complying with all applicable laws, regulations or ordinances having application to the Work. Where conflict among the requirements exists, the most stringent requirements shall be used.

B. Conform to referenced codes, laws, ordinances, rules and regulations.

C. Precedence:

1. Where specified requirements differ from the requirements of applicable codes, ordinances and standards, the more stringent requirements shall take precedence.

2. Where the Plans or Specifications require or describe products or execution of better quality, higher standard or greater size than required by applicable codes, ordinances and

standards, the Plans and Specifications shall take precedence so long as such increase is legal.

3. Where no requirements are identified in the Plans or Specifications, comply with all requirements of applicable codes, ordinances and standards of governing authorities having jurisdiction.

1.5 LAWS, ORDINANCES, RULES AND REGULATIONS

A. Federal Laws which apply to the Contract Documents include, but are not limited to, the following:

1. Federal Clean Water Act Section 404
2. Federal Rivers and Harbors Act Sections 9-10
3. Coastal Act of 1976 (Public Resources Code Sections 30000-30900)
4. Federal Endangered Species Act, Section 7 5.
5. Architectural Barriers Act

B. During prosecution of Work to be done under the Contract Documents, comply with applicable laws, ordinances, rules and regulations, including, but not limit to Federal, State of California, and Regional and Local Agencies.

C. Other Applicable Laws, Ordinance and Regulations:

1. Work shall be accomplished in conformance with all rules and regulations of public utilities and utility districts.
2. Where such laws, ordinances rules and regulations require more care or greater time to accomplish Work, or require better quality, higher standards or greater size of products, Work shall be accomplished in conformance to such requirements with no change to the Contract Time and Contract Sum, except where changes in laws, ordinances, rules and regulations occur subsequent to the execution date of the Agreement.

1.6 CONFLICTS

A. Conflicts between referenced regulatory requirements: Comply with the one establishing the more stringent requirement.

B. Between referenced regulatory requirements and the Contact Documents: Comply with the one establishing the more stringent requirement and in accordance with the General Conditions.

1.7 SUBMITTALS

A. Submit all regulatory items as required in the Construction Documents. All submittals shall be provided in both electronic format**, native format or PDF** and hard copy.

B. Spill Prevention and Control Plan

1. The plan shall be completed before any construction activities begin and shall include provisions for preventing, containing, and reporting spills of hazardous materials. If a spill is reportable, the contractor's superintendent shall notify the Marin County Department of Emergency Services and the California Department of Toxic Substances Control (DTSC).

2. The Plan must include:

   a. The name of the individual who will report any spills or hazardous substance releases and who will follow up with complete documentation. This individual shall immediately notify the Contracting Officer and the local Fire Department in addition to the legally required Federal, State, and local reporting channels (including the National Response Center 1-800-424-8802) if a reportable quantity is released to the environment. The plan shall contain a list of the required reporting channels and telephone numbers.

   b. The name and qualifications of the individual who will be responsible for implementing and supervising the containment and cleanup.

   c. Training requirements for Contractor's personnel and methods of accomplishing the training. The Contractor shall supply the CO with a training sign in sheet and training outline prior to beginning work.

   d. A list of materials and equipment to be immediately available at the job site, tailored to cleanup work of the potential hazard(s) identified.

   e. The names and locations of suppliers of containment materials and locations of additional fuel oil recovery, cleanup, restoration, and material-placement equipment available in case of an unforeseen spill emergency.

   f. The methods and procedures to be used for expeditious contaminant cleanup.

3. The Plan shall require that staging, storage, and refueling areas and any equipment repair or similar activity take place when equipment is at least 100-feet from any active creek channel, ditch, pond, or fenced sensitive area. A spill kit must be present at all times.

4. The Refueling shall only occur in areas approved by the Construction Manager or Environmental Monitor. Staging and storage areas shall occur only in designated areas: any staging or storage in wetlands or other sensitive habitats will require prior approval from the Construction Manager or Environmental Monitor.

5. Protective tarps shall be used during refueling or equipment repair. The Contractor shall inspect and fully clean up any such leaks or spills that occur on the site. Contractor shall not store any hazardous materials at quarry sites.

C. Air Quality Plan

1. Prepare and implement the plan that shall demonstrate that the heavy duty (>50 horsepower) off-road vehicles to be used in the project (including owned, leased, and subcontractor vehicles) will achieve a project-wide fleet average 20 percent NOx reduction and 45% particulate reduction compared to the most recent ARB (Air Resources Board) fleet average at time of construction.

2. Acceptable options for reducing emissions may include, but are not limited to:

   a. Use of late model engines

   b. Low emission diesel products

   c. Alternative fuels (e.g. aqueous diesel fuel

d. Engine retrofit technology (e.g. diesel particulate filters, diesel oxidation catalysts, lean-NOx catalysts), after-treatment products, and/or

e. Other options as they become available

3. Describe measures to be taken to control dust, odors, and prevent air pollution resulting from the performance of the work.

4. Describe in detail how dust and air emissions generated during the performance of the work will be minimized, controlled, and contained.

D. Traffic Control Plan

1. Within one **1** week after the CO issues a Notice to Proceed, the Contractor shall submit a Traffic Control Plan to the CO for review and approval. The plan shall be designed to reduce the effects of construction on residents and visitors in the project area throughout the construction period. In particular, the plan shall address the potential for parking constraints.

2. The following travel lane widths, speeds, and conditions will be maintained during project construction as much as possible:

a. For two-way traffic operations, the minimum width for the traveled way will be 20 feet, or a minimum of a 10-foot traffic lane in each direction.

b. For one-way operation, the minimum width for the traveled way will be 12 feet where some shoulder exists. In those areas where no shoulder is present, the minimum width for the traffic lanes will be 13 feet.

c. Any roadway or lane closures will be coordinated with the Agency(ies) having jurisdictionand minimized during the morning and evening peak traffic periods.

d. Traffic control devices will be installed as specified in the California Department of Transportation's Manual of Traffic Controls for Construction and Maintenance Works Zones (California Department of Transportation 1996). Flaggers will be used as necessary for directional traffic controls.

e. The maneuvers of construction vehicles will not block or restrict the movement of adjacent traffic flows within the construction zone.

f. Safe pedestrian and bicyclist access will be maintained around the construction areas on the perimeter access road at all times, even if the access road is temporarily used by the Contractor for work on the project. Construction areas will be secured to prevent pedestrians and bicyclists from entering the work site. Contractor shall work with the Contracting Officer as needed to determine alternate routes for bicyclists and pedestrians, if necessary, during trail closures. The Contractor shall provide notification to the Contracting Officer if a temporary closure of the access road or parking lot is needed.

g. As part of the traffic control plan, a detailed construction traffic management plan will be developed to reduce the impacts of construction and employee traffic during construction. The plan will address such issues as employee parking and truck and equipment circulation around the work site. Written notification will be provided to all contractor employees regarding appropriate routes to and from the construction site, and the weight and speed limits on local roads used to access the construction site; and appropriate parking locations.

h. The traffic control plan will clearly identify staging areas, dump sites, operating hours, including the hours during which trucks will be traveling State Routes, project duration, scheduling and phasing. It will also identify the total number of construction vehicles and their respective haul routes, with hauling to be allowed on state routes only during off-peak hours.

3. The Contractor shall coordinate with NPS and public affairs personnel to provide accurate and up-to-date information about specific actions that would affect local businesses, residents or park users. NPS and public affairs personnel will generally conduct notifications to such individuals; however, if a special circumstance or unforeseen incident occurs which requires immediate notification, the Contractor shall notify the Contracting Officer and immediately conduct such affected individuals or businesses. Signs will be posted at the construction site giving the name and telephone number or email address of the staff person designated by the Contracting Officer to receive complaints regarding construction traffic.

4. Access to adjacent development in or near the construction areas will be maintained at all times. Provisions for traffic control will be made to allow primacy for emergency vehicles. Work on or near the emergency access road will be conducted in a manner where any vehicle on the road will be manned at all times in order to allow access for an emergency vehicle, if necessary. Equipment shall not be parked in a manner to block emergency access. During non-construction times, all trenches and other construction features will be covered to allow safe access to adjacent development.

5. Response times for police, fire, and emergency services could be temporarily affected by the project, thereby increasing the potential for property losses or hazards to human health. Coordination with these agencies will be performed by the Contracting Officer. As part of the traffic control plan, provide sufficient information to the Contracting Officer about the construction activities that might affect response times by these services to allow notifications prior to onset of construction thereby reducing the potential for property losses and hazards to human health. Priority access will be given to emergency service vehicles on Pacific Way.

6. Roadway and parking lot damage, such as potholes, minor fractures, will be repaired, and the overall roadbed will be maintained within the construction areas, to the extent that such damage is caused by project traffic that occurs during the period of hauling operations. Following construction within a particular roadway or parking lot segment, roadway and/or parking lot restoration will take place within six weeks of completion of construction. Parking lot potholes will be refilled with gravel, and gravel will be placed on the surface to maintain a smooth driving surface. County Design Guidelines will be adhered to when reconstructing County roads. Agreements on restoration standards will be formalized with the relevant jurisdiction Marin County Public Works, and/or Caltrans or other agency(ies) with jurisdiction prior to the issuance of the Notice to Proceed.

7. Hauling shall not begin until the Plan has been reviewed and accepted by the Contracting Officer and the County, if required by the County. The Contractor shall allow ten (10) working days for this review process. If revisions are required as determined by the review process, the Contractor shall revise and resubmit the Plan within five (5) calendar days of receipt of the revision comments and shall allow five (5) working days for review of the revisions. Failure to submit an acceptable Plan shall not in any way delay the start of the contract working days.

8. The approved Plan must be accepted by the Contracting Officer prior to the start of hauling. Any lost days due to improper traffic control will be charged against the Contractor's

allowable calendar days. Acceptance of the submitted Plan shall in no way relieve the Contractor of his/her responsibility for any and all safety requirements conforming to the Standard Specifications, this section of the Specifications or others of any public authority having jurisdiction for the safety of persons and property, or to protect them from damage, injury or loss.

E. Solid Waste Disposal and Recycling Plan: Per Section 01 74 19 of these specifications.

F. Storm Water Pollution Prevention Plan: per section 01 57 23 of these specifications

1.8 ENVIRONMENTAL ASSESSMENT OF CONTRACT DEVIATIONS

A. Any deviations, requested by the Contractor, from the drawings, plans and specifications which may have an environmental impact will be subject to approval by the Contracting Officer and may require an extended review, processing, and approval time. The Contracting Officer reserves the right to disapprove alternate methods, even if they are more cost effective, if the Contracting Officer determines that the proposed alternate method will have an adverse environmental impact.

1.9 NOTIFICATION

A. The Contracting Officer will notify the Contractor in writing of any observed noncompliance with Federal, State or local environmental laws or regulations, permits, and other elements of the Contractor's Environmental Protection plan. The Contractor shall, after receipt of such notice, inform the Contracting Officer of the proposed corrective action and take such action when approved by the Contracting Officer. The Contracting Officer may issue an order stopping all or part of the work until satisfactory corrective action has been taken. No time extensions shall be granted or equitable adjustments allowed to the Contractor for any such suspensions. This is in addition to any other actions the Contracting Officer may take under the contract, or in accordance with the Federal Acquisition Regulation or Federal Law.

PART 2 - PRODUCTS (Not used)

PART 3 - EXECUTION

3.1 ENVIRONMENTAL PERMITS AND COMMITMENTS

1. The Contractor shall be responsible for complying with all existing environmental permits and commitments required by Federal, State, Regional, and local environmental laws and regulations.

3.2 LAND RESOURCES

A. The Contractor shall confine all activities to areas defined by the drawings and specifications. Prior to the beginning of any construction, the Contractor shall identify any land resources such as trees or vegetation to be preserved within the work area. Except in areas indicated on the drawings or specified to be cleared, the Contractor shall not remove, cut, deface, injure, or destroy

land resources including trees, shrubs, vines, grasses, topsoil, and land forms without approval. No ropes, cables, or guys shall be fastened to or attached to any trees for anchorage unless specifically authorized. The Contractor shall provide effective protection for land and vegetation resources at all times as defined in the following subparagraphs. Stone, soil, or other materials displaced into uncleared areas shall be removed by the Contractor, and land resources restored to their pre-construction condition, or better.

B. Work Area Limits: Prior to commencing construction activities, the Contractor shall mark the areas that need not be disturbed under this contract. Isolated areas within the general work area which are not to be disturbed shall be marked or fenced. Monuments and markers shall be protected before construction operations commence. Where construction operations are to be conducted during darkness, any markers shall be visible in the dark. The Contractor's personnel shall be knowledgeable of the purpose for marking and/or protecting particular objects.

C. Vegetation: Trees, shrubs, vines, grasses, land forms and other vegetation features indicated and defined on the drawings to be preserved shall be clearly identified by marking, fencing, or wrapping with boards, or any other approved techniques. The Contractor shall restore vegetation features damaged or destroyed during construction operations outside the limits of the work area. Refer Section 01 5639 TREE RETENTION AND PROTECTION

D. Erosion and Sediment Controls: The Contractor shall construct or install temporary and permanent erosion and sediment control best management practices (BMPs) as specified in Section 015723 TEMPORARY STORM WATER POLLUTION PREVENTION.

3.3 WATER RESOURCES

A. The Contractor shall monitor construction activities to prevent pollution of surface and ground waters. Toxic or hazardous chemicals shall not be applied to soil or vegetation unless otherwise indicated. All water areas affected by construction activities shall be monitored by the Contractor. No earthmoving equipment shall be operated in flowing water. For construction activities immediately adjacent to impaired surface waters, the Contractor shall be capable of quantifying sediment or pollutant loading to that surface water when required by State or Federally issued Clean Water Act permits

B. Cofferdams and Dewatering Operations

1. Construction operations for dewatering, removal of cofferdams, and excavation, shall be controlled at all times to maintain compliance with existing State water quality standards and designated uses of the surface water body, except as required in the drawings and specifications. The Contractor shall comply with the State of California water quality standards, the San Francisco Bay Region California Regional Water Quality Control Board, and the Clean Water Act Section 401 Water Quality Certification, and the NMFS Biological Opinion.

2. Work in the identified wetlands must be minimized to the extent possible.

3. The Contractor will be responsible for the design, construction, and operation of dewatering systems to maintain generally dry conditions in excavations, as necessary to complete the work as shown on the Drawings, including placement of fill materials to the design grades and specified levels of compaction. Placement of boulders, granular materials such as streambed fill, and wood in the streambed may be made with some water in the excavations, provided that the presence of water does not interfere with inspection

work, placement to the lines and grades indicated on the Drawings, compaction requirements for backfill, or control of sediments.

C. Wetlands

1. Work under this Contract shall require that the Contractor enter and regrade onsite wetlands. The Contractor shall not allow discharge of contaminants into wetlands to be graded under this Contract. Authorization to enter specific wetlands identified shall not relieve the Contractor from any obligation to protect other wetlands within, adjacent to, or in the vicinity of the construction site and associated boundaries. In these areas, the Contractor shall not enter, disturb, destroy, or allow discharge of contaminants into any wetlands.

2. Storage or staging areas for equipment, materials, chemicals, etc. shall be located as far away as is practical from creek, wetland, or protected areas.

3.4 AIR RESOURCES

A. Equipment operation: Activities, or processes performed by the Contractor shall be in accordance with all Federal and State air emission and performance laws and standards

B. Dust/Particulates: Dust particles aerosols, and gaseous by-products from construction activities and processing and preparation of materials (such as from asphaltic batch plants) shall be controlled at all times, including weekends, holidays and hours when work is not in progress. The Contractor shall maintain excavations, stockpiles, haul roads, permanent and temporary access roads, plant sites, spoil areas, borrow areas, and other work areas within or outside the project boundaries free from particulates which would cause the Federal, State, and local air pollution standards to be exceeded or which would cause a hazard or a nuisance. Sprinkling, chemical treatment of an approved type, baghouse, scrubbers, electrostatic precipitators or other methods will be permitted to control particulates in the work area. Sprinkling, to be efficient, must be repeated to keep the disturbed area damp at all times. The Contractor must have sufficient particulate control shall be performed as the work proceeds and whenever a particulate nuisance or hazard occurs. The Contractor shall implement the following control measures for construction emissions of PM10 per Bay Area Air Quality Management District (BAAQD), during construction:

1. Maintain a well-secured, wind-resistant cover over all stockpiles at all times, including both weekdays and weekends, except during the periods when equipment is actively adding to or extracting material from the stockpile.

2. Along the perimeter of the project site adjacent to Pacific Way, from the entrance to the existing Parking Lot to the location of the entrance to the new Parking Lot, install an 8foot-high construction fence with barrier fabric that will deter movement of dust.

3. Water all active construction areas as often as necessary to prevent dust.

4. Cover all trucks hauling soil, sand, and other loose materials

5. Sweep daily (with water sweepers) all paved access roads, parking areas and staging areas at construction sites

6. Sweep streets daily (with water sweepers) if visible soil material is carried onto adjacent public streets

7. Limit traffic speeds on unpaved roads to 15 mph

8. Install sandbags or other erosion control measures to prevent silt runoff to public roadways

C. Odors: Odors from construction activities shall be controlled at all times. The odors shall not cause a health hazard and shall be in compliance with State regulations and/or local ordinances.

D. Burning: Burning will not be allowed

3.5 PROTECTION OF WILDLIFE RESOURCES AND SPECIES OF SPECIAL CONCERN

A. The Contractor shall at all times perform all work and take such steps required to prevent interference or disturbance to wildlife.

B. Wildlife: The Contractor shall also take measures to comply with the migratory Bird Treaty Act. Migratory birds, eggs, and active nests shall be avoided by removing potential nesting vegetation inside the construction area boundaries prior to or after the March 1 to July 31 migratory land bird nesting season and January 1 through July 31 for raptors. The Contracting Officer may approve some vegetation removal (trees, shrubs or grasses) prior to July 31, if NPS policies for bird nesting surveys are met.

3.6 CONTAMINATED SOIL/WATER

A. Prior to onset of construction, all construction workers shall be trained in the identification of potentially contaminated soil and/or water, including information on characteristics of potential contamination such as discolored soil, oils or sheens on water, and unusual odors. In the event that hazardous materials are encountered during construction, all construction activities in the area of the discovery will stop, and notify the Contracting Officer. Conduct hazardous materials investigations to identify the nature and extent of contamination and evaluate potential impacts on project construction. If necessary, implement remediation measures consistent with all applicable local, state, and federal codes and regulations.

B. Construction will not resume until remediation is complete. If waste disposal is necessary, NPS shall ensure that all hazardous materials removed during construction are handled and disposed of by a licensed waste-disposal contractor and transported by a licensed hauler to an appropriately licensed and permitted disposal or recycling facility, in accordance with local, state and federal requirements.

3.7 PREVIOUSLY USED EQUIPMENT

A. The Contractor shall clean all previously used construction equipment prior to bringing it onto the project site. The Contractor shall ensure that the equipment is free from soil residuals, egg deposits from plant pests, noxious weeds, and plant seeds. The Contractor shall consult with the USDA jurisdictional office for additional cleaning requirements

3.8 MAINTENANCE OF POLLUTION FACILITIES

A. The Contractor shall maintain permanent and temporary pollution control facilities and devices for the duration of the contract or for that length of time construction activities create the particular pollutant

3.9 TRAINING OF CONTRACT PERSONNEL

A. The Contractor's personnel shall be trained in all phases of environmental protection and pollution control. The Contractor shall conduct environmental protection/pollution control meetings for all Contractor personnel prior to commencing construction activities. Additional meetings shall be conducted for new personnel and when site conditions change. The training and meeting agenda shall include: methods of detecting and avoiding pollution; familiarization with statutory and contractual pollution standards; installation and care of devices, vegetative covers, and instruments required for monitoring purposes to ensure adequate and continuous environmental protection/pollution control; anticipated hazardous or toxic chemicals or wastes, and other regulated contaminants; recognition and protection of archaeological / historical / cultural sites, artifacts, wetlands, and endangered species and their habitat that are known to be in the area

END OF SECTION 01 4500

SECTION 01 5000 - TEMPORARY FACILITIES AND CONTROLS

PART 1 - GENERAL

1.1 SUMMARY

A. This Section includes requirements for temporary utilities, support facilities, and security and protection facilities.

1.2 DEFINITIONS

A. Permanent Enclosure: As determined by Contracting Officer, permanent or temporary roofing is complete, insulated, and weathertight; exterior walls are insulated and weathertight; and all openings are closed with permanent construction or substantial temporary closures.

1.3 USE CHARGES

A. General: Cost or use charges for temporary facilities shall be included in the Contract Sum as required.

B. Water Service: Water from existing water system is available for use with metering and with payment of use charges. Provide connections and extensions of services as required for construction operations without any additional permit costs.

C. Electric Power Service: Electric power from existing system is available for use with metering and with payment of use charges. Provide connections and extensions of services as required for construction operations without any additional permit costs.

1.4 QUALITY ASSURANCE

A. Electric Service: Comply with NECA, NEMA, and UL standards and regulations for temporary electric service. Install service to comply with NFPA 70.

B. Environmental Protection: Provide environmental protection as required by agency(ies) with jurisdiction and as indicated in the Contract Documents. Coordinate with requirements of the following:

1. Regulatory Requirements.
2. Indoor Air Quality (IAQ) Management.
3. Noise & Acoustics Management.
4. Environmental Management.
5. Construction Waste Management.

1.5 PROJECT CONDITIONS

A. Temporary Use of Permanent Facilities: Installer of each permanent service shall assume responsibility for operation, maintenance, and protection of each permanent service during its use as a construction facility before NPS acceptance, regardless of previously assigned responsibilities.

PART 2 - PRODUCTS

2.1 GENERAL

A. Material may be new or used, but shall be suitable for intended purpose. Fences and barriers shall be structurally adequate and neat in appearance.

2.2 MATERIALS

A. Temporary materials may be new or used, but must be adequate in capacity for the required usage, must not create unsafe conditions, and must not violate requirements of applicable codes and standards.

B. Pavement: Comply with Division 32 pavement sections.

C. Portable Chain-Link Fencing: Minimum 2-inch (50-mm), 9-gage, galvanized steel, chain-link fabric fencing; minimum 6 feet (1.8 m) high with galvanized steel pipe posts; minimum 2-3/8-inch- (60-mm-) OD line posts and 2-7/8-inch- (73-mm-) OD corner and pull posts, with 1-5/8-inch- (42-mm-) OD top and bottom rails. Provide galvanized steel bases for supporting posts.

D. Safety Barrier Fence: Orange plastic fence, minimum height, 4 feet.

E. Barrier Tape: Safety yellow polyolefin film imprinted with "CAUTION: CONSTRUCTION AREA" in permanent black ink, 4 mil (.1-millimeter) minimum thickness, minimum 3" high.

F. Wood Enclosure Fence: Plywood, 8 feet (2.4 m) high, framed with four 2-by-4-inch (50-by-100-mm) rails, with preservative-treated wood posts spaced not more than 8 feet (2.4 m) apart.

G. Silt fence shall consist of 2-foot tall silt fence fabric stapled to 4-foot wood stakes driven into the ground to a depth of 1.5-feet. Wood stakes shall be space at 5- to 6-foot intervals. Depending on use, the base of the silt fence may be connected to the ground through standard keying or stapled to the ground using 12-inch long erosion control blanket staples on 3- to 4-foot centers.

   1. Silt fence shall be both installed and removed in a manner to avoid generating fine material that will easily erode following construction activities.
   2. Silt fence may need to be supplemented by other materials such as straw bales or wattles in specific zones of the site to prevent the release of fine sediment into open water either during construction activities or in the event that rain is predicted or occurs during the period of implementation.

H. Security Fence: Chain link, with fabric dense enough to reduce dust movement, minimum height, 6 feet.

I. Gypsum Board: Minimum 1/2 inch (12.7 mm) thick by 48 inches (1219 mm) wide by maximum available lengths; regular-type panels with tapered edges. Comply with ASTM C 36/C 36M.

J. Insulation: Unfaced mineral-fiber blanket, manufactured from glass, slag wool, or rock wool; with maximum flame-spread and smoke-developed indexes of 25 and 50, respectively.

K. Polyethylene Sheet: Reinforced, fire-resistive sheet, 10-mil (0.25-mm) minimum thickness, with flame-spread rating of 15 or less per ASTM E 84 and passing NFPA 701 Test Method 2.

L. Dust-Control Adhesive-Surface Walk-off Mats: Provide mats minimum 36 by 60 inches (914 by 1624 mm).

2.3 TEMPORARY FACILITIES

A. Field Offices, General: On-site offices are not permitted. Not permitted for Construction Contractor.

B. Storage and Fabrication Sheds: Temporary weather tight sheds or other covered facilities for storage of materials subject to weather damage. Number and size of structures shall be subject to Contracting Officer's approval.

C. Toilets: Sufficiently lighted and ventilated toilet facilities in weatherproof, sight proof, handicap accessible, sturdy enclosures with privacy locks.

1. Provide separate toilet facilities for men and women.

2.4 EQUIPMENT

A. Fire Extinguishers: Portable, UL rated; with class and extinguishing agent as required by locations and classes of fire exposures.

B. HVAC Equipment: Unless Contracting Officer authorizes use of permanent HVAC system, provide vented, self-contained, liquid-propane-gas or fuel-oil heaters with individual space thermostatic control.

1. Use of gasoline-burning space heaters, open-flame heaters, or salamander-type heating units is prohibited.
2. Heating Units: Listed and labeled for type of fuel being consumed, by a testing agency acceptable to agency(ies) with jurisdiction, and marked for intended use.

PART 3 - EXECUTION

3.1 INSTALLATION, GENERAL

A. Locate facilities where they will serve Project adequately and result in minimum interference with performance of the Work. Relocate and modify facilities as required by progress of the Work.

1. Locate facilities to limit site disturbance and as directed by the Contracting Officer.

B. Provide each facility ready for use when needed to avoid delay. Do not remove until facilities are no longer needed or are replaced by authorized use of completed permanent facilities.

3.2 TEMPORARY UTILITY INSTALLATION

A. General: Install temporary service or connect to existing service.

1. Arrange with utility company, NPS, and existing users for time when service can be interrupted, if necessary, to make connections for temporary services. Acquire all necessary permits.

B. Storm Sewers and Drainage: Provide temporary utilities to remove effluent lawfully.

1. Connect temporary sewers to private system indicated as directed by the agency(ies) with jurisdiction.

C. Potable water is available on site. Make connections to existing facilities as needed. Facilities must be cleaned and maintained in a condition acceptable to the NPS. At Substantial Completion, restore these facilities to condition existing before initial use.

D. Sanitary Facilities:

1. Toilets: : Place in approved locations secluded from public observation and convenient to work areas. Relocate as work progress requires. Sanitary facilities shall be placed at least 50 feet from water bodies and water drainages.

E. Heating and Cooling: Provide temporary heating and cooling required by construction activities for curing or drying of completed installations or for protecting installed construction from adverse effects of low temperatures or high humidity. Select equipment that will not have a harmful effect on completed installations or elements being installed.

1. Use of permanent heating and cooling system will not be allowed without written authorization from Contracting Officer. When the permanent heating and cooling system is approved for use as temporary heating and cooling, pay all costs until final acceptance. Permanent heating and cooling system must be sufficiently complete, including controls, to permit safe operation
2. Provide and maintain adequate approved facilities, as required for safety and construction requirements, during the progress of the work. Provide ample clearance around stoves and heaters and all chimney and vent connections to prevent ignition of combustible material

3. Install and maintain temporary filters when air handing equipment is used for temporary heating and cooling. Install new filters before final acceptance in addition to any extra sets of filters required. Clean coils as determined by Contracting Officer.
4. Warranties for equipment used for temporary heating and cooling shall start on date of Final Acceptance.

F. Ventilation and Humidity Control: Provide temporary ventilation required by construction activities for curing or drying of completed installations or for protecting installed construction from adverse effects of high humidity. Select equipment that will not have a harmful effect on completed installations or elements being installed. Coordinate ventilation requirements to produce ambient condition required and minimize energy consumption.

G. Electric Power Service: Use of existing electric power service will be permitted, as long as equipment is maintained in a condition acceptable to the NPS.

1. When temporary connections are removed, restore existing utility services to their original condition.

H. Lighting: Provide temporary lighting with local switching that provides adequate illumination for construction operations, observations, inspections, and traffic conditions.

1. Install and operate temporary lighting that fulfills security and protection requirements without operating entire system..

I. Telephone Service: No telephone service is available on site for Contractor's use. Make arrangements with Telephone Company and pay all costs.

3.3 SUPPORT FACILITIES INSTALLATION

A. General: Comply with the following:

1. Provide incombustible construction for offices, shops, and sheds located within construction area or within 50 feet of building lines. Comply with NFPA 241.
2. Maintain support facilities until near Substantial Completion. Remove structures, equipment, and furnishings, and terminate services after punch list is 100 percent completed or when directed by Contracting Officer. Personnel remaining after Substantial Completion will be permitted to use permanent facilities, under conditions acceptable to Contracting Officer.

B. Temporary Roads and Paved Areas: Construct and maintain temporary roads and paved areas adequate for construction operations. Locate temporary roads and paved areas in same location as permanent roads and paved areas. Extend temporary roads and paved areas, within construction limits indicated, as necessary for construction operations.

1. Coordinate elevations of temporary roads and paved areas with permanent roads and paved areas.
2. Prepare subgrade and install subbase and base for temporary roads and paved areas according to Division 31 Section "Earth Moving."

3. Recondition base after temporary use, including removing contaminated material, regrading, proofrolling, compacting, and testing.

C. Traffic Controls: Erect and maintain barricades, lights, danger signals, and warning signs in accordance with Manual on Uniform Traffic Control Devices (MUTCD), Part IV, latest edition.

1. Protect existing site improvements to remain including curbs, pavement, and utilities.
2. Maintain access for fire-fighting equipment and access to fire hydrants.
3. Illuminate barricades and obstructions at night; keep safety lights burning from sunset to sunrise.
4. Adequately barricade and post open cuts in or adjacent to thoroughfares.
5. Protect pedestrian traffic by guardrails or fences.
6. When pedestrian traffic is detoured onto a roadway, provide temporary walkways with protection as required at ends and overhead. For walkways, use lumber running parallel to direction of traffic movement and provide ramps at changes of elevation.
7. Cover pipes, hoses, and power lines crossing sidewalks and walkways with troughs using beveled edge boards.
8. Install Barrier Tape where directed by Contracting Officer. Keep a minimum of two rolls on site at all times

D. Parking: Use designated areas of existing parking areas for construction personnel.

E. Dewatering Facilities and Drains: Comply with requirements of the agency(ies) with jurisdiction. Maintain Project site, excavations, and construction free of water.

1. Dispose of rainwater in a lawful manner that will not result in flooding Project or adjoining properties nor endanger permanent Work or temporary facilities.

F. Project Identification and Temporary Signs: Provide Project identification and other signs. Fence, barricade, or otherwise block off the immediate work area to prevent unauthorized entry.

1. Provide temporary, directional signs for construction personnel and visitors.
2. Maintain and touchup signs so they are legible at all times.
3. Erect and maintain sufficient detour signs at road closures and along detour routes.

G. Waste Disposal Facilities: Provide waste-collection containers in sizes adequate to handle waste from construction operations. Comply with requirements of agency(ies) with jurisdiction.

H. Lifts and Hoists: Provide facilities necessary for hoisting materials and personnel.

1. Truck cranes and similar devices used for hoisting materials are considered "tools and equipment" and not temporary facilities.

I. Temporary Use of Permanent Stairs: Cover finished, permanent stairs with protective covering of plywood or similar material so finishes will be undamaged at time of acceptance.

3.4 SECURITY AND PROTECTION FACILITIES INSTALLATION

A. Environmental Protection: Provide protection, operate temporary facilities, and conduct construction in ways and by methods that comply with environmental regulations and that minimize possible air, waterway, and subsoil contamination or pollution or other undesirable effects.

B. Cleaning of Equipment: The Contractor shall ensure that prior to moving on to the Project Area, all equipment, is free of soil, seeds, vegetative matter, or other debris that could contain or hold seeds. Ensure that all equipment has been pressure washed and is free of exotic species prior to start-up of operations and moving of equipment to Project Area. Equipment shall be considered free of soil, seeds, and other debris when a visual inspection does not disclose such material. Disassembly of equipment components or specialized inspection tools are not required.

C. Temporary Erosion and Sedimentation Control: Refer to Section 01 5723 "Temporary Storm Water Pollution Prevention".

D. Plant Protection: Refer to Section 01 1100 Summary of Work.

E. Pest Control: Follow NPS requirements and practices to minimize attraction and harboring of rodents, roaches, and other pests and to perform extermination and control procedures at regular intervals so Project will be free of pests and their residues at Substantial Completion. Perform control operations lawfully, using environmentally safe materials.

F. Site Enclosure Fence: Before demolition and construction operations begin, furnish and install chain link fencing in a manner that will prevent people and animals from easily entering site except by entrance gates.

   1. Extent of Fence: As required to enclose entire Project site or portion determined sufficient to accommodate construction operations.
   2. Locate pedestrian entrance gates as required to provide controlled personnel entry.

G. Security Enclosure and Lockup: Install substantial temporary enclosure around partially completed areas of construction. Provide lockable entrances to prevent unauthorized entrance, vandalism, theft, and similar violations of security. Provide Contracting Officer with one set of keys.

H. Barricades, Warning Signs, and Lights: Comply with requirements of MUTCD, part IV, 2003 edition for erecting structurally adequate barricades, including warning signs and lighting.

I. Temporary Enclosures: Provide temporary enclosures for protection of construction, in progress and completed, from exposure, foul weather, other construction operations, and similar activities. Provide temporary weathertight enclosure for building exterior.

   1. Where heating or cooling is needed and permanent enclosure is not complete, insulate temporary enclosures.

J. Temporary Fire Protection: Install and maintain temporary fire-protection facilities of types needed to protect against reasonably predictable and controllable fire losses. Comply with NFPA 241.

1. Responsible Person: A capable and qualified person shall be placed in charge of fire protection. The responsibilities shall include locating and maintaining fire protective equipment and establishing and maintaining safe torch cutting and welding procedures.
2. Smoking: Smoking within buildings or temporary storage sheds is prohibited.
3. Supervise welding operations, combustion-type temporary heating units, and similar sources of fire ignition according to requirements of NPS. A Hot Work permit is required for all torch and welding operations. See Section 01 1000, Summary of Work.
4. Develop and supervise an overall fire-prevention and -protection program for personnel at Project site. Review needs with local fire department and establish procedures to be followed. Instruct personnel in methods and procedures. Post warnings and information.
5. Provide temporary standpipes and hoses for fire protection. Hang hoses with a warning sign stating that hoses are for fire-protection purposes only and are not to be removed. Match hose size with outlet size and equip with suitable nozzles.
6. Hazard Control: Take all necessary precautions to prevent fire during construction. Provide adequate ventilation during use of volatile or noxious substances.
7. Spark Arresters: Equip all gasoline or diesel powered equipment used during periods of potential fire hazards or in potential forest and grass fire locations with spark arresters approved by the USDA Forest Service.

    a. Written determinations of periods and areas of potential fire hazard will be issued by Contracting Officer.

8. Buildings: Furnish a minimum of one extinguisher for each 1,500 square feet of area or major fraction thereof.

    a. Provide fire extinguisher at each level.

9. Vehicles and Equipment: Provide one extinguisher on each vehicle or piece of equipment.
10. Service and Refueling Areas: Locate areas a minimum of 50 feet from buildings and in conformance with the requirements of Section 01 5723. Shut down equipment before refueling.

3.5 OPERATION, TERMINATION, AND REMOVAL

A. Supervision: Enforce strict discipline in use of temporary facilities. To minimize waste and abuse, limit availability of temporary facilities to essential and intended uses.

B. Maintenance: Maintain facilities in good operating condition until removal.

1. Maintain operation of temporary enclosures, heating, cooling, humidity control, ventilation, and similar facilities on a 24-hour basis where required to achieve indicated results and to avoid possibility of damage.

C. Temporary Facility Changeover: Do not change over from using temporary security and protection facilities to permanent facilities until Substantial Completion.

D. Termination and Removal: Remove each temporary facility when need for its service has ended, when it has been replaced by authorized use of a permanent facility, or no later than Substantial Completion. Complete or, if necessary, restore permanent construction that may have been delayed because of interference with temporary facility. Repair damaged Work, clean exposed surfaces, and replace construction that cannot be satisfactorily repaired.

1. Materials and facilities that constitute temporary facilities are property of Contractor. NPS reserves right to take possession of Project identification signs.
2. At Substantial Completion, clean and renovate permanent facilities used during construction period.

E. Contractor to remove all fuels, lubricants, hydraulic fluids, hazardous material, porta-potties, mechanized equipment, vehicles and other equipment and materials as directed by NPS from the site at least 12 hours in advance of predicted storm and flood events if these events are predicted to create conditions where the environment will be contaminated, or the contractor's property is likely to cause damage or be damaged.

1. Equipment fueling, lubrication, and hydraulic fluid re-filling should take place at least 100 feet inland from the mean high tide line.

2. All equipment used on site should be free from leaks (fuel, lubricant, hydraulic, etc.).

3. Erosion and siltation controls should be placed whenever ground disturbance is present and should be maintained until the integrity of the surface is restored or revegetated

END OF SECTION 01 5000

SECTION 01 5002 - TRUCKING

PART 1 - - GENERAL

1.1 SUMMARY

A. This section describes requirements related to hauling of materials to and from the project.

1.2 SUBMITTALS

A. A detailed construction traffic management plan will be developed. See Specification Section 01 4500 Environmental Protection and Traffic Control.

PART 2 - PRODUCTS (Not used)

PART 3 - EXECUTION

3.1 GENERAL

A. All trucks hauling soil, sand, and other loose materials will be covered.

B. Equipment and trucks used for construction will utilize noise control techniques, including original mufflers, intake silencers, ducts, engine enclosures and acoustically attenuating shields or shrouds

C. Use vehicles with tight, clean, and smooth metal beds for hauling asphalt concrete mixes. Thinly coat the beds with an approved material to prevent the mix from adhering to the beds. Do not use petroleum derivatives or other coating material that contaminates or alters the characteristics of the mix. Drain the bed before loading.

D. Equip each truck with a canvas cover or other suitable material of sufficient size to protect the mix from the weather. When necessary to maintain temperature, use insulated truck beds and securely fastened covers. Provide access ports or holes for checking temperature of asphalt mix in the truck.

E. Roadway and parking lot damage, such as potholes, minor fractures, will be repaired, and the overall roadbed will be maintained within the construction areas, to the extent that such damage is caused by project traffic that occurs during the period of hauling operations. Following construction within a particular roadway or parking lot segment, roadway and/or parking lot restoration will take place within six weeks of completion of construction. County Design Guidelines will be adhered to when reconstructing County roads. Agreements on restoration standards will be formalized with Marin County Public Works, and/or Caltrans or other agency(ies) with jurisdiction prior to the issuance of the Notice to Proceed.

F. Hauling shall not begin until the Traffic Control Plan has been reviewed and accepted by the Contracting Officer**.** The Contractor shall allow ten (10) working days for this review process. If revisions are required as determined by the review process, the Contractor shall revise and resubmit the Traffic Control Plan within five (5) calendar days of receipt of the revision comments and shall allow five (5) working days for review of the revisions. Failure to submit an acceptable Plan shall not in any way delay the start of the contract working days.

G. The construction contractor will employ noise-reducing construction practices, including, but not limited to: Selecting haul routes that affect the fewest number of people.

H. Haul full loads, and minimize unnecessary vehicle trips.

I. Hauling contaminated soil/water: See Sections 01 3530 Hazardous Materials, 02 8214 Asbestos Abatement and 02 8313 Lead Paint Abatement.

J. Invasive Plants

1. All vehicles, tools and equipment shall be cleaned of dirt and vegetative material prior to entering the work site each day and at the end of each work day.
2. Any trucks or equipment driving from one work zone to another that requires passing through any areas with weeds shall take measures to prevent the spread of weed seeds via truck tires or tracks.

K. Noise

1. Prohibiting vehicles and other gas- or diesel-powered equipment from unnecessary warming up, idling, and engine revving
2. Selecting haul routes that affect the fewest number of people
3. See Section 01 5719 Noise and Exterior Lighting.

L. Staging and Queuing: of trucks on Park property and outside of the project work limits must comply with timing requirements of Sections 01 1100 Summary of Work, and 01 5719 Noise and Exterior Lighting.

END OF SECTION 01 5002

SECTION 01 5719.11 – INDOOR AIR QUALITY MANAGEMENT

PART 1 - GENERAL

1.1 SUMMARY

A. Section includes:

1. Special requirements for Indoor Air Quality (IAQ) management during construction operations.

a. Control of emissions during construction.
b. Moisture control during construction.

2. Procedures for testing baseline IAQ. Baseline IAQ requirements specify maximum indoor pollutant concentrations for acceptance of the facility.

1.2 DEFINITIONS

A. Definitions pertaining to sustainable development: As defined in ASTM E2114.

B. Adequate ventilation: Ventilation, including air circulation and air changes, required to cure materials, dissipate humidity, and prevent accumulation of particulates, dust, fumes, vapors, or gases.

C. Hazardous Materials: Any material that is regulated as a hazardous material in accordance with 49 CFR 173, requires a Material Safety Data Sheet (MSDS) in accordance with 29 CFR 1910.1200, or which during end use, treatment, handling, storage, transportation or disposal meets or has components which meet or have the potential to meet the definition of a Hazardous Waste in accordance with 40 CFR 261. Throughout this specification, hazardous material includes hazardous chemicals.

1. Hazardous materials include: pesticides, biocides, and carcinogens as listed by recognized authorities, such as the Environmental Protection Agency (EPA) and the International Agency for Research on Cancer (IARC).

D. Indoor Air Quality (IAQ): The composition and characteristics of the air in an enclosed space that affect the occupants of that space. The indoor air quality of a space refers to the relative quality of air in a building with respect to contaminants and hazards and is determined by the level of indoor air pollution and other characteristics of the air, including those that impact thermal comfort such as air temperature, relative humidity and air speed.

E. Interior final finishes: Materials and products that will be exposed to interior occupied spaces; including flooring, wall covering, finish carpentry, and ceilings.

F. Packaged dry products: Materials and products that are installed in dry form and are delivered to the site in manufacturer's packaging; including carpets, resilient flooring, ceiling tiles, and insulation.

G. Wet products: Materials and products installed in wet form, including paints, sealants, adhesives, special coatings, and other materials which require curing.

1.3 QUALITY ASSURANCE

A. Inspection and Testing Lab Qualifications: Minimum of 5 years experience in performing the types of testing specified herein.

1.4 SUBMITTALS

A. Indoor Air Quality (IAQ) Management Plan: After award and before the Pre-construction conference, prepare and submit an IAQ Management Plan including, but not limited to, the following:

1. Procedures for control of emissions during construction.

    a. Identify schedule for application of interior finishes: Identify each interior finish that either generates odors, moisture, or vapors or is susceptible to adsorption of odors and vapors, and indicate air handling zone, sequence of application, and curing times.
    b. Identify potential sources of odor and dust.
    c. Identify construction activities likely to produce odor or dust.
    d. Identify areas of project potentially affected, especially occupied areas.
    e. Evaluate potential problems by severity and describe methods of control.
    f. Describe construction ventilation to be provided, including type and duration of ventilation, use of permanent HVAC systems, types of filters and schedule for replacement of filters.
    g. Describe cleaning and dust control procedures.
    h. Describe coordination with commissioning procedures.

2. Procedures for moisture control during construction.

    a. Identify porous materials and absorptive materials.
    b. Identify schedule for inspection of stored and installed porous and absorptive materials.

3. Revise and resubmit Plan as required by Contracting Officer.

    a. Approval of Contractor's Plan will not relieve the Contractor of responsibility for compliance with applicable environmental regulations.

B. Product Data:

1. Submit product data for filtration media used during construction and during operation. Include Minimum Efficiency Reporting Value (MERV).

2. Material Safety Data Sheets: Submit MSDSs for inclusion in Operation and Maintenance Manual for the following products.

   a. Adhesives.
   b. Floor and wall patching/leveling materials.
   c. Caulking and sealants.
   d. Insulating materials.
   e. Fireproofing and firestopping.
   f. Paint.
   g. Clear finish for wood surfaces.
   h. Lubricants.
   i. Cleaning products.

C. Inspection and Test Reports:

   1. Moisture control inspections.
   2. Moisture content testing.
   3. Moisture penetration testing.
   4. Microbial Growth testing.

PART 2 - PRODUCTS (Not Used)

PART 3 - EXECUTION

3.1 IAQ MANAGEMENT - EMISSIONS CONTROL

A. HVAC Protection:

   1. Seal return registers during construction operations.
   2. Provide temporary exhaust during construction operations
   3. To the greatest extent possible, isolate and/or shut down the return side of the HVAC system during construction. When ventilation system must be operational during construction activities, provide temporary filters at all air inlets (returns) and at all locations for filters prescribed in the design.
   4. Contractor shall bear the cost of cleaning required due to failure to protect ducts and equipment from construction dust.

B. Source Control: Provide low and zero VOC materials as specified.

C. Pathway Interruption: Isolate areas of work as necessary to prevent contamination of clean or occupied spaces. Provide pressure differentials and/or physical barriers to protect clean or occupied spaces.

D. Housekeeping: During construction, maintain project and building products and systems to prevent contamination of building spaces.

E. Temporary Ventilation: For materials/products that generally require ventilation for off gassing, provide an ACH (air changes per hour) of 1.5 or more and as follows:

1. Provide minimum 48 hour pre-ventilation of packaged dry products prior to installation. Remove from packaging and ventilate in a secure, dry, well-ventilated space free from strong contaminant sources and residues. Provide a temperature range of 60 degrees F minimum to 90 degree F maximum continuously during the ventilation period. Do not ventilate within limits of Work unless otherwise approved by Contracting Officer.
2. Provide adequate ventilation during and after installation of interior wet products and interior final finishes.
3. Provide filtration media with a Minimum Efficiency Reporting Value (MERV) of 8 as determined by ASHRAE 52.2 during construction. Coordinate with work of Division 23 (15), Heating Ventilating and Air Conditioning (HVAC).

F. Scheduling: Schedule construction operations involving wet products prior to packaged dry products to the greatest extent possible.

G. Flush-Out: After construction ends, prior to occupancy and with all interior finishes installed, perform a building flush-out by supplying a total air volume of 14,000 cu.ft. of outdoor air per sq.ft. of floor area while maintaining an internal temperature of at least 60 degrees F and relative humidity no higher than 60%.

1. Obtain Contracting Officers concurrence that construction is complete enough before beginning flush-out.
2. If additional construction involving materials that produce particulates or any of the specified contaminants is conducted during or after flush-out then the flush-out process must be restarted.
3. Install new HVAC filtration media in all locations identified to have permanent filtration in the contract documents after completion of flush-out and before occupancy or further testing.

3.2 IAQ MANAGEMENT - MOISTURE CONTROL

A. Housekeeping:

1. Keep materials dry. Protect stored on-site and installed absorptive materials from moisture damage.
2. Verify that installed materials and products are dry prior to sealing and weatherproofing the building envelope.
3. Store interior absorptive materials only after building envelope is sealed and weatherproofed.

B. Inspections: Document and report results of inspections; state whether or not inspections indicate satisfactory conditions.

1. Examine materials for dampness as they arrive. If acceptable to Contracting Officer, dry damp materials completely prior to installation; otherwise, reject materials that arrive damp.
2. Examine materials for mold as they arrive and reject materials that arrive contaminated with mold.
3. Inspect stored and installed absorptive materials regularly for dampness and mold growth. Inspect after each rain event.

    a. Where stored on-site or installed absorptive materials become wet, notify Contracting Officer. Inspect for damage. If acceptable to the Contracting Officer, dry completely prior to closing in assemblies; otherwise, remove (in accordance with the Waste Management Plan) and replace with new materials.
4. Site drainage: Verify that final grades of site work and landscaping drain surface water and ground water away from the building.
5. Weather-proofing: Inspect moisture control materials as they are being installed. Include the following:

    a. Air barrier: Verify air barrier is installed without punctures and/or other damage. Verify air barrier is sealed completely.
    b. Flashing: Verify correct shingling of the flashing for roof, walls, windows, doors, and other penetrations.
    c. Vapor Barrier: Verify that vapor barrier is installed in accordance with the Contract documents.
    d. Insulation layer: Verify insulation is installed without voids.
    e. Roofing: In accordance with ASTM D7186 Standard Practice for Quality Assurance Observation of Roof Construction and Repair

6. Plumbing: Verify satisfactory pressure test of pipes and drains is performed before closing in and insulating lines.
7. HVAC: Inspect HVAC to verify:

    a. condensate pans are sloped and plumbed correctly;
    b. access panels are installed to allow for inspection and cleaning of coils and ductwork downstream of coils;
    c. ductwork and return plenums are air sealed;
    d. duct insulation is installed and sealed; and
    e. chilled water line and refrigerant line insulation are installed and sealed.

C. Schedule:

1. Schedule work such that absorptive materials, including but not limited to porous insulations, paper-faced gypsum board, ceiling tile, and finish flooring, are not installed until they can be protected from rain and construction-related water.
2. Weather-proof as quickly as possible. Schedule installation of moisture-control materials, including but not limited to air barriers, flashing, exterior sealants and roofing, at the earliest possible time. Moisture s

D. Testing for Moisture Content: Test moisture content of porous materials and absorptive materials to ensure that they are dry before sealing them into an assembly. Document and report results of

testing. Where tests are not satisfactory, dry materials and retest. If satisfactory results cannot be obtained with retest, remove and replace with new materials.

1. Concrete: Moisture test as per one or more of the following; unless otherwise indicated, acceptable upper limits for concrete are 4% top inch; 85% headspace RH; 3 lbs/1000ft2/day:

    a. ASTM D4263 Test Method for Indicating Moisture in Concrete by the Plastic Sheet Method
    b. ASTM F1869 Test Method for Measuring Moisture Vapor Emission Rate of Concrete Subfloor Using Anhydrous Calcium Chloride
    c. ASTM F2170 Test Method for Determining Relative Humidity in Concrete Floor Slabs Using In Situ Probes

2. Wood: Moisture test as per ASTM D4444 - Standard Test Methods for Use and Calibration of Hand-Held Moisture Meters; unless otherwise indicated acceptable upper limits for wood products are < 20% at center of piece; < 15% at surface.

E. Testing for Moisture Penetration:

1. Windows: Test as per ASTM E1105 Test Method for Field Determination of Water Penetration of Installed Exterior Windows, Skylights, Doors, and Curtain Walls by Uniform or Cyclic Static Air Pressure Difference; unless otherwise indicated, acceptable upper limits are no leakage for 15 minutes.
2. Horizontal Waterproofing (not roofing): Test as per ASTM D5957 Standard Guide for Flood Testing Horizontal Waterproofing Installations; acceptable upper limits are no leakage for 15 minutes.
3. Exterior Walls:

    a. Air tightness of the enclosure test: ASTM E779 Standard Test Method for Determining Air Leakage Rate by Fan Pressurization or ASTM E1827 Standard Test Methods for Determining Air tightness of Buildings Using an Orifice Blower Door; acceptable upper limits are 0.25 CFM/sf or less at 50 Pascal's.
    b. Water Leakage: Review as per ASTM E2128 Standard Guide for Evaluating Water Leakage of Building Walls.

END OF SECTION 01 5719.11

SECTION 01 5719.12 NOISE & EXTERIOR LIGHTING MANAGEMENT

PART 1 - GENERAL

1.1 SUMMARY

A. Section includes:

1. Special requirements for noise and lighting management during construction operations.

1.2 DEFINITIONS

A. Ambient noise level: The total noise associated with a given environment, being usually a composite of normal or existing sounds from all sources near and far, excluding the noise source at issue.

B. Daytime: The hours from 7 a.m. to 5:30 p.m. on weekdays and 9 a.m. to 5:30 p.m. on weekends and holidays.

C. Nighttime: All non-daytime hours.

D. Receiving noise area: Any real property where people live or work and where noise is heard, excluding the project or source area

PART 2 - PRODUCTS (Not Used)

PART 3 - EXECUTION

3.1 NOISE MANAGEMENT

A. Noise Control: Perform construction operations to minimize noise. Perform noise-producing work in less sensitive hours of the day or week as directed by the Contracting Officer.

B. Prior to 8 a.m. and after 6 p.m. on weekdays or 9 a.m. to 6 p.m. on weekends and holidays, no heavy equipment may operate, no equipment or trucks outfitted with OSHA-required safety warnings may back up, no motors or engines may operate, and no generators shall operate. The Contractor shall make all employees and operators and subcontractors aware of the need to maintain quiet on the premises until 8 a.m. and promptly at 6 p.m. each day of work to reduce impacts to adjacent residents. Contractor and all employees and subcontractors shall talk softly both before and after 8 a.m. and avoid calling or shouting across long distances.

C. Perform any high intensity noise-producing work, such as operating chippers or pile drivers in less sensitive hours of the day, such as after 9 a.m., or as directed by the Contracting Officer.

D. Project specific noise management requirement may be prescribed by the Contracting Officer to protect wildlife, natural quiet, or visitor experience.

3.2 EXTERIOR LIGHTING MANAGEMENT

A. The need for exterior temporary lighting shall be avoided or minimized. If nighttime work is required or approved by the Contracting Officer, the contractor shall provide specifications for the actual lighting to be used, and have Contracting Officer approval before bringing the lighting onto the site.

END OF SECTION 01 5719.12

SECTION 01 5723 - TEMPORARY STORM WATER POLLUTION PREVENTION

PART 1 - GENERAL

1.1 SUMMARY

A. NPS Standards and Guidelines require that water quality be protected at all times to ensure compliance with the Organic Act. The Contractor shall prepare an Under-An-Acre Pollution Prevention Plan (UPPP) for each project resulting in less than 1 acre of soil disturbance or not otherwise subject to the requirements of the NPDES program.

B. The work of this section consists of implementing measures to prevent discharges of pollutants, including temporary storm water pollution during construction activities, either through compliance with the NPDES permit program; or in conformance with NPS guidance for UPPPs.

C. All erosion control measures shall meet the requirements provided in the 2012 California Stormwater Quality Association (CASQA) Construction BMP Handbook and the NPS GGNRA 2010 BMP Handbook.

D. All stormwater pollution prevention shall be performed in conformance with the requirements of the California General Permit for Storm Water Discharges Associated with Construction and Land Disturbance Activities (Order 2009-0009-DWQ as amended by 2010-0014-DWQ and 2012-0006-DWQ)

1.2 DEFINITIONS

A. Environmental Pollution and Damage: The presence of chemical, physical, or biological elements or agents which adversely affect human health or welfare; unfavorably alter ecological balances; or degrade the utility of the environment for aesthetic, cultural, or historical purposes.

B. Under-An-Acre Pollution Prevention Plan (UPPP): Developed and implemented pollution prevention plan (including stormwater management measures, if needed) to protect the environment from pollutants on construction projects with less than one acre of disturbance in conformance with NPS guidelines.

C. Qualified Stormwater Pollution Prevention Plan Practitioner (QSP): Individual assigned responsibility for the implementation of all elements of the Storm Water Pollution Prevention Plan (SWPPP), including non-stormwater and stormwater visual observations, sampling and analysis and preparation of Rain Event Action Plans

D. Qualified Stormwater Pollution Prevention Plan Developer QSD): Individual who is authorized to develop and revise Storm Water Pollution Prevention Plans (SWPPPs).

1.3 SUBMITTALS

A. After contract award and before the pre-construction conference, prepare and submit:

1. A UPPP in conformance with NPS guidelines and adherence to all applicable construction storm water management practices. See UPPP Template attached at the end of the section.

B. Inspection Schedule: Submit schedule for inspection and monitoring of all storm water and pollution prevention measures.

C. BMP Selection: Submit list of stormwater BMPs proposed for use. BMPs shall meet the requirements of the 2012 CASQA Construction BMP Handbook and the NPS GGNRA 2010 BMP Handbook.

D. Erosion Control Products: Submit manufacturer's product information and installation recommendations for silt fence, filter fabric, erosion control blanket, straw bales, and any other materials proposed for use on this project. Erosion control products with plastic netting are prohibited on park lands due to natural resource concerns.

1.4 QUALITY ASSURANCE

A. The Contractor shall prepare and submit a UPPP to the Contracting Officer (CO) for review and concurrence.

B. Orientation Meeting: The Contractor shall be responsible for arranging and conducting an Erosion and Sediment Control meeting/briefing to inform all parties scheduled to be on-site during the project of the measures to be implemented for proper erosion and sediment control (may be included as part of the Pre-Construction Meeting).

1. Installation of silt fences, storm drain protection, and all other forms of erosion and sediment control shall not begin until after this meeting has occurred.

C. Pollution Prevention and Erosion Control Manager: The Contractor shall designate the Pollution Prevention and Erosion Control Manager who will be responsible for the implementation, inspection, maintenance, and amendments to the approved plan.

1. The Pollution Prevention and Erosion Control Manager shall be familiar with temporary under an acre storm water pollution prevention (UPPP) procedures and Best Management Practices (BMPs) and shall ensure that emergency procedures and the plan are updated as needed and available for inspection.

2. When changes in the approved plan are required, the Pollution Prevention and Erosion Control Manager shall prepare and certify an amendment and submit to the CO for review and concurrence.

PART 2 - PRODUCTS

2.1 UNDER-AN-ACRE POLLUTION PREVENTION PLAN:

A. Provide a UPPP which conforms to all NPS requirements (utilize provided UPPP template) and include the following information and forms:

1. Responsible Parties
2. General Information: Project Scope, Project Details, Site Information, and Spill Prevention.
3. Standards and Constraints
4. Project Scheduling
5. Known Data on Soil and Fill
6. Activities with the Potential to Generate Sediment
7. Activities and Materials with the Potential to Pollute Storm Water
8. Management and Reporting BMPs
9. Waste Management BMPs
10. Non-Storm Water Pollution Control BMPs
11. Soil Stabilization BMPs
12. Sediment Control BMPs
13. Other Pollution Control BMPs
14. References
15. Preparer's Certification
16. Appendices: Contact Information, Pollution Prevention Control Map or Sheet(s), Standard Installation Specifications for each BMP, and Blank forms.

PART 3 - EXECUTION

3.1 ENVIRONMENTAL PROTECTION

A. Protection of Natural Resources: Comply with applicable regulations and these specifications. Preserve the natural resources within the project boundaries and outside the limits of work performed under this Contract in their existing condition or restore to an equivalent or improved condition as approved by the CO.

B. Construction Zone: Arrange construction activities to minimize pollution (i.e., erosion, trash, etc.) to the maximum practical extent.

1. Clearing, excavation, and grading shall be limited to those areas of the project site necessary for construction. Minimize the area exposed and unprotected.
2. Clearly mark and delineate the limits of work activities.
3. Equipment shall not be allowed to operate outside the limits of work or to disturb existing vegetation.

4. Excavation and grading shall be completed during the dry season to the maximum extent possible
5. Material should be stored away from locations where water is present to the greatest extent practicable.

3.2 REGULATORY REQUIREMENTS

A. Permits: The Contractor shall provide the Golden Gate NRA Environmental & Safety Programs Manager with all information required by the State of California to obtain all required NPDES permits in a manner that results in no impacts to scheduled work. The Contractor shall account for the possibility of significant lead time in scheduling and executing the work.

1. Implement the requirements of the California Construction General Permit and EPA NPDES requirements for erosion control due to storm water runoff during construction.
2. Implement all good housekeeping practices, inspections and record keeping.

B. CO Notification: The Contractor shall notify the CO in writing and by telephone of the following events:

1. The required erosion and sediment control meeting/briefing.
2. Following installation of required sediment control structures.
3. Prior to removal of or modification to sediment control structures.
4. Prior to removal of all sediment control structures.

C. Precipitation Monitoring: The Contractor's QSP shall obtain, on a daily basis, a printed copy of the precipitation forecast information from the National Weather Service Office (e.g., by entering the zip code of the project's location at http://srh.noaa.gov/forecast). This printed forecast shall be maintained with the project UPPP and provided to the Environmental & Safety Programs Manager with the Annual Report information and NOT information.

3.3 UNDER AN ACRE POLLUTION PREVENTION PLAN

A. Review and Acceptance: The Contractor and the CO will jointly review the draft UPPP and agree to any needed revisions. The Contractor shall incorporate all revisions, sign, and submit the final Plan to the CO. The final UPPP will be the document enforced on the project.

1. The accepted UPPP will describe and ensure implementation of the practices which will be used to reduce the pollutants in storm water discharges.
2. The Contractor shall maintain a current copy of the UPPP and all associated records and forms at the jobsite throughout the duration of the project.
3. The UPPP shall be available at all times for public inspection and for the inspection and use of the CO.
4. Approval of Contractor's UPPP will not relieve the Contractor of responsibility for compliance with applicable environmental regulations.

B. Implementation: Implement the UPPP as required throughout the construction period and maintain all erosion control elements in proper working order.

1. Do not perform clearing and grubbing or earthwork until the UPPP has been implemented.

3.4 SITE INSPECTIONS AND REVISIONS

A. GOGA Inspections: The Contractor and the CO will perform a weekly inspection of the site.

1. The inspection shall include disturbed areas that have not been completely stabilized, areas used for storage of materials, locations where vehicles enter or exit the site, and all other erosion and sediment controls that are included in the UPPP.
2. Inspections shall be documented.
3. The inspection forms shall be retained onsite in the UPPP notebook throughout the construction period.

B. Repairs and Revisions

1. The Contractor shall initiate all repairs to BMPs and Erosion or Pollution control measures within 72 hours of identification of the deficiency and complete the repairs or changes as soon as possible.

C. UPPP Revisions: It may be necessary to revise the UPPP during construction to make necessary improvements, revisions, or to respond to unforeseen conditions noted during construction or site inspections.

1. The UPPP shall specify the mechanism whereby revisions may be proposed by the Contractor or the CO.
2. All revisions or amendments to the UPPP shall be made by the Pollution Prevention and Erosion Control Manager.
3. The Contractor and the CO will jointly review each revision to the UPPP before changes are incorporated and implemented. The Contractor will then provide a revised copy of the UPPP to the CO.
4. Accepted modifications will be implemented within 7 calendar days following the date of the inspection when deficiencies or necessary corrections are first noted.

D. Negligence: Provide additional temporary erosion and pollution controls made necessary by Contractor's errors or negligence at no additional cost to the Government.

3.5 HOUSEKEEPING AND SITE MANAGEMENT

A. Materials stored on site should be stored in conformance to federal, state, local, and manufacture's regulations and specifications. Additionally, BMPs should be used to minimize the risk of materials coming into contact with environmental conditions (i.e. water and wind) that could disperse them.

B. Solid waste should be managed in conformance to federal, state, and local regulations. See Specification Section 017419 Construction Waste Management and Disposal BMPs should be used to minimize the risk of materials coming into contact with the environmental conditions (i.e. water and wind) that could disperse them.

C. Hazardous waste (including contaminated soil) should be managed in conformance to federal, state, local and NPS regulations and guidelines.

D. Housekeeping measures should be performed as required by the California Construction General Permit.

3.6 EROSION CONTROL MEASURES

A. Erosion control measures shall consist of any and all BMPs for storm water discharges, including but not limited to silt fencing, barrier protectors, straw bales, temporary soil retention blankets, excelsior drainage filters, sediment traps and berms. Straw waddles shall be weed-free using rice straw or other material approved by the CO.

B. Utilize BMPs to form sediment traps and to control run-on and run-off into other areas, including creeks, streams, marshes, access roads, well areas, and the staging areas.

C. Erosion control measures shall be used to contain only direct precipitation in the construction zone. The contained water shall be allowed to percolate into the ground or drain slowly through the drainage filter sediment traps.

D. Earthen sediment traps or holding ponds shall not be used unless accepted by the CO.

E. Reduce runoff velocity as well as direct surface runoff around and away from all fuel containment, storage, and borrow areas.

F. Divert surface runoff around and away from cut and fill slopes.

G. Place drainage filters around all catch basins to create sediment traps to control run-off from the construction area.

H. Excess water used for dust control shall be contained within the demolition areas by the erosion control measures.

I. The Contractor shall prevent the deposition of materials onto paved areas. The Contractor shall inspect the paved areas for deposited materials daily and remove the materials immediately.

J. Furnish, install, maintain, and operate necessary control measures and other equipment necessary to prevent erosion as described in the approved UPPP.

K. Before the work begins, sufficient equipment shall be available on the site to assure that the operation and adequacy of the erosion control system can be maintained.

3.7 MAINTENANCE OF TEMPORARY FACILITIES

A. Ensure erosion and sediment control structures remain effective throughout excavation and grading operations. Relocate structures as necessary.

B. Inspect control structures before each likely precipitation event, at a minimum of every 24 hour interval during an extended rain event, and after each significant rainfall. A likely precipitation

event is any weather pattern that is forecast to have a 50% or greater probability of producing precipitation in the project area. Promptly repair breaches which occur.

C. The Contractor shall remove entrapped sediment from behind sediment controls after each storm.

3.8 REPORTING

A. If an unauthorized discharge occurs or if the project receives a written notice or order from any regulatory agency, the Contractor will immediately notify the CO and shall, within 2 days, provide all information necessary for the Environmental & Safety Programs Manager to file a written report to the Agency(ies) with Jurisdiction of the discharge event, notice, or order. Corrective measures shall be implemented immediately following the discharge, notice, or order. The report to the Agency(ies) with Jurisdiction shall contain the following items at a minimum:

1. The date, time, location, nature of operation, and type of discharge, including the cause or nature of the notice or order.
2. The BMPs deployed before the discharge event, or prior to receiving the notice or order.
3. The date of deployment and type of BMPs deployed after the discharge event, or after receiving the notice or order, including additional BMPs installed or planned to reduce or prevent re-occurrence.
4. An implementation and maintenance schedule for any affected BMPs.

3.9 SEDIMENT DISPOSAL

A. Sediment excavated from temporary sediment control structures shall be disposed on the site with general fill, or with topsoil. Sediment shall be allowed to dry out as required before reuse.

B. Contractor shall place the sediment removed from traps and other structures where it will not enter a storm drain or watercourse and where it will not immediately reenter the basin.

3.10 REMOVAL OF TEMPORARY STORM WATER POLLUTION CONTROL MEASURES

A. All temporary control measures shall be removed with permission of the CO within 20 working days after final acceptance of the project, and/or once grading is completed and slopes have stabilized.

END OF SECTION 01 5723

NOTE: For guidance on how to complete this template see the Under-An-Acre Pollution Prevention Plan (UPPP) Guideline on the DSC Workflows website.

UNDER-AN-ACRE POLLUTION PREVENTION PLAN (UPPP)

TEMPLATE

Project Title

Park Name

NPS Contract Number

UPPP Prepared by:
Company Name
Address 1
Address 2
City, State, ZIP
Telephone

Name and Title of Preparer:
Name and Title of Preparer

UPPP Preparation Date:
Date

Table of Content

1 General Information 10
1.1 Responsible Parties 10
1.2 UPPP Amendments 10
1.3 Project Scope 10
1.4 Standards and Constraints 10
1.5 Spill Prevention 10
2 Project Details that Relate to the UPPP 11
2.1 Project Scheduling 11
2.2 Site Information 11
2.3 Known Data on Soil and Fill 11
2.3.1 Soil 11
2.3.2 Fill 12
2.4 Construction Information 12
2.4.1 Activities with the Potential to Generate Sediment 12
2.4.2 Activities and Materials with the Potential to Pollute Storm Water 12
3 Best Management Practice for Project 13
3.1 Management and Reporting 13
3.2 Waste Management 13
3.3 Non-Storm Water Pollution Control 13
3.4 Soil Stabilization 14
3.5 Sediment Control 14
3.6 Other Pollution Control 14
4 References 16

Appendices

A. Contact Information
B. Pollution Prevention Control Map or Sheet(s)
C. Standard Installation Specifications for each BMP
D. Blank forms

1 General Information

1.1 Responsible Parties

The following people and their companies are responsible for the implementation of this Under-an-acre Pollution Prevention Plan (UPPP) and their complete contact information can be found in Appendix A.

The Company responsible for the UPPP is: *Name, Company, and phone*
The UPPP Preparer assigned to this project is: *Name, Company, and phone*
The UPPP Manager assigned to this project is: *Name, Company, and phone*
Additional UPPP staff are: *Name, Company, and phone; Name, Company, and phone; etc.*

1.2 UPPP Amendments

When changes in the approved UPPP are required, the contractor shall prepare and certify an amendment and submit it to the CO for review and approval. See Division 1 Specifications, Section 01 57 23 – Amending UPPPs.

UPPP Amendment Log

Amendment No.	Date	Brief Description of Amendment	Prepared By

1.3 Project Scope

Provide information in a narrative format that can be easily understood by a person who is not familiar with the project and explain the projects purpose, work scope, general description of location, and any special feature on or adjacent to the project site. Add UPPP Vicinity Map to Appendix B.

1.4 Standards and Constraints

Provide text to explain the possible constraints imposed on the project, such as: permits requirements relevant to the UPPP; National Environmental Policy Act (NEPA) requirements relevant to the UPPP; and standards or requirements that do not apply.

1.5 Spill Prevention

The Environmental Protection Agency (EPA) has promulgated an oil pollution prevention regulation requiring facilities to prepare and implement Spills Prevention Control and Counter measures (SPCC) plan to prevent discharge of oil or other petroleum products into waters of the United States.
If a separate SPCC is not being prepared for the project, include a list of SPPC BMPs in this section.

2 Project Details that Relate to the UPPP

2.1 Project Scheduling

Include in the project Gantt chart a Section Called "UPPP". Within this section include the UPPP schedule items and clearly show how the rainy season relates to soil-disturbing and re-stabilization activities. The schedule shall contain an adequate level of detail to show major activities sequenced with implementation of construction site BMPs, possibly including but not limited to the list below, which should be edited as required:

- project start and finish dates
- rainy season dates
- mobilization dates
- mass clearing and grubbing/roadside clearing dates
- major grading/excavation dates
- special dates named in permits
- rainy season implementation schedule
- deployment of temporary BMPs, by BMP
- deployment of BMPs, by BMPs
- final stabilization activities staged over time for each area of the project

2.2 Site Information

Provide the following information in a narrative and table format, that can be easily understood by a person who is not familiar with the project, possibly including but not limited to the list below, which should be edited as required:

- Project size (acres)
- Area of disturbance (acres)
- Impervious area
    - before
    - after
- Existing vegetative cover (type and present cover)
- Site topography
    - Drainage
    - Slope
    - Watershed
- Receiving water (including storm drains)
- Environmentally sensitive areas

2.2.1 Known Data on Soil and Fill

2.2.1.1 Soil

In this section, at a minimum, provide a narrative and table describing types, nature and properties of the project site's soil, particularly as it relates to erosion by water, wind, or other agent. If warranted, include a map of the site's soils.

2.2.1.2 Fill

In this section provide a narrative and table describing the nature and properties of any know fill. Include the fill's potential to contain pollutants that could be mobilized by storm water if disturbed. If needed, please provide a map of the location of fill.

2.3 Construction Information

2.3.1 Activities with the Potential to Generate Non-Storm Water Pollution

Provide text in list format that explains the possible activity sources with the potential to generate non-storm water pollution. Such as, but not limited to, the list below which should be edited as required:

- Dust generated by scraping or grading
- Trash or debris
- Other

2.3.2 Activities and Materials with the Potential to Pollute Storm Water

Provide text in list format that explains the possible activity sources that may generate non-sediment pollutants. Such as, but not limited to, the list below which should be edited as required:

- General construction activities and litter
- Vehicle fueling, repair and fluids (oil, grease, petroleum, and coolants)
- Paints
- Solvents, thinners, acids
- Mortar mix
- Treated lumber (materials and wastes)
- Demolition and masonry block rubble
- Landscaping, raw materials and wastes (topsoil, plant materials, herbicides, fertilizers, pesticides, mulch)
- BMP materials (sandbags, liquid copolymer)
- Base and sub-base material
- Asphaltic emulsions associated with asphalt-concrete paving operations
- Cement materials
- Concrete curing compounds
- Other

2.3.3 Activities with the Potential to Generate Sediment

Provide text in list format that explains the possible activity sources with sediment as a pollutant. Such as, but not limited to, the list below which should be edited as required:

- Lay down area and stockpiles
- Grubbing
- Grading
- Concrete work
- Trenching
- Dewatering
- Landscaping
- Other

3 Temporary Best Management Practices for Project

Based on the project location's characteristics, soil, and the scope of work, this project will require the following categories of BMPs:

- Management and Reporting;
- Waste Management;
- Non-Storm Water Pollution Control;
- Soil Stabilization (erosion prevention);
- Sediment Control;
- Other Pollution Control.

Each of the above identified project activities will be managed by BMPs in one or more of these sections below.

Specific BMPs for each category are discussed below and relevant installation specifications can be found Appendix C.

3.1 Management and Reporting

Management and Reporting is a required section. This section shall include the project information and activities and detail which BMPs will be used and why. Such as, but not limited to, the list below; which should be edited as required:

- Who is responsible and contact information
- Inspection procedures
- Incident reporting
- Incident remediation
- UPPP adaptive management and addendums
- Reference to reporting and inspection forms in appendix
- Maintenance of BMPs
- Weather monitoring
- Or other relevant BMP.

3.2 Waste Management

Waste Management is a required section. This section shall include the project information and activities and detail which BMPs will be used and why. Such as, but not limited to, the list below; which should be edited as required:

- Material Storage
- Solid Waste management
- Material use
- Hazardous waste management (including contaminated soil)
- Sanitary/septic waste
- Or other relevant BMP.

3.3 Non-Storm Water Pollution Control

In this section take the project information and activities then detail which BMPs will be used and why. Such as, but not limited to, the list below; which should be edited as required:

- De-watering
- Water sampling for non-visible pollutants

- Vehicle fueling
- Vehicle cleaning
- Demolition controls
- Or other relevant BMP.

If this section is not relevant to the project, then make a statement that the project activities were reviewed and no Non-Storm Water Pollution Control BMPs are needed.

3.4 Erosion Control - Soil Stabilization

Consider the following possible issues and provide text to explain the list below, which should be edited as required:

- Exposed soil, active
- Exposed soil, temporary inactive
- Exposed soil, work completed
- Slopes
- Or other relevant BMP.

If this section is not relevant to the project, then make a statement that the project activities were reviewed and no Soil Stabilization BMPs are needed.

3.5 Sediment Control

Consider the following possible issues and provide text to explain the list below, which should be edited as required:

- Drainage control
- Soil stockpiles
- Storm drain protection
- Public roadways
- Or other relevant BMP.

If this section is not relevant to the project, then make a statement that the project activities were reviewed and no Sediment Control BMPs are needed.

3.6 Other Pollution Control

Consider the following possible issues and provide text to explain the list below, which should be edited as required:

- Wind erosion
- Vehicle tracking pollutants:
    - Offsite: mud
    - On site: Invasive species
- Or other relevant BMP.

If this section is not relevant to the project, then make a statement that the project activities were reviewed and no Other Pollution Control BMPs are needed.

4 Permanent Pollution Control Practices

This section shall include a list with a short description of any Permanent Pollution Control Practices for the project. The information should include which BMPs will be used, why and to what standard. Include design drawings at the end of this report.

5 References

Prepare a list of the documents referenced in and used to prepare the UPPP; Project Plans & Specifications, reports, design, and storm water management related documents.

The reference for each document shall include:

- *Complete name of the referenced document*
- *Number of the document (if applicable)*
- *Author*
- *Date Published or Produced (in the case of internal documents)*
- *Document date/revision that applies*

Documents should include:

- *Permits*
- *Geo-technical Reports*
- *Regulatory correspondences providing guidance*
- *Project Plans*
- *NPS contract*

Appendices

A. Contact Information
B. Vicinity and Pollution Prevention Control Map or Sheet(s)
C. Standard Installation Specifications for each BMP
D. Blank forms

Appendix A: Contact Information

Include:
The Company responsible for the UPPP is: Name, Company and contact information
The UPPP Preparer assigned to this project is: Name, Company and contact information
The UPPP Manager assigned to this project is: Name, Company and contact information

Appendix B: Pollution Prevention Control Maps or Sheet(s)

Include:
UPPP Vicinity Map: A map extending approximately one quarter mile beyond the property boundaries of the construction site showing: the construction site, surface water bodies (including known springs and wetlands), known wells, an outline of offsite drainage areas that discharge into the construction site, general topography, and the anticipated discharge location(s) where the construction site's storm water discharges to a municipal storm drain system or other water body. A U.S. Geological Survey (USGS) quad map may be used for showing the project site and a one-quarter mile extension beyond the property boundaries of the construction site.

Pollution Prevention Control Map(s): A map clearly showing boundaries of the construction site showing and includes: symbols for the location of BMPs, surface water bodies (including drainages and wetlands), topography, municipal storm drain system intake location, and UPPP discharge points.

Appendix C: Standard Installation Specifications for each BMP

For each BMP include a section that provides sufficient information for the installation and maintenance of the structure. Include installation details, material lists, narratives, and resource references.

Appendix D: Blank forms

Include:

1. *Inspection Form*
2. *Incident reporting Form*
3. *UPPP Amendment Form*

Attachments

1. Permits (if any)
2. Spills Prevention Control and Counter measures plan (if required)
3. Supporting reports (if any)
4. Permanent Pollution Control Practices for Project (if any)

SECTION 01 6700 - PRODUCT REQUIREMENTS

PART 1 - GENERAL

1.1 SUMMARY

A. This Section includes administrative and procedural requirements for selection of products for use in this Project; product delivery, storage, and handling; manufacturers' standard warranties on products; special warranties; and environmental requirements.

1.2 DEFINITIONS

A. Products: Items purchased for incorporating into the Work, whether purchased for Project or taken from previously purchased stock. The term "product" includes the terms "material," "equipment," "system," and terms of similar intent.

1. Named Products: Items identified by manufacturer's product name, including make or model number or other designation shown or listed in manufacturer's published product literature, that is current as of date of the Contract Documents.
2. New Products: Items that have not previously been incorporated into another project or facility, except that products consisting of recycled-content materials are allowed, unless explicitly stated otherwise. Products salvaged or recycled from other projects are not considered new products.
3. Comparable Product: Product that is demonstrated and approved through submittal process, or where indicated as a product substitution, to have the indicated qualities related to type, function, dimension, in-service performance, physical properties, appearance, and other characteristics that equal or exceed those of specified product.

B. Basis-of-Design Product Specification: Where a specific manufacturer's product is named and accompanied by the words "basis of design," including make or model number or other designation, to establish the significant qualities related to type, function, dimension, in-service performance, physical properties, appearance, and other characteristics for purposes of evaluating comparable products of additional manufacturers named in the specification.

C. Definitions pertaining to sustainable development: As defined in ASTM E2114

D. Biobased Materials: As defined in the Farm Security and Rural Investment Act, for purposes of Federal procurement of biobased products, “biobased” means a “commercial or industrial product (other than food or feed) that is composed, in whole or in significant part, of biological products or renewable domestic agricultural materials (including plant, animal, and marine materials) or forestry materials.” Biobased materials also include fuels, chemicals, building materials, or electric power or heat produced from biomass as defined by The Biomass Research and Development Act of 2000. See http://www.biopreferred.gov/

1. Biobased content: The amount of biobased carbon in the material or product as a percentage of weight (mass) of the total organic carbon in the material or product.

E. Chain-of-Custody: Process whereby a product or material is maintained under the physical possession or control during its entire life cycle.

F. Comprehensive Procurement Guidelines: The CPG program is authorized by Congress under Section 6002 of the Resource Conservation and Recovery Act (RCRA) and Executive Order 13423. EPA is required to designate products that are or can be made with recovered materials, and to recommend practices for buying these products. Once a product is designated, procuring agencies are required to purchase it with the highest recovered material content level practicable. See http://www.epa.gov/cpg

G. Environmentally preferable products (EPPs): Products and services that have a lesser or reduced effect on the environment in comparison to conventional products and services. Refer to EPA's Final Guidance on Environmentally Preferable Purchasing for more information http://www.epa.gov/epp/pubs/guidance/finalguidance.htm.

H. Stewardship: Responsible use and management of resources in support of sustainability.

I. Sustainability: The maintenance of ecosystem components and functions for future generations.

1. Recycled Content Materials: Products that contain pre-consumer or post-consumer materials as all or part of their feedstock. Recycled content claim shall be consistent with ISO 140001 Standard for the Use of Environmental Marketing Claims.
2. Rapidly Renewable Material: Material made from plants that are typically harvested within a ten-year cycle.
3. Regional Materials: Materials that are manufactured and extracted, harvested, or recovered within a radius of 500 miles from the Project location.

SUBMITTALS

J. Record Submittals as specified in Closeout Procedures, submit the following:

1. Affirmative Procurement Reporting Form. Submit on form in Appendix A of this Section, or similar form as approved by Contracting Officer.
2. Submit environmental data in accordance with Table 1 of ASTM E2129 for the following products:

a. Finish Carpentry
b. Wood Siding
c. Plastic Fabrications
d. Building Insulation
e. Roofing
f. Joint Sealers
g. Wood & Plastic Doors
h. Windows
i. Glazed Curtain Wall
j. Gypsum Board
k. Tile
l. Resilient Wallboard
m. Acoustical Ceilings
n. Resilient Flooring

o. Paints & Coatings
p. Toilet Compartments
q. Plumbing fixtures and equipment.
r. HVAC equipment
s. Lighting equipment

3. Material Safety Data Sheets (SDS): For each product required by OSHA to have a SDS, submit an SDS. SDS shall be prepared within the previous five years. Include information for SDS Sections 1 – 16 in accordance with ANSI Z400.1 and as follows:

   a. Section 1: Chemical Product and Company Identification.
   b. Section 2: Composition/Information on Ingredients.
   c. Section 3: Hazards Identification.
   d. Section 4: First Aid Measures.
   e. Section 5: Fire Fighting Measures.
   f. Section 6: Accidental Release Measures.
   g. Section 7: Handling and Storage.
   h. Section 8: Exposure Controls/Person Protection.
   i. Section 9: Physical and Chemical Properties.
   j. Section 10: Stability and Reactivity Data.
   k. Section 11: Toxicological Information. Include data used to determine the hazards cited in Section 3. Identify acute data, carcinogenicity, reproductive effects, and target organ effects. Provide written description of the process used in evaluating chemical hazards relative to preparation of the SDS.
   l. Section 12: Ecological Information. Include data regarding environmental impacts during raw materials acquisition, manufacture, and use. Include data regarding environmental impacts in the event of an accidental release.
   m. Section 13: Disposal Considerations. Include data regarding the proper disposal of the chemical. Include information regarding recycling and reuse. Indicate whether or not the product is considered to be "hazardous waste" according the US EPA Hazardous Waste Regulations 40 CFR 261.
   n. Section 14: Transportation Information. Identify hazard class for shipping.
   o. Section 15: Regulatory Information. Identify federal, state, and local regulations applicable to the material.
   p. Section 16: Other Information. Include additional information relative to recycled content, biobased content, and other information regarding environmental and health impacts. Identify the date SDS was prepared.

4. Chain of Custody: Submit chain-of-custody documentation for sustainable forestry for the following products:

   a. Rough Carpentry
   b. Finish Carpentry
   c. Wood Siding

1.3 QUALITY ASSURANCE

A. Compatibility of Options: If Contractor is given option of selecting between two or more products for use on Project, product selected shall be compatible with products previously selected, even if previously selected products were also options.

1.4 PRODUCT DELIVERY, STORAGE, AND HANDLING

A. Deliver, store, and handle products using means and methods that will prevent damage, deterioration, and loss, including theft. Comply with manufacturer's written instructions.

B. Delivery and Handling:

1. Schedule delivery to minimize long-term storage at Project site and to prevent overcrowding of construction spaces.
2. Coordinate delivery with installation time to ensure minimum holding time for items that are flammable, hazardous, easily damaged, or sensitive to deterioration, theft, and other losses.
3. Deliver products to Project site in an undamaged condition in manufacturer's original sealed container or other packaging system, complete with labels and instructions for handling, storing, unpacking, protecting, and installing.
4. Inspect products on delivery to ensure compliance with the Contract Documents and to ensure that products are undamaged and properly protected.
5. Contractor is encouraged to obtain materials in biodegradable or recyclable/reusable packaging which uses the minimum amount of packaging possible.

C. Storage:

1. Store products to allow for inspection and measurement of quantity or counting of units.
2. Store materials in a manner that will not endanger Project structure.
3. Store products that are subject to damage by the elements, under cover in a weather tight enclosure above ground, with ventilation adequate to prevent condensation.
4. Store cementitious products and materials on elevated platforms.
5. Store foam plastic from exposure to sunlight, except to extent necessary for period of installation and concealment.
6. Comply with product manufacturer's written instructions for temperature, humidity, ventilation, and weather-protection requirements for storage.
7. Protect stored products from damage and liquids from freezing.
8. Store loose granular materials in a well-drained area on solid surfaces to prevent mixing with foreign matter.

1.5 PACKAGING

A. Where Contractor has the option to provide one of the listed products or equal, preference shall be given to products with minimal packaging and easily recyclable packaging as defined in ASTM D5834.

B. Maximize use of source reduction and recycling procedures outlined in ASTM D5834..

C. Provide minimum 30 percent post-consumer recycled content and minimum 100 percent recovered fiber content of industrial paperboard in accordance with EPA's Comprehensive Procurement Guidelines and ASTM D5663.

D. Provide minimum 30 percent post-consumer recycled content and minimum 50 percent recovered fiber content of carrier board in accordance with EPA's Comprehensive Procurement Guidelines and ASTM D5663.

E. Provide minimum 30 percent post-consumer recycled content and minimum 50 percent recovered fiber content of brown papers (e.g., wrapping papers and bags) in accordance with EPA's Comprehensive Procurement Guidelines and ASTM D5663.

1.6 ENVIRONMENTALLY PREFERABLE PRODUCTS

A. Provide environmentally preferable products to the greatest extent possible.

1. To the greatest extent possible, provide products and materials that have a lesser or reduced effect on the environment considering raw materials acquisition, production, manufacturing, packaging, distribution, reuse, operation, maintenance, and/or disposal of the product.
2. Eliminate the use of ozone depleting compounds during and after construction where alternative environmentally preferable products are available, consistent with either the Montreal Protocol and Title VI or the Clean Air Act Amendments of 1990, or equivalent overall air quality benefits that take into account life cycle impacts.
3. Use products meeting or exceeding EPA's recycled content recommendations for EPA-designated products. Use materials with recycled content such that the sum of post-consumer recycled content plus one-half of the pre-consumer content constitutes at least 10% (based on cost) of the total value of the materials in the project

1.7 PRODUCT WARRANTIES

A. Warranties specified in other Sections shall be in addition to, and run concurrent with, other warranties required by the Contract Documents. Manufacturer's disclaimers and limitations on product warranties do not relieve Contractor of obligations under requirements of the Contract Documents.

1. Manufacturer's Warranty: Preprinted written warranty published by individual manufacturer for a particular product and specifically endorsed by manufacturer to Owner.
2. Special Warranty: Written warranty required by or incorporated into the Contract Documents, either to extend time limit provided by manufacturer's warranty or to provide more rights for Owner.

B. Special Warranties: Prepare a written document that contains appropriate terms and identification, ready for execution. Submit a draft for approval before final execution.

1. Manufacturer's Standard Form: Modified to include Project-specific information and properly executed.
2. Specified Form: When specified forms are included with the Specifications, prepare a written document using appropriate form properly executed.
3. Refer to Divisions 02 through 49 Sections for specific content requirements and particular requirements for submitting special warranties.

C. Submittal Time: Comply with requirements in Division 01 Section "Closeout Procedures."

PART 2 - PRODUCTS

2.1 PRODUCT SELECTION PROCEDURES

A. General Product Requirements: Provide products that comply with the Contract Documents, that are undamaged and, unless otherwise indicated, that are new at time of installation.

1. Provide products complete with accessories, trim, finish, fasteners, and other items needed for a complete installation and indicated use and effect.
2. Standard Products: If available, and unless custom products or nonstandard options are specified, provide standard products of types that have been produced and used successfully in similar situations on other projects.
3. Government reserves the right to limit selection to products with warranties not in conflict with requirements of the Contract Documents.
4. Where products are accompanied by the term "as selected," Contracting Officer will make selection.
5. Where products are accompanied by the term "match sample," sample to be matched is Governments.
6. Descriptive, performance, and reference standard requirements in the Specifications establish "salient characteristics" of products.

B. Product Selection Procedures:

1. Product: Where Specifications name a single product and manufacturer, provide the named product that complies with requirements or approved equal.
2. Manufacturer/Source: Where Specifications name a single manufacturer or source, provide a product by the named manufacturer or source that complies with requirements or approved equal.
3. Available Products: Where Specifications include a list of names of both products and manufacturers, provide one of the products listed, or an unnamed product, that complies with requirements. Comply with provisions in Part 2 "Comparable Products" Article for consideration of an unnamed product.
4. Available Manufacturers: Where Specifications include a list of manufacturers, provide a product by one of the manufacturers listed, or an unnamed manufacturer, that complies

with requirements. Comply with provisions in Part 2 "Comparable Products" Article for consideration of an unnamed product.

5. Product Options: Where Specifications indicate that sizes, profiles, and dimensional requirements on Drawings are based on a specific product or system, provide the specified product, system, or approved equal.
6. Basis-of-Design Product: Where Specifications name a product and include a list of manufacturers, provide the specified product or a comparable product by one of the other named manufacturers, or approved equal. Drawings and Specifications indicate sizes, profiles, dimensions, and other characteristics that are based on the product named.
7. Visual Matching Specification: Where Specifications require matching an established Sample, select a product that complies with requirements and matches Government's sample. Contracting Officers decision will be final on whether a proposed product matches.

    a. If no product available within specified category matches and complies with other specified requirements, comply with provisions in Part 2 "Product Substitutions" Article for proposal of product.

8. Visual Selection Specification: Where Specifications include the phrase "as selected from manufacturer's colors, patterns, textures" or a similar phrase, select a product that complies with other specified requirements.

    a. Standard Range: Where Specifications include the phrase "standard range of colors, patterns, textures" or similar phrase, Contracting Officer will select color, pattern, density, or texture from manufacturer's product line that does not include premium items.
    b. Full Range: Where Specifications include the phrase "full range of colors, patterns, textures" or similar phrase, Contracting Officer will select color, pattern, density, or texture from manufacturer's product line that includes both standard and premium items.

2.2 COMPARABLE PRODUCTS

A. Conditions: Contracting Officer will consider Contractor's request for comparable product when the following conditions are satisfied. If the following conditions are not satisfied, Contracting Officer will return requests without action, except to record noncompliance with these requirements:

1. Evidence that the proposed product does not require revisions to the Contract Documents, that it is consistent with the Contract Documents and will produce the indicated results, and that it is compatible with other portions of the Work.
2. Detailed comparison of significant qualities of proposed product with those named in the Specifications. Significant qualities include attributes such as performance, weight, size, durability, visual effect, and specific features and requirements indicated.
3. Evidence that proposed product provides specified warranty.
4. List of similar installations for completed projects with project names and addresses and names and addresses of architects and owners, if requested.
5. Samples, if requested.

PART 3 - EXECUTION

3.1 PROTECTION AFTER INSTALLATION

A. Provide adequate coverings as necessary to protect installed materials from damage resulting from natural elements, traffic, and subsequent construction. Remove when no longer needed.

END OF SECTION 01 6700

SAMPLE AFFIRMATIVE PROCUREMENT REPORTING FORM
Recycled Content Materials & Biobased Content Materials

Project Name: _____ Project Number: _____

Contractor Name: _____ License Number: _____

Contractor Address: _____

Type of Product	Meets CPG require-ments (Y/N)	Meets Biobased require-ments (Y/N)	Meets other EPP require-ments (Y/N)	Exempted indicate 1,2,3,4	Comments

CERTIFICATION

I hereby certify the information provided herein is accurate and that the requisition/procurement of all materials listed on this form comply with current EPA standards for recycled/recovered materials content. The following exemptions may apply to the non-procurement of recycled/recovered content materials:

1. The product does not meet appropriate performance standards
2. The product is not available within a reasonable time frame
3. The product is not available competitively (from two or more sources)
4. The product is only available at an unreasonable price (compared with a comparable non-recycled content product.)

Signature: _____ Date: _____

END OF
AFFIRMATIVE PROCUREMENT REPORTING FORM
Recycled Content Materials & Biobased Content Materials

SECTION 01 7900 - DEMONSTRATION AND TRAINING

PART 1 - GENERAL

1.1 SUMMARY

A. This Section includes administrative and procedural requirements for instructing NPS personnel, including the following:

1. Demonstration of operation of systems, subsystems, and equipment.
2. Training in operation and maintenance of systems, subsystems, and equipment, including environmental considerations.
3. Demonstration and training video.

B. See Divisions 02 through 49 Sections for specific requirements for demonstration and training for products in those Sections.

1.2 GENERAL REQUIRMENTS.

A. A list of System Demonstration and Training requirements has been attached at the end of the Division 01 specifications for your convenience. The intent is to provide an overall summary of requirements and not a comprehensive list. The terms and conditions of the contract still require you to satisfy the requirements of the individual specification sections regardless of what is shown on the list.

1.3 SUBMITTALS

A. Instruction Program: Submit two copies of outline of instructional program for demonstration and training, including a schedule of proposed dates, times, length of instruction time, and instructors' names for each training module. Include learning objective and outline for each training module.

1. For each training session, the Contractor shall submit for approval a proposed outline of the subjects to be covered. The training shall not be conducted until the outline is approved.

1.4 QUALITY ASSURANCE

A. Facilitator Qualifications: A firm or individual experienced in training or educating maintenance personnel in a training program similar in content and extent to that indicated for this Project, and whose work has resulted in training or education with a record of successful learning performance.

B. Instructor Qualifications: A factory-authorized service representative, complying with requirements in Division 01 Section 014000 "Quality Requirements," experienced in operation and maintenance procedures and training.

C. Coordinate content of training modules with content of approved emergency, operation, and maintenance manuals. Do not submit instruction program until operation and maintenance data has been reviewed and approved by Contracting Officer.

PART 2 - PRODUCTS

2.1 INSTRUCTION PROGRAM

A. Program Structure: Develop an instruction program that includes individual training modules for each system and equipment not part of a system, as required by individual Specification Sections.

1. Environmental Topics

   a. Overview of environmental issues related to the building industry.
   b. Overview of environmental issues related to the Project.
   c. Overview of the sustainability features of the Project
   d. Review of site specific procedures and management plans implemented during construction:
      1) Regulatory Requirements.
      2) Indoor Air Quality (IAQ) Management.
      3) Noise & Exterior Light Management.
      4) Environmental Management.
      5) Construction Waste Management.

   e. Review of site specific procedures and management plans to be implemented during operation and maintenance.

      1) Include review of environmentally-related aspects of the Operations and Maintenance Manual.
      2) Integrated Pest Management (IPM).

B. Training Modules: Develop a learning objective and teaching outline for each module. Include a description of specific skills and knowledge that participant is expected to master. For each module, include instruction for the following:

1. Basis of System Design, Operational Requirements, and Criteria: Include system and equipment descriptions, operating standards, regulatory requirements, equipment function, operating characteristics, limiting conditions, and performance curves.
2. Documentation: Review emergency, operations, and maintenance manuals; Project Record Documents; identification systems; warranties and bonds; and maintenance service agreements.
3. Emergencies: Include instructions on stopping; shutdown instructions; operating instructions for conditions outside normal operating limits; instructions on meaning of warnings, trouble indications, and error messages; and required sequences for electric or electronic systems.
4. Operations: Include startup, break-in, control, and safety procedures; stopping and normal shutdown instructions; routine, normal, seasonal, and weekend operating instructions; operating procedures for emergencies and equipment failure; and required sequences for electric or electronic systems.

5. Adjustments: Include alignments and checking, noise, vibration, economy, and efficiency adjustments.
6. Troubleshooting: Include diagnostic instructions and test and inspection procedures.
7. Maintenance: Include inspection procedures, types of cleaning agents, methods of cleaning, procedures for preventive and routine maintenance, and instruction on use of special tools.
8. Repairs: Include diagnosis, repair, and disassembly instructions; instructions for identifying parts; and review of spare parts needed for operation and maintenance.

PART 3 - EXECUTION

3.1 INSTRUCTION

A. Facilitator: Engage a qualified facilitator to prepare instruction program and training modules, to coordinate instructors, and to coordinate between Contractor and Contracting Officer for number of participants, instruction times, and location.

B. Engage qualified instructors to instruct NPS personnel to adjust, operate, and maintain systems, subsystems, and equipment not part of a system.

C. Scheduling: Provide instruction at mutually agreed on times. For equipment that requires seasonal operation, provide similar instruction at start of each season.

1. Schedule training with NPS through the Contracting Officer with at least 7 days' advance notice.
2. Conduct training sessions after the equipment or system has been accepted and turned over to the Government. Coordinate with commissioning requirements.
3. Coordinate with Integrated pest management requirements. Refer to the specifications section and the approved IPM plan.
4. Individual sections specify the duration of training required. If no duration is listed, provide training of sufficient duration to adequately cover the subjects.

END OF SECTION 01 7900

Closeout and Operation & Maintenance (O&M) Requirements

National Park Service (NPS) - Denver Service Center (DSC) | 1-27-21

Topic	Specification Section	Requirement	Submittal Date	Completed	Received by Park
Project Record Drawings	01 7700	Complete Record Drawings			
	01 7700	Environmental Record Documents			
System Demonstration and Training	223300	Water Heater Demonstration and Training			
	233416	Centrifugal HVAC Fans			
	233433	Commercial Air Curtains			
	237423	Packaged Electric Outdoor Heating-Only Make-up Air Unit			
	260923	Engage a factory-authorized service representativee to train Owner's maintenance personnel			
	262413	Engage a factory-authorized service representativee to train Owner's maintenance personnel			
	264313	Train owner's maintenance personnel to operate and maintain SPDs.			
	270010	Train end user's maintenance personnel on all systems.			
	283111	Engage a factory-authorized service representativee to train Owner's maintenance personnel			
Tools Spare Parts Equipment	01 7700	Special tools			
Extra Stock	271513	Extra Materials			
	281400	Extra card readers			
	09 51 13	ACT - Extra Materials			
	09 65 43	Linoleum - Extra Materials			
	09 91 23	Interior Painting - Extra Materials			
	09 93 00	Staining and Transparent Finishing - Maintenance Materials			
	10 26 00	Wall and Door Protection - Maintenance Materials			
Reports	221116	Domestic Water System Purging and disinfecting report			
	221316	Sanitary and Waste Field Quality Report - leak testing			
	230593	Test and Balance Report			
	233113	Duct Leakage Tests			
	260519	Test Reports for Conductors and Cables			
	262413	Test and inspection reports			
	262416	Test and inspection reports			
	264113	Test and inspection reports			
Keys & Keying Schedule					
	08 71 00	Door Hardware - Keys and Keying Schedule			
	07 54 19	PVC Roofing - Maintenance Data			
	07 54 19	PVC Roofing - Certified Statement re: Warranty			
	07 62 00	Sheet Metal Flashing and Trim - Maintenance Data			
	07 84 13	Penetration Firestopping - Installer Certificates			
	07 84 43	Joint Firestopping - Installer Certificates			

Topic	Specification Section	Requirement	Submittal Date	Completed	Received by Park
O&M Data Warranties Guarantees	07 92 00	Joint Sealant Schedule			
	08 14 16	Flush Wood Doors - Special Warranties			
	08 41 13	Aluminum Storefront - Operation and Maintenance Data			
	08 41 13	Aluminum Storefront - Warranty Information			
	08 44 13	Aluminum Curtain Walls - Maintenance Data			
	08 51 13	Aluminum Windows - Warranty Documentation			
	08 71 00	Door Hardware - Operations and Maintenance Data			
	09 51 13	ACT - Maintenance Data			
	09 65 43	Linoleum - Maintenance Data			
	09 67 23	Resinous Flooring - Maintenance Data			
	09 93 00	Staining and Transparent Finishing - Maintenance Data			
	10 14 23.16	Room Identification Panel Signage - Warranty			
	10 26 00	Wall and Door Protection - Maintenance Data			
	10 28 00	Toilet, Bath, and Laundry Accessories - Maintenance Data			
	10 44 13	Fire Protection Cabinets - Maintenance Data			
	12 32 16	Manufactured Plastic Laminate Clad Casework - Quality Standard Compliance Certificates			
	12 32 16	Manufactured Plastic Laminate Clad Casework - Sample Warranty			
	12 36 21	Paper Resin Countertops - Maintenance Data			
	220519	O&M for thermometers and gauges			
	221119	O&M for Domestic Water Piping Specialties			
	221123	O&M and Warranty for Inline Domestic Water Pump			
	221316	Warranty for Piping			
	223300	O&M and Warranty for Water Heaters			
	223213	O&M			
	224216	O&M			
	233399	O&M - Dampers			
	233416	O&M and Warranty for HVAC Fans			
	233433	O&M and Warranty for Air Curtains			
	237423	O&M and Warranty for Packaged Electric Outdoor Heating-only Make-up Air Unit			
	238236	O&M and Warranty for Finned Tube Radiation Heaters			
	238239	O&M and Warranty for Cabinet Unit Heaters			
	260526	Grounding testing requirements			
	260923	Emergency, operation, and maintenance manuals			
	262413	Routine maintenance requirements, testing requirements, time-current coordination curves			
	262416	Testing requirements, time-current curves			
	262713	For electricity-metering equipment			
	262413	Special Warranty			
	262416	Special Warranty			
	262726	Packing label warnings and instruction manuals			
	264113	Dimensioned site plan, testing and inspection record			
	264313	Manufacturer's Warranty			
	270010	Provide maintenance manuals and operating instructions.			
	271513	Warranty Documentation			
	271513	Maintenance Data			
	280010	Access Control System maintenance data			
	281300	Access Control Software maintenance			
	281400	Warranty Documentation			
	283100	Special Warranty			
	283100	Data for each project, master control-unit hardware and software data			
	283111	Fire alarm systems and components			

SECTION 01 81 13 - SUSTAINABLE DESIGN REQUIREMENTS FOR NON-LEED™ PROJECTS

PART 1 - GENERAL

1.1 SUMMARY

A. Section includes general requirements and procedures for compliance with Federal Sustainability requirements. This project is not seeking Leadership in Energy & Environmental Design (LEED™) certification but shall comply with applicable Federal Sustainability requirements. Requirements include laws (Executive Orders (EO) and regulations), management policies, building codes and standards, Federal directives, and National Park Service (NPS) guidelines.

B. Many Federal requirements can be achieved only through intelligent and integrated design of the project and are beyond control of the Contractor. Certain requirements relate to the products and procedures used for construction, therefore, full cooperation of the Contractor and Subcontractors is essential to successful compliance with Federal requirements.

C. Contractors shall familiarize themselves with relevant requirements and provide necessary information and instruction to subcontractors and installers.

1. Some requirements involve quantifying percentages by weight; these require careful recordkeeping and reporting by Contractor.
2. See Denver Service Center (DSC) Workflows Sustainability Standards for a list of Federal Sustainability requirements. Applicable Federal Sustainability requirements are also summarized on the project's NPS Project Sustainability Checklist. Contractor is responsible for ensuring the elements in the NPS Project Sustainability Checklist, identified by the Architect/Engineer (A/E) team, are incorporated into the construction of the project.

D. Related Sections:

1. See Divisions 1 through 49 Sections for sustainability requirements specific to work of each of these Sections.

1.2 DEFINITIONS

A. Chain-of-Custody Certificates: Certificates signed by manufacturers certifying wood used to make products was obtained from forests certified by a Forest Stewardship Council (FSC)-accredited certification body to comply with FSC Standard STD-01-001, "FSC Principles and Criteria for Forest Stewardship." Certificates shall include evidence manufacturer is certified for chain of custody by an FSC-accredited certification body.

B. LEED™: Leadership in Energy & Environmental Design. Sustainability rating system developed by United States Green Building Council (USGBC).

C. Rapidly Renewable Materials: Materials made from plants typically harvested within 10-year or shorter cycle. Rapidly renewable materials include products made from bamboo, cotton, flax, jute, straw, sunflower seed hulls, vegetable oils, or wool.

D. Recycled Content: Recycled content value of a material assembly shall be determined by weight.

1. "Post-consumer" material: Waste material generated by households or by commercial, industrial, and institutional facilities in their role as end users of product, which can no longer be used for intended purpose.
2. "Pre-consumer" material: Material diverted from waste stream during manufacturing process. Reutilization of materials such as rework, regrind, or scrap generated in a process and capable of being reclaimed within the same process that generated it is excluded.

E. Biopreferred Products: Commercial or industrial products (other than food or feed) composed in whole, or in significant part, of biological products, renewable agricultural materials (including plant, animal, and marine materials), or forestry materials and includes biobased intermediate ingredients or feedstocks.

1.3 FEDERAL SUSTAINABILITY DOCUMENTATION SUBMITTALS

A. Most of Federal sustainability documentation submittals are aggregations of submittals already required in relevant technical specifications. They are mentioned here to ensure they are collected and organized together to efficiently document compliance with sustainability requirements.

B. Provide preliminary submittals to NPS indicating how the following Federal requirements will be met:

1. Recycled Content: List of specified/proposed materials with recycled content. Indicate cost, post-consumer recycled content, and pre-consumer recycled content for each product having recycled content.

2. Certified Wood: Product data and/or chain-of-custody certificates for products containing certified wood. Include statement indicating cost for each certified wood product.

3. Construction Indoor Air Quality (IAQ) Management Plan – During Construction:

a. Construction indoor-air-quality management plan.
b. Product data for temporary filtration media.
c. Product data for filtration media used during occupancy.
d. Construction Documentation: Six photographs at three different times during construction period, along with brief description of the Sheet Metal and Air Conditioning Contractors' National Association (SMACNA) approach employed, documenting implementation of indoor-air-quality management measures, such as protection of ducts and on-site stored or installed absorptive materials.

4. Construction IAQ Management Plan – Before Occupancy:

a. Signed statement describing building air flush-out procedures including dates when flush-out was started and completed and statement filtration media was replaced after flush-out.

b. Product data for filtration media used during flush-out and during occupancy.

5. Low Emitting Materials - Adhesives and Sealants: Product data for adhesives and sealants used inside weatherproofing system indicating Volatile Organic Compound (VOC) content of each product used. Indicate VOC content in g/L (grams per liter) calculated according to 40 CFR 59 Subpart D (Code of Federal Regulations).
6. Low Emitting Materials - Paints and Coatings: Product data for paints and coatings used inside weatherproofing system indicating chemical composition and VOC content of each product used. Indicate VOC content in g/L calculated according to 40 CFR 59 Subpart D.
7. Low Emitting Materials - Flooring: Product data for products containing composite wood or agrifiber products or wood glues indicating they do not contain urea-formaldehyde resin.
8. Biopreferred Products: Provide list of bio-based products used on project.

PART 2 - PRODUCTS

2.1 RECYCLED CONTENT OF MATERIALS

A. Recycled Content: Provide building materials with recycled content such that post-consumer recycled content plus one-half of pre-consumer recycled content constitutes a minimum of **15** percent of cost of materials used for Project.

1. Determine cost of post-consumer recycled content by dividing weight of post-consumer recycled content in item by total weight of item and multiplying by cost of item.
2. Determine cost of pre-consumer recycled content of an item by dividing weight of pre-consumer recycled content in item by total weight of item and multiplying by cost of item.
3. Do not include mechanical and electrical components, and specialty items such as elevators and equipment in calculation.

2.2 BIOPREFERRED PRODUCTS

A. Use bio-based products found on United States Department of Agriculture (USDA) Biopreferred Products list where applicable on project.

2.3 LOW-EMITTING MATERIALS

A. For applications inside the weatherproofing system, use adhesives and sealants that comply with VOC content limits in Specification Divisions 2 through 49.

B. For field applications inside the weatherproofing system, use paints and coatings that comply with VOC content limits in Specification Divisions 2 through 49.

C. Do not use composite wood or agrifiber products or adhesives that contain urea-formaldehyde resin.

PART 3 - EXECUTION

3.1 REFRIGERANT AND CLEAN-AGENT FIRE-EXTINGUISHING-AGENT REMOVAL

A. Remove Chlorofluorocarbons (CFC)-based refrigerants from existing Heating, Ventilation, Air Conditioning, and Refrigeration (HVAC&R) equipment indicated to remain and replace with refrigerants that are not CFC based. Replace or adjust existing equipment to accommodate new refrigerant as described in Division 23 Sections.

B. Remove clean-agent fire-extinguishing agents that contain Hydrochlorofluorocarbons (HCFCs) or halons and replace with agent that does not contain HCFCs or halons. See Division 21 Section "Clean-Agent Fire Extinguishing Systems" for additional requirements.

3.2 MEASUREMENT AND VERIFICATION

A. Coordinate with Divisions 2 through 49 for project requirements regarding installation of building level metering equipment to measure energy, water, and electric usage.

3.3 INDOOR-AIR-QUALITY MANAGEMENT

A. Coordinate with Section 01 57 19.11 "Indoor Air Quality Management" for managing indoor air quality during construction and prior to occupancy.

END OF SECTION 01 81 13

SECTION 01 9114 – TOTAL BUILDING COMMISSIONING

PART 1 - GENERAL

1.1 SUMMARY

A. Section Includes:

1. General requirements for coordinating and scheduling commissioning.
2. Commissioning meetings.
3. Commissioning reports.
4. Use of test equipment, instrumentation, and tools for commissioning.
5. Construction checklists, including, but not limited to, installation checks, startup, and performance tests.
6. Commissioning tests.
7. Adjusting, verifying, and documenting identified systems and assemblies.

B. The work included under this section includes a complete and thorough investigation of equipment and systems indicated in Part 3 of this section. In order to ensure proper installation and operation of all components and systems the contractor shall perform commissioning as described herein to accomplish the tasks, and goals of commissioning. Systems to be evaluated include but are not limited to the following:

1. HVAC components and equipment.
2. HVAC system: interaction of heating, and comfort delivery systems.
3. Building Envelope (walls, roof, windows, infiltration, etc.)
4. Life Safety Systems (Fire Alarm & Suppression)
5. Electrical Systems (Access Control/ Security Systems)

C. Building commissioning activities and documentation are described in the following reference material, ASHRAE Guideline 0-2005, The Commissioning Process, and National Institute of Building Sciences (NIBS) Guidelines.

D. The NPS personnel and Architect/Engineer, are not responsible for construction means, methods, job safety, or management function related to commissioning on the job site.

E. Related Sections:

1. 01 31 00 – Project Management & Coordination
2. 01 33 23 – Submittal Procedures
3. 01 40 00 - Quality Requirements
4. 01 57 19.11 - Indoor Air Quality (IAQ) Management
5. 01 57 19.12 – Noise & Acoustics Management
6. 01 78 23 - Operation & Maintenance Data
7. 01 81 13 – Sustainable Design, Close-Out Documentation

8. 01 79 00 – Demonstration and Training

1.2 DEFINITIONS

A. Acceptance Criteria: Threshold of acceptable work quality or performance specified for a commissioning activity.

B. Basis-of-Design Document: A document prepared by the Designer that records concepts, calculations, decisions, and product selections used to comply with Owner's Project Requirements and to suit applicable regulatory requirements, standards, and guidelines.

C. Total Building Commissioning (TBC): A quality-focused process for verifying and documenting that the facility and all of its systems and assemblies are planned, designed, installed, and tested to comply with Owner's Project Requirements. The requirements specified here are limited to the construction phase commissioning activities.

D. Construction Checklist: A form used by the contractor to verify that appropriate components are on site, ready for installation, correctly installed and functional.

E. Commissioning Authority: (CxA) The person or firm responsible for the delivery of the commissioning process.

F. Contractor's Commissioning Representative: (CCxR) The Contractor's designated individual to coordinate, manage, and execute the commissioning processes of the contracting organizations.

G. Commissioning Plan (CCxP): A plan that provides the structure, schedule and coordination planning for the commissioning process proposed specifically for this project. The CCxP includes Personnel, activities, and a description of the Infrastructure, and a list of all instruments and logging devices that will be used during Commissioning.

H. Deficiency: A condition in the installation or function of a component, piece of equipment or system that is not in compliance with the Contract Documents, does not perform properly or is not complying with the Basis of Design.

I. Functional Performance Test (FPT): Test of the dynamic function and operation of equipment and systems using manual (direct observation) or monitoring methods. Functional testing is the dynamic testing of systems (rather than just components) under full operation (e.g., the chiller pump is tested interactively with the chiller functions to see if the pump ramps up and down to maintain the differential pressure setpoint). Systems are tested under various modes, such as during low cooling or heating loads, high loads, component failures, unoccupied, varying outside air temperatures, fire alarm, power failure, etc. The systems are run through all the control system's sequences of operation and components are verified to be responding as the sequences state. Traditional air or water test and balancing (TAB) is not functional performance testing, in the commissioning sense of the word. TAB's primary work is setting up the system flows and pressures as specified, while functional testing is verifying that which has already been set up. The CCxR develops the sequentially written functional test procedure forms, and oversees and documents the actual testing, which is performed by the installing contractor or vendor. The CCxR creates worksheets from these forms which include procedures required to accommodate actual equipment, means and methods used in the project. Functional Performance Tests are performed after pre-functional checklists and startup is complete.

J. Manual Test: Using hand-held instruments, control system readouts or direct observation to verify performance (contrasted to analyzing electronically monitored data taken over time to make the "observation").

K. Monitoring: The recording of parameters (flow, current, status, pressure, etc.) of equipment operation using dataloggers or the trending capabilities of control systems.

L. Owner's Project Requirements: A document originated by the Designer that details the functional requirements of a project and the expectations of how it will be used and operated, including project goals, measurable performance criteria, cost considerations, benchmarks, success criteria, and supporting information. This document is updated, with input from the COR as required as the project is finished.

M. Pre-functional Checklist: A list of items to inspect and elementary component tests to conduct to verify proper installation of equipment. Pre-functional checklists are primarily static inspections and procedures to prepare the equipment or system for initial operation (e.g., belt tension, oil levels ok, labels affixed, gages in place, sensors calibrated, etc.). However, some pre-functional checklist items entail simple testing of the function of a component, a piece of equipment or system (such as measuring the voltage imbalance on a three-phase pump motor of a chiller system). The word "pre-functional" refers to "before" functional testing. Pre-functional checklists augment and are combined with the equipment manufacturer's start-up checklist.

N. Seasonal Performance Tests: Functional Performance Tests that are deferred until the system(s) will experience seasonal conditions closer to their design conditions.

O. Systems Manual: A system focused composite document that includes the operational manual, maintenance manual, and additional information of use to the Government during the Occupancy and Operation Phase.

1.3 COMMISSIONING TEAM

A. Members Appointed by Contractor(s): Individuals, each having the authority to act on behalf of the entity he or she represents, explicitly organized to implement the commissioning process through coordinated action.

1. CCxR, -The Contractor's Commissioning Representative. The CCxR shall be approved by the Contracting Officer (CO) and satisfy as many of the following requirements as possible:

a. Certified in Commissioning by a nationally accredited organization (i.e. Associated Air Balance Council (AABC), Association of Energy Engineers (AEE), Building Commissioning Association (BCA), and National Environmental Balancing Bureau (NEBB)).
b. Acted as the principal Commissioning Authority where the total building commissioning approach (including building envelope) was used for at least three projects of comparable size, type, and scope.
c. Technical training in Mechanical, Electrical, and/or fire protection engineering
d. Past commissioning experience.
e. Knowledge of national codes.
f. Experience in energy-efficient design and control strategy optimization.

2. CQC Supervisor – Contractor's quality control supervisor
3. Other Representatives - May include Project superintendents, installers, suppliers, and specialists.

B. Members Appointed by Contracting Officer (CO):

1. Representatives of the facility user and operation and maintenance personnel.
2. Architect and engineering design professionals.

1.4 CONTRACTOR'S RESPONSIBILITIES

A. **Contractor** shall assign representatives with expertise and authority to act on its behalf and shall schedule them to participate in and perform commissioning process activities including, but not limited to, the following:

1. Perform commissioning tests, as required by the technical specifications. Evaluate performance deficiencies identified in test reports and, in collaboration with entity responsible for system and equipment installation, recommend corrective action.
2. Record and resolve commissioning issues.
3. Attend commissioning team meetings held on a **monthly** basis.
4. Integrate and coordinate commissioning process activities with the overall project schedule.
5. Review the Construction Checklist attached at the end of this specification section.
6. Complete **electronic** construction checklists as contract work is completed and provide to the COR on a **weekly** basis.
7. Complete commissioning process test procedures.
8. Provide maintenance orientation and inspection for systems, assemblies, equipment, and components based on contract requirements.
9. Provide Commissioning Plan and documentation for final commissioning documentation.
10. Provide measuring instruments and logging devices to record test data, and provide data acquisition equipment to record data for the complete range of testing for the required test period.

1.5 COMMISSIONING DOCUMENTATION

A. Provide the following information:

1. Review of systems manual, submittals, documents, and other commissioning reports.
2. Identification of installed systems, assemblies, equipment, and components including design changes that occurred during the construction phase.
3. Commissioning Plan including Process activities and schedule for completing construction checklists and manufacturer's pre-start and startup checklists for systems, assemblies, equipment, and components to be verified and tested.
4. Certificate of readiness certifying that systems, subsystems, equipment, and associated controls are ready for testing.

5. Test and inspection reports and certificates.
6. Corrective action documents.
7. Testing, adjusting, and balancing reports.

1.6 SUBMITTALS

A. Two-week look-ahead schedules: A schedule showing the next two weeks of commissioning related construction activity to include completion dates for each element of commissioning documentation for each major system or subsystem as identified in 1.1.B.

B. Certificates of readiness.

C. Contractor's Commissioning Representative Qualifications.

D. Commissioning Plan: Submit within 30 calendar days of notice to proceed.

1. Update as necessary during the work to reflect the progress on the components and systems.

E. Pre functional checklists.

F. Owner's project requirements.

G. Functional performance test forms: Submit minimum 30 calendar days prior to testing.

H. List of test instrumentation, equipment, and monitoring devices. Include the following information:

1. Make, model, serial number, and application for each instrument, equipment, and monitoring device.
2. Brief description of intended use.
3. Calibration record showing the following:

a. Calibration agency, including name and contact information.
b. Last date of calibration.
c. Range of values for which calibration is valid.
d. Certification of accuracy.
e. N.I.S.T. traceability certification for calibration equipment.
f. Due date of the next calibration.

I. Deficiency Report and Resolution Record: Document items of non-compliance in materials, installation or operation. Document the results from start-up/pre-functional checklists, functional performance testing, and short-term diagnostic monitoring. Include details of the components or systems found to be non-compliant with the drawings and specifications. Identify adjustments and alterations required to correct the system operation, and identify who is responsible for making the corrective changes.

1. Update as necessary during the work to reflect the progress on the components and systems. Submit updated versions monthly.

J. Closeout Documentation

1. Closeout documents for commissioned equipment and systems shall be submitted prior to the functional performance testing. These include, but are not necessarily limited to:

   a. Record Documents and Drawings
   b. Start-up certificates for all commissioned equipment with start-up requirements.
   c. Systems Manual
   d. Include TAB, startup, and Control System check-out reports.

   O&M Submittals (refer to requirements of technical specifications):

   e. Training plan: Training plan shall include the following for each training session:

      1) Dates, start and finish times, and locations;
      2) Outline of the information to be presented;
      3) Names and qualifications of the presenters;
      4) List of texts and other materials required to support training.

PART 2 - PRODUCTS

2.1 TEST EQUIPMENT

A. Instrumentation shall meet the following standards:

   1. Be of sufficient quality and accuracy to test and measure system performance within the tolerances required to determine adequate performance.
   2. Be calibrated on the manufacturer's recommended intervals with calibration tags permanently affixed to the instrument being used.
   3. Be maintained in good repair and operation condition throughout the duration of use on this project.

B. All standard testing equipment required to perform startup and initial checkout and required functional performance testing shall be provided by the Contractor for the equipment being tested.

C. All required commissioning equipment (sensors, transducers, data loggers, etc.) not integral to the systems or equipment installed will be provided by the Contractors Commissioning Representative, and shall not become the property of the Government.

2.2 PRE FUNCTIONAL CHECKLIST:

A. Prepare pre functional checklists for all equipment and systems to be commissioned.

B. The pre functional checklists shall be complementary to the Commissioning Plan and Commissioning Schedule

2.3 FUNCTIONAL TEST PROCEDURE FORMS: Prepare functional test procedure forms for each piece of equipment and each system to be commissioned.

2.4 FUNCTIONAL PERFORMANCE WORKSHEETS:

A. Prepare Functional Performance worksheets, consisting of the test procedures and expected results of the testing.

2.5 REPORT FORMAT AND ORGANIZATION

A. General Format and Organization:

1. Bind report in three-ring binders.
2. Label the front cover and spine of each binder with the report title, volume number, project name, Contractor's name, and date of report.
3. Record report on compact disk.
4. Electronic Data: Portable document format (PDF); a single file with outline-organized bookmarks for major and minor tabs and tab contents itemized for specific reports.

B. Commissioning Report:

1. Include a table of contents and an index to each test.
2. Include major tabs for each Specification Section.
3. Include minor tabs for each test.
4. Within each minor tab, include the following:

a. Test specification.
b. Pre-startup reports.
c. Approved test procedures.
d. Test data forms, completed and signed.
e. Commissioning issue reports, showing resolution of issues, and documentation related to resolution of issues pertaining to a single test. Group data forms, commissioning issue reports showing resolution of issues, and documentation related to resolution of issues for each test repetition together within the minor tab, in reverse chronological order (most recent on top).

PART 3 - EXECUTION

3.1 COMMISSIONING PROCESS

A. The following activities outline the general commissioning tasks (requiring development, execution, etc.) and order in which they occur.

1. Commissioning Scoping Meeting.
2. Finalize Owner’s Project Requirements.
3. Commissioning Plan.

4. Prepare pre functional checklists.
5. Prepare functional performance worksheets.
6. Perform Start-Up/Pre-Functional Checks in accordance with manufacturer's recommendations and pre-functional checklists.
7. Functional Performance Testing in accordance with functional performance worksheets.
8. Deficiency Report and Resolution Record.
9. Operation and Maintenance Documentation.
10. Operations and Maintenance Training.
11. Deferred testing

3.2 TOTAL BUILDING COMMISSIONING REQUIREMENTS (TBC)

A. TBC during the construction, acceptance, and warranty phases is intended to achieve the following specific objectives:

1. Verify that the systems and equipment meet the Owner's Project Requirements
2. Verify that equipment is what was submitted and approved.
3. Verify and document that equipment is installed and started per manufacturer's recommendations, industry accepted minimum standards, and the Contract Documents.
4. Verify and document that equipment and systems receive complete operational checkout by installing contractors.
5. Verify and document equipment capacity and system efficiency.
6. Verify the performance of the building envelope. Document testing and conformance to the Contract Documents.
7. Verify the completeness of operations and maintenance materials.
8. Ensure that the Governments operating personnel are adequately trained on the operation and maintenance of building equipment.

3.3 COMMISSIONING SCOPING MEETING

A. Commissioning Scoping Meeting:

1. Schedule, coordinate, and facilitate a scoping meeting.
2. Review each building system to be commissioned, including its intended operation, commissioning requirements, and completion and start-up schedules.
3. Establish the scope of work, tasks, schedules, deliverables, and responsibilities for implementation of the Commissioning Plan.
4. Attendance: Commissioning Team members.

3.4 COMMISSIONING PLAN

A. Commissioning Plan: Develop a commissioning plan to identify how commissioning activities will be integrated into general construction and trade activities. The commissioning plan shall identify how commissioning responsibilities are distributed. The intent of this plan is to evoke

questions, expose issues, and resolve issues with input from the entire commissioning team early in construction.

1. Identify who will be responsible for producing the various procedures, reports, CO notifications and forms.
2. Include the commissioning tasks and activities in the overall project schedule. Tag individual activities so they can be filtered at a later date.
3. List and describe each test/acceptance procedure, including the acceptance criteria.

3.5 START-UP/PRE-FUNCTIONAL CHECKLISTS

A. Start-Up/Pre-Functional Checklists: Complete pre-functional checklists prior to start up. Checklist shall help verify that the systems are complete and operational, so that the functional performance testing can be scheduled.

1. Verify equipment installed is what was approved on the Submittal.
2. Manufacturer's start-up checklists and other technical documentation guidelines may be used as the basis for pre-functional checklists.

3.6 FUNCTIONAL PERFORMANCE TESTING

A. Functional Performance Testing: Test procedures fully describe system configuration and steps required for each test.

1. Test Methods: Functional performance testing and verification may be achieved by direct manipulation of system inputs (i.e. heating or cooling sensors), manipulation of system inputs with the building automation system (i.e. software override of sensor inputs), trend logs of system inputs and outputs using the building automation system, or short-term monitoring of system inputs and outputs using stand alone data loggers. A combination of methods may be required to completely test the complete sequence of operations. The CCxR shall determine which method or combination of methods is most appropriate.
2. Setup: Each test procedure shall be performed under conditions that simulate normal operating conditions as closely as possible. Where equipment requires integral safety devices to stop/prevent equipment operation unless minimum safety standards or conditions are met, functional performance test procedures shall demonstrate the actual performance of safety shutoffs in real or closely-simulated conditions of failure.
3. Sampling: Multiple identical pieces of non-life-safety or non-critical equipment may be functionally tested using a sampling strategy. If, after three attempts at testing the specified sample percentage, failures are still present, then all remaining units shall be tested at the Contractors' expense.

B. Prepare functional performance test procedure forms to accommodate actual installed equipment and systems.

C. Coordinate, execute and record the results of the functional performance testing.

1. Coordinate retesting as necessary until satisfactory performance is verified.

2. Verify the intended operation of individual components and system interactions under various conditions and modes of operation.

3.7 DEFICIENCY REPORT AND RESOLUTION RECORD

A. Deficiency Report and Resolution Record: Document items of non-compliance in materials, installation or operation.

B. Non-Conformance. Non-conformance and deficiencies observed shall be addressed immediately. Notify responsible parties and provide recommended actions to correct deficiencies.

1. Corrections of minor deficiencies identified may be made during the tests at the discretion of the CCxR. In such cases the deficiency and resolution shall be documented on the procedure form.
2. For identified deficiencies:

a. If there is no dispute on the deficiency and the responsibility to correct it:

1) The CCxR documents the deficiency and the adjustments or alterations required to correct it. The contractor corrects the deficiency and notifies the CCxR that the equipment is ready to be retested.
2) The CCxR reschedules the test and the test is repeated until satisfactory performance is achieved.

b. If there is a dispute about a deficiency or who is responsible:

1) The deficiency is documented CCxR on the non-compliance form.
2) Resolutions are made at the lowest management level possible. Additional parties are brought into the discussions as needed. Contractor shall have responsibility for resolving construction deficiencies. If a design revision is deemed necessary and approved by the CO, Architect/Engineer shall have responsibility for providing design revision. The CCxR documents the resolution process.
3) Once the interpretation and resolution have been decided, the appropriate party corrects the deficiency and notifies the CCxR that the equipment is ready to be retested. The CCxR reschedules the test and the test is repeated until satisfactory performance is achieved.

3. Cost of Retesting: Costs for retesting shall be charged to the Contractor.

3.8 OPERATIONS AND MAINTENANCE TRAINING

A. Training: Develop a Training Plan. Coordinate and execute the training programs with the CxA.

1. Stress and enhance the importance of system interactions, troubleshooting, and long-term preventive maintenance and operation programs.

3.9 DEFERRED TESTING

A. Unforeseen Deferred Tests: If a test cannot be completed due to the building structure, required occupancy condition, or other deficiency, the functional testing may be delayed upon recommendation of the CCxR and the approval of the Contracting Officer. These tests are conducted in the same manner as the seasonal tests, as soon as possible.

B. Seasonal Testing;

1. Schedule, coordinate, execute, and document additional testing for seasonal variation in operations and control strategies during the appropriate season to verify performance of the HVAC system and controls. Complete testing during the warranty period to fully test all sequences of operation.
2. Update O&M manuals and Project Record Drawings as necessary due to the testing.

3.10 EQUIPMENT & SYSTEM SCHEDULE

A. Commissioned Equipment and Systems List: The following is a list of systems and equipment to be commissioned organized by system. It also includes the percentage of each category that will undergo testing. The intent is to provide an overall summary of commissioned equipment and systems, and not a comprehensive list. Refer to applicable specification sections for more information.

COMMISSIONED EQUIPMENT AND SYSTEMS LIST			
SYSTEM	**EQUIPMENT**	**CC**	**FPT**
Plumbing	**Water Heaters**		
Plumbing	In-line circulation Pumps		
Plumbing	Thermal Mixing Valves		
Mechanical	Exhaust Fans and controls		
Mechanical	Heating-Only Make-up Air Unit and Controls		
Mechanical	Electric heating Units		
Mechanical	Air Curtains		

END OF SECTION 01 9114