EXISTING CONDITIONS

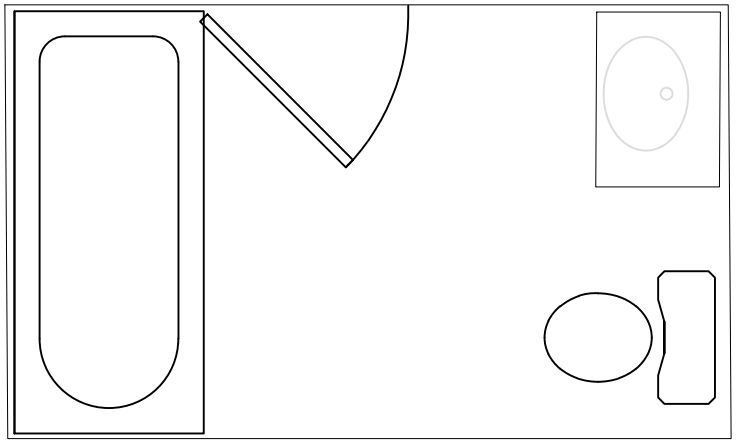

ADA PROPOSAL

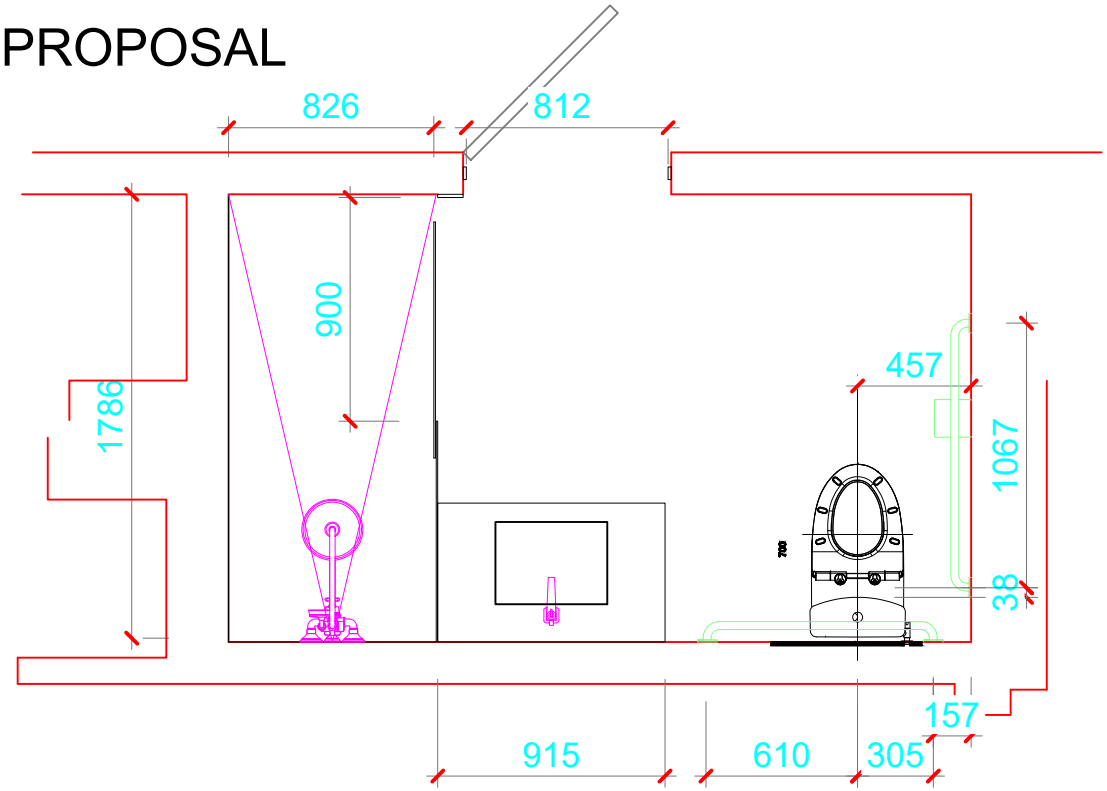

United States Department of State
OFFICE OF FOREIGN BUILDINGS OPERATIONS
Washington, D.C.

UNITED STATES EMBASSY
MADRID, SPAIN

All documents, are to be controlled and disseminated on a need-to-know basis. Reproduction and distribution is prohibited without express approval of the U.S. Government. The Contractor shall mark all design and construction documents as follows

WARNING

This document is the property of the United States Government. Further reproduction and/or distribution is prohibited without the express written approval OB

U.S. EMBASSY
Calle Serrano, 75
28006 Madrid, Spain

REV5	DESCRIPTION:	DATE 1
REV4	DESCRIPTION:	DATE 4
REV3	DESCRIPTION:	DATE 3
REV2	DESCRIPTION:	DATE 2
REV1	DESCRIPTION:	DATE 1
Rev Number	Description	Date

Revisions

PROPERM | PROPERSE

Drawing Title

ADA.CMR.BATHROOM

Drawing Number | Scale: SCALE

Date: DATE G
Drawn By: DRAWN
Checked By: CHECKED
Project Number
Sheet Number: SHEET
Of Sheets
Classification: SBU

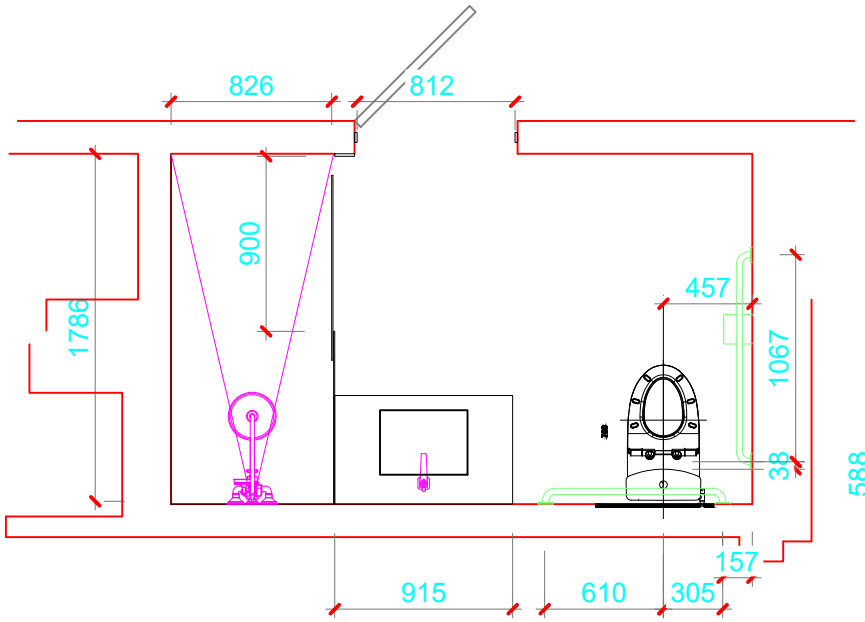

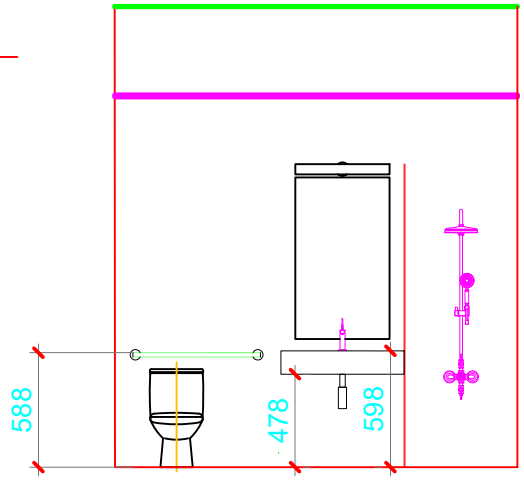

ELEVATION

Components

Code	Component Name	QTY	P&I	W x D x H (in)	W x D x H (mm)	AFF (in / mm)	CSI	Std Spec
CW005	Cabinet, Sink Base, Accessible	1	CFCI	36 x 24 x 21.5	914 x 610 x 546	9 / 229 (bottom)	06	■
CW009	Countertop with Backsplash	1	CFCI	36 x 25 x 1.5	914 x 635 x 38	32 / 813 (top)	06	■
FN182	Medicine Cabinet, Recessed	1	CFCI	24 x 4 x 30	610 x 102 x 762	48 / 1219 (bottom)	10	
FN183	Shower Seat, Accessible	1	CFCI	24 x 28 x 12	610 x 711 x 305	5 / 127 (bottom)	12	
PL001	Shower Head, Hand Held Sprayer	1	CFCI			36 / 914 (bottom)	22	■
PL007	Faucet, Gooseneck (in PL036)	1	CFCI				22	■
PL015	Drain, Floor	1	CFCI	4 x 4 x .5	102 x 102 x 13		22	
PL036	Sink, Lavatory, Countertop	1	CFCI	21 x 14	533 x 356	32 / 813 (bottom)	22	■
PL037	Toilet, Two Piece	1	CFCI	20 x 30.5 x 30	508 x 775 x 762		22	■
SQ004	Hook, Garment and Towel	1	CFCI	1.5 x 2 x 2.5	38 x 51 x 64	72.5 / 1842 (center)	10	
SQ052	Grab Bar Horizontal	1	CFCI	30 x 4 x 1.5	762 x 102 x 38	33 / 838 (bottom)	10	
SQ052	Grab Bar Horizontal	1	CFCI	42.2 x 4 x 1.5	1072 x 102 x 38	33 / 838 (bottom)	10	
SQ052	Grab Bar Horizontal	1	CFCI	46.6 x 4 x 1.5	1184 x 102 x 38	33 / 838 (bottom)	10	
SQ052	Grab Bar Horizontal	1	CFCI	39.4 x 4 x 1.5	1001 x 102 x 38	33 / 838 (bottom)	10	
SQ128	Dispenser, Toilet Paper	1	CFCI	6 x 6 x 6	152 x 152 x 152	18 / 457 (bottom)	10	
SQ129	Towel Ring	1	CFCI	8 x 2 x 8.5	203 x 51 x 216	62.5 / 1588 (center)	10	

United States Department of State
OFFICE OF FOREIGN BUILDINGS OPERATIONS
Washington, D.C.

UNITED STATES EMBASSY
MADRID, SPAIN

All dimensions are to be verified and coordinated on a not-to-scale basis. Technical data and information contained herein is the property of the U.S. Government. The Contractor shall not alter or copy and distribution elements or "Sets" except for the purpose of the Work. Drawings, data, materials and/or information shall be kept under control at all times.

Jim Brown
Job Captain
Jones Studio, Inc.

Rev. Number	Description	Date
REV. 1	DESCRIPTION	DATE 1
REV. 2	DESCRIPTION	DATE 2
REV. 3	DESCRIPTION	DATE 3
REV. 4	DESCRIPTION	DATE 4
REV. 5	DESCRIPTION	DATE 5

Revisions

Acronym: Number:

Drawing Title: WORKPLAN

Drawing Number: Scale: SCALE

Date: DATE 2 | Sheet Number: SHEET

Drawn By: DRAWN

Checked By: CHECKED

Project Number: | Of Sheets

Classification: SBU

DOMESTIC AND HOT WATER

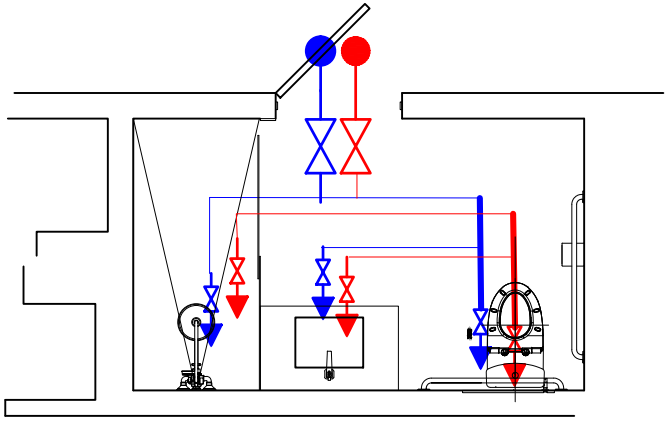

DRAINAGE

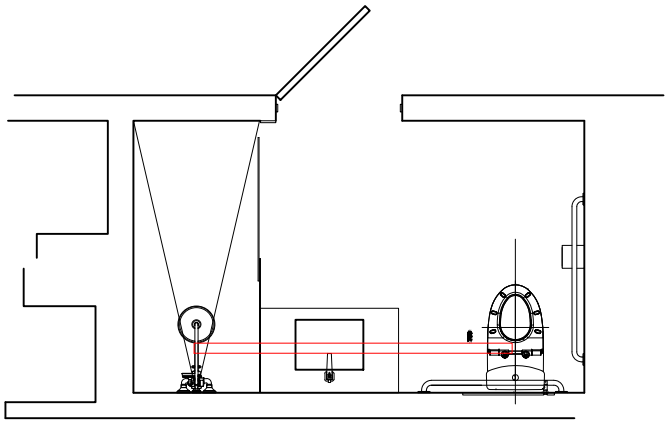

ELECTRICAL

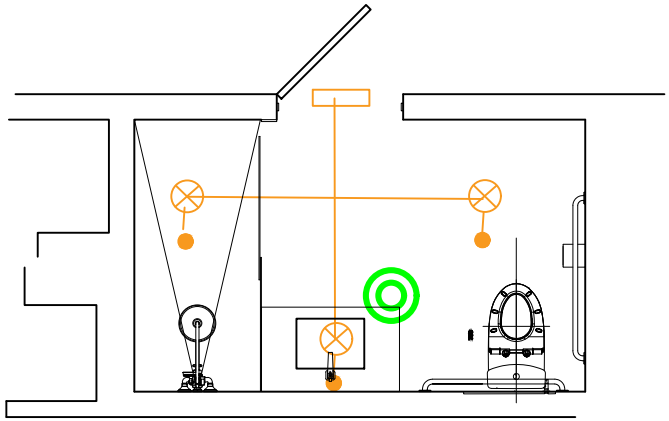

⊗	CEILING LIGHT POINT
●	EXTRACTION DIFFUSER
●	PRESENCE DETECTOR
▭	EMERGENCY LIGHTS
⊘	FIRE ALARM

United States Department of State
OFFICE OF FOREIGN BUILDINGS OPERATIONS
Washington, D.C.

UNITED STATES EMBASSY
MADRID, SPAIN

All dimensions are to be verified on drawings prior to any work. Reproduction and distribution of this document without written permission of the U.S. Government, the Contractor and their of design and construction documents is forbidden.
WARNING
This document is the property of the United States Government. Further reproduction and/or distribution is prohibited unless the express written approval of
U.S. DESIGN
Alex Garcia, PE
28006 Madrid, Spain

REV.	DESCRIPTION	DATE
REV.	DESCRIPTION	DATE
REV.	DESCRIPTION	DATE
REV.	DESCRIPTION	DATE
REV.	DESCRIPTION	DATE

Rev Number	Description	Date

Revisions

FACIPGPM	FACIPCADD

Drawing Title: INSTALLATION

Drawing Number | Scale: SCALE

Date: DATE G	Sheet Number: SHEET	
Drawn By: DRAWN		
Checked By: CHECKED		
Project Number	Of Sheets	
Classification: SBU		