SOLICITATION/CONTRACT/ORDER FOR COMMERCIAL PRODUCTS AND COMMERCIAL SERVICES

NOTE: OFFEROR TO COMPLETE BLOCKS 12, 17, 23, 24, AND 30.

1. REQUISITION NUMBER

2. CONTRACT NUMBER	3. AWARD/EFFECTIVE DATE	4. ORDER NUMBER	5. SOLICITATION NUMBER	6. SOLICITATION ISSUE DATE
			N6264926QB058	16 Jun 2026

7. FOR SOLICITATION INFORMATION CALL:	a. NAME	b. TELEPHONE NUMBER *(No collect calls)*	8. OFFER DUE DATE/ LOCAL TIME
	Maya Ichikawa	315-243-7443	29 Jun 2026 10:00 AM

9. ISSUED BY CODE N62649

NAVSUP FLT LOG CTR YOKOSUKA
PSC 473 BOX 11, FPO AP 96349-1500
FPO, AP 96349-1500
UNITED STATES
Maya Ichikawa, Email: maya.ichikawa.ln@us.navy.mil Telephone: 315-243-7443

10. THIS ACQUISITION IS [X] UNRESTRICTED OR [ ] SET ASIDE: ____ % FOR:

[ ] SMALL BUSINESS
[ ] HUBZONE SMALL BUSINESS
[ ] SERVICE-DISABLED VETERAN-OWNED SMALL BUSINESS (SDVOSB)
[ ] WOMEN-OWNED SMALL BUSINESS (WOSB)
[ ] ECONOMICALLY DISADVANTAGED WOMEN-OWNED SMALL BUSINESS (EDWOSB)
[ ] 8(A)

NORTH AMERICAN INDUSTRY CLASSIFICATION STANDARD (NAICS): 332919

SIZE STANDARD:

11. DELIVERY FOR FREE ON BOARD (FOB) DESTINATION UNLESS BLOCK IS MARKED
[X] SEE SCHEDULE

12. DISCOUNT TERMS

[ ] 13a. THIS CONTRACT IS A RATED ORDER UNDER THE DEFENSE PRIORITIES AND ALLOCATIONS SYSTEM - DPAS (15 CFR 700)

13b. RATING

14. METHOD OF SOLICITATION
[X] REQUEST FOR QUOTE (RFQ) [ ] INVITATION FOR BID (IFB) [ ] REQUEST FOR PROPOSAL (RFP)

15. DELIVER TO CODE

See Continuation

16. ADMINISTERED BY CODE

17a. CONTRACTOR/ OFFEROR CODE FACILITY CODE

TELEPHONE NUMBER

[ ] 17b. CHECK IF REMITTANCE IS DIFFERENT AND PUT SUCH ADDRESS IN OFFER

18a. PAYMENT WILL BE MADE BY CODE

18b. SUBMIT INVOICES TO ADDRESS SHOWN IN BLOCK 18a UNLESS BLOCK BELOW IS CHECKED [ ] SEE ADDENDUM

19. ITEM NUMBER	20. SCHEDULE OF SUPPLIES/SERVICES	21. QUANTITY	22. UNIT	23. UNIT PRICE	24. AMOUNT
	See Continuation *(Use Reverse and/or Attach Additional Sheets as Necessary)*				

25. ACCOUNTING AND APPROPRIATION DATA
See Continuation

26. TOTAL AWARD AMOUNT *(For Government Use Only)*

[X] 27a. SOLICITATION INCORPORATES BY REFERENCE (FEDERAL ACQUISITION REGULATION) FAR 52.212-1, 52.212-4. FAR 52.212-3 AND 52.212-5 ARE ATTACHED. ADDENDA [X] ARE [ ] ARE NOT ATTACHED

[ ] 27b. CONTRACT/PURCHASE ORDER INCORPORATES BY REFERENCE FAR 52.212-4. FAR 52.212-5 IS ATTACHED. ADDENDA [ ] ARE [ ] ARE NOT ATTACHED

[X] 28. CONTRACTOR IS REQUIRED TO SIGN THIS DOCUMENT AND RETURN 1 COPIES TO ISSUING OFFICE. CONTRACTOR AGREES TO FURNISH AND DELIVER ALL ITEMS SET FORTH OR OTHERWISE IDENTIFIED ABOVE AND ON ANY ADDITIONAL SHEETS SUBJECT TO THE TERMS AND CONDITIONS SPECIFIED

[ ] 29. AWARD OF CONTRACT: REFERENCE ____ OFFER DATED ____. YOUR OFFER ON SOLICITATION (BLOCK 5), INCLUDING ANY ADDITIONS OR CHANGES WHICH ARE SET FORTH HEREIN, IS ACCEPTED AS TO ITEMS: See Continuat

30a. SIGNATURE OF OFFEROR/CONTRACTOR

31a. UNITED STATES OF AMERICA *(SIGNATURE OF CONTRACTING OFFICER)*

30b. NAME AND TITLE OF SIGNER *(Type or print)* 30c. DATE SIGNED

31b. NAME OF CONTRACTING OFFICER *(Type or print)* 31c. DATE SIGNED

Solicitation/Contract Form Continuation

Fire Hose Manifold

Continuation of Supplies or Services and Prices/Costs

Additional Information/Notes

Item	Supplies/Service	Quantity	Unit	Unit Price	Amount
0001	FIRE Hose Manifold Part Number: Type-A *This is not Manufacture Parts Number Fire Hose Manifold, Type-A, Tube, Metallic, 3" NPS, Tube, Metallic, 2.5" NPS, Tube, Metallic, OD: 2.875", WALL: 0.187", Adapter, 2.5" NH, MAT'L: Stainless (SUS316) DIMENSION: +/- 5% *** EQUIVALENT ITEM IS ACCEPTABLE *** See Enclosures (1) through (12) at the end of this RFQ for detailed drawings. ERP PR Number: 1301375401 Reference JML Number: N6275861477816 Pricing Arrangement: Firm Fixed Price	30	Each		
0002	Fire Hose Manifold Part Number: Type-B *This is not Manufacture Parts Number Fire Hose Manifold, Type-B, Tube, Metallic, 3" NPS, Tube, Metallic, 2.5" NPS, Tube, Metallic, OD: 2.875", WALL: 0.187", Adapter, 2.5" NH, MAT'L: Stainless (SUS316) DIMENSION: +/- 5% *** EQUIVALENT ITEM IS ACCEPTABLE *** See Enclosures (1) through (12) at the end of this RFQ for detailed drawings. ERP PR Number: 1301375402 REFERENCE JML Number: N6275861477817 Pricing Arrangement: Firm Fixed Price	30	Each		

Continuation of Description

Requirements
Fire Hose Manifold for X-99, SRF-JRMC

Continuation of Packaging and Marking

Continuation of Inspection and Acceptance

Overall Contract Inspection/Acceptance Locations

0001	Inspection and Acceptance Location Both Destination Instructions: Instructions: The POC or their designated representative shall inspect and accept the service(s) or supply(ies). DoDAAC: N62758 CountryCode: USA SRF AND JRMC YOKOSUKA PSC 473 BOX 8, FPO AP 96349 FPO, AP 96349 UNITED STATES To be determined, (TBD) Email: TBD Telephone: TBD
0002	Inspection and Acceptance Location Both Destination Instructions: Instructions: The POC or their designated representative shall inspect and accept the service(s) or supply(ies). DoDAAC: N62758 CountryCode: USA SRF AND JRMC YOKOSUKA PSC 473 BOX 8, FPO AP 96349 FPO, AP 96349 UNITED STATES To be determined, (TBD) Email: TBD Telephone: TBD

Continuation of Deliveries or Performance

Line Item	Delivery Schedule	Quantity	Address and POC
0001	Delivery On Or Before Delivery Date 30 Sep 2026	30 Each	Ship To DoDAAC: N62758 CountryCode: USA SRF AND JRMC YOKOSUKA PSC 473 BOX 8, FPO AP 96349 FPO, AP 96349 UNITED STATES To be determined, (TBD) Email: TBD Telephone: TBD
0002	Delivery On Or Before Delivery Date 30 Sep 2026	30 Each	Ship To DoDAAC: N62758 CountryCode: USA SRF AND JRMC YOKOSUKA PSC 473 BOX 8, FPO AP 96349 FPO, AP 96349 UNITED STATES To be determined, (TBD) Email: TBD Telephone: TBD

Continuation of Accounting and Appropriation Data

Contract Clauses

FAR Clauses Incorporated by Reference

Number	Title	Effective Date	Alternate/ Deviation	Variation Effective Date
52.203-19	Prohibition on Requiring Certain Internal Confidentiality Agreements or Statements.	Dec 2016		
52.222-19	Child Labor-Cooperation with Authorities and Remedies. (Deviation 2026-O0038)	Feb 2026		
52.226-8	Encouraging Contractor Policies to Ban Text Messaging While Driving.	Apr 2024		
52.233-3	Protest after Award. (Deviation 2026-O0038)	Jan 2026		
52.233-4	Applicable Law for Breach of Contract Claim. (Deviation 2026-O0038)	Jan 2026		
52.204-13	System for Award Management-Maintenance. (Deviation 2026-O0038)	Jan 2026		
52.212-4	Terms and Conditions-Commercial Products and Commercial Services. (Deviation 2026-O0038)	Jan 2026		

DFARS Clauses Incorporated by Reference

Number	Title	Effective Date	Alternate/ Deviation	Variation Effective Date
252.203-7000	Requirements Relating to Compensation of Former DoD Officials.	Aug 2011		
252.203-7002	Requirement to Inform Employees of Whistleblower Rights.	Nov 2022		
252.223-7008	Prohibition of Hexavalent Chromium.	Dec 2022		
252.225-7056	Prohibition Regarding Business Operations with the Maduro Regime.	Dec 2022		
252.225-7060	Prohibition on Certain Procurements from the Xinjiang Uyghur Autonomous Region.	May 2023		
252.232-7003	Electronic Submission of Payment Requests and Receiving Reports.	Nov 2018		
252.232-7010	Levies on Contract Payments.	Nov 2006		
252.247-7023	Transportation of Supplies by Sea.	Sep 2024		
252.204-7015	Notice of Authorized Disclosure of Information for Litigation Support.	Dec 2022		
252.204-7022	Expediting Contract Closeout.	Apr 2021		

DFARS Clauses Incorporated by Full Text

252.232-7006 Wide Area WorkFlow Payment Instructions. (Dec 2022)

WIDE AREA WORKFLOW PAYMENT INSTRUCTIONS (JAN 2023)

(a) *Definitions.* As used in this clause-

"Department of Defense Activity Address Code (DoDAAC)" is a six position code that uniquely identifies a unit, activity, or organization.

"Document type" means the type of payment request or receiving report available for creation in Wide Area WorkFlow (WAWF).

"Local processing office (LPO)" is the office responsible for payment certification when payment certification is done external to the entitlement system.

"Payment request" and "receiving report" are defined in the clause at 252.232-7003, Electronic Submission of Payment Requests and Receiving Reports.

(b) *Electronic invoicing.* The WAWF system provides the method to electronically process vendor payment requests and receiving reports, as authorized by Defense Federal Acquisition Regulation Supplement (DFARS) 252.232-7003, Electronic Submission of Payment Requests and Receiving Reports.

(c) *WAWF access.* To access WAWF, the Contractor shall-

(1) Have a designated electronic business point of contact in the System for Award Management at https://www.sam.gov; and

(2) Be registered to use WAWF at https://wawf.eb.mil/ following the step-by-step procedures for self-registration available at this web site.

(d) *WAWF training.* The Contractor should follow the training instructions of the WAWF Web-Based Training Course and use the Practice Training Site before submitting payment requests through WAWF. Both can be accessed by selecting the "Web Based Training" link on the WAWF home page at https://wawf.eb.mil/

(e) *WAWF methods of document submission.* Document submissions may be via web entry, Electronic Data Interchange, or File Transfer Protocol.

(f) *WAWF payment instructions.* The Contractor shall use the following information when submitting payment requests and receiving reports in WAWF for this contract or task or delivery order:

(1) *Document type.* The Contractor shall submit payment requests using the following document type(s):

(i) For cost-type line items, including labor-hour or time-and-materials, submit a cost voucher.

(ii) For fixed price line items-

(A) That require shipment of a deliverable, submit the invoice and receiving report specified by the Contracting Officer.

Invoice and Receiving Report (Combo)

(B) For services that do not require shipment of a deliverable, submit either the Invoice 2in1, which meets the requirements for the invoice and receiving report, or the applicable invoice and receiving report, as specified by the Contracting Officer.

Not Applicable (N/A)

(iii) For customary progress payments based on costs incurred, submit a progress payment request.

(iv) For performance based payments, submit a performance based payment request.

(v) For commercial financing, submit a commercial financing request.

(2)) Fast Pay requests are only permitted when Federal Acquisition Regulation (FAR) 52.213-1 is included in the contract.

[Note: The Contractor may use a WAWF "combo" document type to create some combinations of invoice and receiving report in one step.]

(3) *Document routing.* The Contractor shall use the information in the Routing Data Table below only to fill in applicable fields in WAWF when creating payment requests and receiving reports in the system.

Routing Data Table*

Field Name in WAWF	*Data to be entered in WAWF*
Pay Official DoDAAC	TBD
Issue By DoDAAC	TBD
Admin DoDAAC	TBD
Inspect By DoDAAC	TBD
Ship To Code	TBD
Ship From Code	TBD

Mark For Code	TBD
Service Approver (DoDAAC)	TBD
Service Acceptor (DoDAAC)	TBD
Accept at Other DoDAAC	TBD
LPO DoDAAC	TBD
DCAA Auditor DoDAAC	TBD
Other DoDAAC(s)	TBD
*Agency Accounting Identifier(AAI) Number (If applicable)	TBD

"The Contractor shall enter the e-mail address(es) identified below in the "Send Additional E-mail Notifications" field of WAWF once a document is submitted in the system."

(4) *Payment request.* The Contractor shall ensure a payment request includes documentation appropriate to the type of payment request in accordance with the payment clause, contract financing clause, or Federal Acquisition Regulation 52.216-7, Allowable Cost and Payment, as applicable.

(5) *Receiving report.* The Contractor shall ensure a receiving report meets the requirements of DFARS Appendix F.

(g) *WAWF point of contact.*

TBD

(1) The Contractor may obtain clarification regarding invoicing in WAWF from the following contracting activity's WAWF point of contact.

TBD

(2) Contact the WAWF helpdesk at 866-618-5988, if assistance is needed.

(End of clause)

252.211-7003 Item Unique Identification and Valuation. (Dec 2022)

ITEM UNIQUE IDENTIFICATION AND VALUATION (JAN 2023)

(a) *Definitions*. As used in this clause-

"Automatic identification device" means a device, such as a reader or interrogator, used to retrieve data encoded on machine-readable media.

"Concatenated unique item identifier" means-

(1) For items that are serialized within the enterprise identifier, the linking together of the unique identifier data elements in order of the issuing agency code, enterprise identifier, and unique serial number within the enterprise identifier; or

(2) For items that are serialized within the original part, lot, or batch number, the linking together of the unique identifier data elements in order of the issuing agency code; enterprise identifier; original part, lot, or batch number; and serial number within the original part, lot, or batch number.

"Data matrix" means a two-dimensional matrix symbology, which is made up of square or, in some cases, round modules arranged within a perimeter finder pattern and uses the Error Checking and Correction 200 (ECC200) specification found within International Standards Organization (ISO)/International Electrotechnical Commission (IEC) 16022.

"Data qualifier" means a specified character (or string of characters) that immediately precedes a data field that defines the general category or intended use of the data that follows.

"DoD recognized unique identification equivalent" means a unique identification method that is in commercial use and has been recognized by DoD. All DoD recognized unique identification equivalents are listed at *https://www.acq.osd.mil/asda/dpc/ce/ds/unique-id.html*.

"DoD item unique identification" means a system of marking items delivered to DoD with unique item identifiers that have machine-readable data elements to distinguish an item from all other like and unlike items. For items that are serialized within the enterprise identifier, the unique item identifier shall include the data elements of the enterprise identifier and a unique serial number. For items that are serialized within the part, lot, or batch number within the enterprise identifier, the unique item identifier shall include the data elements of the enterprise identifier; the original part, lot, or batch number; and the serial number.

" Enterprise " means the entity (e.g., a manufacturer or vendor) responsible for assigning unique item identifiers to items.

" Enterprise identifier" means a code that is uniquely assigned to an enterprise by an issuing agency.

"Government's unit acquisition cost" means-

(1) For fixed-price type line, subline, or exhibit line items, the unit price identified in the contract at the time of delivery;

(2) For cost-type or undefinitized line, subline, or exhibit line items, the Contractor's estimated fully burdened unit cost to the Government at the time of delivery; and

(3) For items produced under a time-and-materials contract, the Contractor's estimated fully burdened unit cost to the Government at the time of delivery.

"Issuing agency" means an organization responsible for assigning a globally unique identifier to an enterprise, as indicated in the Register of Issuing Agency Codes for ISO/IEC 15459, located at http://www.aimglobal.org/?Reg_Authority15459.

"Issuing agency code" means a code that designates the registration (or controlling) authority for the enterprise identifier.

"Item" means a single hardware article or a single unit formed by a grouping of subassemblies, components, or constituent parts.

" Lot or batch number" means an identifying number assigned by the enterprise to a designated group of items, usually referred to as either a lot or a batch, all of which were manufactured under identical conditions.

"Machine-readable" means an automatic identification technology media, such as bar codes, contact memory buttons, radio frequency identification, or optical memory cards.

"Original part number" means a combination of numbers or letters assigned by the enterprise at item creation to a class of items with the same form, fit, function, and interface.

"Parent item" means the item assembly, intermediate component, or subassembly that has an embedded item with a unique item identifier or DoD recognized unique identification equivalent.

"Serial number within the enterprise identifier" means a combination of numbers, letters, or symbols assigned by the enterprise to an item that provides for the differentiation of that item from any other like and unlike item and is never used again within the enterprise.

"Serial number within the part, lot, or batch number" means a combination of numbers or letters assigned by the enterprise to an item that provides for the differentiation of that item from any other like item within a part, lot, or batch number assignment.

"Serialization within the enterprise identifier" means each item produced is assigned a serial number that is unique among all the tangible items produced by the enterprise and is never used again. The enterprise is responsible for ensuring unique serialization within the enterprise identifier.

"Serialization within the part, lot, or batch number" means each item of a particular part, lot, or batch number is assigned a unique serial number within that part, lot, or batch number assignment. The enterprise is responsible for ensuring unique serialization within the part, lot, or batch number within the enterprise identifier.

"Type designation" means a combination of letters and numerals assigned by the Government to a major end item, assembly or subassembly, as appropriate, to provide a convenient means of differentiating between items having the same basic name and to indicate modifications and changes thereto.

"Unique item identifier" means a set of data elements marked on items that is globally unique and unambiguous. The term includes a concatenated unique item identifier or a DoD recognized unique identification equivalent.

"Unique item identifier type" means a designator to indicate which method of uniquely identifying a part has been used. The current list of accepted unique item identifier types is maintained at *https://www.acq.osd.mil/asda/dpc/ce/ds/unique-id.html*.

(b) The Contractor shall deliver all items under a contract line, subline, or exhibit line item.

(c) *Unique item identifier.*

(1) The Contractor shall provide a unique item identifier for the following:

(i) Delivered items for which the Government's unit acquisition cost is $5,000 or more, except for the following line items:

Contract Line, Subline, or Exhibit Line Item Number	Item Description
All CLINs	____

(ii) Items for which the Government's unit acquisition cost is less than $5,000 that are identified in the Schedule or the following table:

Contract Line, Subline, or Exhibit Line Item Number	Item Description
N/A	____

(iii) Subassemblies, components, and parts embedded within delivered items, items with warranty requirements, DoD serially managed reparables and DoD serially managed nonreparables as specified in Attachment Number ____.

(iv) Any item of special tooling or special test equipment as defined in FAR 2.101 that have been designated for preservation and storage for a Major Defense Acquisition Program as specified in Attachment Number ____.

(v) Any item not included in (i), (ii), (iii), or (iv) for which the contractor creates and marks a unique item identifier for traceability.

(2) The unique item identifier assignment and its component data element combination shall not be duplicated on any other item marked or registered in the DoD Item Unique Identification Registry by the contractor.

(3) The unique item identifier component data elements shall be marked on an item using two dimensional data matrix symbology that complies with ISO/IEC International Standard 16022, Information technology - International symbology specification - Data matrix; ECC200 data matrix specification.

(4) *Data syntax and semantics of unique item identifiers.* The Contractor shall ensure that-

(i) The data elements (except issuing agency code) of the unique item identifier are encoded within the data matrix symbol that is marked on the item using one of the following three types of data qualifiers, as determined by the Contractor:

(A) Application Identifiers (AIs) (Format Indicator 05 of ISO/IEC International Standard 15434), in accordance with ISO/IEC International Standard 15418, Information Technology - EAN/UCC Application Identifiers and Fact Data Identifiers and Maintenance and ANSI MH 10.8.2 Data Identifier and Application Identifier Standard.

(B) Data Identifiers (DIs) (Format Indicator 06 of ISO/IEC International Standard 15434), in accordance with ISO/IEC International Standard 15418, Information Technology - EAN/UCC Application Identifiers and Fact Data Identifiers and Maintenance and ANSI MH 10.8.2 Data Identifier and Application Identifier Standard.

(C) Text Element Identifiers (TEIs) (Format Indicator 12 of ISO/IEC International Standard 15434), in accordance with the Air Transport Association Common Support Data Dictionary; and

(ii) The encoded data elements of the unique item identifier conform to the transfer structure, syntax, and coding of messages and data formats specified for Format Indicators 05, 06, and 12 in ISO/IEC International Standard 15434, Information Technology - Transfer Syntax for High Capacity Automatic Data Capture Media.

(5) *Unique item identifier*.

(i) The Contractor shall-

(A) Determine whether to-

(1) Serialize within the enterprise identifier;

(2) Serialize within the part, lot, or batch number; or

(3) Use a DoD recognized unique identification equivalent (e.g. Vehicle Identification Number); and

(B) Place the data elements of the unique item identifier (enterprise identifier; serial number; DoD recognized unique identification equivalent; and for serialization within the part, lot, or batch number only: original part, lot, or batch number) on items requiring marking by paragraph (c)(1) of this clause, based on the criteria provided in MIL-STD-130, Identification Marking of U.S. Military Property, latest version;

(C) Label shipments, storage containers and packages that contain uniquely identified items in accordance with the requirements of MIL-STD-129, Military Marking for Shipment and Storage, latest version; and

(D) Verify that the marks on items and labels on shipments, storage containers, and packages are machine readable and conform to the applicable standards. The contractor shall use an automatic identification technology device for this verification that has been programmed to the requirements of Appendix A, MIL-STD-130, latest version.

(ii) The issuing agency code-

(A) Shall not be placed on the item; and

(B) Shall be derived from the data qualifier for the enterprise identifier.

(d) For each item that requires item unique identification under paragraph (c)(1)(i), (ii), or (iv) of this clause or when item unique identification is provided under paragraph (c)(1)(v), in addition to the information provided as part of the Material Inspection and Receiving Report specified elsewhere in this contract, the Contractor shall report at the time of delivery, as part of the Material Inspection and Receiving Report, the following information:

(1) Unique item identifier.

(2) Unique item identifier type.

(3) Issuing agency code (if concatenated unique item identifier is used).

(4) Enterprise identifier (if concatenated unique item identifier is used).

(5) Original part number (if there is serialization within the original part number).

(6) Lot or batch number (if there is serialization within the lot or batch number).

(7) Current part number (optional and only if not the same as the original part number).

(8) Current part number effective date (optional and only if current part number is used).

(9) Serial number (if concatenated unique item identifier is used).

(10) Government's unit acquisition cost.

(11) Unit of measure.

(12) Type designation of the item as specified in the contract schedule, if any.

(13) Whether the item is an item of Special Tooling or Special Test Equipment.

(14) Whether the item is covered by a warranty.

(e) For embedded subassemblies, components, and parts that require DoD item unique identification under paragraph (c)(1)(iii) of this clause or when item unique identification is provided under paragraph (c)(1)(v), the Contractor shall report as part of the Material Inspection and Receiving Report specified elsewhere in this contract, the following information:

(1) Unique item identifier of the parent item under paragraph (c)(1) of this clause that contains the embedded subassembly, component, or part.

(2) Unique item identifier of the embedded subassembly, component, or part.

(3) Unique item identifier type.**

(4) Issuing agency code (if concatenated unique item

identifier is used).**

(5) Enterprise identifier (if concatenated unique item identifier is used).**

(6) Original part number (if there is serialization within the original part number).**

(7) Lot or batch number (if there is serialization within the lot or batch number).**

(8) Current part number (optional and only if not the same as the original part number).**

(9) Current part number effective date (optional and only if current part number is used).**

(10) Serial number (if concatenated unique item identifier is used).**

(11) Description.

** Once per item.

(f) The Contractor shall submit the information required by paragraphs (d) and (e) of this clause as follows:

(1) End items shall be reported using the receiving report capability in Wide Area WorkFlow (WAWF) in accordance with the clause at 252.232-7003. If WAWF is not required by this contract, and the contractor is not using WAWF, follow the procedures at http://dodprocurementtoolbox.com/site/uidregistry/.

(2) Embedded items shall be reported by one of the following methods-

(i) Use of the embedded items capability in WAWF;

(ii) Direct data submission to the IUID Registry following the procedures and formats at http://dodprocurementtoolbox.com/site /uidregistry/; or

(iii) Via WAWF as a deliverable attachment for exhibit line item number (fill in) ____, Unique Item Identifier Report for Embedded Items, Contract Data Requirements List, DD Form 1423.

(g) *Subcontracts*. If the Contractor acquires by subcontract, any item(s) for which item unique identification is required in accordance with paragraph (c)(1) of this clause, the Contractor shall include this clause, including this paragraph (g), in the applicable subcontract(s), including subcontracts for commercial products or commercial services.

(End of clause)

Addendum to 52.212-4, Contract Terms and Conditions - Commercial Products and Commercial Services

THE FOLLOWING NAVSUP LOCAL TEXT IS HEREBY MADE PART OF THE STATEMENT OF WORK /PERFORMANCE WORK STATEMENT

ELECTRONIC FUND TRANSFER (EFT)

The Contractor must agree to receive payment by EFT. Transaction fee (currently JPY735) will be deducted by the Financial Institution (Bank of America) making payment. Additional fee may be imposed by the bank designated to receive payment.

CONSUMPTION TAX

(a) The Governments of the United States and Japan have agreed that this contract is exempt from the Japanese Consumption Tax. In accordance with paragraph (c) of the clause FAR 52.229-6, "TAXES -- FOREIGN FIXEDPRICE CONTRACTS (FEB 2013)," the offerors or quoters shall not include the Consumption Tax (including underlying taxes) in their proposal or quotations. By submission of your proposal or quotation, you are certifying that your proposal or quotation does not contain any such tax. The following U.S. Government (USG) proof of purchase forms shall be used to claim the exemption at tax offices:

USG Standard Form 1034
USG Standard Form 1113
USG Standard Form 44
Department of Defense Form 1155
Navy Comptroller Form 2277

(b) The Contractor shall retain the appropriate USG proof of purchase forms set forth above for a period of seven (7) years. In addition, the Contractor shall maintain adequate records containing all pertinent information with regard to the claiming of Consumption Tax exemptions related to this contract. These records shall be subject to review by the Contracting Officer, or his or her designated representative, at any time up to seven (7) years from the date of final payment under this contract.

(c) Any questions concerning the applicability of the Consumption Tax should be directed to the appropriate local tax office.

CUSTOMS AND TAX EXEMPTION

(a) The Contractor shall, notwithstanding any other clause in this contract to the contrary, be required to submit a request in writing to the Contracting Officer for issuance of a Tax Exemption Certificate for any import duties and all taxes paid or to be paid from which the U.S. Government is entitled to an exemption. These taxes and duties are enumerated in Article XII of the Status of Forces Agreement under Article VI of the Treaty of Mutual Cooperation and Security between the Governments of the United States of America and Japan, regarding facilities areas and the status of United States Armed Forces in Japan. The Contractor's request shall include the following information:

(1) Name of contractor;
(2) Contract number and job order number (if applicable);
(3) Nomenclature of taxable material to be delivered and intended use;
(4) Quantity of taxable material used or to be delivered; and
(5) Period of taxable material use.

(b) In the case of gasoline and other petroleum products, the Contractor shall be responsible for making every reasonable effort to determine the accuracy of his figures on consumption. In this regard, the Contractor shall, upon request of the Contracting Officer, present all available data used by the Contractor as the basis for determining such figures. The Contractor shall be required to maintain adequate records containing all pertinent information with regard to the above requirements. Further, these records shall be subject to review by the Contracting Officer at any time up to three years from the date of final payment under this contract.

Contract Terms and Conditions Required To Implement Statutes or Executive Orders — Commercial Products and Commercial Services

Addendum to Contract Clauses

Contract Clauses

FAR Clauses Incorporated by Reference

Number	Title	Effective Date	Alternate/ Deviation	Variation Effective Date
52.204-19	Incorporation by Reference of Representations and Certifications.	Nov 2014		
52.209-10	Prohibition on Contracting With Inverted Domestic Corporations. (Deviation 2026-O0038)	Jan 2026		
52.209-6	Protecting the Government's Interest When Subcontracting With Contractors Debarred, Suspended, Proposed for Debarment, or Voluntarily Excluded. (Deviation 2026-O0038)	Jan 2026		
52.240-91	Security Prohibitions and Exclusions. (Deviation 2026-O0038)	Jan 2026		
52.244-6	Subcontracts for Commercial Products and Commercial Services. (Deviation 2026-O0038)	Mar 2026		
52.247-34	F.o.b. Destination.	Dec 1990		
52.225-14	Inconsistency between English Version and Translation of Contract.	Jan 2000		
52.233-3	Protest after Award. (Deviation 2026-O0038) (Alternate I)	Jan 2026	Alternate I	Feb 2026
52.240-93	Basic Safeguarding of Covered Contractor Information Systems. (Deviation 2026-O0038)	Jan 2026		

DFARS Clauses Incorporated by Reference

Number	Title	Effective Date	Alternate/ Deviation	Variation Effective Date
252.225-7041	Correspondence in English.	May 1997		
252.225-7048	Export-Controlled Items.	May 2013		
252.232-7008	Assignment of Claims (Overseas).	May 1997		
252.233-7001	Choice of Law (Overseas).	May 1997		
252.243-7001	Pricing of Contract Modifications.	Nov 1991		
252.225-7972	Prohibition on the Procurement of Foreign-Made Unmanned Aircraft Systems. (DEVIATION 2024-O0014)	Jul 2024	Deviation 2024-O0014	Aug 2024
252.244-7999	Subcontracts for Commercial Products or Commercial Services. (DEVIATION 2026-O0015)	Jan 2026	Deviation 2026-O0015	Jan 2026

FAR Clauses Incorporated by Full Text

52.252-2 Clauses Incorporated by Reference. (Jan 1998)

Clauses Incorporated By Reference (Feb 1998)

This contract incorporates one or more clauses by reference, with the same force and effect as if they were given in full text. Upon request, the Contracting Officer will make their full text available. Also, the full text of a clause may be accessed electronically at this/these address(es):

FAR Clauses: https://www.acquisition.gov/far-overhaul/far-part-deviation-guide

DFARS Clauses: https://www.acq.osd.mil/dpap/dars/dfars_far_overhaul_class_deviations.html

(End of clause)

52.252-6 Authorized Deviations in Clauses. (Oct 2020)

Authorized Deviations in Clauses (Nov 2020)

(a) The use in this solicitation or contract of any Federal Acquisition Regulation (48 CFR Chapter 1) clause with an authorized deviation is indicated by the addition of "(DEVIATION)" after the date of the clause.

(b) The use in this solicitation or contract of any DFARS (48 CFR Chapter 2) clause with an authorized deviation is indicated by the addition of "(DEVIATION)" after the name of the regulation.

(End of clause)

52.232-34 Payment by Electronic Funds Transfer-Other than System for Award Management. (Jun 2013)

Payment by Electronic Funds Transfer-Other than System for Award Management (Jul 2013)

(a) Method of payment.

(1) All payments by the Government under this contract shall be made by electronic funds transfer (EFT) except as provided in paragraph (a)(2) of this clause. As used in this clause, the term "EFT" refers to the funds transfer and may also include the payment information transfer.

(2) In the event the Government is unable to release one or more payments by EFT, the Contractor agrees to either-

(i) Accept payment by check or some other mutually agreeable method of payment; or

(ii) Request the Government to extend payment due dates until such time as the Government makes payment by EFT (but see paragraph (d) of this clause).

(b) Mandatory submission of Contractor's EFT information.

(1) The Contractor is required to provide the Government with the information required to make payment by EFT (see paragraph (j) of this clause). The Contractor shall provide this information directly to the office designated in this contract to receive that information (hereafter: "designated office") by "the date when the contractor submit first invoice, using EFT Form established by DFAS". If not otherwise specified in this contract, the payment office is the designated office for receipt of the Contractor's EFT information. If more than one designated office is named for the contract, the Contractor shall provide a separate notice to each office. In the event that the EFT information changes, the Contractor shall be responsible for providing the updated information to the designated office(s).

(2) If the Contractor provides EFT information applicable to multiple contracts, the Contractor shall specifically state the applicability of this EFT information in terms acceptable to the designated office. However, EFT information supplied to a designated office shall be applicable only to contracts that identify that designated office as the office to receive EFT information for that contract.

(c) *Mechanisms for EFT payment*. The Government may make payment by EFT through either the Automated Clearing House (ACH) network, subject to the rules of the National Automated Clearing House Association, or the Fedwire Transfer System. The rules governing Federal payments through the ACH are contained in 31 CFR part 210.

(d) Suspension of payment.

(1) The Government is not required to make any payment under this contract until after receipt, by the designated office, of the correct EFT payment information from the Contractor. Until receipt of the correct EFT information, any invoice or contract financing request shall be deemed not to be a proper invoice for the purpose of prompt payment under this contract. The prompt payment terms of the contract regarding notice of an improper invoice and delays in accrual of interest penalties apply.

(2) If the EFT information changes after submission of correct EFT information, the Government shall begin using the changed EFT information no later than 30 days after its receipt by the designated office to the extent payment is made by EFT. However, the Contractor may request that no further payments be made until the updated EFT information is implemented by the payment office. If such suspension would result in a late payment under the prompt payment terms of this contract, the Contractor's request for suspension shall extend the due date for payment by the number of days of the suspension.

(e) Liability for uncompleted or erroneous transfers.

(1) If an uncompleted or erroneous transfer occurs because the Government used the Contractor's EFT information incorrectly, the Government remains responsible for-

(i) Making a correct payment;

(ii) Paying any prompt payment penalty due; and

(iii) Recovering any erroneously directed funds.

(2) If an uncompleted or erroneous transfer occurs because the Contractor's EFT information was incorrect, or was revised within 30 days of Government release of the EFT payment transaction instruction to the Federal Reserve System, and-

(i) If the funds are no longer under the control of the payment office, the Government is deemed to have made payment and the Contractor is responsible for recovery of any erroneously directed funds; or

(ii) If the funds remain under the control of the payment office, the Government shall not make payment and the provisions of paragraph (d) shall apply.

(f) *EFT and prompt payment*. A payment shall be deemed to have been made in a timely manner in accordance with the prompt payment terms of this contract if, in the EFT payment transaction instruction released to the Federal Reserve System, the date specified for settlement of the payment is on or before the prompt payment due date, provided the specified payment date is a valid date under the rules of the Federal Reserve System.

(g) *EFT and assignment of claims*. If the Contractor assigns the proceeds of this contract as provided for in the assignment of claims terms of this contract, the Contractor shall require as a condition of any such assignment, that the assignee shall provide the EFT information required by paragraph (j) of this clause to the designated office, and shall be paid by EFT in accordance with the terms of this clause. In all respects, the requirements of this clause shall apply to the assignee as if it were the Contractor. EFT information that shows the ultimate recipient of the transfer to be other than the Contractor, in the absence of a proper assignment of claims acceptable to the Government, is incorrect EFT information within the meaning of paragraph (d) of this clause.

(h) *Liability for change of EFT information by financial agent*. The Government is not liable for errors resulting from changes to EFT information provided by the Contractor's financial agent.

(i) *Payment information*. The payment or disbursing office shall forward to the Contractor available payment information that is suitable for transmission as of the date of release of the EFT instruction to the Federal Reserve System. The Government may request the Contractor to designate a desired format and method(s) for delivery of payment information from a list of formats and methods the payment office is capable of executing. However, the Government does not guarantee that any particular format or method of delivery is available at any particular payment office and retains the latitude to use the format and delivery method most convenient to the Government. If the Government makes payment by check in accordance with paragraph (a) of this clause, the Government shall mail the payment information to the remittance address in the contract.

(j) *EFT information*. The Contractor shall provide the following information to the designated office. The Contractor may supply this data for this or multiple contracts (see paragraph (b) of this clause). The Contractor shall designate a single financial agent per contract capable of receiving and processing the EFT information using the EFT methods described in paragraph (c) of this clause.

(1) The contract number (or other procurement identification number).

(2) The Contractor's name and remittance address, as stated in the contract(s).

(3) The signature (manual or electronic, as appropriate), title, and telephone number of the Contractor official authorized to provide this information.

(4) The name, address, and 9-digit Routing Transit Number of the Contractor's financial agent.

(5) The Contractor's account number and the type of account (checking, saving, or lockbox).

(6) If applicable, the Fedwire Transfer System telegraphic abbreviation of the Contractor's financial agent.

(7) If applicable, the Contractor shall also provide the name, address, telegraphic abbreviation, and 9-digit Routing Transit Number of the correspondent financial institution receiving the wire transfer payment if the Contractor's financial agent is not directly on-line to the Fedwire Transfer System; and, therefore, not the receiver of the wire transfer payment.

(End of clause)

DFARS Clauses Incorporated by Full Text

252.225-7963 Antiterrorism/Force Protection for Defense Contractors Outside the United States. (DEVIATION 2026-O0041) (Jan 2026) Deviation 2026-O0041 (Feb 2026)

ANTITERRORISM/FORCE PROTECTION POLICY FOR DEFENSE CONTRACTORS OUTSIDE THE UNITED STATES (DEVIATION 2026-O0041) (FEB 2026)

(a) *Definition*. "United States," as used in this clause, means, the 50 States, the District of Columbia, and outlying areas.

(b) Except as provided in paragraph (c) of this clause, the Contractor and its subcontractors, if performing or traveling outside the United States under this contract, shall--

(1) Affiliate with the Overseas Security Advisory Council, if the Contractor or subcontractor is a U.S. entity;

(2) Ensure that Contractor and subcontractor personnel who are U.S. nationals and are in-country on a non-transitory basis, register with the U. S. Embassy, and that Contractor and subcontractor personnel who are third country nationals comply with any security related requirements of the Embassy of their nationality;

(3) Provide, to Contractor and subcontractor personnel, antiterrorism/force protection awareness information commensurate with that which the Department of Defense (DoD) provides to its military and civilian personnel and their families, to the extent such information can be made available prior to travel outside the United States; and

(4) Obtain and comply with the most current antiterrorism/force protection guidance for Contractor and subcontractor personnel.

(c) The requirements of this clause do not apply to any subcontractor that is--

(1) A foreign government;

(2) A representative of a foreign government; or

(3) A foreign corporation wholly owned by a foreign government.

(d) Information and guidance pertaining to DoD antiterrorism/force protection can be obtained from Naval Criminal Investigative Service (NCIS), Code 21; telephone, DSN 288-9077 or commercial (202) 433-9077.

(End of clause)

Additional Regulation or Supplemental Clauses Incorporated by Full Text

225-9401(4-22) SUPTXT225-9401(4-22) JAPANESE CONCILIATION PROCEDURES (Dec 2023)

JAPANESE CONCILIATION PROCEDURES

(a) Except as otherwise provided in this contract any disagreement arising under this contract which is not resolved by the parties to this contract may be submitted to the US-Japan Joint Committee for conciliation in accordance with paragraph 10, Article XVIII, of the Status of Forces Agreement under Article VI of the Treaty of Mutual Cooperation and Security between Japan and the United States of America. Request by the Contractor for conciliation shall be made in accordance with the procedures provided herein.

(b) In the event the Contractor desires conciliation after the decision of the Contracting Officer has been served upon him, he will first file his appeal from such findings of fact within the time limits described therein before filing request for conciliation with the Joint Committee and then request for appellate authority under the clause of this contract entitled Disputes to suspend its action on his appeal until such time as the Joint Committee has had an opportunity for effecting conciliation.

(c) The request for conciliation will be submitted by the Contractor through the nearest local Japanese Defense Facilities Administration Bureau to the Contract Conciliation Panel of the Joint Committee. Upon the filing of the request with the Joint Committee, the Contractor will immediately notify the Contracting Officer in writing that the request for conciliation has been filed.

(d) In the event the disagreement submitted to the Joint Committee under subparagraph (b) above has been resolved through conciliation, it will be the responsibility of the Contractor to notify the appellate authority designated in the clause of this contract, entitled Disputes, of the settlement of the dispute and to withdraw his appeal.

(e) In the event the Contractor who has submitted a request for conciliation to the Joint Committee under subparagraph (b) above desires, notwithstanding the pending request for conciliation, that action by the appropriate authority under the clause of this contract entitled Disputes be resumed on his appeal, it is his responsibility to so request the said authority in writing. The Joint Committee shall be immediately informed by the Contractor of his action taken hereunder.

(f) No request for conciliation can be submitted to the Joint Committee in the case of a dispute upon which the final decision of the appropriate authority under the clause of this contract entitled Disputes has been rendered. Pending the hearing of conciliation panel the Contractor shall proceed diligently with the performance of the contract and in accordance with the Contracting Officer's decision. The provisions of this local text shall not prejudice any right which the parties to the contract may have to file a civil suit.

243-9400(1-92) SUPTXT243-9400(1-92) AUTHORIZED CHANGES ONLY BY THE CONTRACTING OFFICER (Dec 2023)

AUTHORIZED CHANGES ONLY BY THE CONTRACTING OFFICER

(a) Except as specified in paragraph (b) below, no order, statement, or conduct of Government personnel who visit the Contractor's facilities or in any other manner communicate with Contractor personnel during the performance of this contract shall constitute a change under the "Changes" clause of this contract.

(b) The Contractor shall not comply with any order, direction or request of Government personnel unless it is issued in writing and signed by the Contracting Officer, or is pursuant to specific authority otherwise included as a part of this contract.

(c) The Contracting Officer is the only person authorized to approve changes in any of the requirements of this contract and notwithstanding provisions contained elsewhere in this contract, the said authority remains solely with the Contracting Officer. In the event the Contractor effects any change at the direction of any person other than the Contracting Officer, the change will be considered to have been made without authority and no adjustment will be made in the contract price to cover any increase in charges incurred as a result thereof. The Contracting Officer is: TBD.

List of Contract Documents, Exhibits, or Attachments

Attachments:

Number	Attachment Name	Attachment Description	Reference Identifier	Date
01	Enclosures (1) through (12) - Drawings for Fire Hose Manifold	Drawings		12 Jun 2026

Solicitation Provisions

FAR Clauses Incorporated by Reference

Number	Title	Effective Date	Alternate/ Deviation	Variation Effective Date
52.212-1	Instructions to Offerors-Commercial Products and Commercial Services. (Deviation 2026-O0038)	Jan 2026		

DFARS Clauses Incorporated by Reference

Number	Title	Effective Date	Alternate/ Deviation	Variation Effective Date
252.203-7005	Representation Relating to Compensation of Former DoD Officials.	Aug 2022		
252.204-7024	Notice on the Use of the Supplier Performance Risk System.	Feb 2023		
252.225-7055	Representation Regarding Business Operations with the Maduro Regime.	Apr 2022		
252.225-7059	Prohibition on Certain Procurements from the Xinjiang Uyghur Autonomous Region-Representation.	May 2023		

Addendum to 52.212-1, Instructions to Offerors - Commercial Products and Commercial Services

NOTE

This solicitation is intended only for sources duly authorized to operate and do business in Japan, as prescribed by DFARS 252.225-7042. Prime Contractors outside of Japan must submit documentation that unambiguously demonstrates the Offer's compliance with DFARS 252.225-7042 (e.g. proof of incorporation) as part of their offer.

Quotation for this solicitation must be on an "ALL or NONE" basis. Partial or incomplete quotations are ineligible for award. Award will be made to the responsible quoter which is considered the most advantageous to the Government.

All Contract Line Item Numbers (CLINs) shall have a firm-fixed unit price (FOB Destination, Door-to-Door).

Quoters are reminded of the requirements associated with Subcontracting with contractors that are debarred, suspended or proposed for debarment contained at FAR 52.209-6. As with all FAR requirements, please ensure you are familiar with those requirements prior to submitting your proposal.

REQUEST FOR CLARIFICATION

Quoters may request clarification of any specification or contract term. No verbal requests for information will be accepted by the Contracting Officer or his/her Technical Representative. Quoter's questions must be submitted to the Contract Specialist in writing via email: maya.ichikawa.ln@us.navy.mil. All requests for clarification on the subject solicitation shall be emailed to the Contract Specialist by Monday, 22 June 2026, 10:00 A.M. Japan Standard Time (JST).

SUBMISSION OF QUOTATIONS

The quoter is required to submit a quotation in the following quantities:
- SF 1449 (Solicitation No.: N6264926QB058) and SF 30 Amendment (if any), signed - One copy.
- Price breakdown of the quotation - One copy.
- Published price list, (if available) - One copy.
- Technical documentation/specifications (Required if an "equal" item is proposed) - One copy.

Evaluation - Commercial Products and Commercial Services

FAR Clauses Incorporated by Full Text

52.212-2 Evaluation-Commercial Products and Commercial Services. (Deviation 2026-O0038) (Jan 2026)

Evaluation-Commercial Products and Commercial Services (Feb 2026) (Deviation 2026-O0038)

(a) Evaluation factors. The Government will award a contract resulting from this solicitation to the responsible Offeror whose offer conforming to the solicitation will be most advantageous to the Government, price and other factors considered. The following factors will be used to evaluate offers:

Technical - capability of the products or services offered to meet the agency's needs
Price - lowest price quote

Note: The Government will award on the basis of technical and price unless the Contracting Officer is aware of past performance information related to the low price quoter which indicates that quoter may not be most advantageous to the Government. In that case, the Government reserves the right to consider the past performance of other quotes and award to other than the lowest price quote.

(b) *Options (if applicable)*. The Government will evaluate offers for award purposes by adding the total price for all options to the total price for the basic requirement. The Government may determine that an offer is unacceptable if the option prices are significantly unbalanced. The evaluation of options does not obligate the Government to exercise the option(s).

(c) *Notice of award*. A written notice of award or acceptance of an offer furnished to the successful Offeror within the time for acceptance specified in the offer, shall result in a binding contract without further action by either party. Before the offer's specified expiration time, the Government may accept an offer (or part of an offer), whether or not there are negotiations after its receipt, unless a written notice of withdrawal is received before award.

(End of provision)

Addendum to Evaluation - Commercial Product and Commercial Services

Offeror Representations and Certifications - Commercial Products and Commercial Services

Addendum to Solicitation Provisions

FAR Clauses Incorporated by Reference

Number	Title	Effective Date	Alternate/ Deviation	Variation Effective Date
52.203-18	Prohibition on Contracting with Entities that Require Certain Internal Confidentiality Agreements or Statements-Representation.	Dec 2016		
52.222-50	Combating Trafficking in Persons. (Deviation 2026-O0038)	Jan 2026		
52.240-90	Security Prohibitions and Exclusions Representations and Certifications. (Deviation 2026-O0038)	Jan 2026		
52.204-7	System for Award Management-Registration. (Deviation 2026-O0038)	Jan 2026		

DFARS Clauses Incorporated by Reference

Number	Title	Effective Date	Alternate/ Deviation	Variation Effective Date
252.225-7973	Prohibition on the Procurement of Foreign-Made Unmanned Aircraft Systems###Representation. (DEVIATION 2024-O0014)	Jul 2024	Deviation 2024-O0014	Aug 2024

FAR Clauses Incorporated by Full Text

52.209-11 Representation by Corporations Regarding Delinquent Tax Liability or a Felony Conviction under any Federal Law. (Deviation 2026-O0038) (Jan 2026)

REPRESENTATION BY CORPORATIONS REGARDING DELINQUENT TAX LIABILITY OR A FELONY CONVICTION UNDER ANY FEDERAL LAW (FEB 2026) (DEVIATION 2026-O0038)

(a) The Government will not enter into a contract with any corporation that-

(1) Has any unpaid Federal tax liability that has been assessed, for which all judicial and administrative remedies have been exhausted or have lapsed, and that is not being paid in a timely manner pursuant to an agreement with the authority responsible for collecting the tax liability, where the awarding agency is aware of the unpaid tax liability, unless an agency has considered suspension or debarment of the corporation and made a determination that suspension or debarment is not necessary to protect the interests of the Government; or

(2) Was convicted of a felony criminal violation under any Federal law within the preceding 24 months, where the awarding agency is aware of the conviction, unless an agency has considered suspension or debarment of the corporation and made a determination that this action is not necessary to protect the interests of the Government.

(b) The Offeror represents that-

(1) It is ☐ is not ☐ a corporation that has any unpaid Federal tax liability that has been assessed, for which all judicial and administrative remedies have been exhausted or have lapsed, and that is not being paid in a timely manner pursuant to an agreement with the authority responsible for collecting the tax liability; and

(2) It is ☐ is not ☐ a corporation that was convicted of a felony criminal violation under a Federal law within the preceding 24 months.

(End of provision)

52.252-1 Solicitation Provisions Incorporated by Reference. (Jan 1998)

Solicitation Provisions Incorporated by Reference (Feb 1998)

This solicitation incorporates one or more solicitation provisions by reference, with the same force and effect as if they were given in full text. Upon request, the Contracting Officer will make their full text available. The offeror is cautioned that the listed provisions may include blocks that must be completed by the offeror and submitted with its quotation or offer. In lieu of submitting the full text of those provisions, the offeror may identify the provision by paragraph identifier and provide the appropriate information with its quotation or offer. Also, the full text of a solicitation provision may be accessed electronically at this/these address(es):

FAR Clauses: https://www.acquisition.gov/far-overhaul/far-part-deviation-guide

DFARS Clauses: https://www.acq.osd.mil/dpap/dars/dfars_far_overhaul_class_deviations.html

(End of provision)

52.252-5 Authorized Deviations in Provisions. (Oct 2020)

Authorized Deviations in Provisions (Nov 2020)

(a) The use in this solicitation of any Federal Acquisition Regulation (48 CFR Chapter 1) provision with an authorized deviation is indicated by the addition of "(DEVIATION)" after the date of the provision.

(b) The use in this solicitation of any DFARS (48 CFR Chapter 2) provision with an authorized deviation is indicated by the addition of "(DEVIATION)" after the name of the regulation.

(End of provision)

52.209-2 Prohibition on Contracting With Inverted Domestic Corporations-Representation. (Deviation 2026-O0038) (Jan 2026)

PROHIBITION ON CONTRACTING WITH INVERTED DOMESTIC CORPORATIONS-REPRESENTATION (FEB 2026) (DEVIATION 2026-O0038)

(a) *Definitions*. As used in this clause-

Inverted domestic corporation means a foreign incorporated entity that meets the definition of an inverted domestic corporation under 6 U.S.C. 395 (b), applied in accordance with the rules and definitions of 6 U.S.C. 395(c).

Subsidiary means an entity in which more than 50 percent of the entity is owned-

(1) Directly by a parent corporation; or

(2) Through another subsidiary of a parent corporation.

(b) Government agencies are not permitted to use appropriated (or otherwise made available) funds for contracts with either an inverted domestic corporation, or a subsidiary of an inverted domestic corporation, unless the exception at 9.108-3(b) applies or the requirement is waived in accordance with the procedures at 9.108-5.

(c) *Representation*. The Offeror represents that-

(1) It ☐ is, ☐ is not an inverted domestic corporation; and

(2) It ☐ is, ☐ is not a subsidiary of an inverted domestic corporation.

(End of provision)

52.225-17 Evaluation of Foreign Currency Offers. (Jan 2000)

Evaluation of Foreign Currency Offers (Feb 2000)

If the Government receives offers in more than one currency, the Government will evaluate offers by converting the foreign currency to United States currency using Budget Exchange Rate (BER): JPY150.4415/USD1.00 in effect as follows:

(a) For acquisitions conducted using sealed bidding procedures, on the date of bid opening.

(b) For acquisitions conducted using negotiation procedures-

(1) On the date specified for receipt of offers, if award is based on initial offers; otherwise

(2) On the date specified for receipt of proposal revisions.

(End of provision)

DFARS Clauses Incorporated by Full Text

252.204-7998	**Alternate A, Annual Representations and Certifications. (DEVIATION 2026-O0043)**	**(Jan 2026)**	**Alternate A Deviation 2026-O0043**	**(Feb 2026) (Feb 2026)**

Alternate A, Annual Representations and Certifications (DEVIATION 2026-O0043)(FEB 2026)

Include the following paragraphs (e), (f), and (g) in the provision at FAR 52.204-7:

(e)(1) If the provision at FAR 52.204-7, System for Award Management - Registration, is included in this solicitation, paragraph (g) of this provision applies.

(2) If the provision at FAR 52.204-7, System for Award Management - Registration, is not included in this solicitation, and the Offeror has an active registration in the System for Award Management (SAM), the Offeror may choose to use paragraph (g) of this provision instead of completing the corresponding individual representations and certifications in the solicitation. The Offeror shall indicate which option applies by checking one of the following boxes:

☐ (i) Paragraph (g) applies.

☐ (ii) Paragraph (g) does not apply and the Offeror has completed the individual representations and certifications in the solicitation.

(f)(1) The following representations or certifications in the SAM database are applicable to this solicitation as indicated:

(i) 252.204-7016, Covered Defense Telecommunications Equipment or Services--Representation. Applies to all solicitations.

(ii) 252.216-7008, Economic Price Adjustment--Wage Rates or Material Prices Controlled by a Foreign Government. Applies to solicitations for fixed-price supply and service contracts when the contract is to be performed wholly or in part in a foreign country, and a foreign government controls wage rates or material prices and may during contract performance impose a mandatory change in wages or prices of materials.

(iii) 252.225-7042, Authorization to Perform. Applies to all solicitations when performance will be wholly or in part in a foreign country.

(iv) 252.225-7049, Prohibition on Acquisition of Certain Foreign Commercial Satellite Services--Representations. Applies to solicitations for the acquisition of commercial satellite services.

(v) 252.225-7050, Disclosure of Ownership or Control by the Government of a Country that is a State Sponsor of Terrorism. Applies to all solicitations expected to result in contracts of $150,000 or more.

(vi) 252.229-7012, Tax Exemptions (Italy)--Representation. Applies to solicitations when contract performance will be in Italy.

(vii) 252.229-7013, Tax Exemptions (Spain)--Representation. Applies to solicitations when contract performance will be in Spain.

(2) The following representations or certifications in SAM are applicable to this solicitation as indicated by the Contracting Officer: [*Contracting Officer check as appropriate.*]

☐(i) 252.209-7002, Disclosure of Ownership or Control by a Foreign Government.

☐(ii) 252.225-7000, Buy American--Balance of Payments Program Certificate.

☐(iii) 252.225-7020, Trade Agreements Certificate.

☐Use with Alternate I.

☐(iv) 252.225-7031, Secondary Arab Boycott of Israel.

☐(v) 252.225-7035, Buy American--Free Trade Agreements--Balance of Payments Program Certificate.

☐Use with Alternate I.

☐Use with Alternate II.

☐Use with Alternate III.

☐Use with Alternate IV.

☐Use with Alternate V.

☐ (vi) 252.226-7002, Representation for Demonstration Project for Contractors Employing Persons with Disabilities.

☐ (vii) 252.232-7015, Performance-Based Payments--Representation.

(g) The Offeror has completed the annual representations and certifications electronically via the SAM website at *https://www.sam.gov* After reviewing the SAM database information, the Offeror verifies by submission of the offer that the representations and certifications currently posted electronically that apply to this solicitation as indicated in FAR 52.204-7 and paragraph (f) of this provision have been entered or updated within the last 12 months, are current, accurate, complete, and applicable to this solicitation (including the business size standard applicable to the NAICS code referenced for this solicitation), as of the date of this offer, and are incorporated in this offer by reference (see FAR 4.203-1); except for the changes identified below [*Offeror to insert changes, identifying change by provision number, title, date*]. These amended representation(s) and/or certification (s) are also incorporated in this offer and are current, accurate, and complete as of the date of this offer.

FAR/DFARS provision No.	Title	Date	Change
___	___	___	___
___	___	___	___
___	___	___	___
___	___	___	___
___	___	___	___

Any changes provided by the Offeror are applicable to this solicitation only, and do not result in an update to the representations and certifications located in the SAM database.

(End of provision)

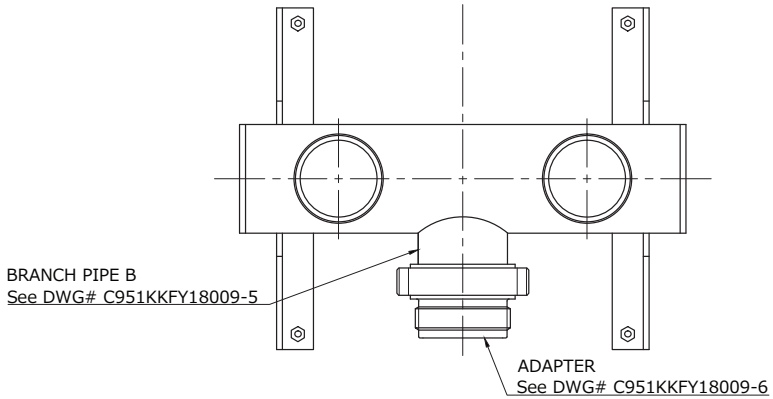

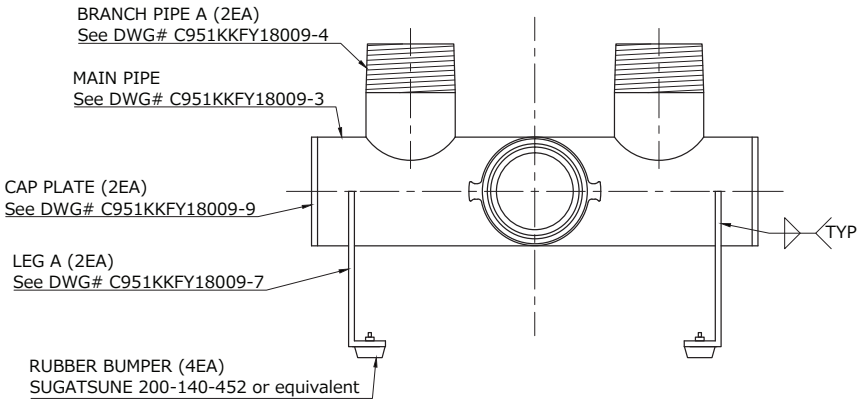

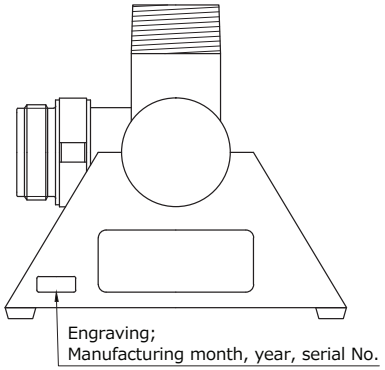

NOTES
1. Break all sharp edges and corners.
2. Paint in red except inside and threads.
3. Refer to DWG# C951KKFY18009-10 through -12 for welding.
4. Perform penetrant testing in accordance with JIS Z 2343.
5. Perform hydrostatic test. Test pressure: 216 - 220 psig, Duration: 30 min, Test fluid: clean fresh water

REV.	DATE	REVISOR	MODIFIED PORTIONS

SRF–JRMC C–950

Title
X99 FIRE HOSE MANIFOLD, Type-A

DWG No.	REV
C951KKFY18009-1	-

3rd angle projection	Scale 1:4	Unit INCH

Enclosure (1)

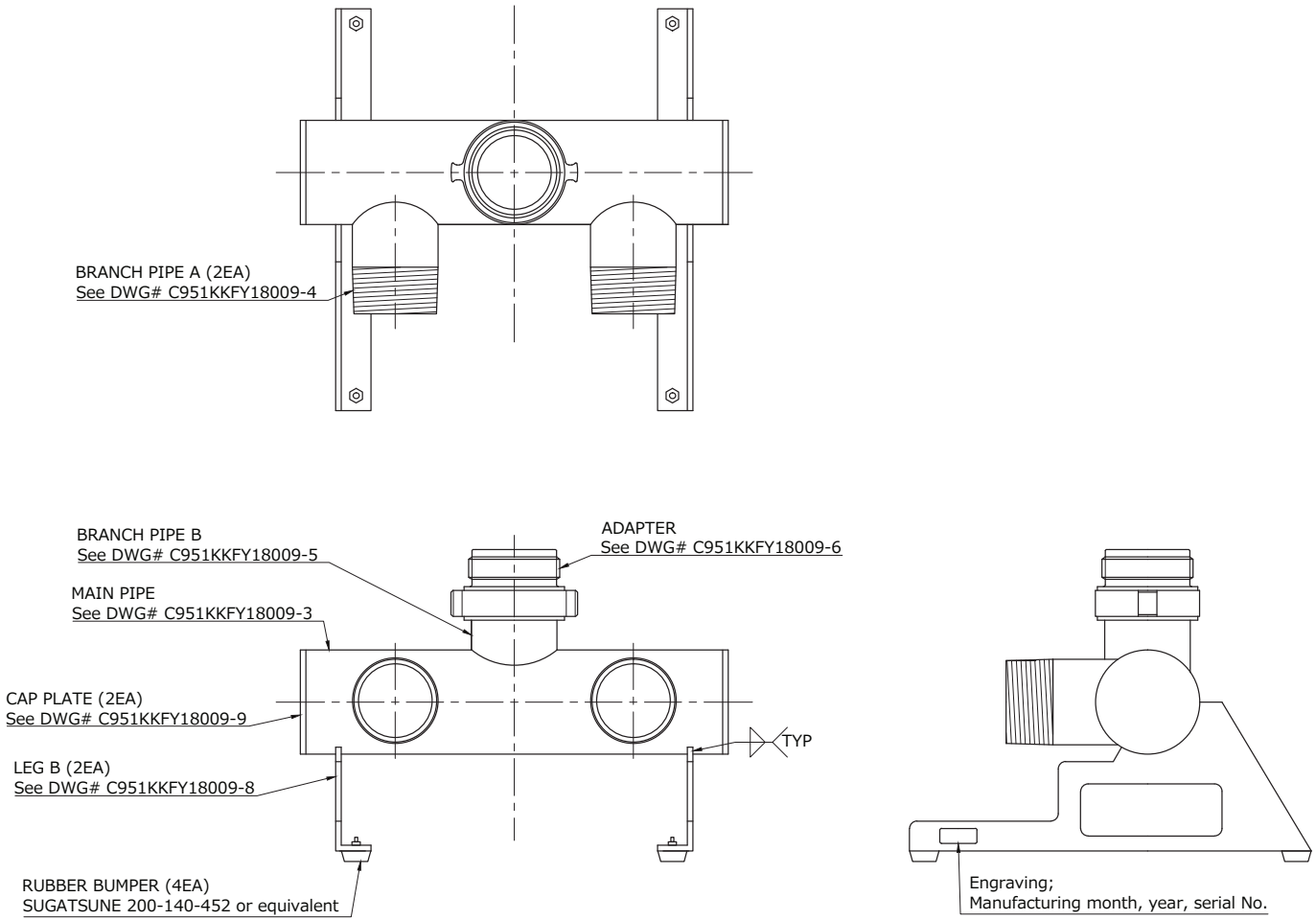

NOTES
1. Break all sharp edges and corners.
2. Paint in red except inside and threads.
3. Refer to DWG# C951KKFY18009-10 through -12 for welding.
4. Perform penetrant testing in accordance with JIS Z 2343.
5. Perform hydrostatic test. Test pressure: 216 - 220 psig, Duration: 30 min, Test fluid: clean fresh water

REV.	DATE	REVISOR	MODIFIED PORTIONS

SRF–JRMC C–950

Title
X99 FIRE HOSE MANIFOLD, Type-B

DWG No.	REV
C951KKFY18009-2	-

3rd angle projection	Scale 1:4	Unit INCH

Enclosure (2)

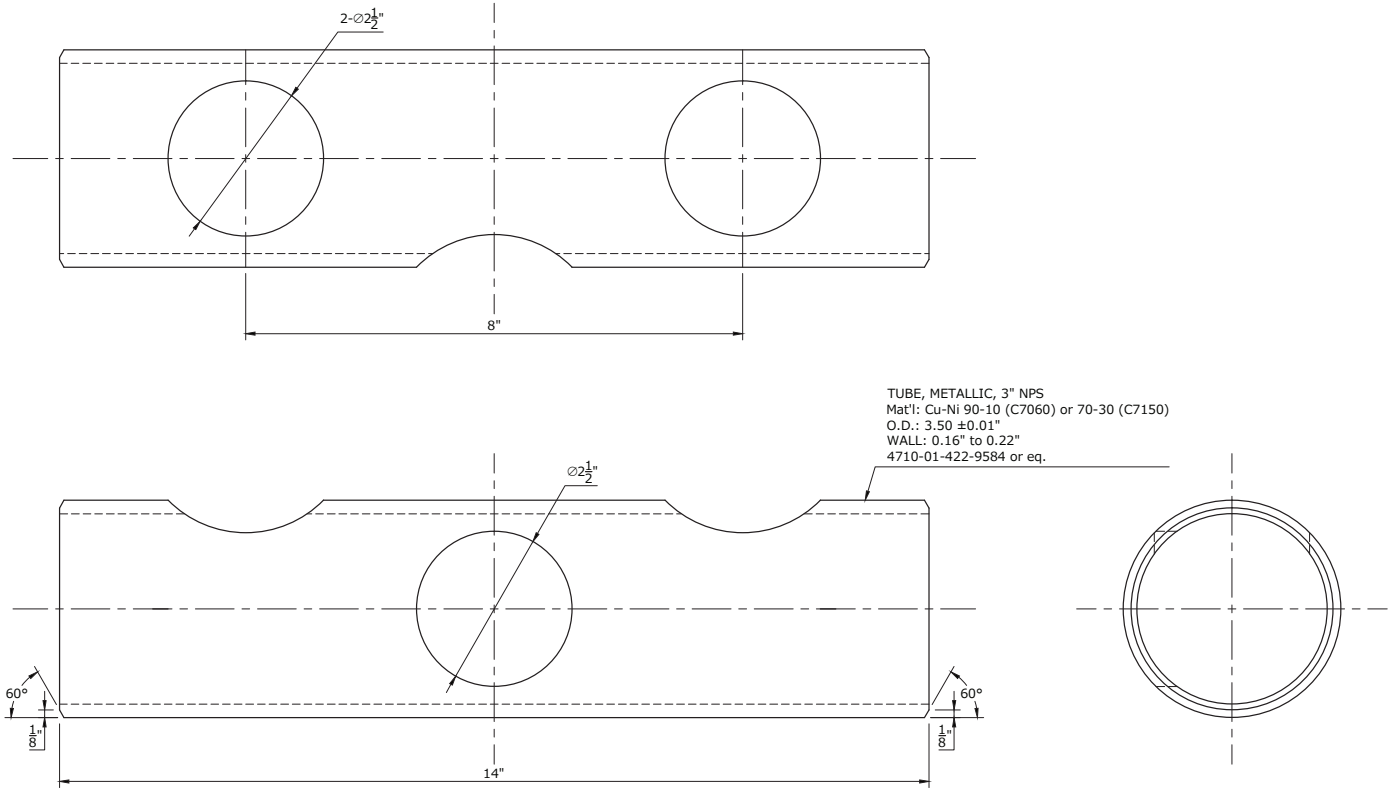

NOTES
1. Unless otherwise specified, allowable tolerance shall be JIS B 0405 CLASS C.
2. Unless otherwise specified, finish 125 all over.
3. Break all sharp edges and corners.

REV.	DATE	REVISOR	MODIFIED PORTIONS

SRF–JRMC C–950

Title
FIRE HOSE MANIFOLD, MAIN PIPE

DWG No.	REV
C951KKFY18009-3	-

3rd angle projection	Scale	1/2	Unit	INCH

Enclosure (3)

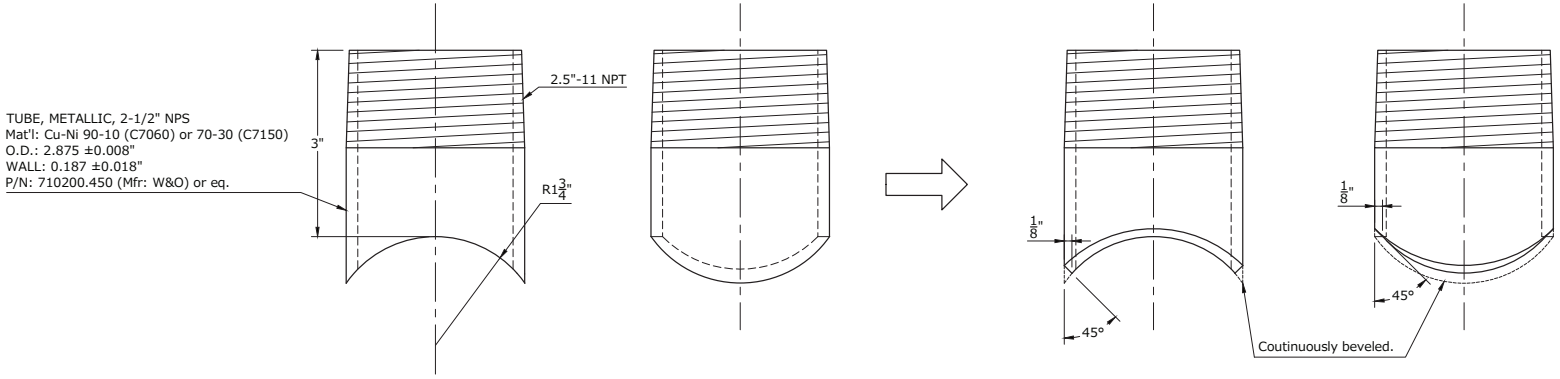

Process (1)

Process (2)

NOTES
1. Unless otherwise specified, allowable tolerance shall be JIS B 0405 CLASS C.
2. Unless otherwise specified, finish 125 all over.
3. Break all sharp edges and corners.

REV.	DATE	REVISOR	MODIFIED PORTIONS

SRF–JRMC C–950

Title
FIRE HOSE MANIFOLD, BRANCH PIPE A

DWG No.	REV
C951KKFY18009-4	-

3rd angle projection	Scale	1/2	Unit	INCH

Enclosure (4)

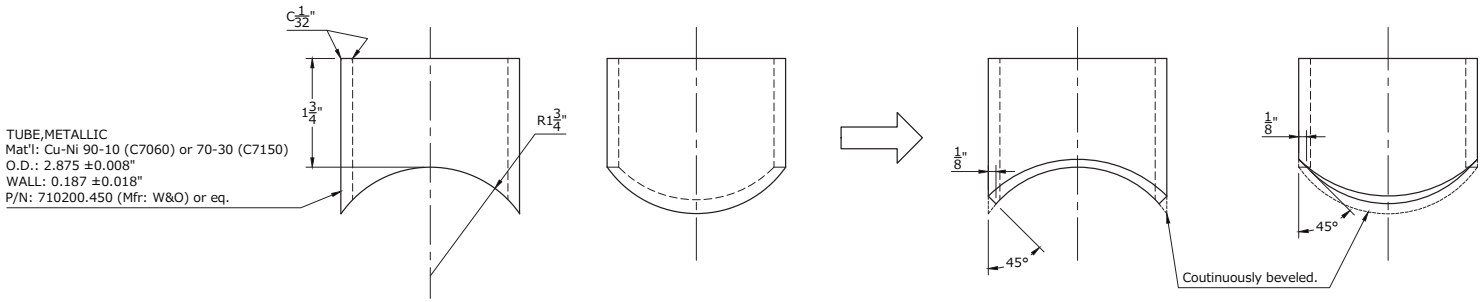

Process (1)

Process (2)

NOTES
1. Unless otherwise specified, allowable tolerance shall be JIS B 0405 CLASS C.
2. Unless otherwise specified, finish 125 all over.
3. Break all sharp edges and corners.

REV.	DATE	REVISOR	MODIFIED PORTIONS

SRF–JRMC C–950

Title
FIRE HOSE MANIFOLD, BRANCH PIPE B

DWG No.	REV
C951KKFY18009-5	-

3rd angle projection	Scale	1/2	Unit	INCH

Enclosure (5)

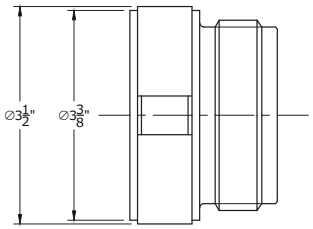

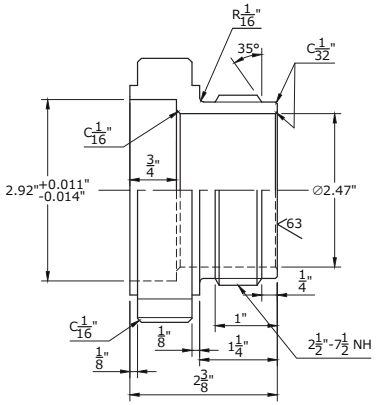

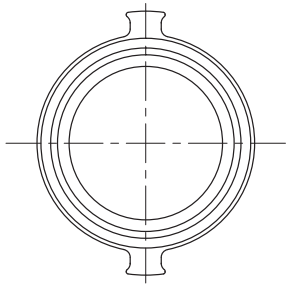

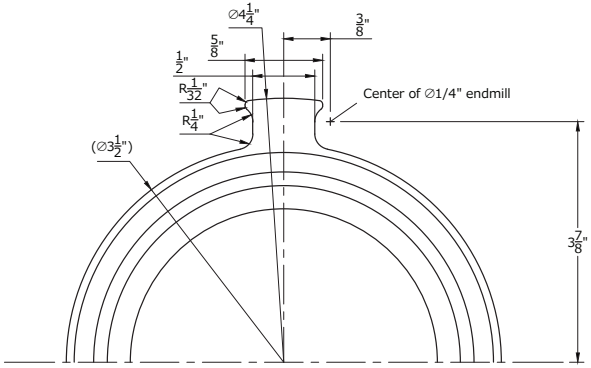

DETAIL OF ROCKER LUG
SCALE: 1/1

NOTES
1. Material: Cu-Ni 90-10 (C7060) or 70-30 (C7150)
2. Unless otherwise specified, allowable tolerance shall be JIS B 0405 CLASS C.
3. Unless otherwise specified, finish 125 all over.
4. 2.5"-7.5 NH threads shall be provided in accordance with NFPA 1963.
5. Break all sharp edges and corners.

REV.	DATE	REVISOR	MODIFIED PORTIONS

SRF–JRMC C–950

Title
FIRE HOSE MANIFOLD, ADAPTER

DWG No.	REV
C951KKFY18009-6	-

3rd angle projection	Scale	1/2	Unit	INCH

Enclosure (6)

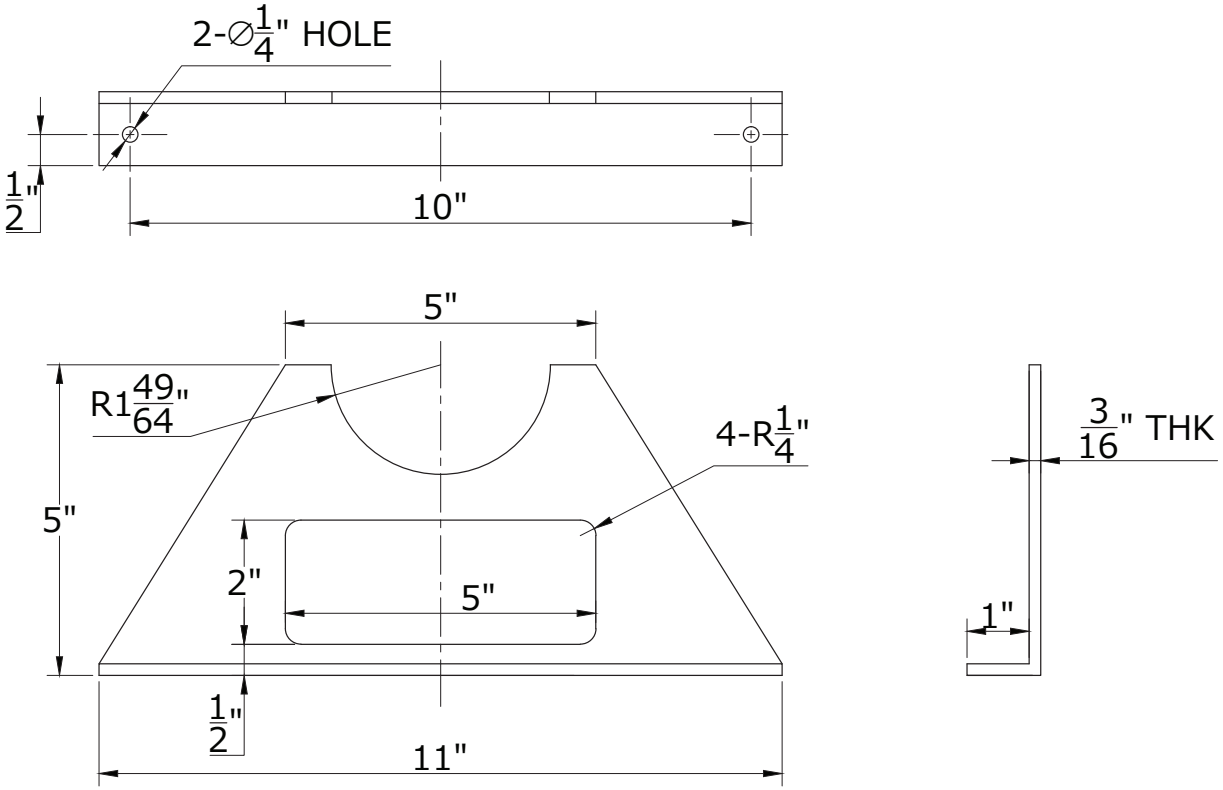

NOTES
1. Material: Cu-Ni 90-10 (C7060) or 70-30 (C7150)
2. Unless otherwise specified, allowable tolerance shall be JIS B 0405 CLASS C.
3. Break all sharp edges and corners.

REV.	DATE	REVISOR	MODIFIED PORTIONS

SRF–JRMC C–950

Title
FIRE HOSE MANIFOLD, LEG A

DWG No.	REV
C951KKFY18009-7	-

3rd angle projection	Scale	Unit
	1/2	INCH

Enclosure (7)

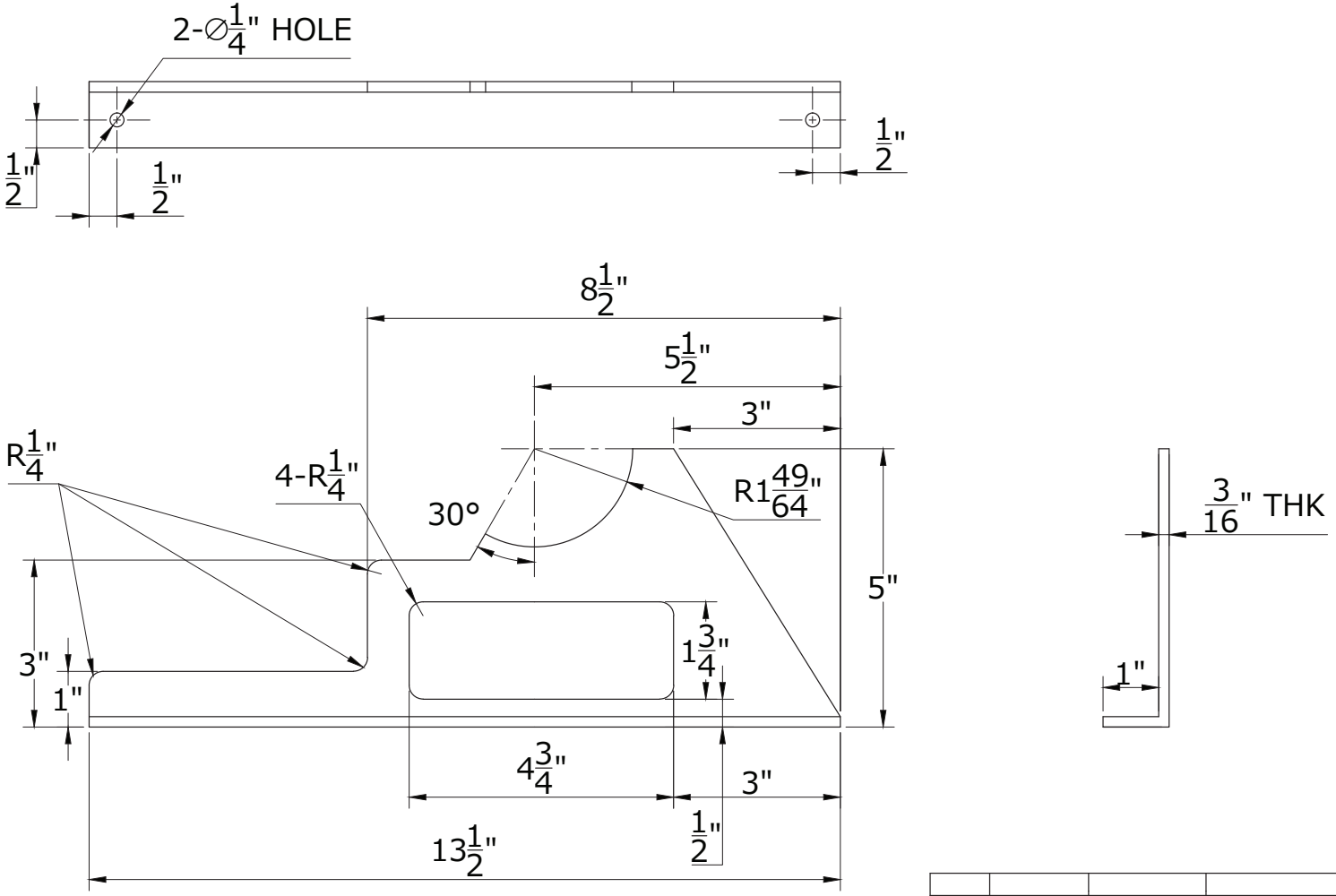

NOTES
1. Material: Cu-Ni 90-10 (C7060) or 70-30 (C7150)
2. Unless otherwise specified, allowable tolerance shall be JIS B 0405 CLASS C.
3. Break all sharp edges and corners.

REV.	DATE	REVISOR	MODIFIED PORTIONS

SRF–JRMC C–950

Title
FIRE HOSE MANIFOLD, LEG B

DWG No.	REV
C951KKFY18009-8	-

3rd angle projection	Scale	1/2	Unit	INCH

Enclosure (8)

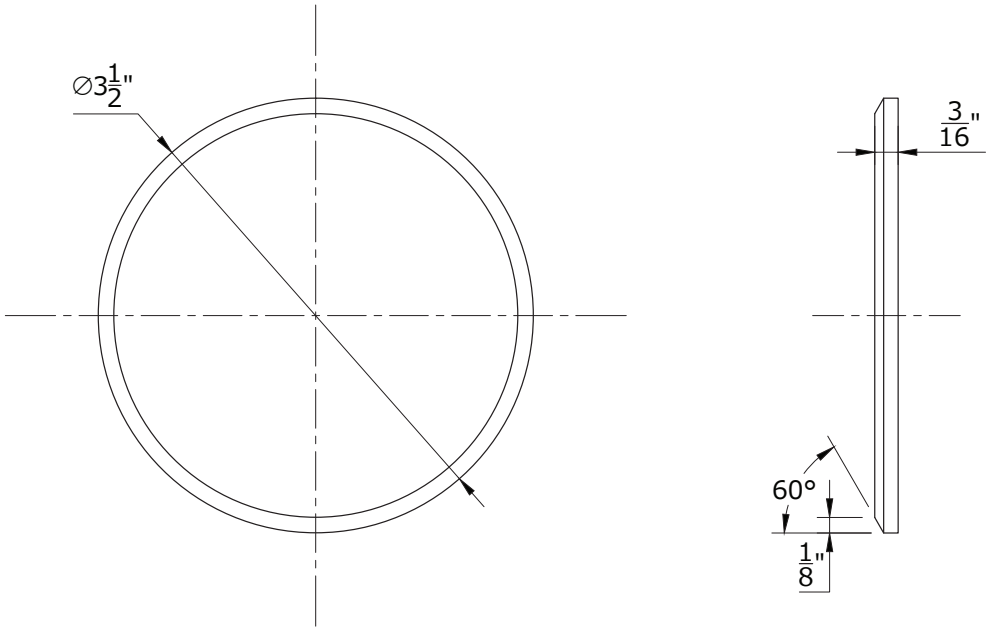

NOTES
1. Material: Cu-Ni 90-10 (C7060) or 70-30 (C7150)
2. Unless otherwise specified, allowable tolerance shall be JIS B 0405 CLASS C.
3. Break all sharp edges and corners.

REV.	DATE	REVISOR	MODIFIED PORTIONS

SRF–JRMC C–950

Title
FIRE HOSE MANIFOLD, CAP PLATE

DWG No.	REV
C951KKFY18009-9	-

3rd angle projection	Scale	1/2	Unit	INCH

Enclosure (9)

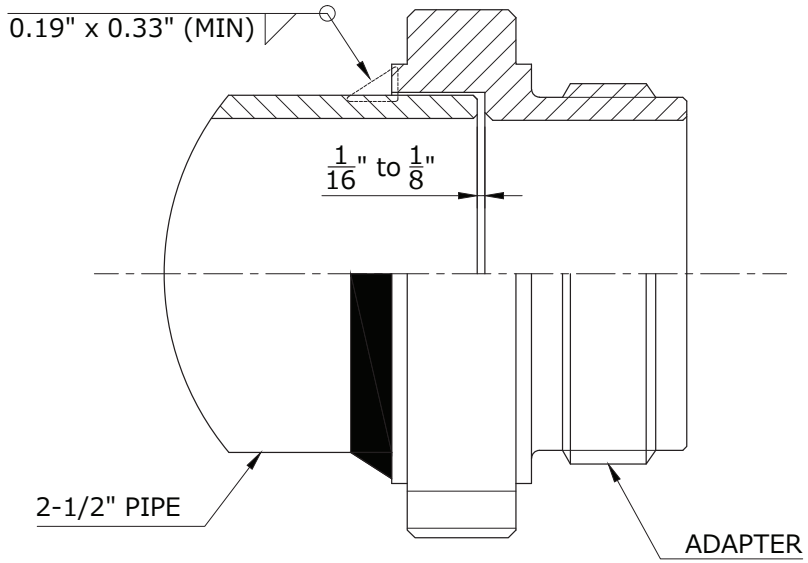

Notes
1. Socket welding between Adapter and Pipe shall be in accordance with this drawing.
2. Welding Process: Gas Tungsten Arc Welding
3. Preheat: 60°F (Min)
4. Interpass: 150°F (Max)
5. Filler Metal Type: MIL-EN/RN67 or equivalent
6. Torch Shielding Gas Type: Argon
7. Shielding Gas Flow Rate: 15 - 30 cubic feet/min
8. Diameter of Tungsten Electrode: 3/32" (Max)
9. Torch Cup Size: 5/16" (Min)
10. Post Weld Heat Treatment shall not be allowed.

References
1. NAVSHIPREPFACPI 074-5A
2. MIL-STD-22D P-14
3. JIS Z 3420

REV.	DATE	REVISOR	MODIFIED PORTIONS

SRF–JRMC C–950

Title
FIRE HOSE MANIFOLD, WLD ADAPTER

DWG No.	REV
C951KKFY18009-10	-

3rd angle projection	Scale 1/1	Unit INCH

Enclosure (10)

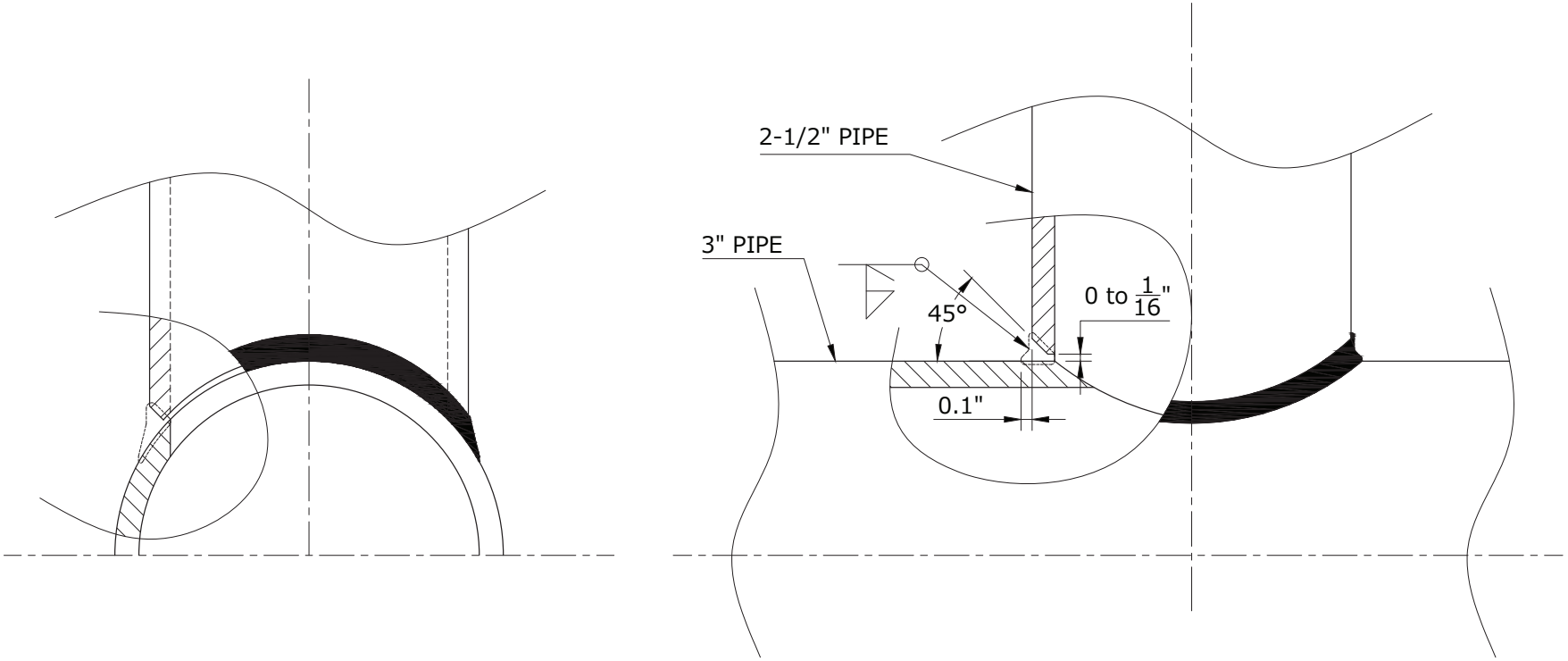

Notes
1. Welding for branched pipes shall be in accordance with this drawing.
2. Welding Process: Gas Tungsten Arc Welding
3. Preheat: 60°F (Min)
4. Interpass: 150°F (Max)
5. Filler Metal Type: MIL-EN/RN67 or equivalent
6. Torch Shielding Gas Type: Argon
7. Shielding Gas Flow Rate: 15 - 30 cubic feet/min
8. Diameter of Tungsten Electrode: 3/32" (Max)
9. Torch Cup Size: 5/16" (Min)
10. Post Weld Heat Treatment shall not be allowed.

References
1. NAVSHIPREPFACPI 074-5A
2. MIL-STD-22D P-62
3. JIS Z 3420

REV.	DATE	REVISOR	MODIFIED PORTIONS

SRF–JRMC C–950

Title
X99 FIRE HOSE ADAPTER, WLD BRANCH

DWG No.	REV
C951KKFY18009-11	-

3rd angle projection	Scale	1/1	Unit	INCH

Enclosure (11)

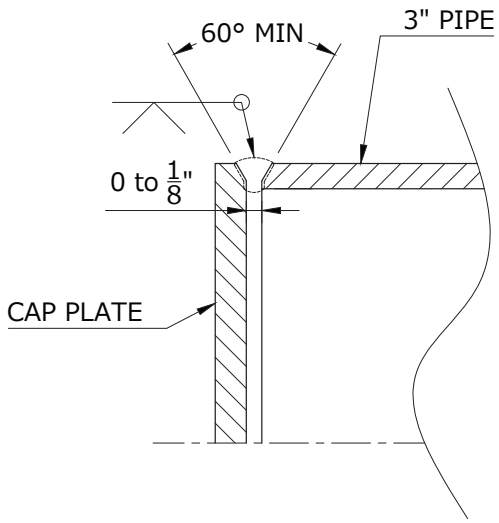

Notes
1. Welding between Pipe and Cap Plate shall be in accordance with this drawing.
2. Welding Process: Gas Tungsten Arc Welding
3. Inside purging is required.
4. Preheat: 60°F (Min)
5. Interpass: 150°F (Max)
6. Filler Metal Type: MIL-EN/RN67 or equivalent
7. Torch Shielding/Purging Gas Type: Argon
8. Shielding Gas Flow Rate: 15 - 30 cubic feet/min
9. Diameter of Tungsten Electrode: 3/32" (Max)
10. Torch Cup Size: 5/16" (Min)
11. Post Weld Heat Treatment shall not be allowed.

References
1. NAVSHIPREPFACPI 074-5A
2. MIL-STD-22D P-2
3. JIS Z 3420

REV.	DATE	REVISOR	MODIFIED PORTIONS

SRF–JRMC C–950

Title
X99 FIRE HOSE ADAPTER, WLD CAP PLATE

DWG No.	REV
C951KKFY18009-12	-

3rd angle projection	Scale	1/1	Unit	INCH

Enclosure (12)