CORPS OF ENGINEERS

U. S. ARMY

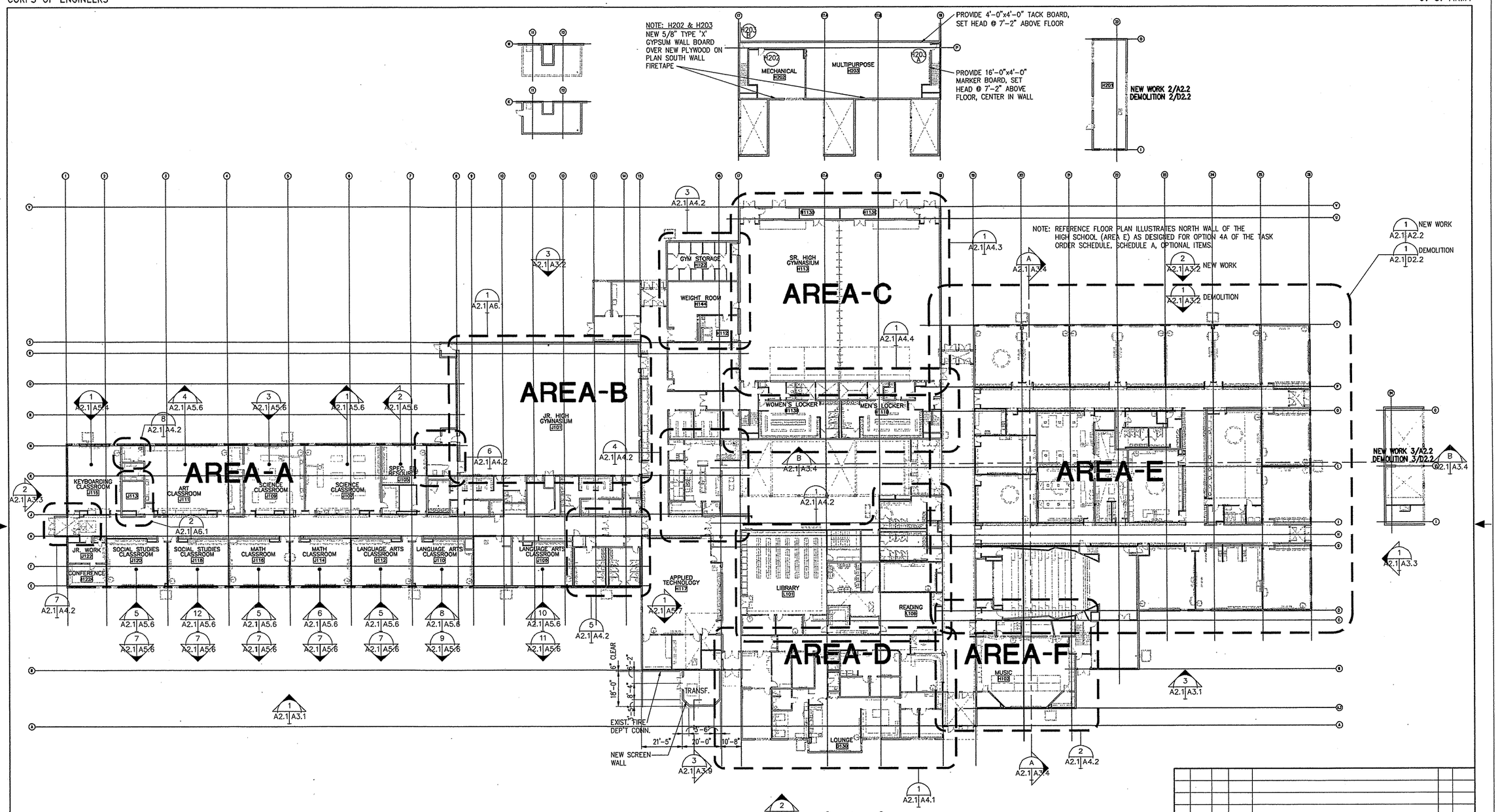

REFERENCE FLOOR PLAN

SCALE: 1"=20'-0"

REV.	DATE	C.O.	ACTION	DESCRIPTION	BY	APP'D.

CONTRACT NO.

CONTRACTOR

CITY STATE

RECOMMENDED: PRIME CONTRACTOR

APPROVED: RESIDENT ENGINEER

DATE:

USKH — A quarter century of design for Alaskans

ALASKA DISTRICT
CORPS OF ENGINEERS
ANCHORAGE, ALASKA

DESIGNED: HAP
DRAWN: MAF
TRACED:
CHECKED: JAH
SUBMITTED:
CH. SECT.

BEN EIELSON JR./SR. HIGH SCHOOL - PHASE 3
EIELSON AIR FORCE BASE, ALASKA
ARCHITECTURAL

REFERENCE FLOOR PLAN

RECOMMENDED: CHIEF, MILITARY TECHNICAL ENGINEERING BRANCH

APPROVED: CHIEF ENGINEERING DIVISION

DATE:

SCALE: 1"=20'-0"

SPEC. NO.

DRAWING NUMBER 29-02-38

SHEET OF

REFERENCE NO. A2.1

CORPS OF ENGINEERS

U. S. ARMY

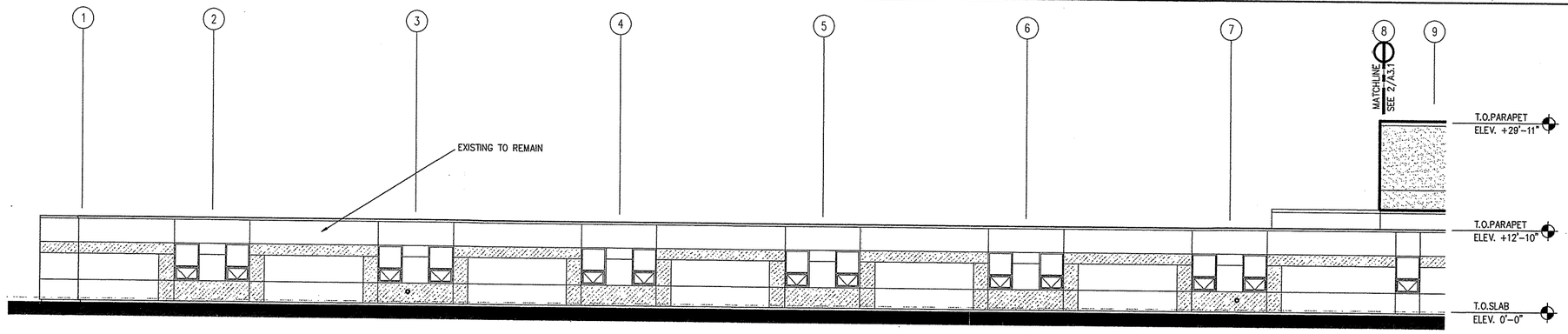

1 A2.1 A3.1 **SOUTH EXTERIOR ELEVATION**

SCALE: 1/8"=1'-0"

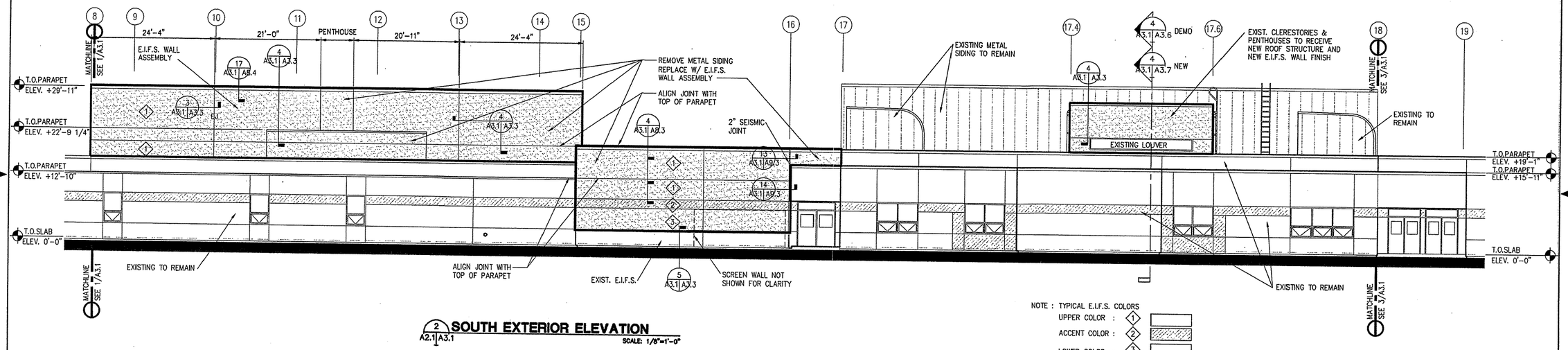

2 A2.1 A3.1 **SOUTH EXTERIOR ELEVATION**

SCALE: 1/8"=1'-0"

NOTE : TYPICAL E.I.F.S. COLORS

UPPER COLOR : 1

ACCENT COLOR : 2

LOWER COLOR : 3

SEE ROOM FINISH SCHEDULE UNSCHEDULED COLORS

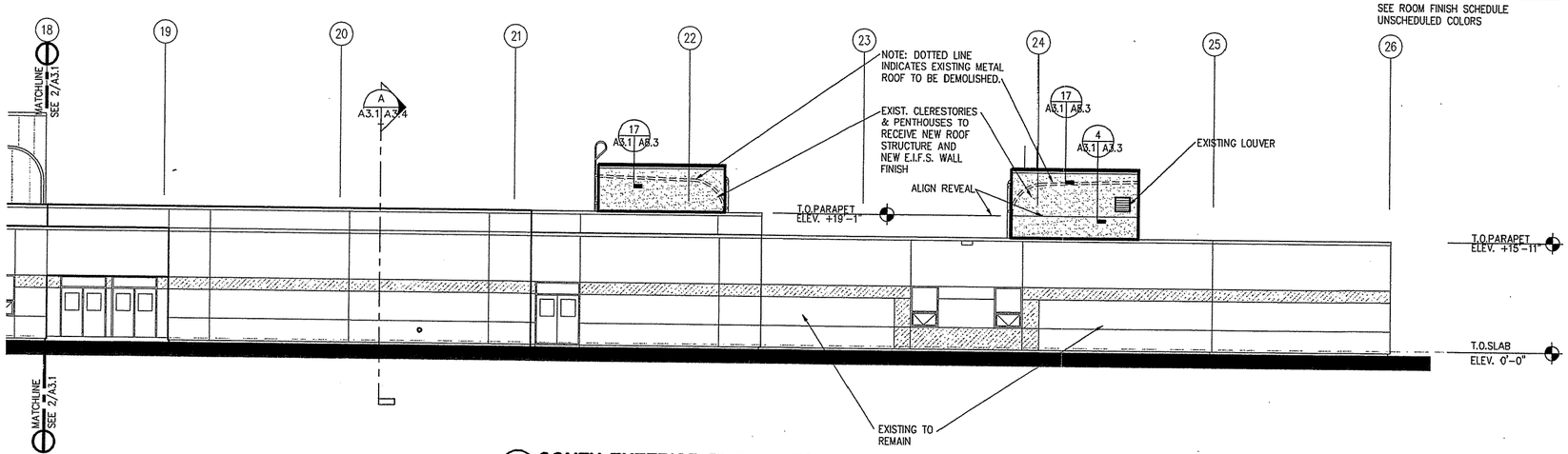

3 A2.1 A3.1 A2.2 **SOUTH EXTERIOR ELEVATION**

SCALE: 1/8"=1'-0"

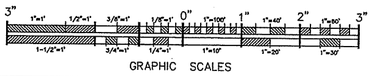

GRAPHIC SCALES

REV.	DATE	C.O.	ACTION	DESCRIPTION	BY	APP'D.

CONTRACT NO. _____

CONTRACTOR _____

CITY _____ STATE _____

RECOMMENDED: PRIME CONTRACTOR | APPROVED: RESIDENT ENGINEER | DATE:

USKH — A quarter century of design for Alaskans

ALASKA DISTRICT
CORPS OF ENGINEERS
ANCHORAGE, ALASKA

DESIGNED: HAP
DRAWN: MAF
TRACED:
CHECKED: JAH
SUBMITTED:
CH. SECT.

BEN EIELSON JR./SR. HIGH SCHOOL – PHASE 3
EIELSON AIR FORCE BASE, ALASKA
ARCHITECTURAL

EXTERIOR ELEVATIONS

RECOMMENDED: CHIEF, MILITARY TECHNICAL ENGINEERING BRANCH | APPROVED: CHIEF ENGINEERING DIVISION | DATE:

SCALE: 1/8"=1'-0" | SPEC. NO.

DRAWING NUMBER 29-02-38

SHEET OF

REFERENCE NO. A3.1

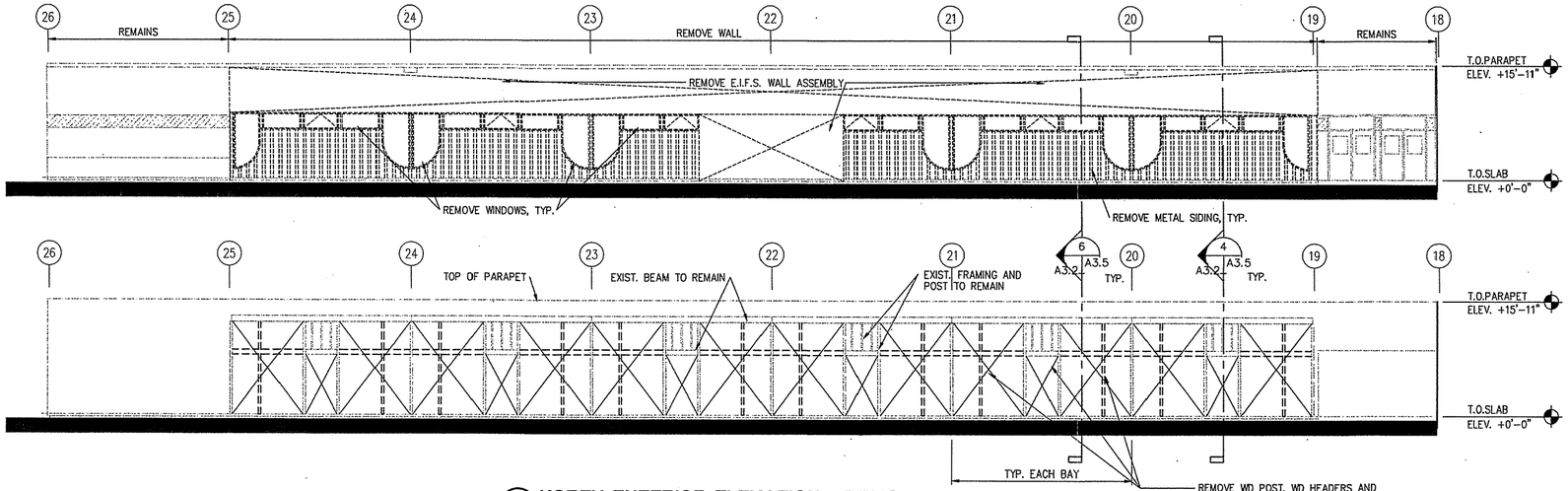

1 NORTH EXTERIOR ELEVATION - DEMO

D2.2 A3.2

SCALE: 1/8"=1'-0"

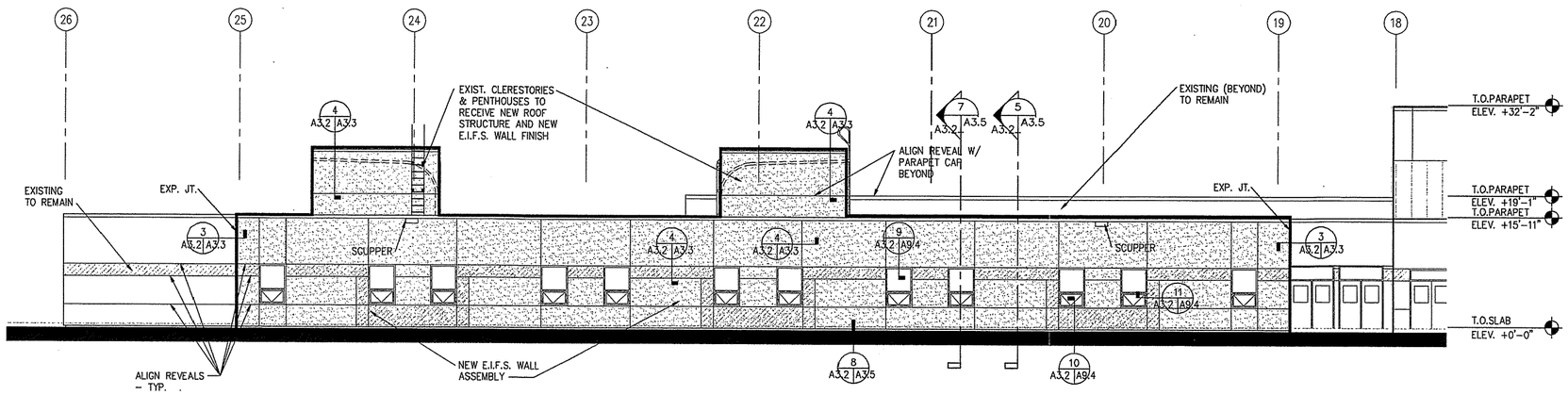

2 NORTH EXTERIOR ELEVATION - NEW WORK

A2.1 A3.2
A2.2

SCALE: 1/8"=1'-0"

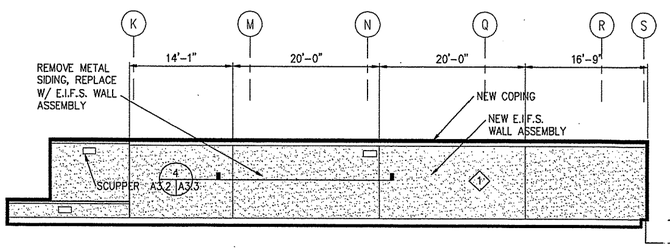

4 EAST SIDE GYMNASUIM ELEVATION

A3.2 A3.2

SCALE: 1/8"=1'-0"

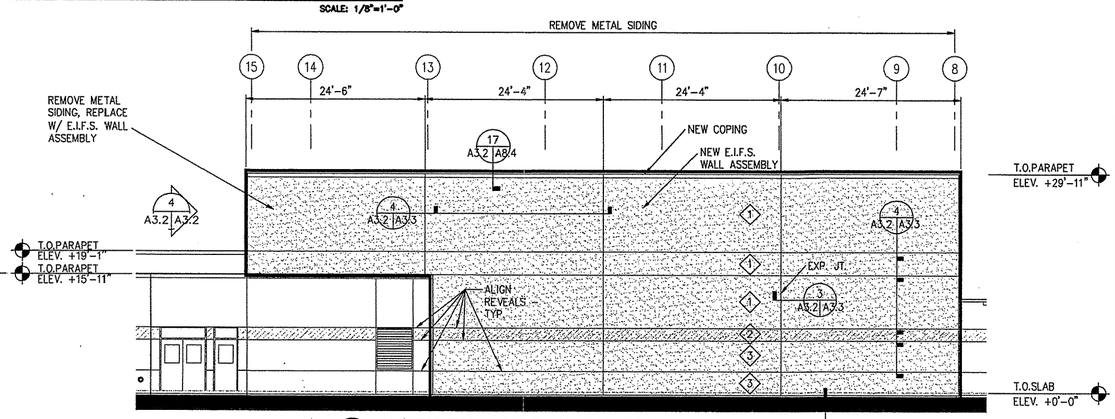

3 NORTH EXTERIOR ELEVATION

A2.1 A3.2

SCALE: 1/8"=1'-0"

NOTES:

1. TYPICAL E.I.F.S. COLORS
   UPPER COLOR : 1
   ACCENT COLOR : 2
   LOWER COLOR : 3
   SEE ROOM FINISH SCHEDULE UNSCHEDULED COLORS

2. THE NORTH EXTERIOR ELEVATION (DETAIL 2/A3.2) ILLUSTRATES NORTH WALL OF THE HIGH SCHOOL (AREA E) AS DESIGNED FOR OPTION 4A OF THE TASK ORDER SCHEDULE, SCHEDULE A, OPTIONAL ITEMS. FOR THE EXISTING EXTERIOR ELEVATION OF THE NORTH WALL, SEE DRAWING SHEET A2.2A (EXISTING NORTH ELEVATION).

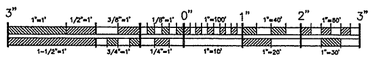

GRAPHIC SCALES

REV.	DATE	C.O.	ACTION	DESCRIPTION	BY	APP'D.

CONTRACTOR _____ CONTRACT NO. _____

CITY _____ STATE _____

RECOMMENDED: PRIME CONTRACTOR | APPROVED: RESIDENT ENGINEER | DATE:

USKH — A quarter century of design for Alaska

ALASKA DISTRICT
CORPS OF ENGINEERS
ANCHORAGE, ALASKA

DESIGNED: HAP
DRAWN: MAF
TRACED:
CHECKED: JAH
SUBMITTED:
SR. SECT.

BEN EIELSON JR./SR. HIGH SCHOOL – PHASE 3
EIELSON AIR FORCE BASE, ALASKA
ARCHITECTURAL

EXTERIOR ELEVATIONS

RECOMMENDED: CHIEF, MILITARY TECHNICAL ENGINEERING BRANCH | APPROVED: CHIEF ENGINEERING DIVISION | DATE:

SCALE: 1/8"=1'-0" | SPEC. NO.

DRAWING NUMBER 29-02-38

SHEET OF

REFERENCE NO. A3.2

CORPS OF ENGINEERS

U. S. ARMY

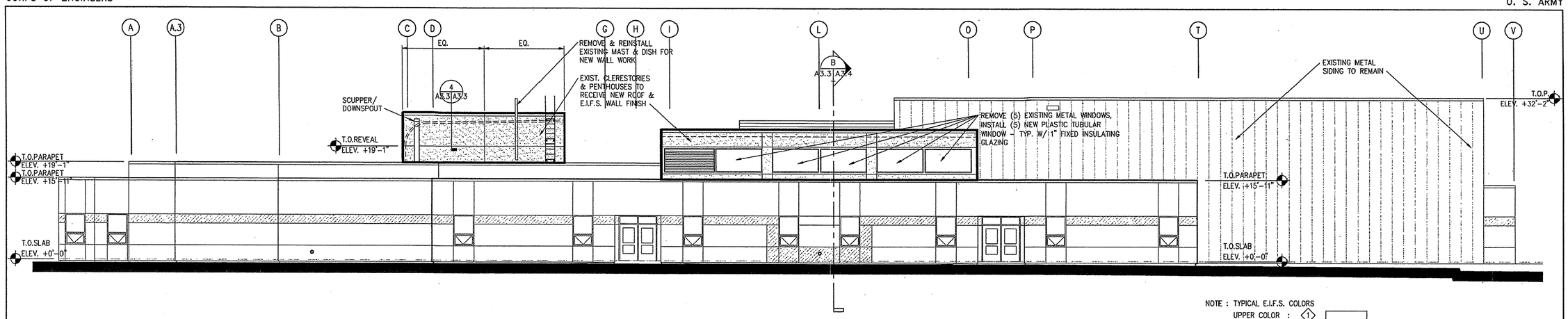

NOTE : TYPICAL E.I.F.S. COLORS
UPPER COLOR : 1
ACCENT COLOR : 2
LOWER COLOR : 3
SEE ROOM FINISH SCHEDULE UNSCHEDULED COLORS

1 EAST EXTERIOR ELEVATION

A2.1 A3.3 A2.2

SCALE: 1/8"=1'-0"

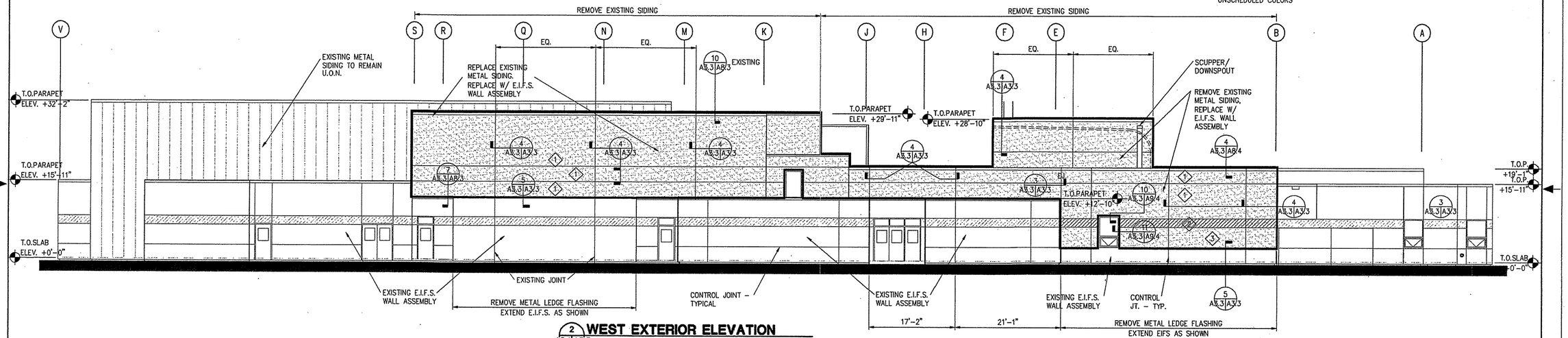

2 WEST EXTERIOR ELEVATION

A2.1 A3.3

SCALE: 1/8"=1'-0"

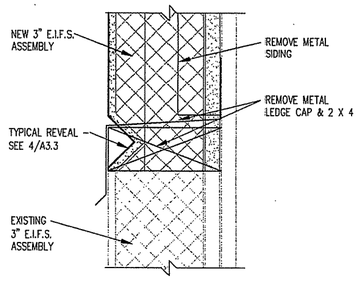

5 TYPICAL TIE-IN JOINT DETAIL

A3.1 A3.3 A3.2 A3.3

HORIZONTAL/VERTICAL

SCALE: 6"=1'-0"

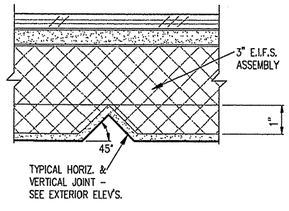

4 TYPICAL CONTROL JOINT DETAIL

A3.1 A3.3 A3.2 A3.3

HORIZONTAL/VERTICAL

SCALE: 6"=1'-0"

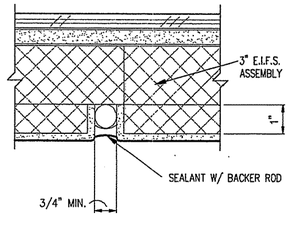

3 EXPANSION JOINT DETAIL

A3.1 A3.3 A3.2 A3.3

HORIZONTAL/VERTICAL

SCALE: 6"=1'-0"

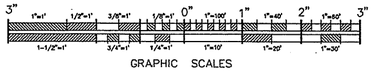

GRAPHIC SCALES

REFERENCE NO. A3.3

REV.	DATE	C.O.	ACTION	DESCRIPTION	BY	APP'D.

CONTRACTOR _____ CONTRACT NO. _____

CITY _____ STATE _____

RECOMMENDED: _____ PRIME CONTRACTOR

APPROVED: _____ RESIDENT ENGINEER

DATE:

USKH — A quarter century of design for Alaskans

ALASKA DISTRICT
CORPS OF ENGINEERS
ANCHORAGE, ALASKA

DESIGNED: HAP
DRAWN: MAF
TRACED:
CHECKED: JAH
SUBMITTED:
CH. SECT.

BEN EIELSON JR./SR. HIGH SCHOOL - PHASE 3
EIELSON AIR FORCE BASE, ALASKA
ARCHITECTURAL

EXTERIOR ELEVATIONS

RECOMMENDED: _____ CHIEF, MILITARY TECHNICAL ENGINEERING BRANCH

APPROVED: _____ CHIEF ENGINEERING DIVISION

DATE:

SCALE: 1/8"=1'-0"

SPEC. NO.

DRAWING NUMBER 29-02-38

SHEET OF

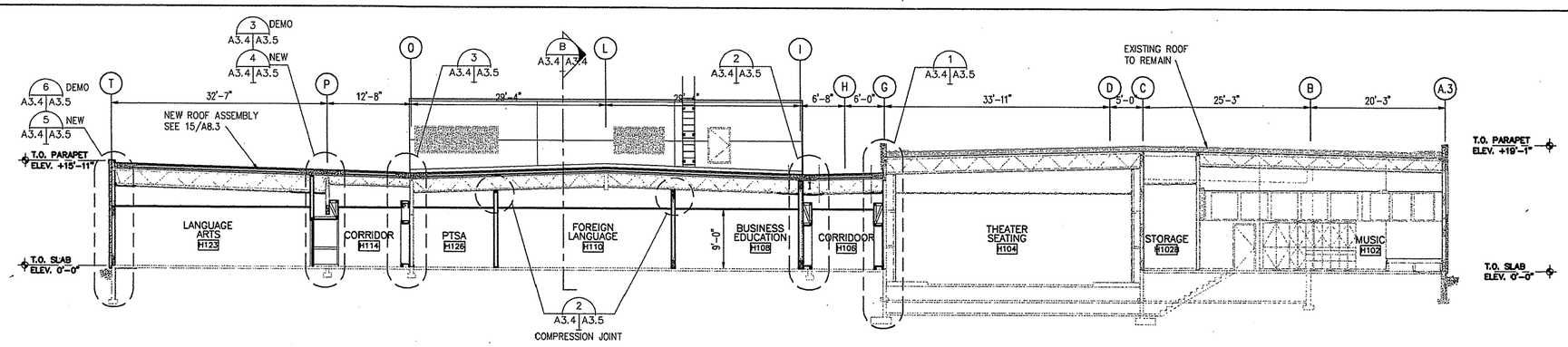

A BUILDING SECTION "A"
A2.1 A3.4 A2.2
SCALE: 1/8"=1'-0"

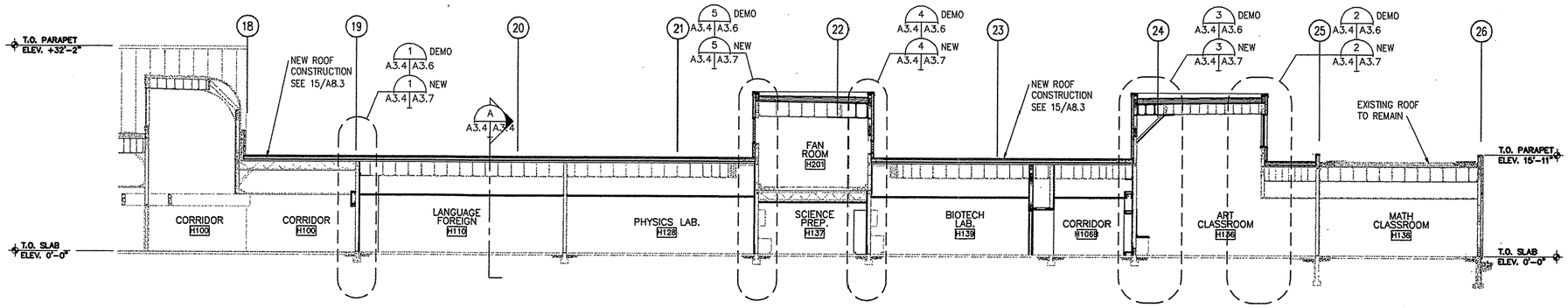

B BUILDING SECTION "B"
A2.1 A3.4 A2.2
SCALE: 1/8"=1'-0"

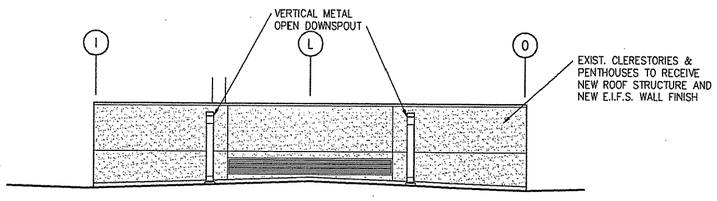

1 PARTIAL EAST EXTERIOR ELEVATION
A2.1 A3.4
SCALE: 1/8"=1'-0"

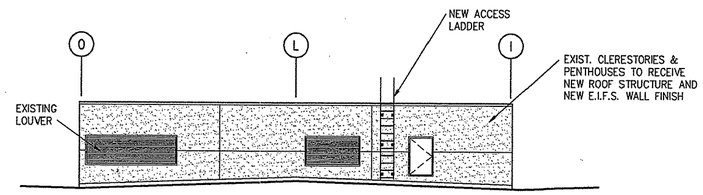

2 PARTIAL WEST EXTERIOR ELEVATION
A2.1 A3.4
SCALE: 1/8"=1'-0"

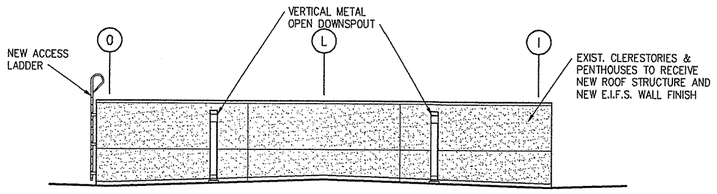

3 PARTIAL WEST EXTERIOR ELEVATION
A2.1 A3.4
SCALE: 1/8"=1'-0"

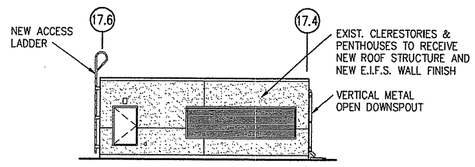

4 PARTIAL NORTH EXTERIOR ELEVATION
A2.1 A3.4
SCALE: 1/8"=1'-0"

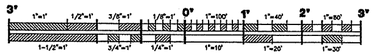

REV.	DATE	C.O.	ACTION	DESCRIPTION	BY	APP'D.

CONTRACTOR _____ CONTRACT NO. _____
CITY _____ STATE _____

RECOMMENDED: _____ PRIME CONTRACTOR
APPROVED: _____ RESIDENT ENGINEER
DATE:

USKH — A quarter century of design for Alaskans

ALASKA DISTRICT
CORPS OF ENGINEERS
ANCHORAGE, ALASKA

DESIGNED: HAP
DRAWN: MAF
TRACED:
CHECKED: JAH
SUBMITTED:
CH. SECT.

BEN EIELSON JR./SR. HIGH SCHOOL – PHASE 3
EIELSON AIR FORCE BASE, ALASKA
ARCHITECTURAL

BUILDING SECTIONS

RECOMMENDED: _____ CHIEF, MILITARY TECHNICAL ENGINEERING BRANCH
APPROVED: _____ CHIEF ENGINEERING DIVISION
DATE:

SCALE: AS SHOWN
SPEC. NO.
DRAWING NUMBER 29-02-38
SHEET OF

REFERENCE NO. A3.4

CORPS OF ENGINEERS

U. S. ARMY

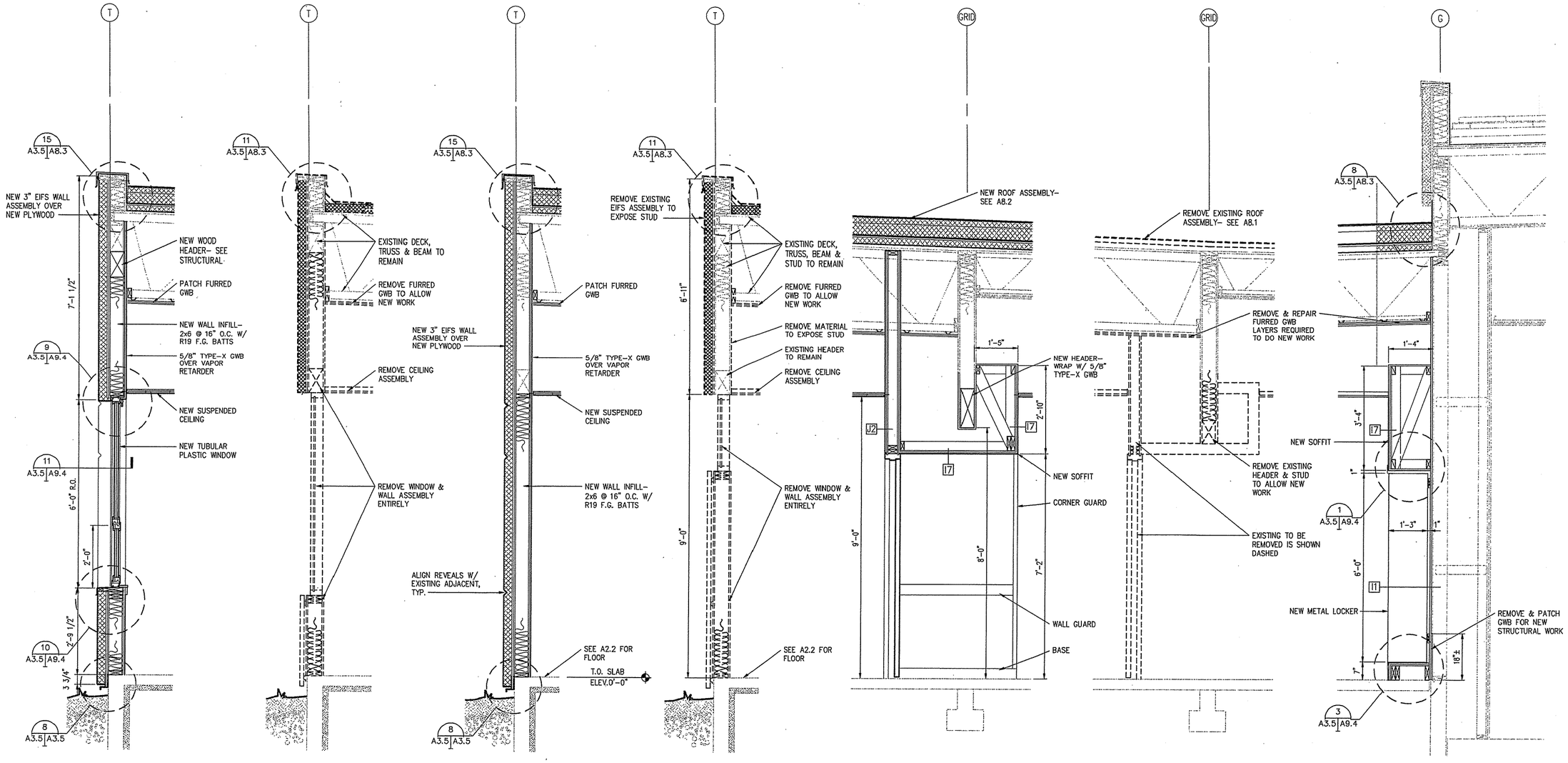

7 WALL SECTION - NEW
A3.4 A3.5 A2.2 A3.2 SCALE: 3/4"=1'-0"

6 WALL SECTION - DEMO
A3.4 A3.5 D2.2 A3.2 SCALE: 3/4"=1'-0"

5 WALL SECTION - NEW
A3.4 A3.5 A2.2 A3.2 SCALE: 3/4"=1'-0"

4 WALL SECTION - DEMO
A3.4 A3.5 D2.2 A3.2 SCALE: 3/4"=1'-0"

3 WALL SECTION - NEW
A3.4 A3.5 A2.2 SCALE: 3/4"=1'-0"

2 WALL SECTION - DEMO
A3.4 A3.5 D2.2 SCALE: 3/4"=1'-0"

1 WALL SECTION
A3.4 A3.5 A2.2 SCALE: 3/4"=1'-0"

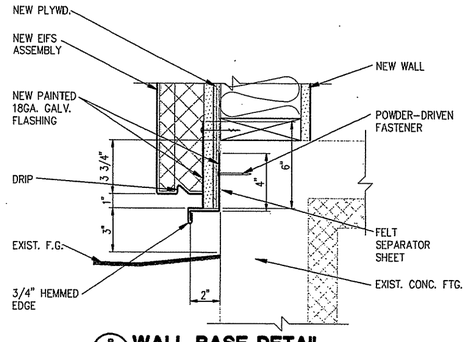

8 WALL BASE DETAIL
A3.5 A3.5 A3.2 SCALE: 3"=1'-0"

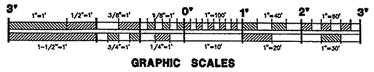

GRAPHIC SCALES

REFERENCE NO. A3.5

REV.	DATE	C.O.	ACTION	DESCRIPTION	BY	APP'D.

CONTRACT NO.

CONTRACTOR

CITY STATE

RECOMMENDED: PRIME CONTRACTOR

APPROVED: RESIDENT ENGINEER

DATE:

USKH A quarter century of design for Alaska

ALASKA DISTRICT CORPS OF ENGINEERS ANCHORAGE, ALASKA

DESIGNED: HAP
DRAWN: MAF
TRACED:
CHECKED: JAH
SUBMITTED:
CH. SECT.

BEN EIELSON JR./SR. HIGH SCHOOL – PHASE 3
EIELSON AIR FORCE BASE, ALASKA
ARCHITECTURAL

WALL SECTIONS

RECOMMENDED: CHIEF, MILITARY TECHNICAL ENGINEERING BRANCH

APPROVED: CHIEF ENGINEERING DIVISION

DATE:

SCALE: AS SHOWN

SPEC. NO.

DRAWING NUMBER 29-02-38

SHEET OF

CORPS OF ENGINEERS

U. S. ARMY

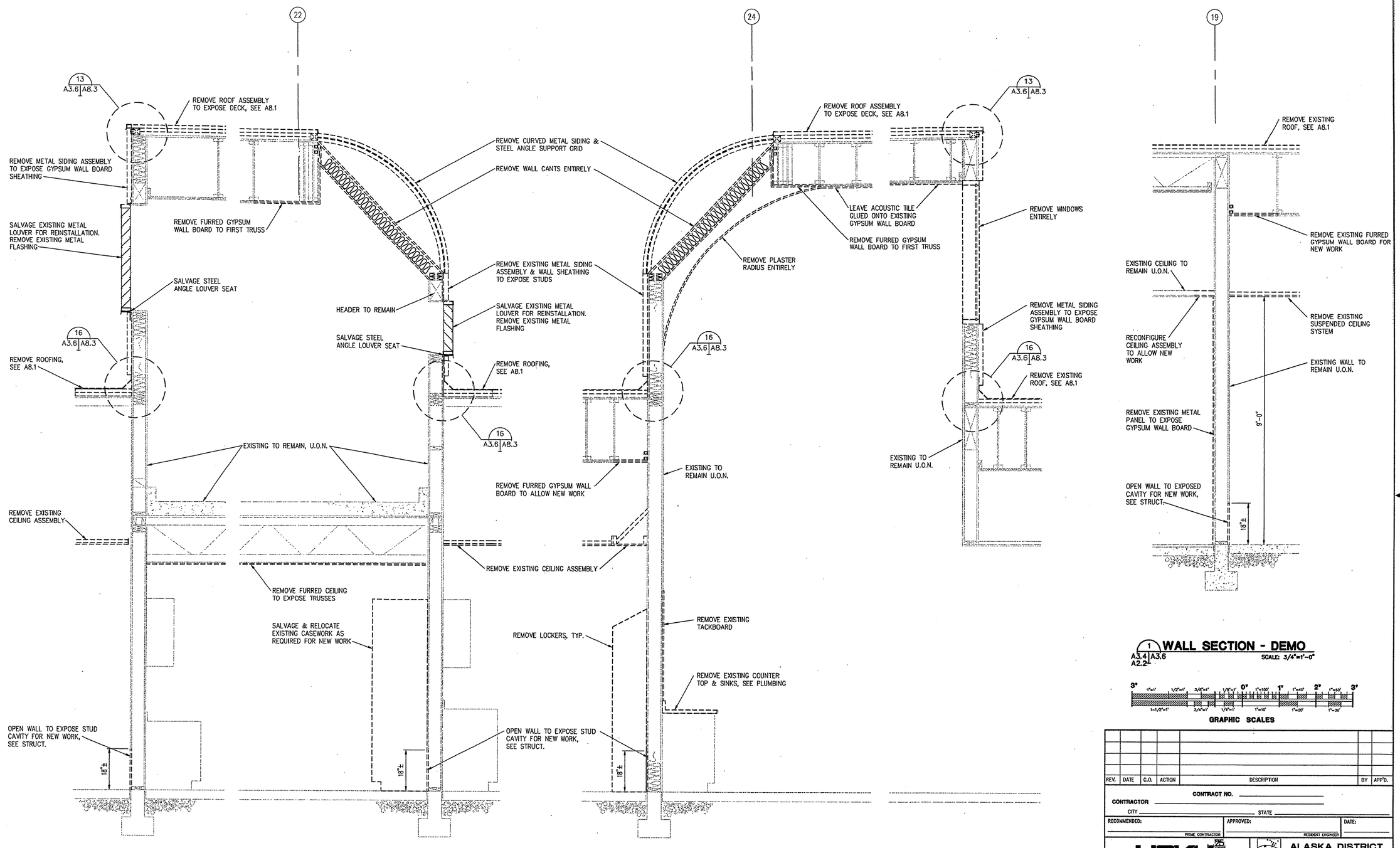

5 WALL SECTION - DEMO
A3.4 A3.6 A2.2 SCALE: 3/4"=1'-0"

4 WALL SECTION - DEMO
A3.4 A3.6 A2.2 SCALE: 3/4"=1'-0"

3 WALL SECTION - DEMO
A3.4 A3.6 A2.2 SCALE: 3/4"=1'-0"

2 WALL SECTION - DEMO
A3.4 A3.6 A2.2 SCALE: 3/4"=1'-0"

1 WALL SECTION - DEMO
A3.4 A3.6 A2.2 SCALE: 3/4"=1'-0"

GRAPHIC SCALES

REV.	DATE	C.O.	ACTION	DESCRIPTION	BY	APP'D.

CONTRACT NO.

CONTRACTOR

CITY STATE

RECOMMENDED: PRIME CONTRACTOR | APPROVED: RESIDENT ENGINEER | DATE:

USKH A quarter century of design for Alaskans

ALASKA DISTRICT
CORPS OF ENGINEERS
ANCHORAGE, ALASKA

DESIGNED: HAP
DRAWN: MAF
TRACED:
CHECKED: JAH
SUBMITTED:
DI. SECT.

BEN EIELSON JR./SR. HIGH SCHOOL – PHASE 3
EIELSON AIR FORCE BASE, ALASKA
ARCHITECTURAL

WALL SECTIONS

RECOMMENDED: CHIEF, MILITARY TECHNICAL ENGINEERING BRANCH | APPROVED: CHIEF ENGINEERING DIVISION | DATE:

SCALE: AS SHOWN | SPEC. NO.

DRAWING NUMBER 29-02-38

SHEET OF

REFERENCE NO. A3.6

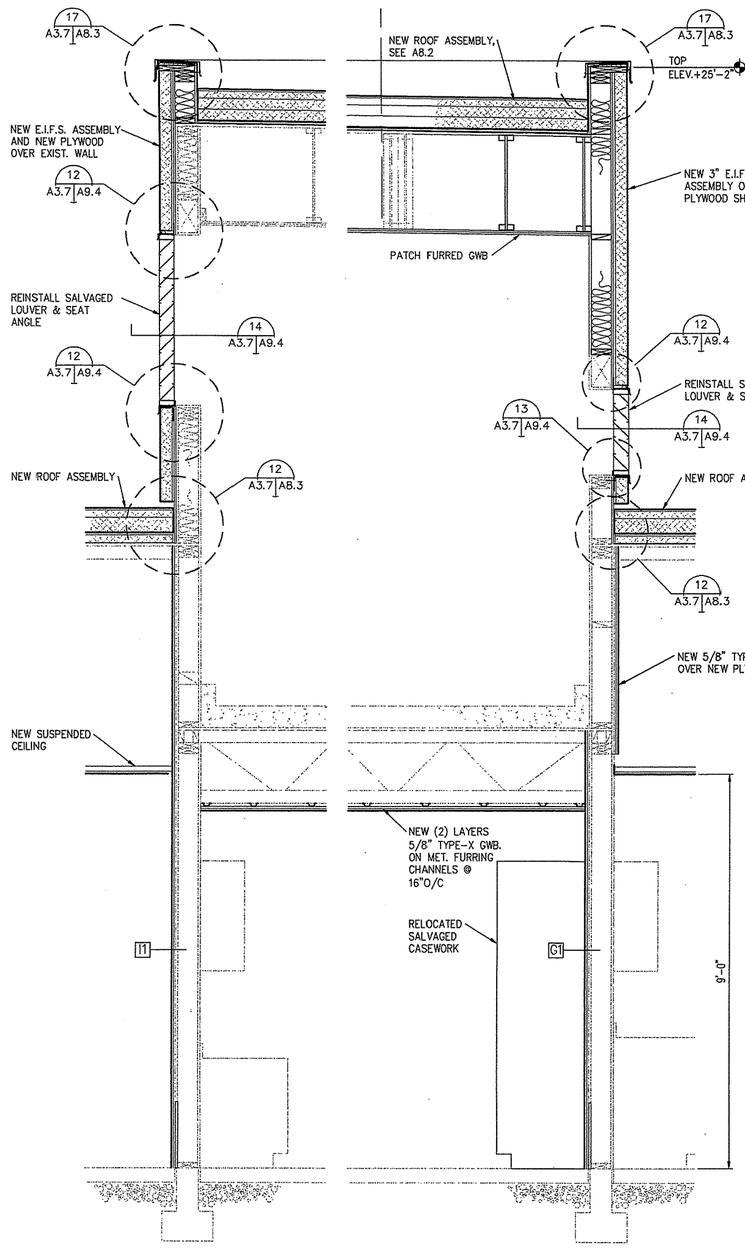

5 WALL SECTION - NEW
A3.4 A2.2 A3.7 SCALE: 3/4"=1'-0"

4 WALL SECTION - NEW
A3.4 A2.2 A3.7 SCALE: 3/4"=1'-0"

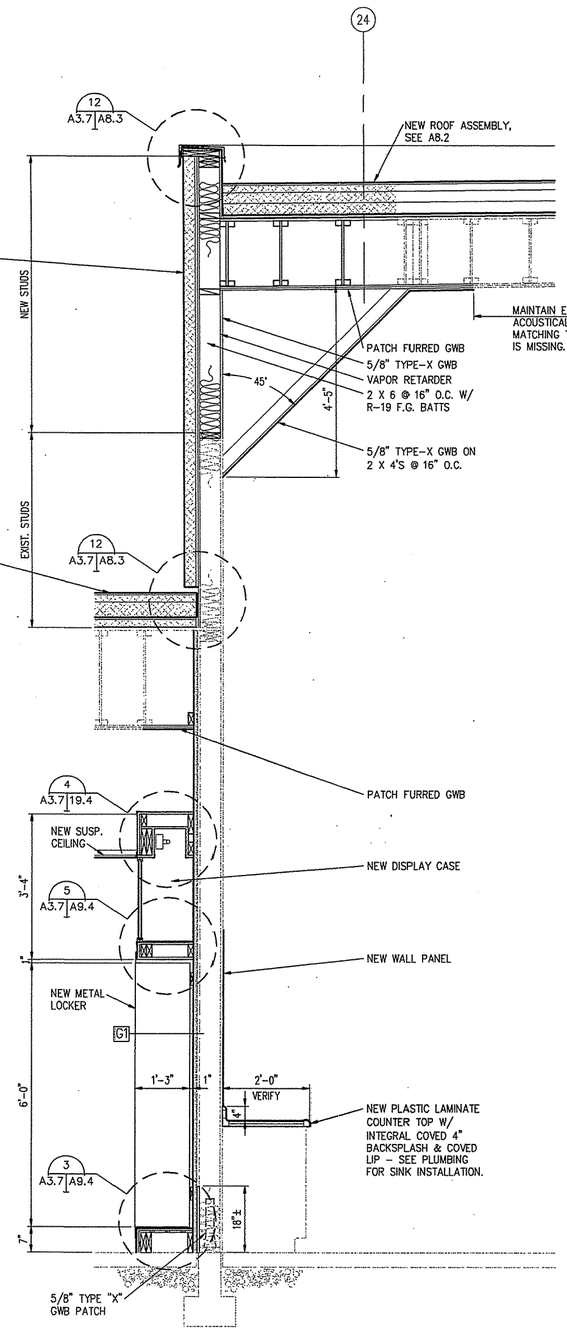

3 WALL SECTION - NEW
A3.4 A2.2 A3.7 SCALE: 3/4"=1'-0"

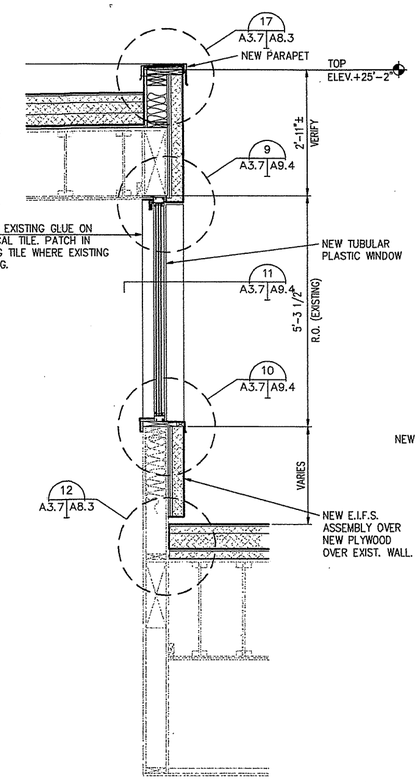

2 WALL SECTION - NEW
A3.4 A2.2 A3.7 SCALE: 3/4"=1'-0"

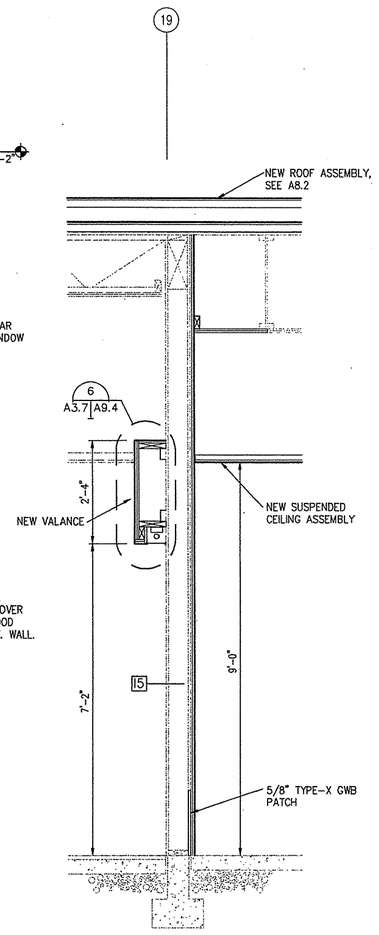

1 WALL SECTION - NEW
A3.4 A2.2 A3.7 SCALE: 3/4"=1'-0"

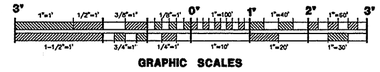

GRAPHIC SCALES

REV.	DATE	C.O.	ACTION	DESCRIPTION	BY	APP'D.

CONTRACT NO.
CONTRACTOR
CITY STATE
RECOMMENDED: PRIME CONTRACTOR
APPROVED: RESIDENT ENGINEER
DATE:

USKH A quarter century of design for Alaskans

ALASKA DISTRICT
CORPS OF ENGINEERS
ANCHORAGE, ALASKA

DESIGNED: HAP
DRAWN: MAF
TRACED:
CHECKED: JAH
SUBMITTED:
CH. SECT.

BEN EIELSON JR./SR. HIGH SCHOOL - PHASE 3
EIELSON AIR FORCE BASE, ALASKA
ARCHITECTURAL

WALL SECTIONS

RECOMMENDED: CHIEF, MILITARY TECHNICAL ENGINEERING BRANCH
APPROVED: CHIEF ENGINEERING DIVISION
DATE:
SCALE: AS SHOWN
SPEC. NO.
DRAWING NUMBER 29-02-38
SHEET OF

REFERENCE NO. A3.7

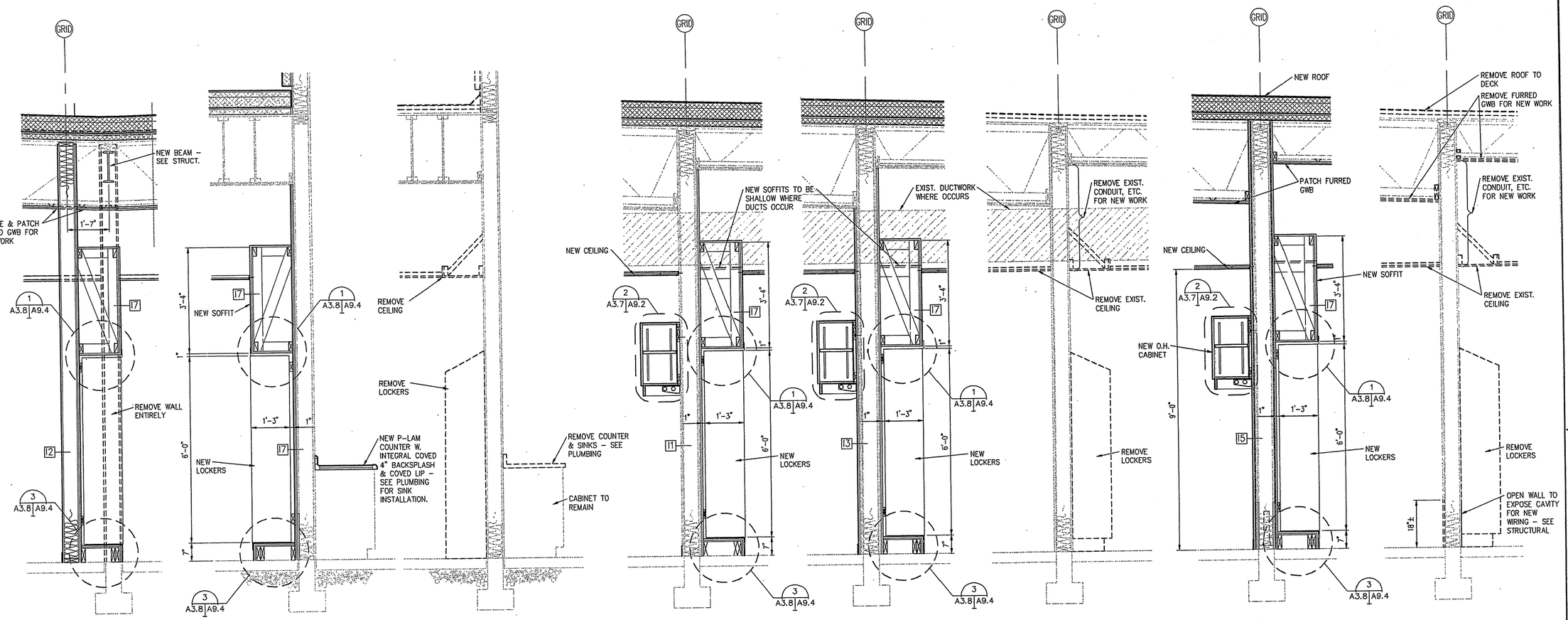

8 WALL SECTION
A3.4 A3.8 A2.2 D2.2 SCALE: 3/4"=1'-0"

7 WALL SECTION-NEW
A3.4 A3.8 A2.2 SCALE: 3/4"=1'-0"

6 WALL SECTION-DEMO
A3.4 A3.8 D2.2 SCALE: 3/4"=1'-0"

5 WALL SECTION-NEW
A3.4 A3.8 A2.2 SCALE: 3/4"=1'-0"

4 WALL SECTION-NEW
A3.4 A3.8 A2.2 SCALE: 3/4"=1'-0"

3 WALL SECTION-DEMO
A3.4 A3.8 D2.2 SCALE: 3/4"=1'-0"

2 WALL SECTION-NEW
A3.4 A3.8 A2.2 SCALE: 3/4"=1'-0"

1 WALL SECTION-DEMO
A3.4 A3.8 D2.2 SCALE: 3/4"=1'-0"

GRAPHIC SCALES

REFERENCE NO. A3.8

REV.	DATE	C.O.	ACTION	DESCRIPTION	BY	APP'D.

CONTRACT NO.

CONTRACTOR

CITY STATE

RECOMMENDED: PRIME CONTRACTOR

APPROVED: RESIDENT ENGINEER

DATE:

USKH 25 YEARS A quarter century of design for Alaskans

ALASKA DISTRICT
CORPS OF ENGINEERS
ANCHORAGE, ALASKA

DESIGNED: HAP
DRAWN: MAF
TRACED:
CHECKED: JAH
SUBMITTED:
CH. SECT.

BEN EIELSON JR./SR. HIGH SCHOOL – PHASE 3
EIELSON AIR FORCE BASE, ALASKA
ARCHITECTURAL

WALL SECTIONS

RECOMMENDED: CHIEF, MILITARY TECHNICAL ENGINEERING BRANCH

APPROVED: CHIEF ENGINEERING DIVISION

DATE:

SCALE: AS SHOWN

SPEC. NO.

DRAWING NUMBER 29-02-38

SHEET OF

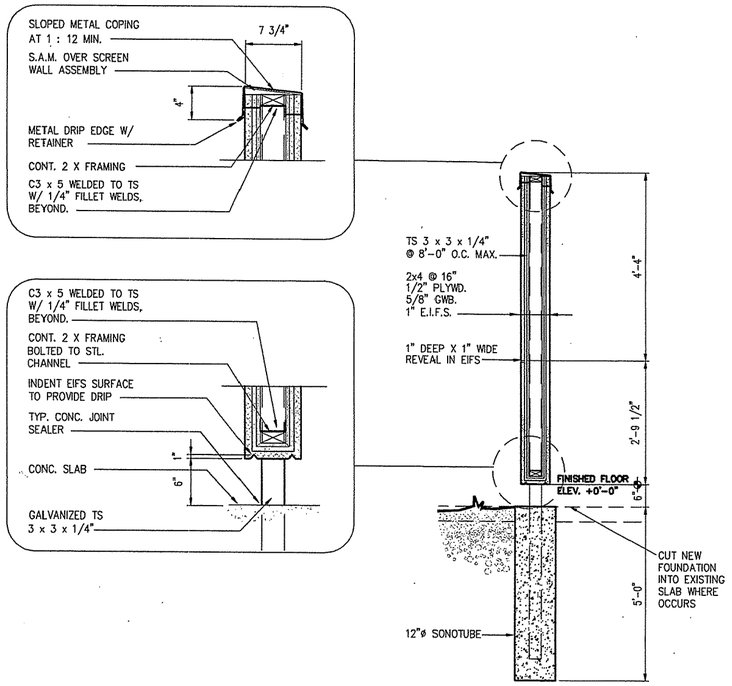

3 A2.1 A3.9 **SCREEN WALL**

SCALE: 3/4"=1'-0"

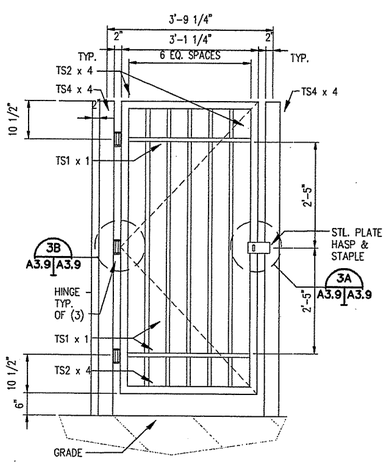

ALL JOINTS TO BE WELDED WITH 1/4" FILLET WELDS AND GROUND SMOOTH

3D A2.1 A3.9 **FENCE GATE ELEVATION**

SCALE: 3/4"=1'-0"

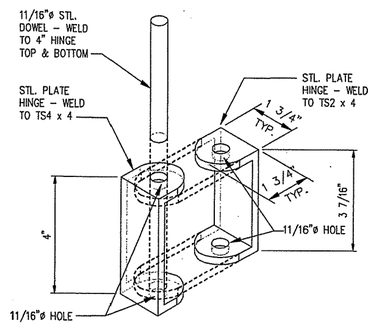

3B A3.9 A3.9 **GATE HINGE ISOMETRIC**

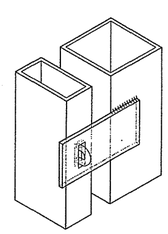

3A A3.9 A3.9 **HASP ISOMETRIC**

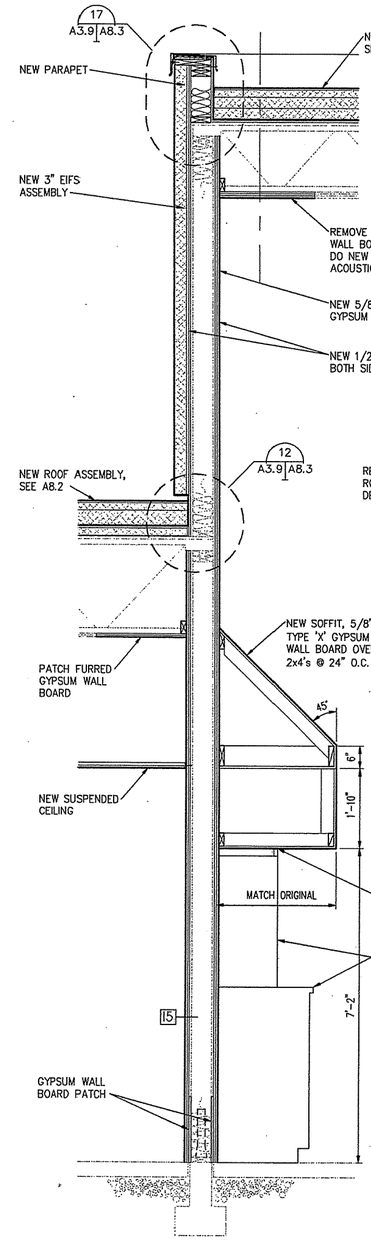

2 A2.2 A3.9 **WALL SECTION-NEW**

SCALE: 3/4"=1'-0"

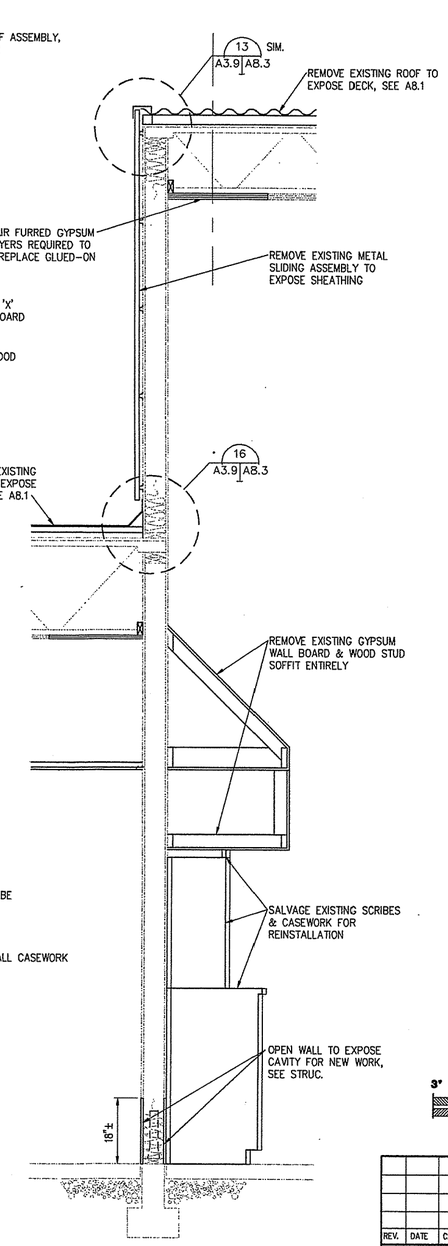

1 D2.2 A3.9 **WALL SECTION-DEMO**

SCALE: 3/4"=1'-0"

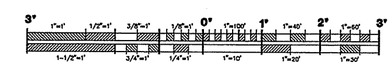

GRAPHIC SCALES

REV.	DATE	C.O.	ACTION	DESCRIPTION	BY	APP'D.

CONTRACT NO. _____

CONTRACTOR _____

CITY _____ STATE _____

RECOMMENDED: PRIME CONTRACTOR | APPROVED: RESIDENT ENGINEER | DATE:

USKH — A quarter century of design for Alaskans

ALASKA DISTRICT
CORPS OF ENGINEERS
ANCHORAGE, ALASKA

DESIGNED: HAP
DRAWN: MAF
TRACED:
CHECKED: JAH
SUBMITTED:
QC: SECT.

BEN EIELSON JR./SR. HIGH SCHOOL – PHASE 3
EIELSON AIR FORCE BASE, ALASKA
ARCHITECTURAL

WALL SECTIONS & DETAILS

RECOMMENDED: CHIEF, MILITARY TECHNICAL ENGINEERING BRANCH | APPROVED: CHIEF ENGINEERING DIVISION | DATE:

SCALE: AS SHOWN | SPEC. NO.

DRAWING NUMBER 29-02-38

SHEET OF

REFERENCE NO. A3.9

CORPS OF ENGINEERS

U. S. ARMY

NOTES: (ROOFS 13, 17, 21, 22, 23)

1. ALL NEW ROOFS TO BE 1/4:12 SLOPE MINIMUM, UNLESS OTHERWISE NOTED. PROVIDE UNDER MEMBRANE CRICKETS AS INDICATED AND AS NEEDED TO DRAIN ROOF, PONDING WATER IS NOT ALLOWED.
2. FIELD VERIFY ALL EXISTING ROOF SLOPES. PROVIDE UNDER MEMBRANE CRICKETS AS INDICATED, AS NEEDED AND AT ALL CURB MOUNTED FEATURES TO DRAIN ROOF. PONDING WATER IS NOT ALLOWED.
3. FIELD VERIFY ELEVATIONS, SQUARE FOOTAGE'S AND DIMENSIONS.
4. REPLACE ALL EXISTING ROOF DRAINS (RD). COORDINATE WITH STRUCTURAL. PROVIDE NEW OVERFLOW ROOF DRAINS (ORD) AND OVERFLOW SCUPPERS (OFS) AS INDICATED. ORD AND OFS TO BE PLACED 2" HIGHER THAN PRIMARY DRAINS AND SCUPPERS. PROVIDE NEW EMERGENCY OVERFLOW SCUPPERS (EOFS) AS INDICATED. COORDINATE LOCATION OF ALL SCUPPERS WITH ARCHITECTURAL ELEVATIONS.
5. COORDINATE QUANTITY, TYPE AND SIZE OF ROOF PENETRATIONS WITH ALL OTHER DISCIPLINES.
6. ▽20" INDICATES ROOF PENETRATION (20"x20" DUCT). COORDINATE WITH MECHANICAL.
7. EPS CRICKETS: PRIOR TO FABRICATION VERIFY THAT HIGH POINTS ARE COORDINATED WITH PARAPET HEIGHTS. CRICKET VALLEYS DESIGNED AT 45° FOR MAXIMUM SLOPE, U.O.N.
8. AT VTR AND OTHER ROUND LG PENETRATIONS, CUT ROUND HOLE IN LG.
9. SEE MECHANICAL FOR QUANTITY AND SIZE OF NEW VTR'S.
10. PERIMETER PAVERS AND INCIDENTAL STRAPPING NOT SHOWN AT IRMA ROOFS FOR CLARITY.
12. PROVIDE 64"x64" PAVER AREA AT PENTHOUSE DOOR ON ROOF 21.
13. SEE STRUCTURAL FOR DRAG STRUTS ON ROOF 21 DECK.
14. ROOF 17 IS OPTION H. SEE A2.1 FOR OPTION INFORMATION.
15. EXISTING ROOF-MOUNTED CONDENSORS AT APPROXIMATE LOCATION GRID K BETWEEN GRIDS 15 AND 16 TO BE REMOVED. SEE DETAIL 9/A8.4.

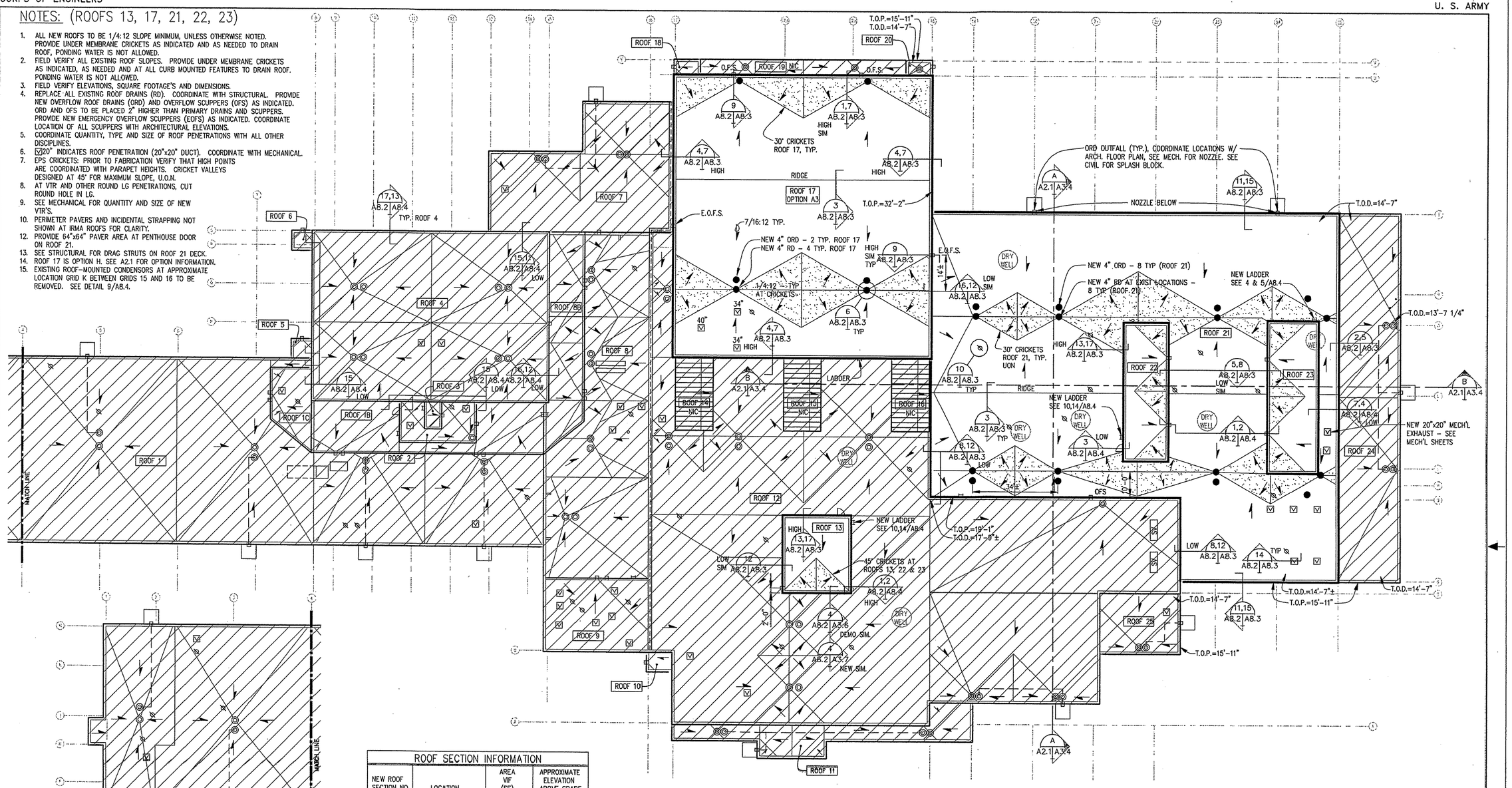

ROOF SECTION INFORMATION			
NEW ROOF SECTION NO.	LOCATION	AREA VIF (SF)	APPROXIMATE ELEVATION ABOVE GRADE
1	NIC	21,324	12'
2	NIC	447	23'
3	NIC	78	30'
4	NIC	6,898	30'
5	NIC	70	12'
6	NIC	70	12'
7	NIC	3,244	15'
8	NIC	6,088	15'
9	NIC	1,301	18'
10	NIC	41	15'
11	NIC	1,013	15'
12	NIC	22,394	19'
13 *	PENTHOUSE	911	28'
14	NIC	463	28'
15	NIC	463	28'
16	NIC	463	28'
17 *	GYM (AREA 'C')	12,344	33'
18	NIC	72	14'
19	NIC	528	14'
20	NIC	72	14'
21 *	AREA 'E'	19,409	15'
22 *	FAN ROOM	1,056	24'
23 *	CLERESTORY	1,311	24'
24	NIC	3,817	15'
25	NIC	829	15'

* PHASE 3 WORK (PLUS SOME WORK AT ROOF 4 AREA)

1 A8.2 NEW ROOF PLAN
SCALE: 1/16" = 1'-0"

UNDER MEMBRANE CRICKETS - APPROX. LOCATION & SIZE

NIC ROOF AREAS U.O.N.

GRAPHIC SCALES

REFERENCE NO. A8.2

REV.	DATE	C.O.	ACTION	DESCRIPTION	BY	APP'D.

CONTRACT NO.

CONTRACTOR

CITY STATE

RECOMMENDED: PRIME CONTRACTOR

APPROVED: RESIDENT ENGINEER

DATE:

USKH — A quarter century of design for Alaskans

ALASKA DISTRICT
CORPS OF ENGINEERS
ANCHORAGE, ALASKA

DESIGNED: HAP
DRAWN: RWP
TRACED:
CHECKED: JAH
SUBMITTED:
CH. SECT.

BEN EIELSON JR./SR. HIGH SCHOOL - PHASE 3
EIELSON AIR FORCE BASE, ALASKA
ARCHITECTURAL

NEW ROOF PLAN

RECOMMENDED: CHIEF, MILITARY TECHNICAL ENGINEERING BRANCH

APPROVED: CHIEF ENGINEERING DIVISION

DATE:

SCALE: 1/16" = 1'-0"

SPEC. NO.

DRAWING NUMBER 29-02-38

SHEET OF

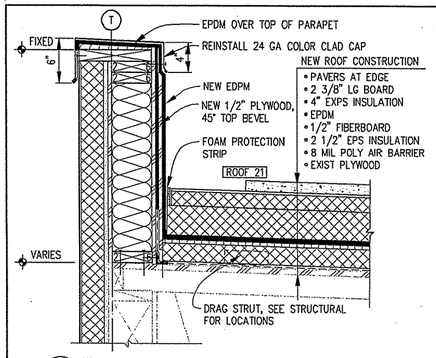

15 PARAPET - NEW
A8.2 A8.3 — ROOF 21 — SCALE: 1 1/2"=1'-0"

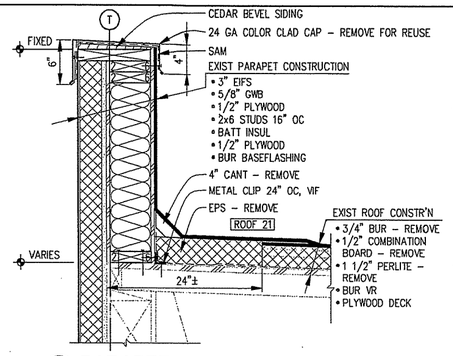

11 PARAPET - EXIST
A8.2 A8.3 — ROOF 21 — SCALE: 1 1/2"=1'-0"

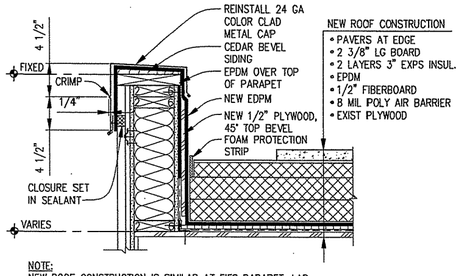

NOTE:
NEW ROOF CONSTRUCTION IS SIMILAR AT EIFS PARAPET. LAP EPDM OVER PARAPET & ONTO EIFS SIMILAR TO METAL SIDING.

7 PARAPET - NEW
A8.2 A8.3 — ROOF 17 — SCALE: 1 1/2"=1'-0"

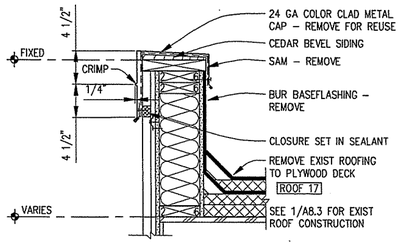

4 PARAPET - EXIST
A8.2 A8.3 — ROOF 17 — SCALE: 1 1/2"=1'-0"

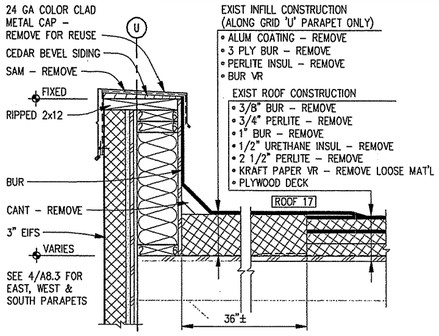

1 PARAPET - EXIST
A8.2 A8.3 — ROOF 17 (GRID 'U') — SCALE: 1 1/2"=1'-0"

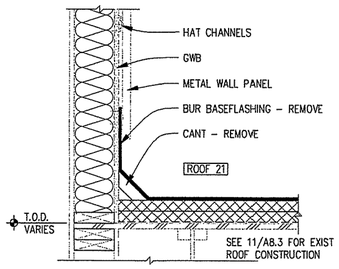

16 SIDEWALL - EXIST
A8.2 A8.3 — ROOF 21 — SCALE: 1 1/2"=1'-0"

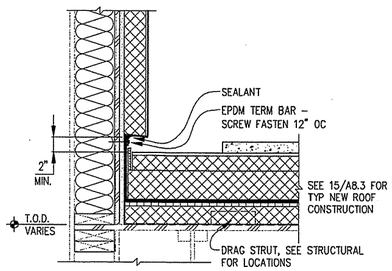

12 SIDEWALL - NEW
A8.2 A8.3 — ROOF 21 — SCALE: 1 1/2"=1'-0"

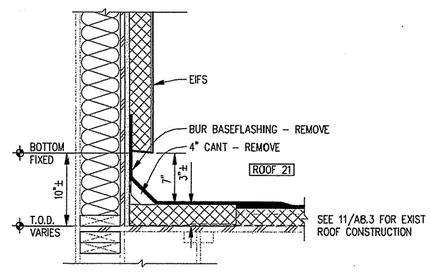

8 SIDEWALL - EXIST
A8.2 A8.3 — ROOF 21 — SCALE: 1 1/2"=1'-0"

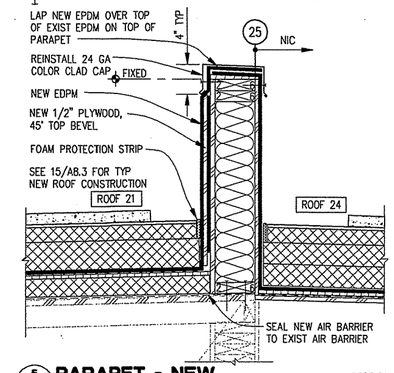

5 PARAPET - NEW
A8.2 A8.3 — ROOF 21 — SCALE: 1 1/2"=1'-0"

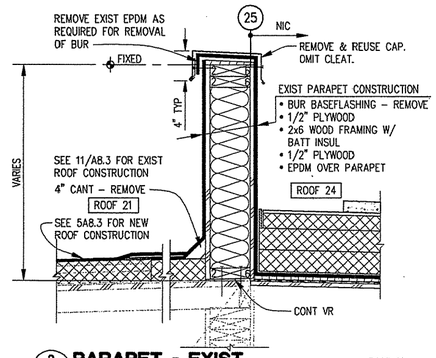

2 PARAPET - EXIST
A8.2 A8.3 — ROOF 21 — SCALE: 1 1/2"=1'-0"

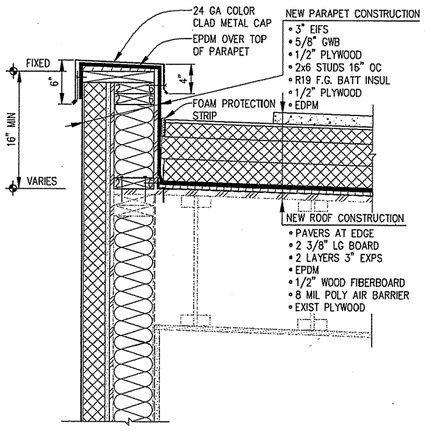

17 PARAPET - NEW
A8.2 A8.3 — ROOFS 13, 22, 23 — SCALE: 1 1/2"=1'-0"

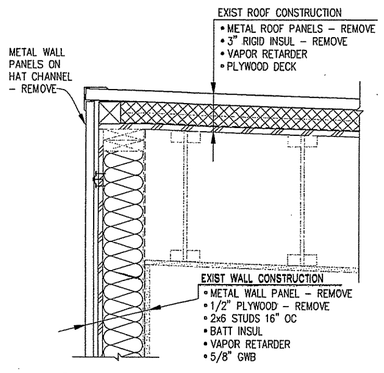

13 EDGE - EXIST
A8.2 A8.3 — ROOFS 13, 22, 23 — SCALE: 1 1/2"=1'-0"

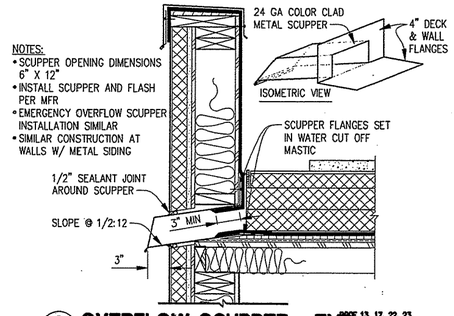

NOTES:
- SCUPPER OPENING DIMENSIONS 6" X 12"
- INSTALL SCUPPER AND FLASH PER MFR
- EMERGENCY OVERFLOW SCUPPER INSTALLATION SIMILAR
- SIMILAR CONSTRUCTION AT WALLS W/ METAL SIDING

9 OVERFLOW SCUPPER - TYP
A8.2 A8.3 — ROOF 13, 17, 22, 23 ROOF 21 SYM. — SCALE: 1 1/2"=1'-0"

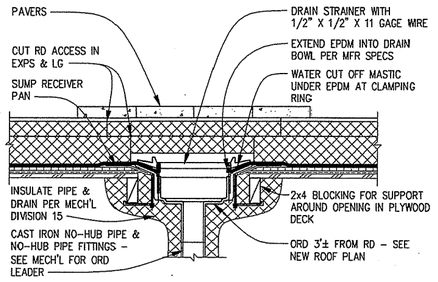

6 RD / ORD - TYP
A8.2 A8.3 — ROOF 17 — SCALE: 1 1/2"=1'-0"

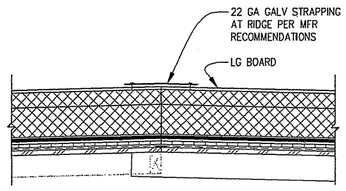

3 RIDGE SECUREMENT - TYP
A8.2 A8.3 — ROOF 13, 17, 22, 23 ROOF 21 SYM. — SCALE: N.T.S.

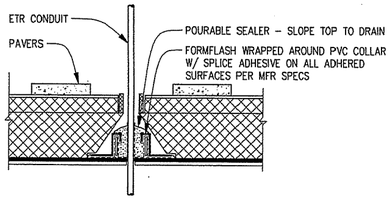

18 ETR - NEW
GEN. A8.3 — ROOF 13, 17, 22, 23 ROOF 21 SYM. — SCALE: 1 1/2"=1'-0"

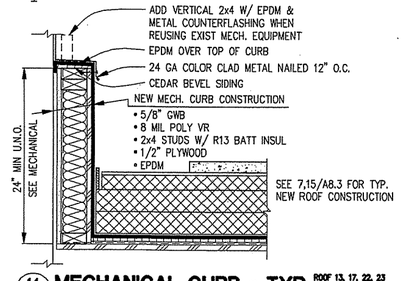

14 MECHANICAL CURB - TYP
A8.2 A8.3 — ROOF 13, 17, 22, 23 ROOF 21 SYM. — SCALE: 1 1/2"=1'-0"

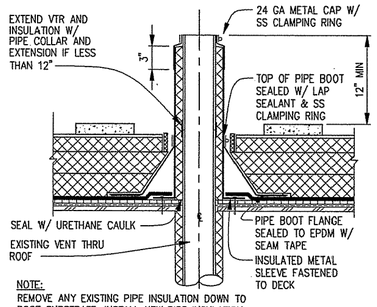

NOTE:
REMOVE ANY EXISTING PIPE INSULATION DOWN TO ROOF SUBSTRATE. INSTALL NEW PIPE INSULATION OVER EXISTING VTR.

10 VTR - TYP
A8.2 A8.3 — ROOF 13, 17, 22, 23 ROOF 21 SYM. — SCALE: 1 1/2"=1'-0"

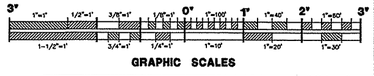

GRAPHIC SCALES

REFERENCE NO. A8.3

REV.	DATE	C.O.	ACTION	DESCRIPTION	BY	APP'D.

CONTRACT NO.
CONTRACTOR
CITY STATE

RECOMMENDED: PRIME CONTRACTOR
APPROVED: RESIDENT ENGINEER
DATE:

USKH — A quarter century of design for Alaskans

ALASKA DISTRICT
CORPS OF ENGINEERS
ANCHORAGE, ALASKA

DESIGNED: HAP
DRAWN: RWP
TRACED:
CHECKED: JAH
SUBMITTED:
DI. SEC.

BEN EIELSON JR./SR. HIGH SCHOOL – PHASE 3
EIELSON AIR FORCE BASE, ALASKA
ARCHITECTURAL

ROOF DETAILS

RECOMMENDED: CHIEF, MILITARY TECHNICAL ENGINEERING BRANCH
APPROVED: CHIEF ENGINEERING DIVISION
DATE:

SCALE: AS SHOWN
SPEC. NO.
DRAWING NUMBER 29-02-38
SHEET OF

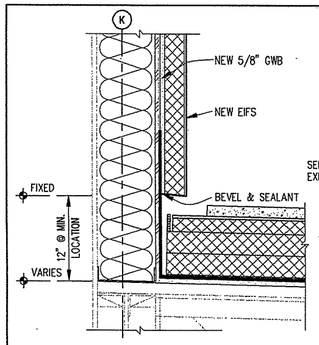

15 SIDEWALL - NEW
A8.2|A8.4
ROOFS 1, 1B, 1C, 2, 5, 6, 7
SCALE: 1 1/2"=1'-0"

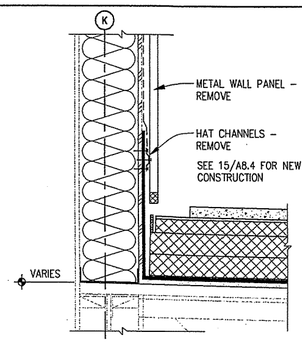

11 SIDEWALL - EXISTING
A8.2|A8.4
ROOFS 1, 1B, 1C, 2, 5, 6, 7
SCALE: 1 1/2"=1'-0"

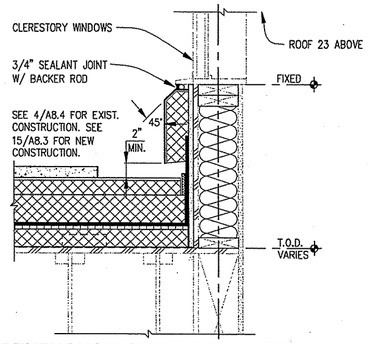

7 PENTHOUSE SIDEWALL - NEW
A8.2|A8.4
ROOF 21
SCALE: 1 1/2"=1'-0"

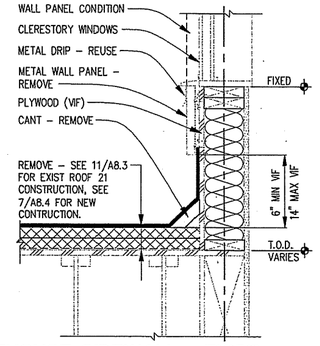

4 PENTHOUSE SIDEWALL - EXIST
A8.2|A8.4
ROOF 21
SCALE: 1 1/2"=1'-0"

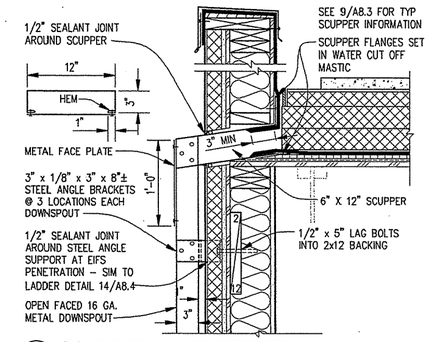

1 SCUPPER/DOWNSPOUT
A8.2|A8.4
ROOFS 13, 22, 23
SCALE: 1 1/2"=1'-0"

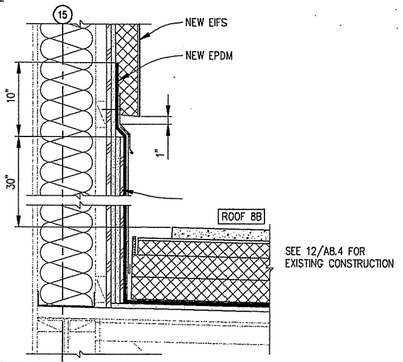

16 SIDEWALL - NEW
A8.2|A8.4
ROOF 8B
SCALE: 1 1/2"=1'-0"

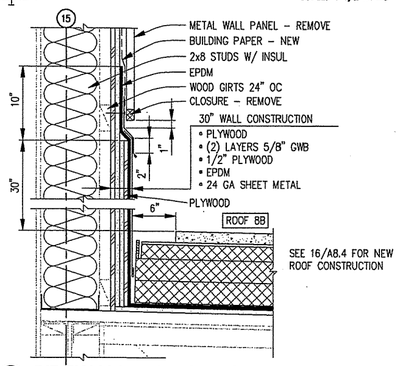

12 SIDEWALL - EXISTING
A8.2|A8.4
ROOF 8B
SCALE: 1 1/2"=1'-0"

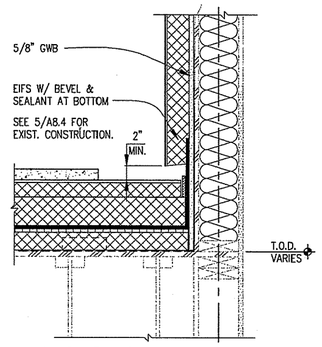

8 PENTHOUSE SIDEWALL - NEW
A8.2|A8.4
BELOW ROOF 13
SCALE: 1 1/2"=1'-0"

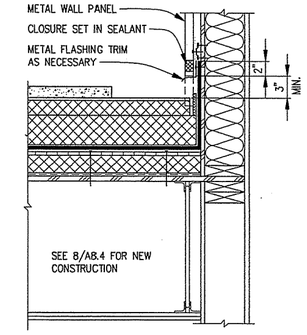

5 PENTHOUSE SIDEWALL - EXIST
A8.2|A8.4
BELOW ROOF 13
SCALE: 1 1/2"=1'-0"

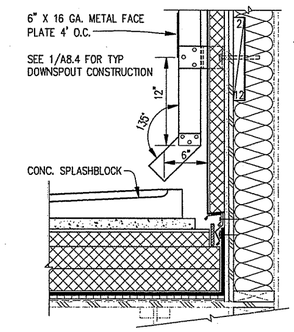

2 DOWNSPOUT/SPLASHBLOCK
A8.2|A8.4
ROOF 21
SCALE: 1 1/2"=1'-0"

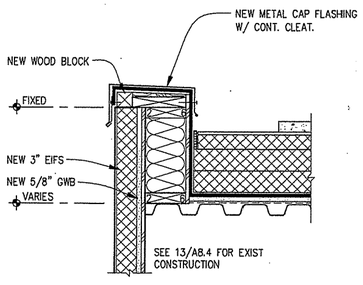

17 PARAPET - NEW
A8.2|A8.4
ROOF 4
SCALE: 1 1/2"=1'-0"

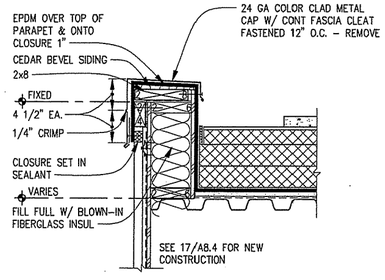

13 PARAPET - EXISTING
A8.2|A8.4
ROOF 4
SCALE: 1 1/2"=1'-0"

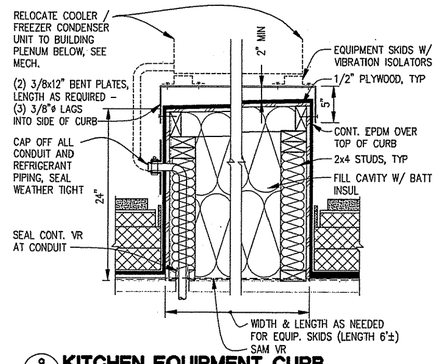

9 KITCHEN EQUIPMENT CURB
A8.4|A8.2
SCALE: 1 1/2"=1'-0"

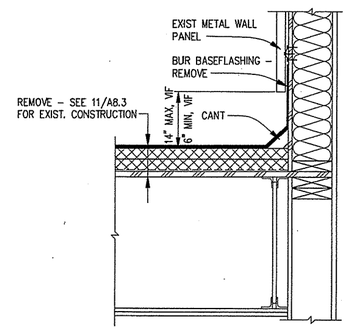

6 SIDEWALL - EXIST
A8.2|A8.4
ROOF 21
SCALE: 1 1/2"=1'-0"

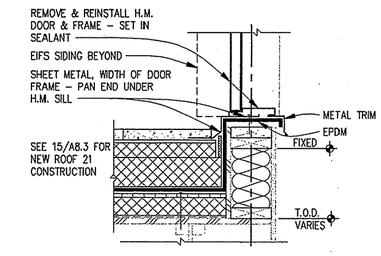

3 DOOR SILL - NEW
A8.2|A8.4
ROOF 21
SCALE: 1 1/2"=1'-0"

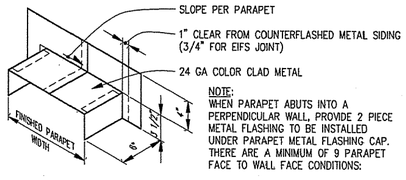

NOTE:
WHEN PARAPET ABUTS INTO A PERPENDICULAR WALL, PROVIDE 2 PIECE METAL FLASHING TO BE INSTALLED UNDER PARAPET METAL FLASHING CAP. THERE ARE A MINIMUM OF 9 PARAPET FACE TO WALL FACE CONDITIONS:

EIFS TO EIFS REQUIRING A SEALANT JOINT. AT TOP OF PARAPET ENDS, PROVIDE METAL FLASHING PER THIS DETAIL. WRAP EPDM OVER PARAPET TOP, ADD PARAPET CAP METAL.

18 TRANSITION DETAIL - NEW
A8.2|A8.4
GENERAL
SCALE: 1 1/2"=1'-0"

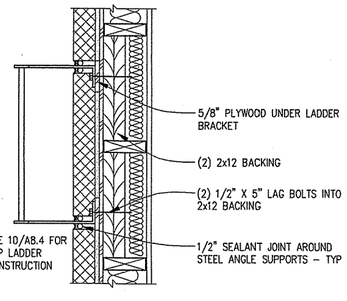

14 LADDER ATTACHMENT
A8.2|A8.4
@ EIFS WALL
SCALE: 1 1/2"=1'-0"

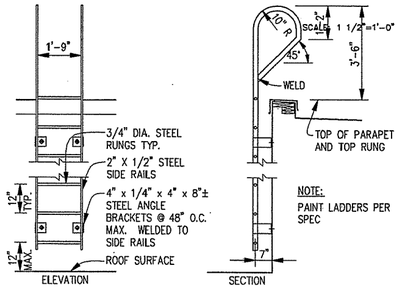

NOTE:
PAINT LADDERS PER SPEC

10 LADDER - NEW
A8.2|A8.4
TO ROOFS 13, 22, 23
SCALE: N.T.S.

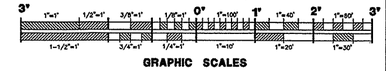

GRAPHIC SCALES

REFERENCE NO. A8.4

REV.	DATE	C.O.	ACTION	DESCRIPTION	BY	APP'D.

CONTRACT NO. _____

CONTRACTOR _____

CITY _____ STATE _____

RECOMMENDED: PRIME CONTRACTOR | APPROVED: RESIDENT ENGINEER | DATE:

USKH — A quarter century of design for Alaska

ALASKA DISTRICT
CORPS OF ENGINEERS
ANCHORAGE, ALASKA

DESIGNED: HAP
DRAWN: RWP
TRACED:
CHECKED: JAH
SUBMITTED:
CH. SECT.

BEN EIELSON JR./SR. HIGH SCHOOL - PHASE 3
EIELSON AIR FORCE BASE, ALASKA
ARCHITECTURAL

ROOF DETAILS

RECOMMENDED: CHIEF, MILITARY TECHNICAL ENGINEERING BRANCH | APPROVED: CHIEF ENGINEERING DIVISION | DATE:

SCALE: AS SHOWN | SPEC. NO.

DRAWING NUMBER 29-02-38

SHEET OF

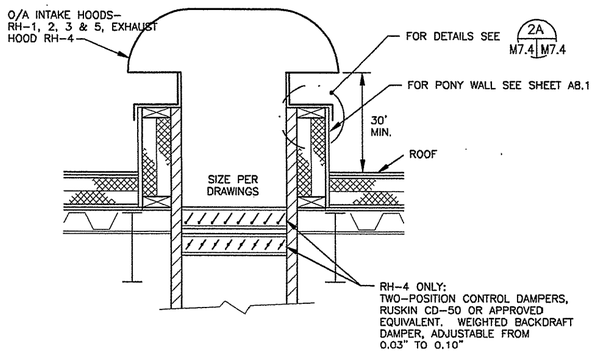

1 M7.2 M7.2 **ROOF HOOD INSTALLATION DETAIL**
SCALE: NONE

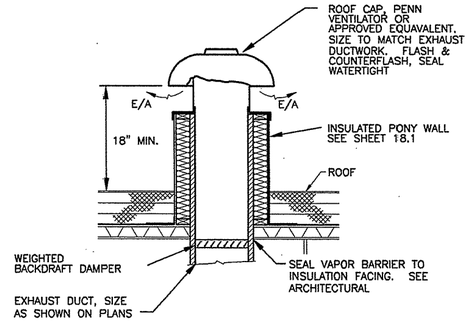

2 M7.2 M7.2 **TYPICAL EXHAUST FAN ROOF PENETRATION**
SCALE: NONE

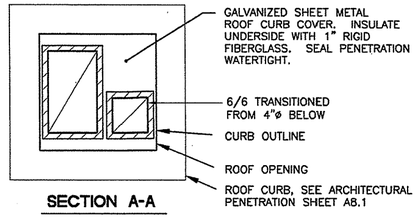

SECTION A-A

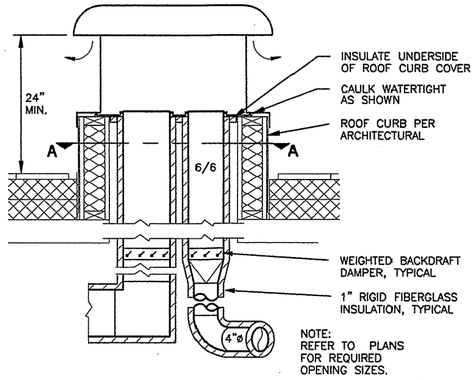

3 M7.2 M7.2 **ROOF PENETRATION DETAIL**
MULTIPLE EXHAUSTS SHOWN
SCALE: NONE

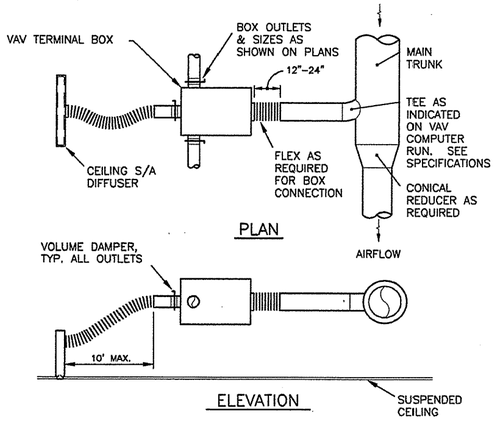

5 M7.2 M7.2 **VAVBOX/DIFFUSER DETAIL**
SCALE: NONE

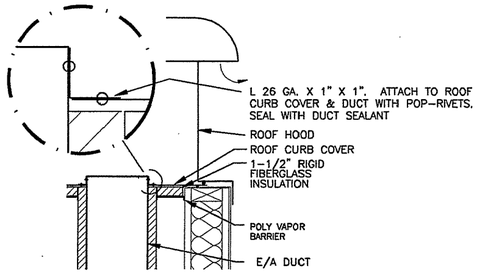

2A M7.4 M7.4 **ROOF CURB COVER INSULATION DETAIL**
SCALE: NONE

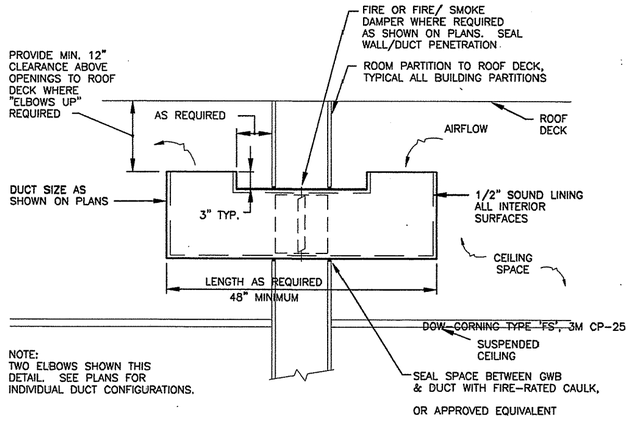

6 M7.2 M7.2 **TRANSFER DUCT DETAIL**
SCALE: NONE

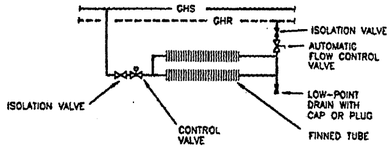

7 M7.2 M7.2 **BASEBOARD PIPING SCHEMATIC**
SCALE: NONE

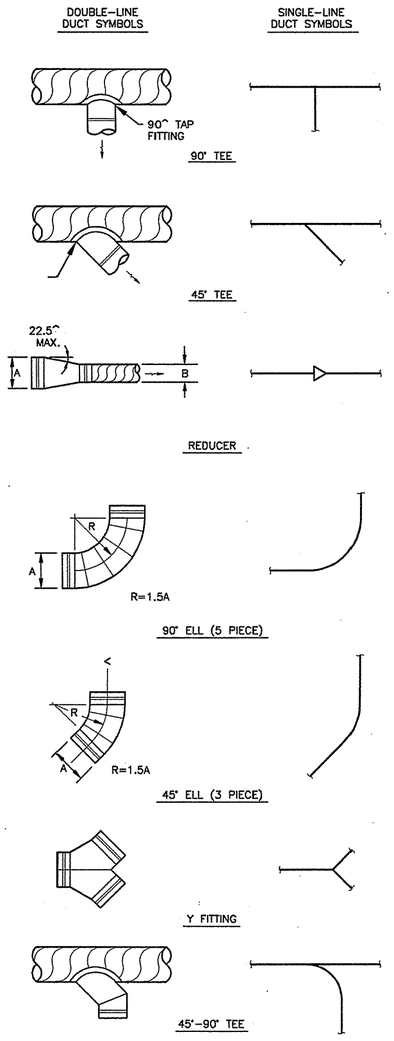

4 M7.2 M7.2 **ROUND DUCT CONSTRUCTION DETAILS**
SCALE: NONE

REV.	DATE	C.O.	ACTION	DESCRIPTION	BY	APP'D.

CONTRACT NO. _____
CONTRACTOR _____
CITY _____ STATE _____
RECOMMENDED: (PRIME CONTRACTOR) APPROVED: (RESIDENT ENGINEER) DATE:

USKH — A quarter century of design for Alaskans
ALASKA DISTRICT
CORPS OF ENGINEERS
ANCHORAGE, ALASKA

DESIGNED: SVB
DRAWN: LDS/EFH
TRACED:
CHECKED: SVB
SUBMITTED:
CK. SEC.

BEN EIELSON JR./SR. HIGH SCHOOL - PHASE 3
EIELSON AIR FORCE BASE, ALASKA
MECHANICAL
TYPICAL DETAILS

RECOMMENDED: (CHIEF, MILITARY TECHNICAL ENGINEERING BRANCH) APPROVED: (CHIEF ENGINEERING DIVISION) DATE:
SCALE: AS SHOWN SPEC. NO.
DRAWING NUMBER 29-02-38
SHEET OF

REFERENCE NO. M7.2

507202M72 (1=1)

CORPS OF ENGINEERS

U. S. ARMY

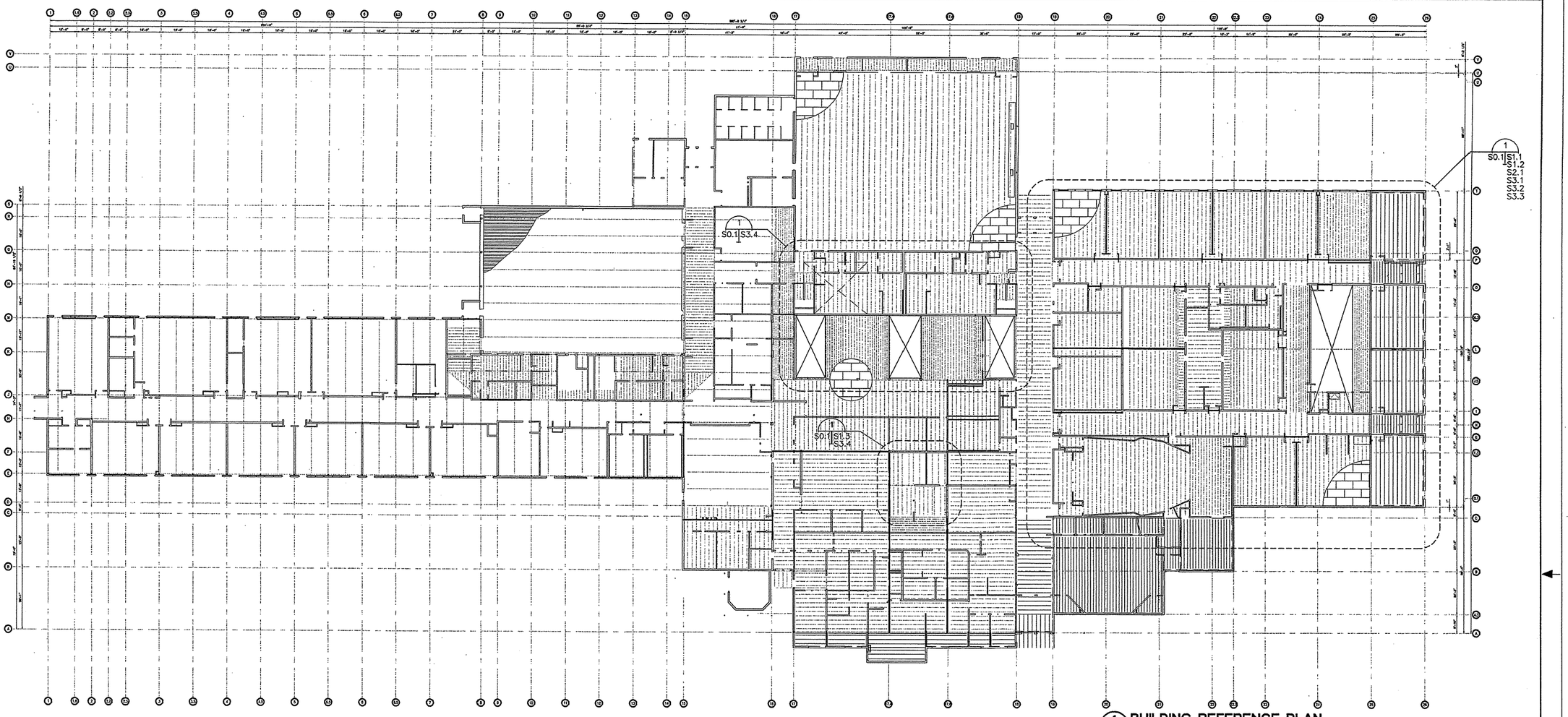

1 BUILDING REFERENCE PLAN
S0.1 S0.1
SCALE: 1"=20'-0"

GENERAL STRUCTURAL NOTES

CODE:

THIS STRUCTURE IS DESIGNED IN ACCORDANCE WITH THE 1994 UNIFORM BUILDING CODE (UBC).

GENERAL:

INFORMATION SHOWN ON THE DRAWINGS RELATING TO THE EXISTING STRUCTURE HAS BEEN ASSUMED FROM RECORD DRAWINGS, AND MAY NOT BE ACCURATE. CONTRACTOR SHALL VERIFY ALL EXISTING CONDITIONS PRIOR TO BEGINNING CONSTRUCTION. NOTIFY THE OWNER IN WRITING OF ANY DISCREPANCIES BETWEEN THE DRAWINGS AND EXISTING CONSTRUCTION PRIOR TO PROCEEDING WITH WORK.

THE CONTRACT STRUCTURAL DRAWINGS AND SPECIFICATIONS REPRESENT THE FINISHED STRUCTURE. THEY DO NOT INDICATE THE METHOD OF CONSTRUCTION. THE CONTRACTOR SHALL PROVIDE ALL MEASURES NECESSARY TO PROTECT THE STRUCTURE DURING CONSTRUCTION. SUCH MEASURES SHALL INCLUDE, BUT NOT BE LIMITED TO: BRACING, SHORING OF LOADS DUE TO CONSTRUCTION EQUIPMENT, ETC. OBSERVATION VISITS TO THE SITE BY THE STRUCTURAL ENGINEER SHALL NOT INCLUDE INSPECTION OF THE ABOVE ITEMS.

CONSTRUCTION MATERIAL SHALL BE SPREAD OUT IF PLACED ON FRAMED FLOORS OR ROOF. LOAD SHALL NOT EXCEED THE DESIGN LIVE LOAD PER SQUARE FOOT.

WHERE REFERENCE IS MADE TO VARIOUS TEST STANDARDS FOR MATERIALS, SUCH STANDARDS SHALL BE THE LATEST EDITION AND/OR ADDENDUM.

ESTABLISH AND VERIFY ALL OPENINGS AND INSERTS FOR ARCHITECTURAL, MECHANICAL, ELECTRICAL, AND PLUMBING WITH APPROPRIATE TRADES, DRAWINGS, AND SUBCONTRACTORS PRIOR TO CONSTRUCTION. DO NOT PENETRATE ANY STRUCTURAL ELEMENTS (BEAMS, COLUMNS, WALLS, SLABS, ETC.) WITHOUT PRIOR WRITTEN APPROVAL OF THE STRUCTURAL ENGINEER.

NOTES AND DETAILS ON DRAWINGS SHALL TAKE PRECEDENCE OVER GENERAL STRUCTURAL NOTES AND TYPICAL DETAILS. WHERE NO SPECIFIC DETAILS ARE SHOWN, CONSTRUCTION SHALL CONFORM TO SIMILAR WORK ON THE PROJECT.

WHERE ANY DISCREPANCIES OCCUR BETWEEN PLANS, DETAILS, GENERAL STRUCTURAL NOTES, AND SPECIFICATIONS, THE GREATER REQUIREMENTS SHALL GOVERN.

ANY ENGINEERING DESIGN PROVIDED BY OTHERS AND SUBMITTED FOR REVIEW SHALL BEAR THE SEAL OF A CIVIL OR STRUCTURAL ENGINEER REGISTERED IN THE STATE IN WHICH THE PROJECT IS LOCATED.

DESIGN LOADS:

ROOF: SNOW — 53 PSF + DRIFTING
FLOOR: EXIT FACILITIES — 100 PSF
FLOOR — 125 PSF
WIND LOADS:
DESIGN WIND SPEED — 70 MPH
EXPOSURE CATEGORY — B
IMPORTANCE FACTOR — 1.00
SEISMIC LOADS:
SEISMIC ZONE — 3
Rw OFFICE — 8
IMPORTANCE FACTOR — 1.00

FOUNDATIONS:

BEARING PRESSURES ARE 3,000 PSF FOR TOTAL VERTICAL DESIGN LOADS AND A BEARING PRESSURE OF 4,000 PSF FOR TOTAL VERTICAL LOADS PLUS WIND AND SEISMIC LOADS. REFER TO THE DRAWINGS FOR DETAILS OF EXCAVATION, BACKFILL, AND COMPACTION.

LEAN CONCRETE:

LEAN CONCRETE SHALL BE MIXED USING FINE AGGREGATE CONFORMING TO ASTM C-33. TWO SACKS OF CEMENT PER YARD, 10% AIR CONTAINMENT USING AN ADMIXTURE CONFORMING TO ASTM C-260 AND WATER. MIX WITH SUFFICIENT WATER TO PRODUCE 10" SLUMP.

CONCRETE:

MIXING AND PLACING OF CONCRETE AND SELECTION OF MATERIALS SHALL BE IN ACCORDANCE WITH THE ACI CODE, SECTION 318-83. NORMAL WEIGHT CONCRETE SHALL HAVE A MINIMUM 28 DAY COMPRESSIVE STRENGTH OF 3,000 PSI. THE CONCRETE MIX SHALL CONSIST OF COARSE AGGREGATE CONFORMING TO ASTM C 33 (3/4" MAX SIZE), TYPE "I" CEMENT, A MAXIMUM WATER/CEMENT RATIO OF 0.45 AND AIR ENTRAINMENT OF 5% (EXPOSED). ADMIXTURES MAY BE USED IN STRICT CONFORMANCE WITH THE MANUFACTURER'S RECOMMENDATIONS. ANCHOR BOLTS SHALL BE ASTM A307, 3/4" MIN. UNLESS NOTED OTHERWISE.

REINFORCING STEEL:

REINFORCING STEEL SHALL CONFORM TO ASTM A-615-82, GRADE 60. ALL REINFORCING STEEL SHALL BE DETAILED, FABRICATED, AND PLACED IN ACCORDANCE WITH ACI 318-83 AND ACI 315. HOLD IN PLACE WITH CURED CONCRETE BLOCKS OR CHAIRS. MINIMUM COVER FOR REINFORCING STEEL SHALL BE:

CONCRETE PLACED AGAINST EARTH — 3"
FORMED SURFACE — 1 1/2"
INTERIOR EXPOSED SURFACE — 3/4"

FOR CONTINUOUS REINFORCING, USE A MINIMUM LAP SPLICE FOR:

BAR SIZE	3,000 PSI
#4	20"
#5	20"
#6	22"

STRUCTURAL STEEL:

STRUCTURAL STEEL SHALL BE DETAILED, FABRICATED, AND ERECTED IN ACCORDANCE WITH THE AMERICAN INSTITUTE OF STEEL CONSTRUCTION (AISC) MANUAL, 9TH EDITION. STRUCTURAL STEEL SHALL CONFORM TO ASTM A572, GRADE 50. TUBE STEEL SECTIONS SHALL BE ASTM A500, GRADE B. BOLTS SHALL BE 3/4"ø, ASTM A325, UNLESS NOTED OTHERWISE. ALL WELDS SHALL BE 3/16" MINIMUM, UNLESS NOTED OTHERWISE, AND SHALL BE BY CERTIFIED WELDERS USING ELECTRODES CONFORMING TO ASTM A-233, CLASS E70. APPLY ONE COAT OF PRIMER PAINT CONFORMING WITH THE STEEL STRUCTURE PAINTING COUNCIL (SSPC) TO ALL STEEL MEMBERS EXCEPT THOSE SECTIONS TO BE EMBEDDED IN CONCRETE. PROVIDE SHOP DRAWINGS WITH DETAILS FOR REVIEW.

LIGHT GAGE STEEL FRAMING:

ALL METAL STUDS, JOISTS, AND ACCESSORIES SHALL BE DESIGNED IN ACCORDANCE WITH THE "AMERICAN IRON AND STEEL INSTITUTE SPECIFICATION FOR DESIGN OF COLD-FORMED STEEL STRUCTURAL MEMBERS", 1986 EDITION. MEMBERS SHALL BE ASTM A446, GRADE D (Fy=50 KSI) FOR 14 AND 16 GAGE, AND ASTM A446, GRADE A (Fy=33 KSI) FOR 18 GAGE AND LIGHTER. FASTENERS SHALL BE #10 SELF DRILLING, SELF TAPPING SCREWS, OR AS INDICATED ON THE DRAWINGS. PROVIDE SHOP DRAWINGS WITH DETAILS FOR REVIEW.

PLYWOOD:

PLYWOOD PANELS SHALL BE STAMPED WITH THE 'APA' GRADE TRADEMARK OF THE AMERICAN PLYWOOD ASSOCIATION AND SHALL MEET U.S. PRODUCT STANDARDS P.S. 1-83. ALL PLYWOOD SHALL BE EXPOSURE 1.

ROOF SHEATHING SHALL BE APA 3/4", C-D, PANEL IDENTIFICATION INDEX 48/24. INSTALL WITH FACE GRAIN PERPENDICULAR TO SUPPORTS. STAGGER END PANEL JOINTS. NAIL ALL SUPPORTED PANEL EDGES WITH 10d NAILS AT 4" O.C. AND INTERMEDIATE SUPPORTS WITH 10d NAILS AT 12" O.C., UNLESS NOTED OTHERWISE.

WALL SHEATHING SHALL BE APA 1/2", C-D PANEL IDENTIFICATION INDEX 32/16. STAGGER END PANEL JOINTS. ALL PANEL EDGES SHALL BE BLOCKED WITH 2" NOMINAL OR WIDER WOOD FRAMING. WHERE PANELS ARE APPLIED ON BOTH FACES OF A WALL, PANEL JOINTS SHALL BE OFFSET TO FALL ON DIFFERENT FRAMING MEMBERS. NAIL ALL PANEL EDGES PER SHEAR WALL SCHEDULE.

DIMENSIONAL LUMBER:

ALL DIMENSIONAL LUMBER SHALL CONFORM TO WESTERN WOODS PRODUCTS ASSOCIATION GRADING RULES FOR HEM-FIR. MINIMUM GRADE FOR NOMINAL 2" AND 4" LUMBER SHALL BE NO. 2, Fb=1,000 PSI SINGLE MEMBER USE; BEAMS AND STRINGERS SHALL BE NO. 1, Fb = 1,050 PSI; POSTS AND TIMBERS SHALL BE NO. 1, Fb = 975 PSI. ALL LUMBER SHALL BE DELIVERED TO THE SITE WITH A MOISTURE CONTENT OF 19% OR LESS AND SHALL BE PROTECTED FROM THE WEATHER TO PREVENT ANY MOISTURE GAIN. STORE ALL LUMBER ON DUNNAGE TO PREVENT CONTACT THE THE GROUND. PRESERVATIVE TREATED LUMBER SHALL BE TREATED IN CONFORMANCE WITH THE AMERICAN LUMBER STANDARDS COMMITTEE (ALSC), SPECIFICATION C-2.

GLUE LAMINATED TIMBERS:

GLUED LAMINATED TIMBERS SHALL COMPLY WITH THE AMERICAN INSTITUTE OF TIMBER CONSTRUCTION STANDARD 103-79 "STANDARD SPECIFICATIONS FOR STRUCTURAL GLUED LAMINATED TIMBER". COMBINATIONS SHALL BE 22F-V4. SHIPPING PROTECTION SHALL CONFORM TO AITC STANDARD 11-65. PROVIDE UNITS WITH A CAMBER OF 1/780 OF THE SPAN LENGTH.

DIMENSIONAL LUMBER:

WOOD FRAMING SHALL CONFORM TO STANDARD BUILDING PRACTICE PER THE 1994 UNIFORM BUILDING CODE (94 UBC). SPACING OF ANCHOR BOLTS PER DETAIL 5/S4.1 TYP. MINIMUM SPACING 8" OR DEPTH OF EMBEDMENT WHICH EVER IS GREATER AND MAXIMUM SPACING 24". EXPANSION OR EPOXY BOLTS CAN BE USED FOR ANCHOR BOLTS BUT NOT AT THE HOLD DOWNS, USE ALL THREAD W/ EPOXY AT HOLD DOWN LOCATIONS. COATINGS OF ANCHOR BOLTS AND ALL THREAD NOT REQUIRED.
FIRE BLOCKING REQUIRED IN ALL FRAMING AT 10' UNLESS NOTED OTHERWISE. STAINLESS NAILS REQUIRED ON EXTERIOR WALL FRAMING ONLY. PNEUMATIC NAILERS WILL BE ALLOWED IF THEY MEET THE LOAD REQUIREMENTS OF THE HAND DRIVEN EQUALIVENT, VINYAL COATED "SINKERS" SHALL NOT BE USED.

THE CONTRACTOR SHALL REVIEW, STAMP WITH HIS APPROVAL, DATE, AND SIGN ALL SHOP DRAWINGS REQUIRED BY THE CONTRACT DOCUMENTS PRIOR TO SUBMITTING TO THE OWNER. AT THE TIME OF SUBMISSION, THE CONTRACTOR SHALL INFORM THE OWNER IN WRITING OF ANY DEVIATION IN THE SHOP DRAWINGS FROM THE REQUIREMENTS OF THE CONTRACT DOCUMENTS.

SPECIAL INSPECTION:

THE FOLLOWING ITEMS REQUIRE SPECIAL INSPECTION DURING CONSTRUCTION PER UNIFORM BUILDING CODE CHAPTER 17.

1. ALL CONCRETE REINFORCING PLACEMENT PRIOR TO PLACEMENT OF CONCRETE.
2. ALL BOLTS INSTALLED IN CONCRETE PRIOR TO PLACEMENT OF CONCRETE.
3. ALL COMPLETE PENETRATION WELDS PERFORMED IN A FABRICATING SHOP OR IN THE FIELD SHALL BE RADIOGRAPHICALLY OR ULTRASONICALLY TESTED.
4. ALL SHOP WELDS OTHER THAN COMPLETE PENETRATION WELDS SHALL BE VISUALLY INSPECTED.
5. ALL FILLET WELDS MADE IN THE FIELD SHALL BE VISUALLY INSPECTED.
6. PERIODIC INSPECTIONS OF ROOF AND FLOOR DECKING SHALL BE PERFORMED.

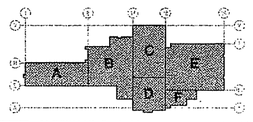

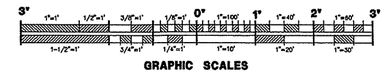

GRAPHIC SCALES

REFERENCE NO. S0.1

REV.	DATE	C.O.	ACTION	DESCRIPTION	BY	APP'D.

CONTRACTOR _____ CONTRACT NO. _____
CITY _____ STATE _____

RECOMMENDED: _____ PRIME CONTRACTOR
APPROVED: _____ RESIDENT ENGINEER
DATE:

USKH — A quarter century of design for Alaskans

ALASKA DISTRICT
CORPS OF ENGINEERS
ANCHORAGE, ALASKA

DESIGNED: MNA
DRAWN: DJR
TRACED:
CHECKED: BEH
SUBMITTED:
DR. SECT.

BEN EIELSON JR./SR. HIGH SCHOOL - PHASE 3
EIELSON AIR FORCE BASE, ALASKA
STRUCTURAL
AREA "E" - REFERENCE PLAN AND GENERAL STRUCTURAL NOTES

RECOMMENDED: CHIEF, MILITARY TECHNICAL ENGINEERING BRANCH
APPROVED: CHIEF ENGINEERING DIVISION
DATE:
SCALE: NONE
SPEC. NO.
DRAWING NUMBER 29-02-38
SHEET OF

CORPS OF ENGINEERS

U. S. ARMY

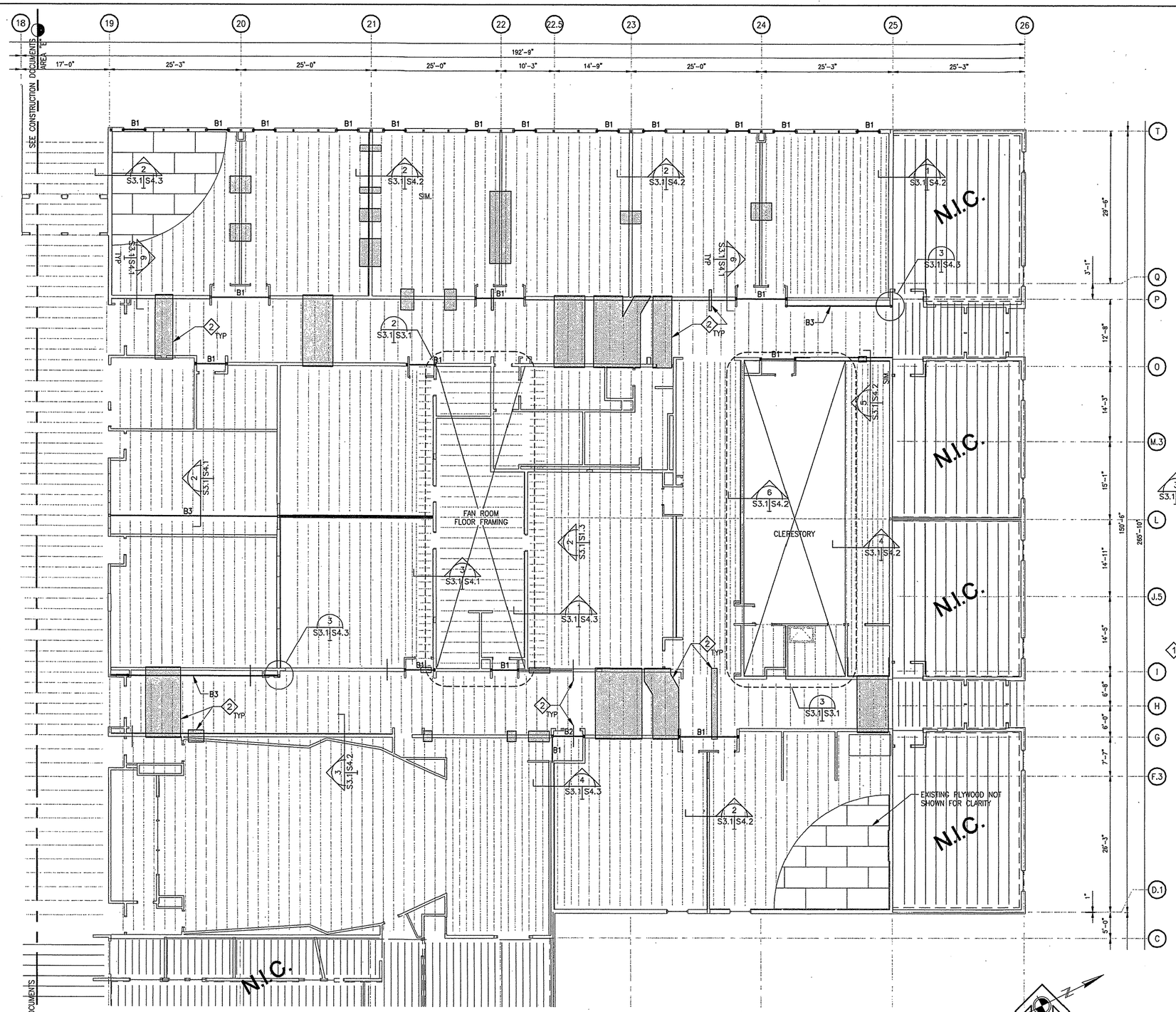

1 AREA "E" ROOF FRAMING PLAN
S0.1 S3.1
SCALE: 1/8"=1'-0"

PLAN NOTES

1. CS16 COIL STRAPPING BETWEEN FLOORS–TYPICAL ALL WALL ENDS AND CORNERS, CLERESTORY AND FAN ROOM ONLY. ADD COIL STRAP TO CONNECT WALL STUDS BETWEEN FLOORS, MINIMUM 24" OVERLAP WITH 20 TEK NAILS EACH MINIMUM.
2. EXISTING MECHANICAL PENETRATIONS ARE BASED UPON ASBUILT DRAWINGS. CONTRACTOR SHALL VERIFY LOCATIONS AND SIZES OF EXISTING AND NEW PENETRATIONS PRIOR TO CONSTRUCTION. NOTIFY THE STRUCTURAL ENGINEER OF ANY PENETRATIONS THRU EXISTING OR NEW SHEAR WALLS.
3. NEW 2x WALL TO REPLACE CURVED SECTION, SEE FRAMING DETAILS.

BEAM (B) SCHEDULE

MARK	BEAM SIZE	END CONNECTION	REMARKS
B1	5 1/8" X 15" GLULAM BEAM	SEE 5/S4.1	———
B2	5 1/8" X 21" GLULAM BEAM	SEE 5/S4.1	———
B3	W 12 X 50	SEE 3/S4.3	———

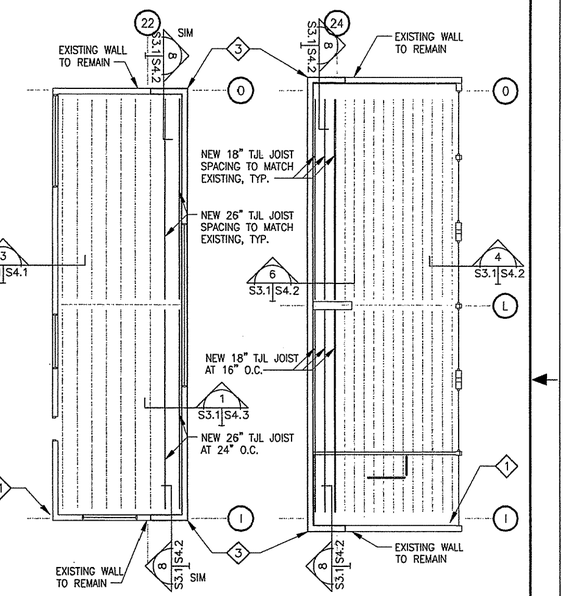

2 FAN ROOM ROOF FRAMING
S3.1 S3.1
SCALE: 1/8"=1'-0"

3 CLERESTORY ROOF FRAMING
S3.1 S3.1
SCALE: 1/8"=1'-0"

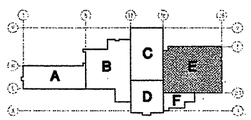

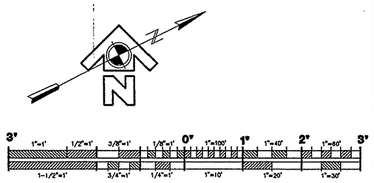

GRAPHIC SCALES

REFERENCE NO. S3.1

REV.	DATE	C.O.	ACTION	DESCRIPTION	BY	APP'D.

CONTRACT NO. _____

CONTRACTOR _____

CITY _____ STATE _____

RECOMMENDED: _____ PRIME CONTRACTOR

APPROVED: _____ RESIDENT ENGINEER

DATE:

USKH — A quarter century of design for Alaskans

ALASKA DISTRICT
CORPS OF ENGINEERS
ANCHORAGE, ALASKA

DESIGNED: MNA
DRAWN: DJR
TRACED:
CHECKED: BEH
SUBMITTED:
CH. SECT.

BEN EIELSON JR./SR. HIGH SCHOOL – PHASE 3
EIELSON AIR FORCE BASE, ALASKA
STRUCTURAL
AREA "E"
FRAMING PLANS

RECOMMENDED: _____ CHIEF, MILITARY TECHNICAL ENGINEERING BRANCH

APPROVED: _____ CHIEF ENGINEERING DIVISION

DATE:

SCALE: 1/8"=1'-0"

SPEC. NO.

DRAWING NUMBER
29-02-38

SHEET OF

CORPS OF ENGINEERS

U. S. ARMY

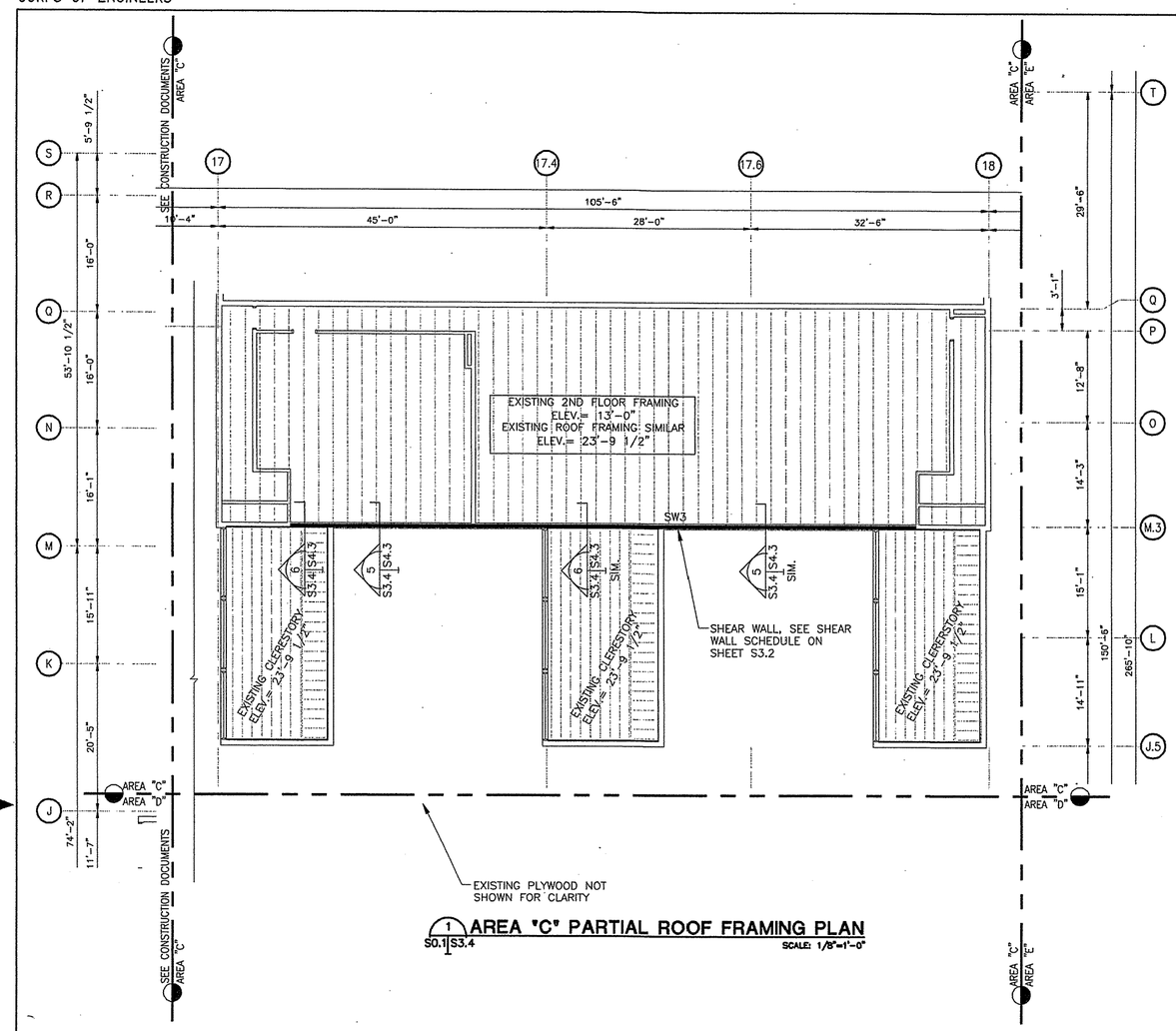

1 S0.1 S3.4 AREA "C" PARTIAL ROOF FRAMING PLAN

SCALE: 1/8"=1'-0"

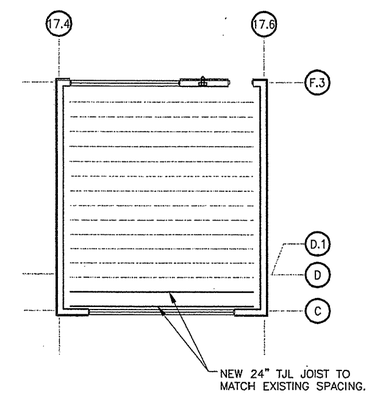

1 S0.1 S3.4 AREA "D" FAN ROOM ROOF FRAMING PLAN

SCALE: 1/8"=1'-0"

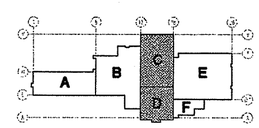

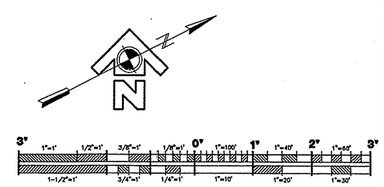

GRAPHIC SCALES

REFERENCE NO. S3.4

REV.	DATE	C.O.	ACTION	DESCRIPTION	BY	APP'D.

CONTRACT NO.

CONTRACTOR

CITY STATE

RECOMMENDED: PRIME CONTRACTOR

APPROVED: RESIDENT ENGINEER

DATE:

USKH A quarter century of design for Alaskans

ALASKA DISTRICT
CORPS OF ENGINEERS
ANCHORAGE, ALASKA

DESIGNED: MNA
DRAWN: DJR
TRACED:
CHECKED: BEH
SUBMITTED:
CH. SECT.

BEN EIELSON JR./SR. HIGH SCHOOL – PHASE 3
EIELSON AIR FORCE BASE, ALASKA
STRUCTURAL
AREA "C"
ROOF FRAMING PLAN

RECOMMENDED: CHIEF, MILITARY TECHNICAL ENGINEERING BRANCH

APPROVED: CHIEF ENGINEERING DIVISION

DATE:

SCALE: 1/8"=1'-0"

SPEC. NO.

DRAWING NUMBER
29-02-38

SHEET OF

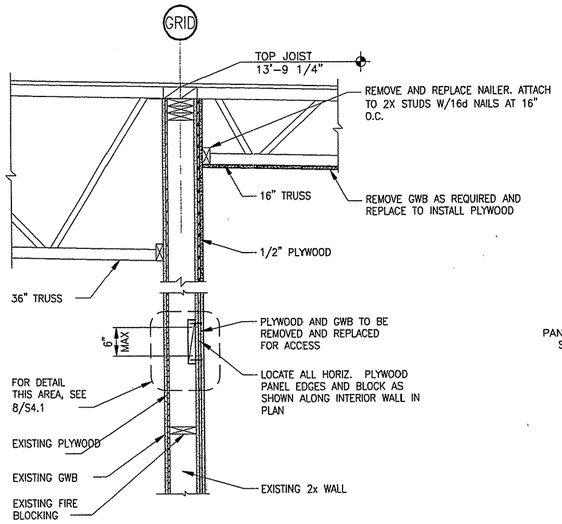

6 S3.1 S4.1 TYPICAL DETAIL

SCALE: 1"=1'-0"

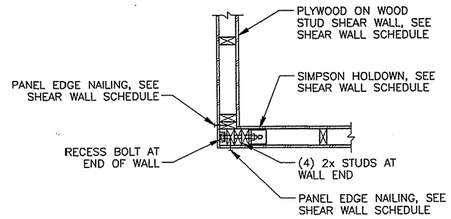

4 S3.1 S4.1 PLAN - TYPICAL END OF SHEAR WALL CONNECTION

SCALE: 1"=1'-0"

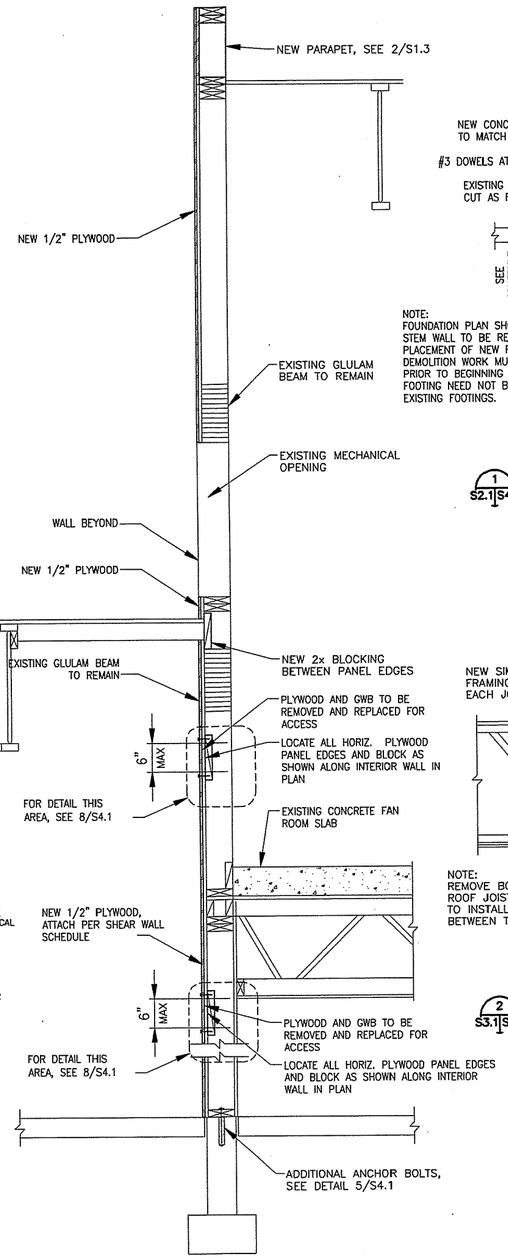

3 S3.1 S4.1 TYPICAL DETAIL

SCALE: 1"=1'-0"

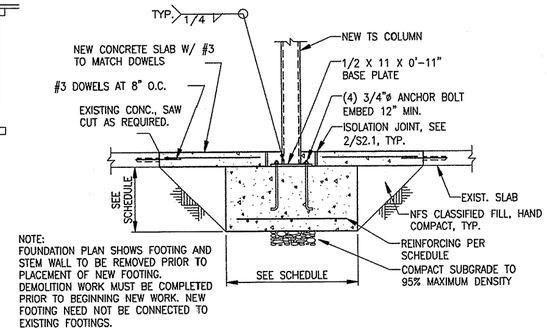

NOTE:
FOUNDATION PLAN SHOWS FOOTING AND STEM WALL TO BE REMOVED PRIOR TO PLACEMENT OF NEW FOOTING. DEMOLITION WORK MUST BE COMPLETED PRIOR TO BEGINNING NEW WORK. NEW FOOTING NEED NOT BE CONNECTED TO EXISTING FOOTINGS.

1 S2.1 S4.1 TYPICAL NEW INTERIOR COLUMN AT FOOTING

SCALE: 3/4"=1'-0"

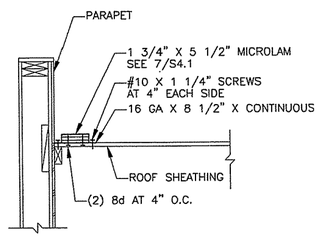

NOTE: AT PARAPET LOCATIONS, INSTALL DRAG STRUT AS SHOWN. AT OTHER LOCATIONS, INSTALL DRAG STRUT AT TOP OF WALL ABOVE ROOF SHEATHING. FOR FRAMING OF PARAPETS, ROOFS, OR WALLS, SEE PLANS AND DETAILS.

7 S3.3 S4.1 TYPICAL DRAGSTRUT AT ROOF

SCALE: NONE

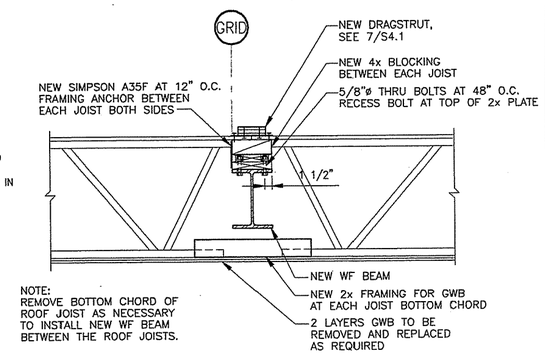

NOTE:
REMOVE BOTTOM CHORD OF ROOF JOIST AS NECESSARY TO INSTALL NEW WF BEAM BETWEEN THE ROOF JOISTS.

2 S3.1 S4.1 NEW BEAM AT EXISTING ROOF JOISTS

SCALE: 1"=1'-0"

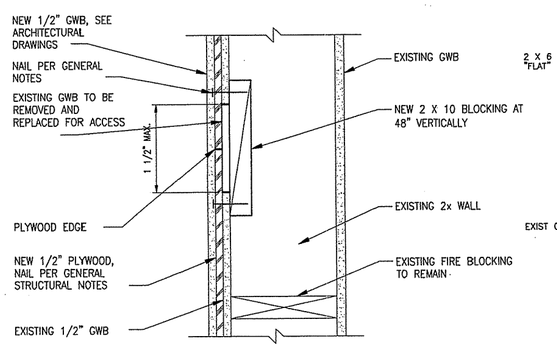

8 S4.1 S4.1 TYPICAL NEW BLOCKING IN EXISTING WALL

SCALE: NONE

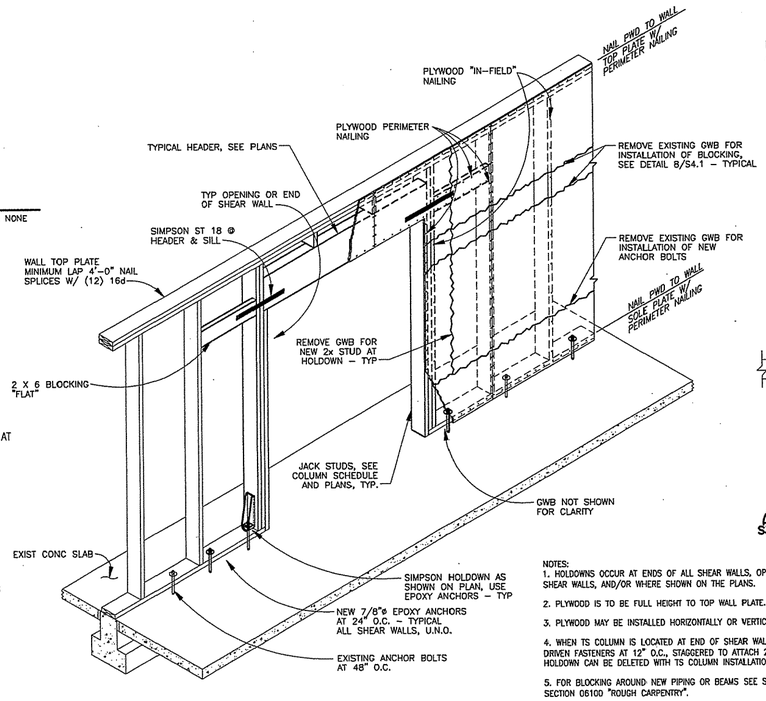

5 S3.1 S4.1 TYPICAL SHEAR WALL DESIGN

SCALE: 1"=1'-0"

NOTES:
1. HOLDOWNS OCCUR AT ENDS OF ALL SHEAR WALLS. OPENINGS IN SHEAR WALLS, AND/OR WHERE SHOWN ON THE PLANS.
2. PLYWOOD IS TO BE FULL HEIGHT TO TOP WALL PLATE.
3. PLYWOOD MAY BE INSTALLED HORIZONTALLY OR VERTICALLY.
4. WHEN TS COLUMN IS LOCATED AT END OF SHEAR WALL, USE POWDER DRIVEN FASTENERS AT 12" O.C., STAGGERED TO ATTACH 2x FRAMING. HOLDOWN CAN BE DELETED WITH TS COLUMN INSTALLATION.
5. FOR BLOCKING AROUND NEW PIPING OR BEAMS SEE SPECIFICATION SECTION 06100 "ROUGH CARPENTRY".
6. IN LIEU OF PARTIAL GWB REMOVAL ON SHEAR WALLS, CONTRACTOR MAY REMOVE ALL GWB TO INSTALL NEW SHEAR WALL COMPONENTS, I.E. BLOCKING, ANCHOR BOLTS, HOLDOWNS, ETC.

GRAPHIC SCALES

REFERENCE NO. S4.1

REV.	DATE	C.O.	ACTION	DESCRIPTION	BY	APP'D.

CONTRACT NO.

CONTRACTOR

CITY STATE

RECOMMENDED: PRIME CONTRACTOR | APPROVED: RESIDENT ENGINEER | DATE:

USKH — A quarter century of design for Alaskans

ALASKA DISTRICT
CORPS OF ENGINEERS
ANCHORAGE, ALASKA

DESIGNED: MNA
DRAWN: DJR
TRACED:
CHECKED: BEH
SUBMITTED:
CH. SECT.

BEN EIELSON JR./SR. HIGH SCHOOL - PHASE 3
EIELSON AIR FORCE BASE, ALASKA
STRUCTURAL
STRUCTURAL DETAILS

RECOMMENDED: CHIEF, MILITARY TECHNICAL ENGINEERING BRANCH | APPROVED: CHIEF ENGINEERING DIVISION | DATE:

SCALE: AS NOTED | SPEC. NO.

DRAWING NUMBER 29-02-38

SHEET OF

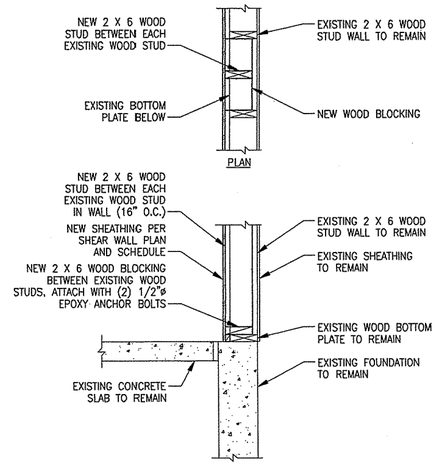

7 DETAIL
S3.1 S4.2
SCALE: 1"=1'-0"

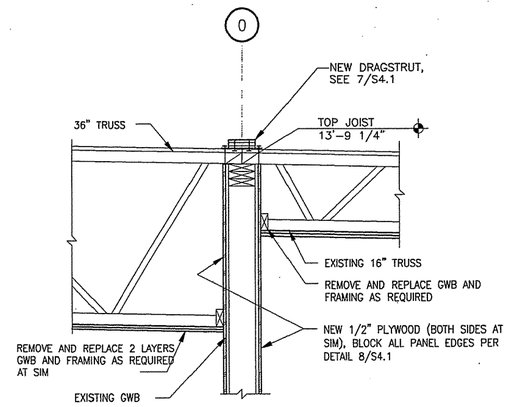

5 DETAIL
S3.1 S4.2
SCALE: 1"=1'-0"

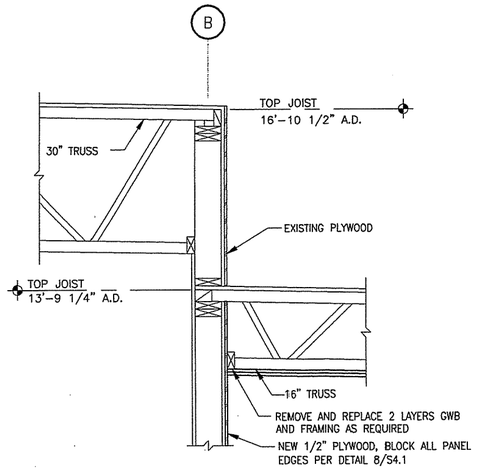

3 DETAIL
S3.1 S4.2
SCALE: 1"=1'-0"

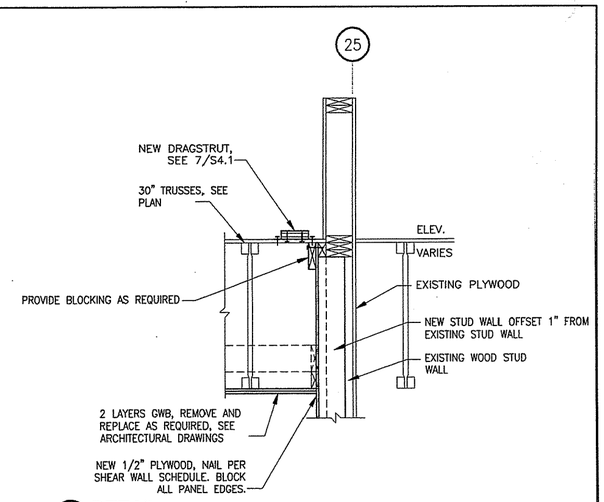

1 DETAIL
S3.1 S4.2
SCALE: 1"=1'-0"

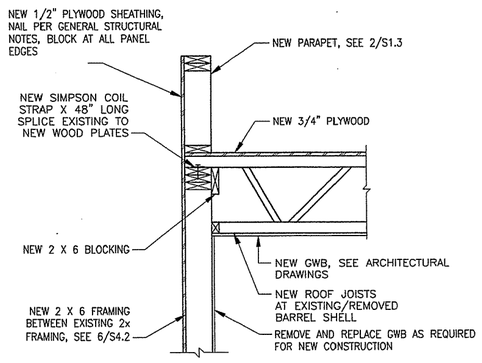

8 DETAIL
S3.1 S4.2
SCALE: 1"=1'-0"

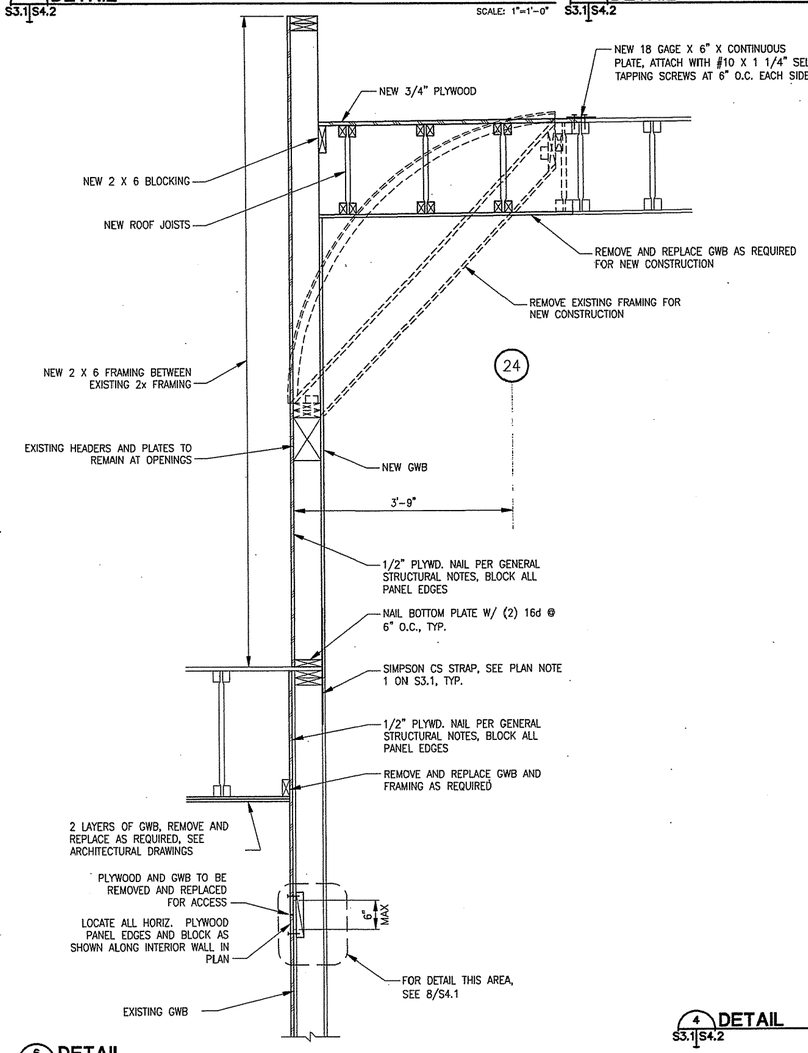

6 DETAIL
S3.1 S4.2
SCALE: 1"=1'-0"

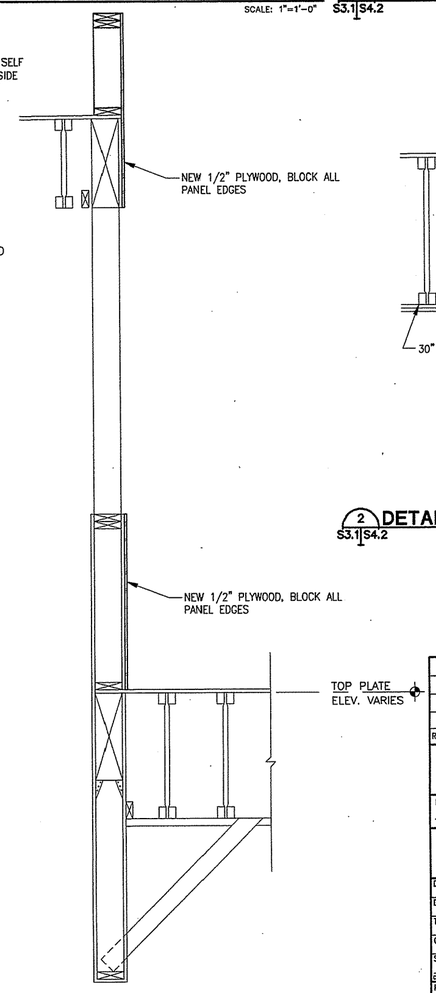

4 DETAIL
S3.1 S4.2
SCALE: 1"=1'-0"

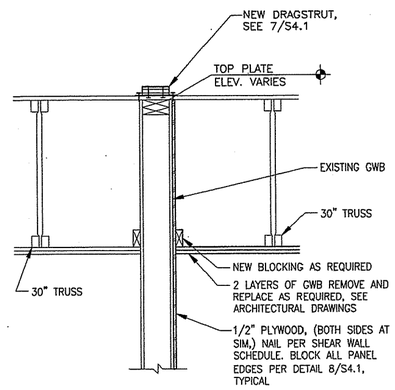

2 DETAIL
S3.1 S4.2
SCALE: 1"=1'-0"

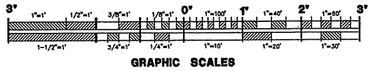

GRAPHIC SCALES

REV.	DATE	C.O.	ACTION	DESCRIPTION	BY	APP'D.

CONTRACT NO.
CONTRACTOR
CITY STATE

RECOMMENDED: (PRIME CONTRACTOR) APPROVED: (RESIDENT ENGINEER) DATE:

USKH — A quarter century of design for Alaskans

ALASKA DISTRICT
CORPS OF ENGINEERS
ANCHORAGE, ALASKA

DESIGNED: MNA
DRAWN: DJR
TRACED:
CHECKED: BEH
SUBMITTED:
CH. SECT.

BEN EIELSON JR./SR. HIGH SCHOOL – PHASE 3
EIELSON AIR FORCE BASE, ALASKA
STRUCTURAL
STRUCTURAL DETAILS

RECOMMENDED: (CHIEF, MILITARY TECHNICAL ENGINEERING BRANCH) APPROVED: (CHIEF ENGINEERING DIVISION) DATE:

SCALE: AS NOTED
SPEC. NO.
DRAWING NUMBER 29-02-38
SHEET OF

REFERENCE NO. S4.2

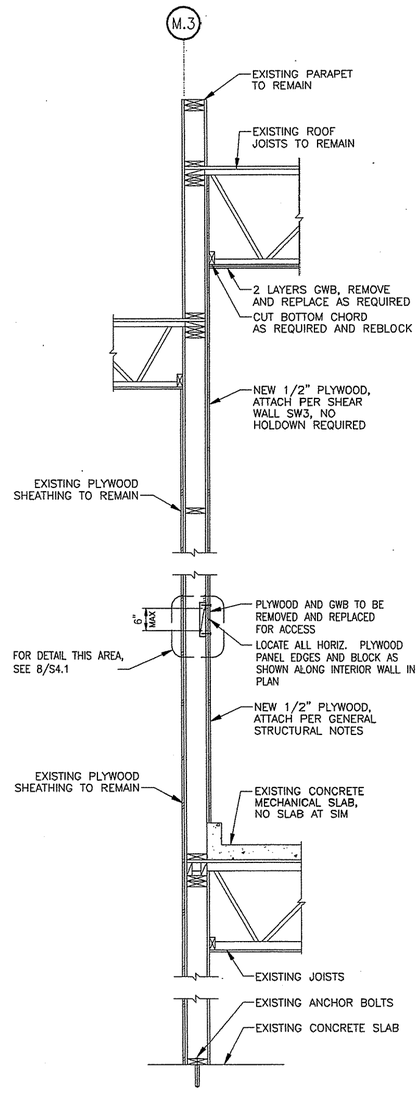

6 S3.1 S4.3 WALL SECTION

SCALE: 3/4"=1'-0"

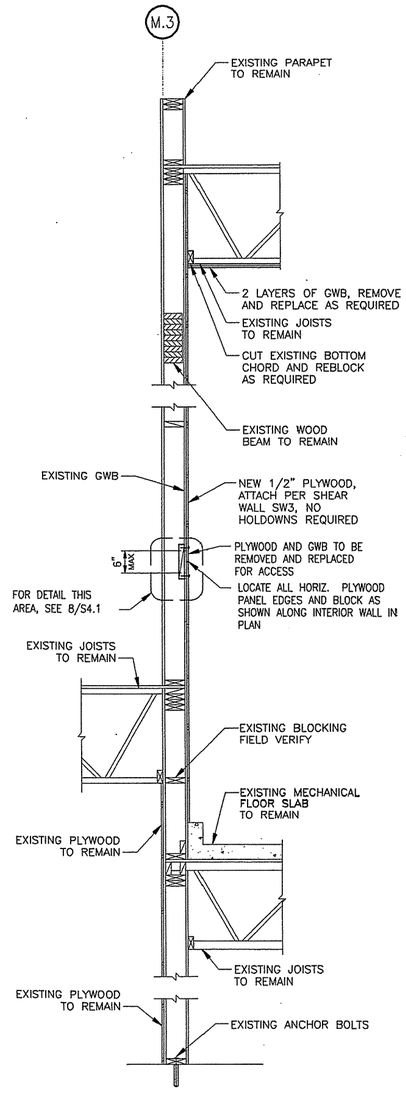

5 S3.1 S4.3 WALL SECTION

SCALE: 3/4"=1'-0"

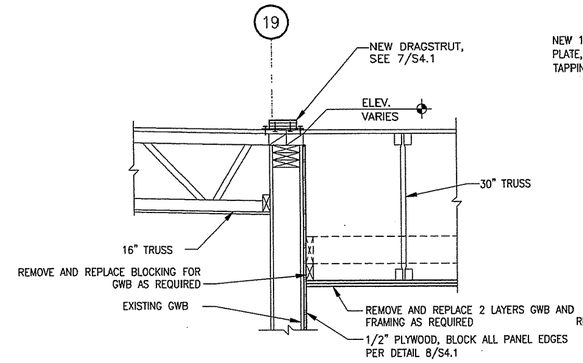

2 S3.1 S4.3 DETAIL

SCALE: 1"=1'-0"

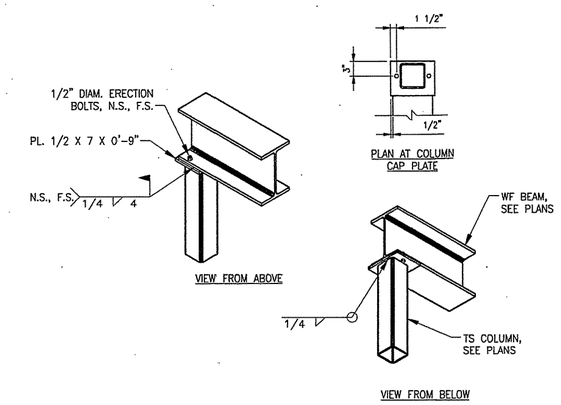

3 S3.1 S4.3 TYP. COLUMN TO WF CONNECTION

SCALE: 1"=1'-0"

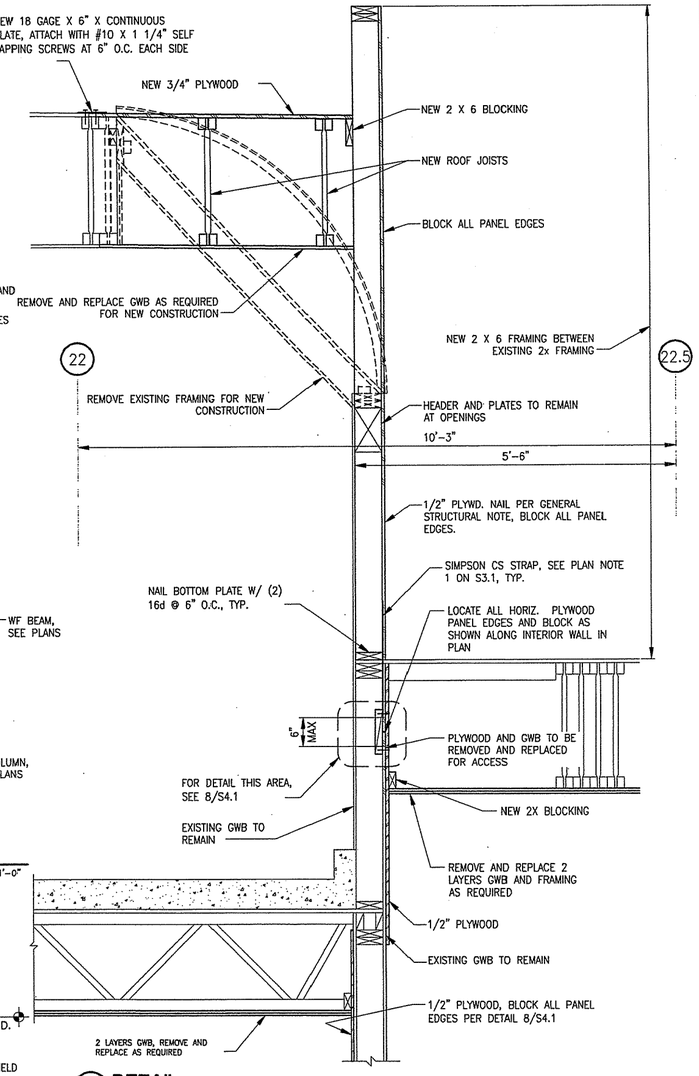

1 S3.1 S4.3 DETAIL

SCALE: 1"=1'-0"

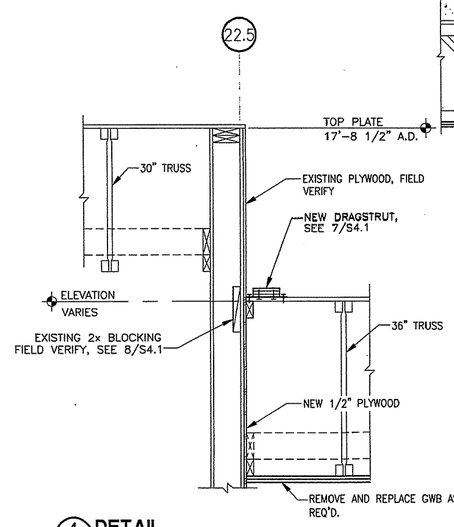

4 S3.1 S4.3 DETAIL

SCALE: 1"=1'-0"

REV.	DATE	C.O.	ACTION	DESCRIPTION	BY	APP'D.

CONTRACT NO.

CONTRACTOR

CITY STATE

RECOMMENDED: PRIME CONTRACTOR | APPROVED: RESIDENT ENGINEER | DATE:

USKH — A quarter century of design for Alaskans

ALASKA DISTRICT
CORPS OF ENGINEERS
ANCHORAGE, ALASKA

DESIGNED: MNA
DRAWN: DJR
TRACED:
CHECKED: BEH
SUBMITTED:
CH. SECT.

BEN EIELSON JR./SR. HIGH SCHOOL – PHASE 3
EIELSON AIR FORCE BASE, ALASKA
STRUCTURAL
STRUCTURAL DETAILS

RECOMMENDED: CHIEF, MILITARY TECHNICAL ENGINEERING BRANCH | APPROVED: CHIEF, ENGINEERING DIVISION | DATE:

SCALE: AS NOTED | SPEC. NO.

DRAWING NUMBER 28-02-38

SHEET OF

GRAPHIC SCALES

REFERENCE NO. S4.3

CORPS OF ENGINEERS

U. S. ARMY

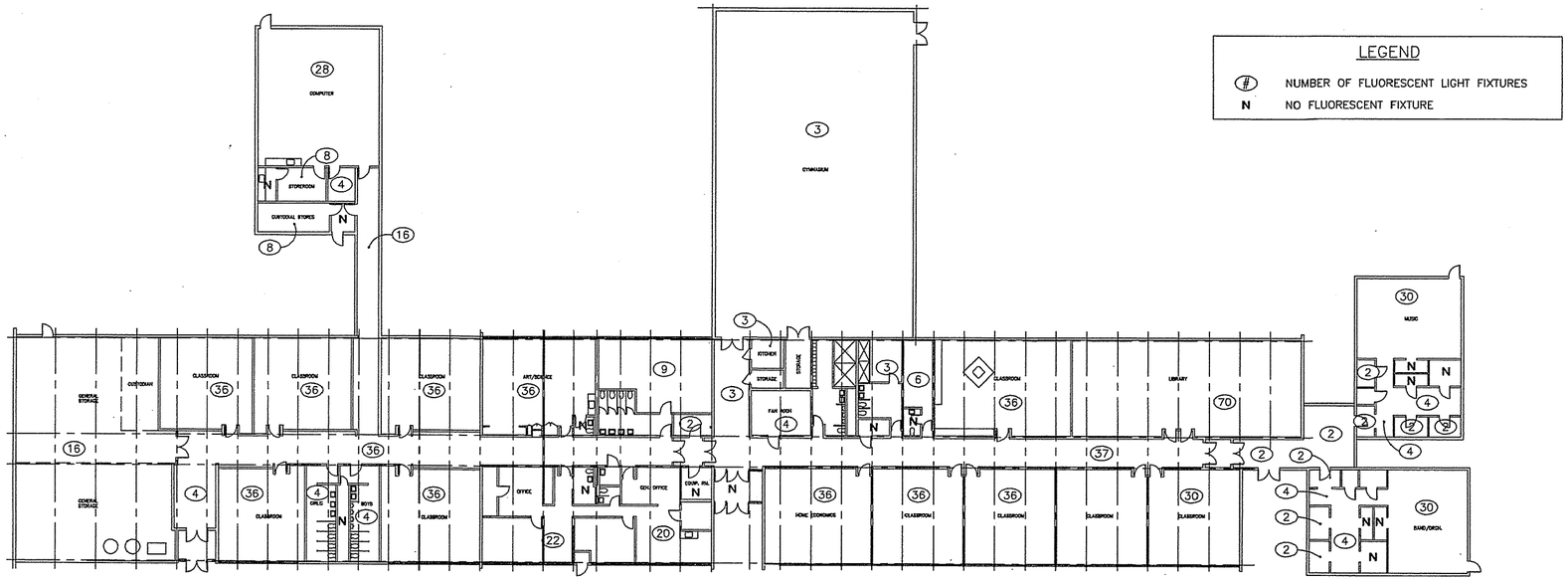

LEGEND

(#)	NUMBER OF FLUORESCENT LIGHT FIXTURES
N	NO FLUORESCENT FIXTURE

N

2 PB1 PB1 **FLOOR PLAN**

SCALE: 1/16"=1'-0"

GENERAL NOTES:

1. EXTERIOR ROOF PLUMBING VENT LEAD FLASHING ARE LEAD CONTAMINATED.
2. YELLOW PAINT MARKINGS ON ASPHALT IN COURT YARD AND PARKING LOT.
3. ALL COPPER PIPING SOLDER JOINTS FOR DRAIN, WASTE, VENT, HOT WATER, COLD WATER AND HOT WATER RECIRCULATION PIPING.
4. DRAIN PIPING HUB AND SPIGOT JOINTS FITTINGS.

LEGEND

1	EXTERIOR OPERABLE AND FIXED WINDOWS – FACTORY APPLIED PRIMER UNDER FINISHED IS LEAD CONTAMINATED. INCLUDES TRIM, FRAME AND SILL.
2	EXTERIOR WINDOWS REPLACES BY TACKBORAD – FACTORY APPLIED PRIMER UNDER FINISHED AND INCLUDES TRIM, FRAME AND SILL.
3	EXTERIOR WOOD DOOR FRAMES – PRIMER UNDER FINISH.
4	EXTERIOR SOFFIT PRIMER UNDER WHITE PAINT NEAR ROOF OF SCHOOL.
5	EXTERIOR FACIAL PRIMER UNDER WHITE PAINT NEAR ROOF OF SCHOOL.
6	EXTERIOR YELLOW PAINT OVER RED, YELLOW PAINT OVER BROWN OR YELLOW PAINT UNDER BEIGE PAINT.
7	GENERAL STORAGE AREA – YELLOW PAINT ON FLOOR IDENTIFYING THE FOOT PRINT OF THE HOT WATER HEATING EQUIPMENT.
8	MECHANICALLY FASTEN CHALKBOARDS IN CLASSROOMS AND TEACHERS LOUNGE.
9	WHITE PAINT ON TOP AND BOTTOM OF TWO STORAGE TANKS – 6"ø AND 4"ø.
10	MECHANICALLY FASTEN LADDER IN COMPUTER ROOM – PRIMER UNDER BLUE FINISHED PAINT IN COMPUTER ROOM.
11	4" DIAMETER PIPE NEXT TO COMPUTER ROOM – PRIMER UNDER YELLOW FINISH PAINT.
12	MECHANICALLY FASTEN TACKBOARDS IN CORRIDOR.
13	TEACHERS MEN'S AND WOMEN'S RESTROOM CERAMIC TILE BASE YELLOW AND BEIGE.
14	CORRIDOR MECHANICALLY FASTEN FIRE ALARM BOXES.

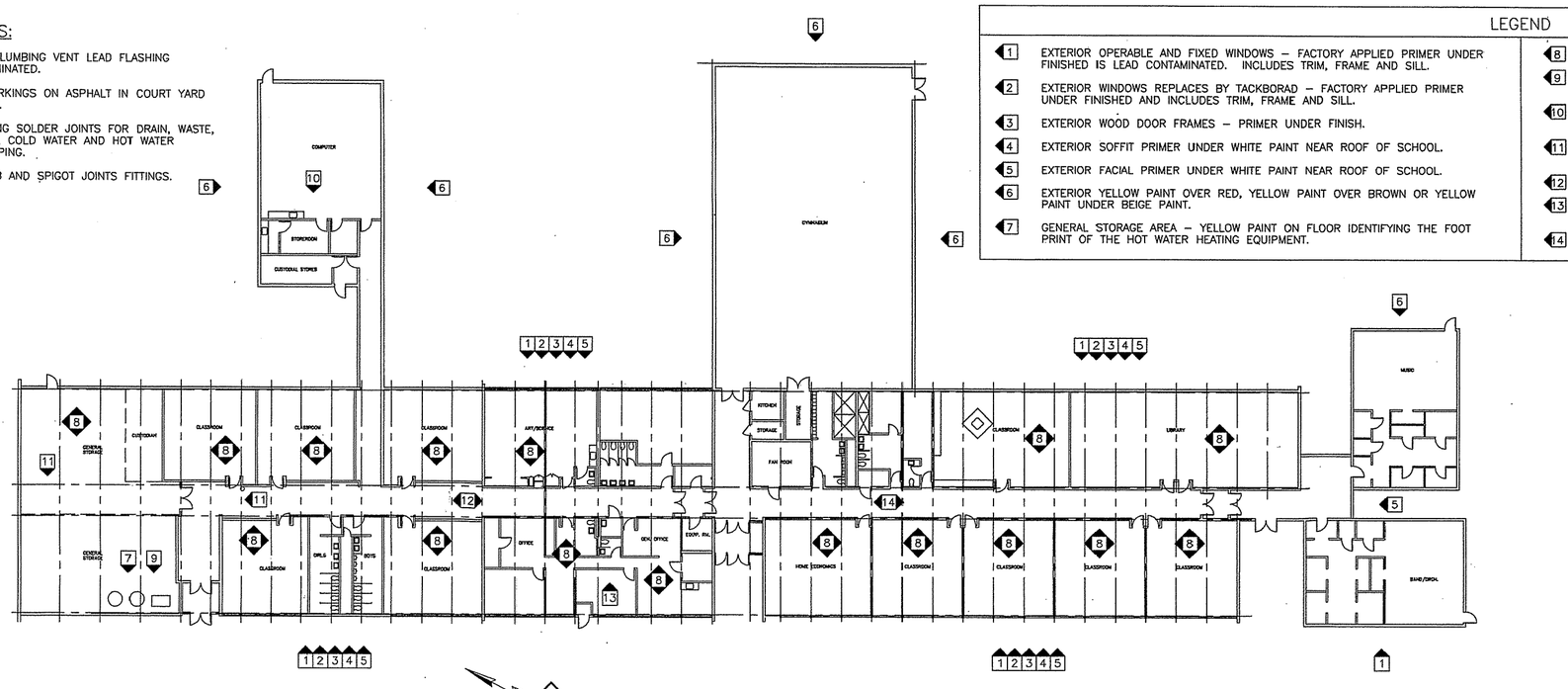

N

1 PB1 PB1 **FLOOR PLAN**

SCALE: 1/16"=1'-0"

REFERENCE NO. PB1

REV.	DATE	C.O.	ACTION	DESCRIPTION	BY	APP'D.

CONTRACTOR _____ CONTRACT NO. _____

CITY _____ STATE _____

RECOMMENDED: _____ PRIME CONTRACTOR

APPROVED: _____ RESIDENT ENGINEER

DATE:

USKH — A quarter century of design for Alaskans

ALASKA DISTRICT
CORPS OF ENGINEERS
ANCHORAGE, ALASKA

DESIGNED: RJW
DRAWN: LDS/EFH
TRACED:
CHECKED: SVB
SUBMITTED:
SR. SECT.

BEN EIELSON JR./SR. HIGH SCHOOL – PHASE 3
EIELSON AIR FORCE BASE, ALASKA
LEAD ABATMENT & PCB

TAYLOR ELEMENTARY
ABATEMENT

RECOMMENDED: _____ CHIEF, MILITARY TECHNICAL ENGINEERING BRANCH

APPROVED: _____ CHIEF ENGINEERING DIVISION

DATE:

SCALE: AS SHOWN

SPEC. NO.

DRAWING NUMBER
29-02-38

SHEET OF

507202PB1.DWG (1=1)

CORPS OF ENGINEERS

U. S. ARMY

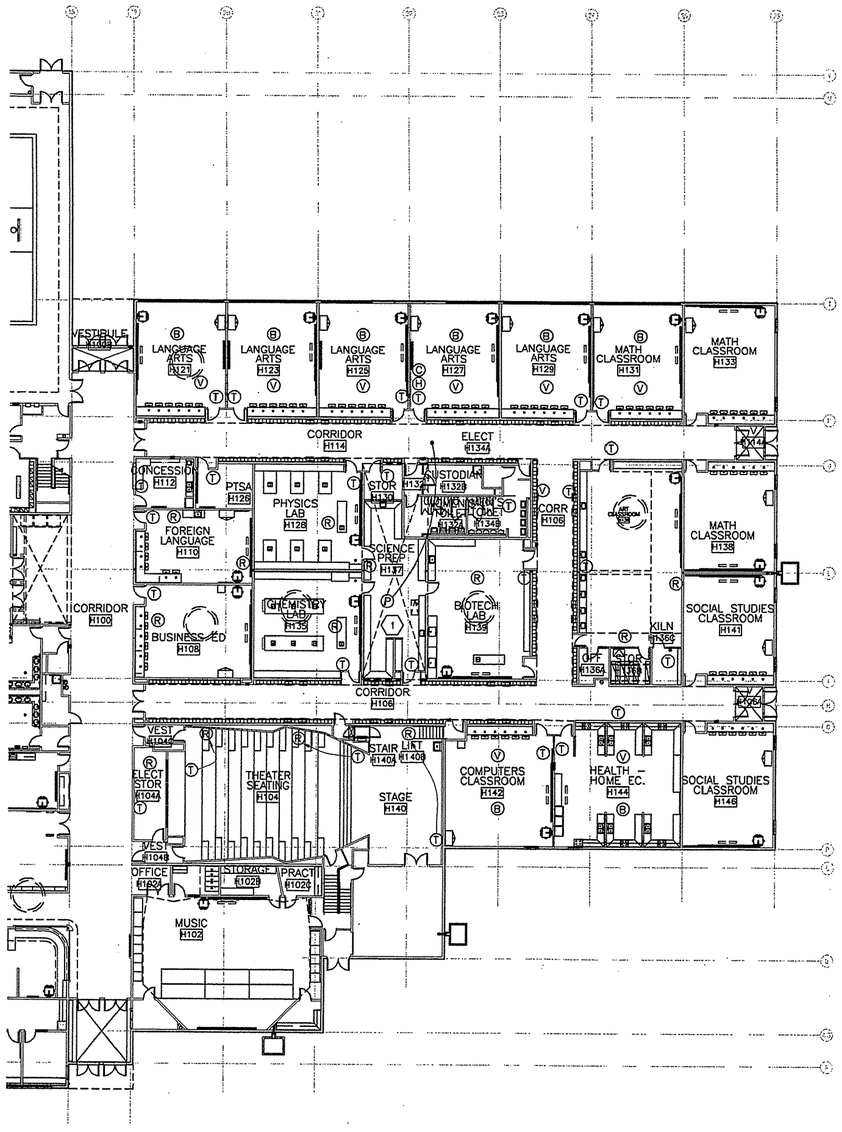

CONTROLS LEGEND	
T	THERMAL SENSOR
V	VAV BOX ACTUATOR
C	CO2 SENSOR
H	RELATIVE HUMIDITY SENSOR
B	HEATING CONTROL VALVE
R	VAV BOX WITH REHEAT COIL
P	STATIC PRESSURE SENSOR

SHEET NOTES	
1	LOCATE IN DDC PANEL IN MECHANICAL ROOM ABOVE.

N

1 CONTROLS PLAN
M8.1 M8.1 SCALE: 1/16"=1'-0"

REV.	DATE	C.O.	ACTION	DESCRIPTION	BY	APP'D.

CONTRACT NO.
CONTRACTOR
CITY STATE
RECOMMENDED: PRIME CONTRACTOR
APPROVED: RESIDENT ENGINEER
DATE:

USKH A quarter century of design for Alaskans

ALASKA DISTRICT
CORPS OF ENGINEERS
ANCHORAGE, ALASKA

DESIGNED: SVB
DRAWN: LDS/EFH
TRACED:
CHECKED: SVB
SUBMITTED:
CH. SECT.

BEN EIELSON JR./SR. HIGH SCHOOL - PHASE 3
EIELSON AIR FORCE BASE, ALASKA
MECHANICAL
CONTROLS PLAN

RECOMMENDED: CHIEF, MILITARY TECHNICAL ENGINEERING BRANCH
APPROVED: CHIEF ENGINEERING DIVISION
DATE:
SCALE: AS SHOWN
SPEC. NO.
DRAWING NUMBER 29-02-38
SHEET OF

REFERENCE NO. M8.1

5072020441(1=1)

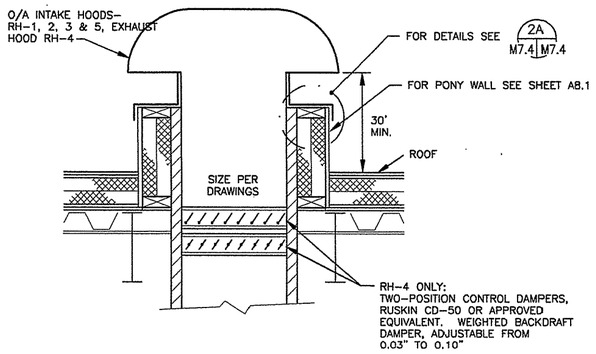

1 M7.2 M7.2 **ROOF HOOD INSTALLATION DETAIL**
SCALE: NONE

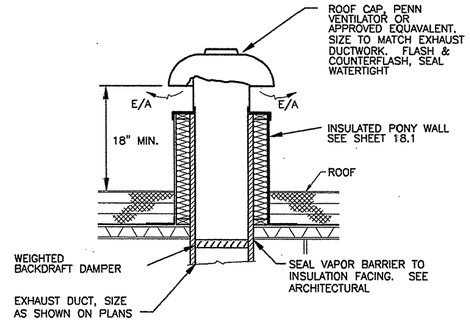

2 M7.2 M7.2 **TYPICAL EXHAUST FAN ROOF PENETRATION**
SCALE: NONE

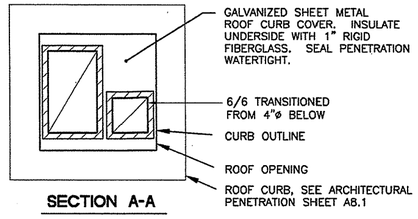

SECTION A-A

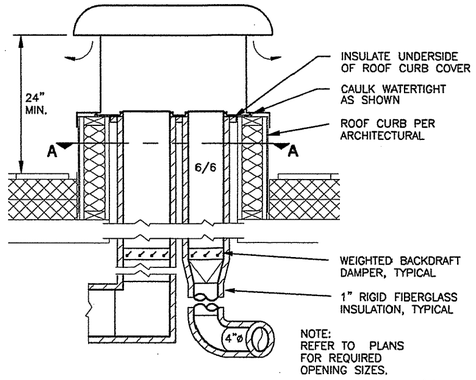

3 M7.2 M7.2 **ROOF PENETRATION DETAIL**
MULTIPLE EXHAUSTS SHOWN
SCALE: NONE

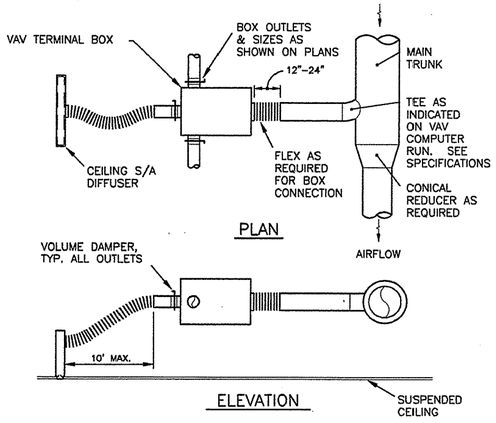

5 M7.2 M7.2 **VAVBOX/DIFFUSER DETAIL**
SCALE: NONE

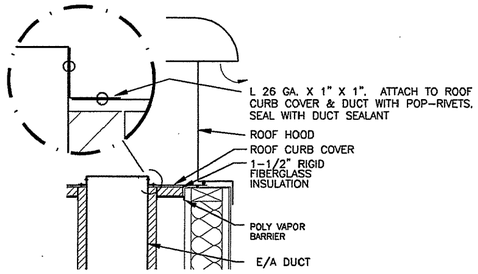

2A M7.4 M7.4 **ROOF CURB COVER INSULATION DETAIL**
SCALE: NONE

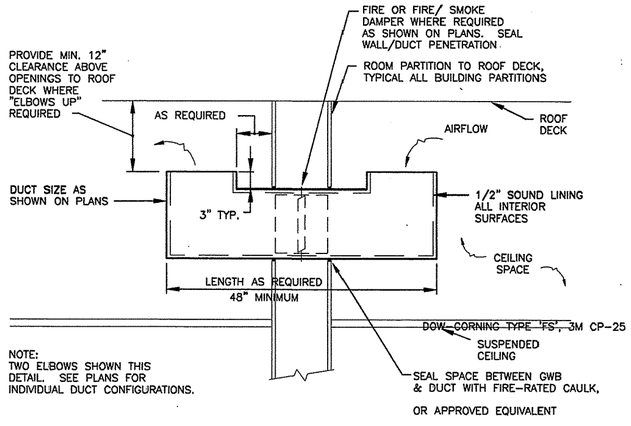

6 M7.2 M7.2 **TRANSFER DUCT DETAIL**
SCALE: NONE

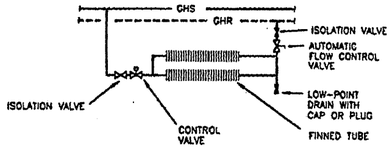

7 M7.2 M7.2 **BASEBOARD PIPING SCHEMATIC**
SCALE: NONE

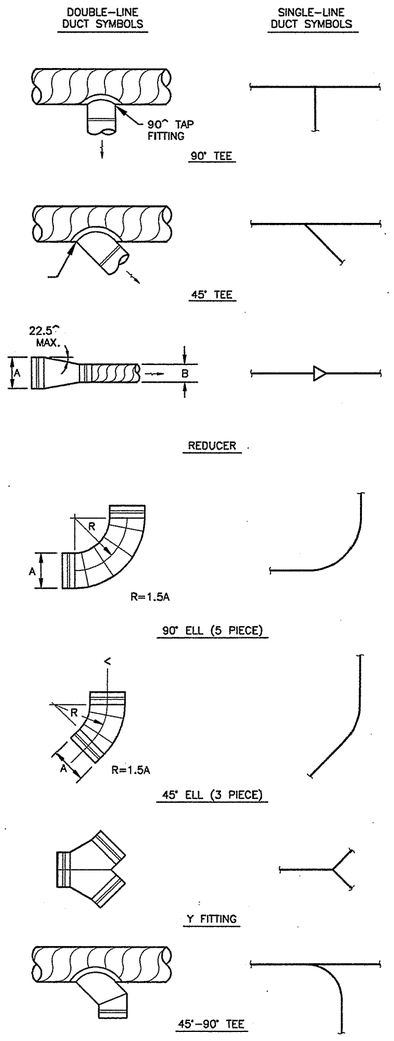

4 M7.2 M7.2 **ROUND DUCT CONSTRUCTION DETAILS**
SCALE: NONE

REV.	DATE	C.O.	ACTION	DESCRIPTION	BY	APP'D.

CONTRACT NO. _____
CONTRACTOR _____
CITY _____ STATE _____
RECOMMENDED: (PRIME CONTRACTOR) APPROVED: (RESIDENT ENGINEER) DATE:

USKH — A quarter century of design for Alaskans
ALASKA DISTRICT
CORPS OF ENGINEERS
ANCHORAGE, ALASKA

DESIGNED: SVB
DRAWN: LDS/EFH
TRACED:
CHECKED: SVB
SUBMITTED:
CK. SEC.

BEN EIELSON JR./SR. HIGH SCHOOL - PHASE 3
EIELSON AIR FORCE BASE, ALASKA
MECHANICAL
TYPICAL DETAILS

RECOMMENDED: (CHIEF, MILITARY TECHNICAL ENGINEERING BRANCH) APPROVED: (CHIEF ENGINEERING DIVISION) DATE:
SCALE: AS SHOWN SPEC. NO.
DRAWING NUMBER 29-02-38
SHEET OF

REFERENCE NO. M7.2

507202M72 (1=1)

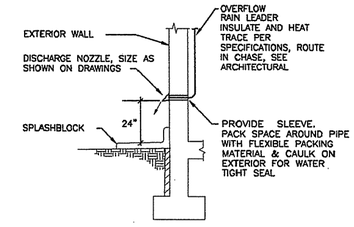

1 ORL DISCHARGE NOZZLE DETAIL
M7.1 | M5.1 SCALE: NONE

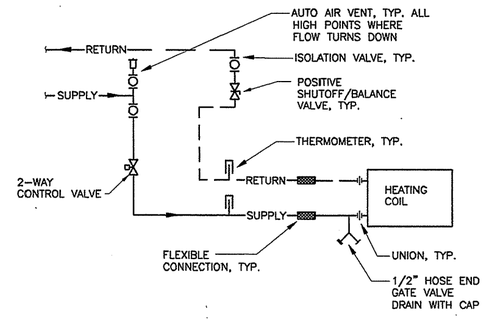

5 HEATING COIL PIPING SCHEMATIC
M7.1 | M7.1 SCALE: NONE

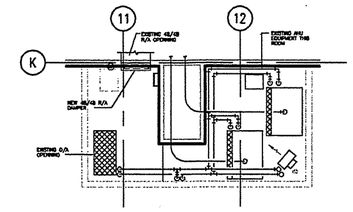

9 FAN ROOM B201 - PLAN
M7.1 | M7.1 SCALE: NONE

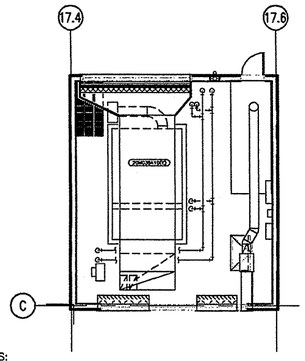

NOTES:

1. 20MC3SA10(E): CHANGE PACE AIR HANDLER UNIT FAN WHEEL AND DRIVE SET FOR CLASS TWO FAN WHEEL CONSTRUCTION AND FAN RPM OF 1213.
2. CONTRACTOR TO CONFIRM THAT FAN WHEEL IS CLASS TWO FROM NAMEPLATE AND CONFIRM THAT EXISTING VFD IS RATED FOR 1213 RPM.
3. REBALANCE 20MC3SA10(E) SYSTEM BASED ON AIR FLOWS FROM PREVIOUS PROJECTS DRAWINGS.
4. REMOVE VORTEX DAMPERS FROM 20MC3SA10(E) FAN.

10 FAN ROOM D136 - PLAN
M7.1 | M7.1 SCALE: NONE

SEE ARCHITECTURAL FOR ROOF DRAIN DETAILS

2 RD AND ORD DETAIL
M7.1 | M7.1 SCALE: NONE

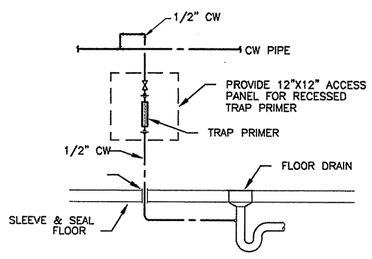

3 TRAP PRIMER DETAIL
M7.1 | M7.1 SCALE: NONE

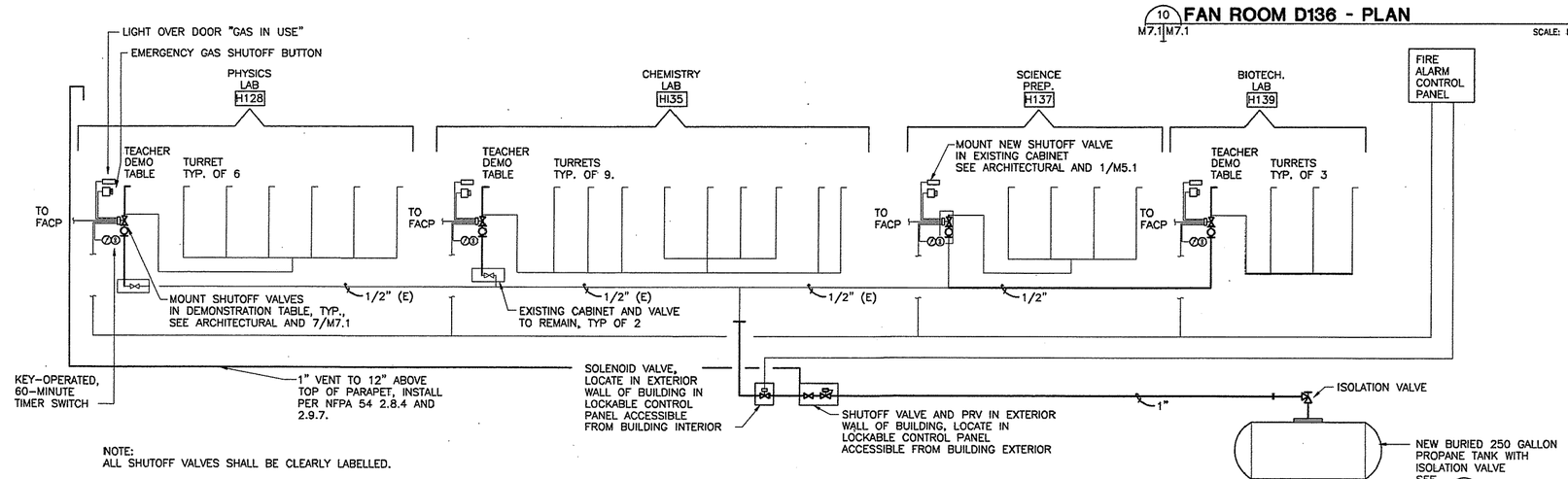

NOTE:
ALL SHUTOFF VALVES SHALL BE CLEARLY LABELLED.

6 PROPANE GAS PIPING SCHEMATIC
M7.1 | M7.1 SCALE: NONE

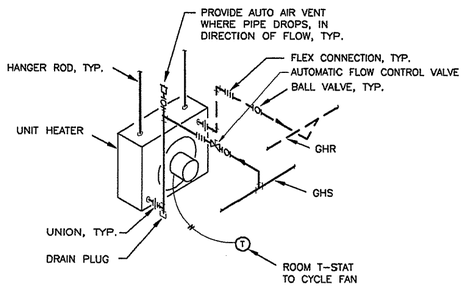

4 UNIT HEATER PIPING SCHEMATIC
M7.1 | M7.1 SCALE: NONE

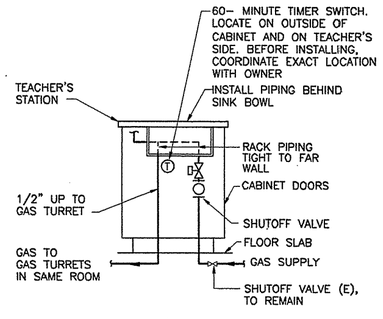

7 PROPANE GAS PIPING SECTION
M7.1 | M7.1 SCALE: NONE

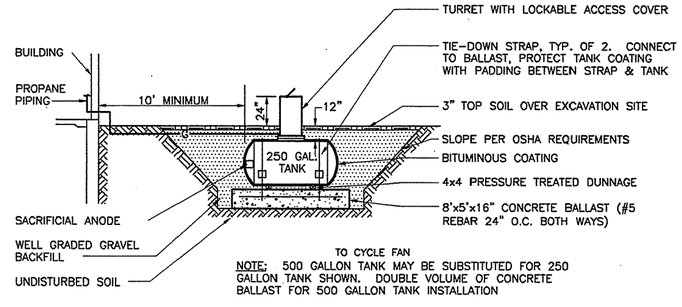

NOTE: 500 GALLON TANK MAY BE SUBSTITUTED FOR 250 GALLON TANK SHOWN. DOUBLE VOLUME OF CONCRETE BALLAST FOR 500 GALLON TANK INSTALLATION

8 PROPANE TANK INSTALLATION
M7.1 | M7.1 SCALE: NONE

REV.	DATE	C.O.	ACTION	DESCRIPTION	BY	APP'D.

CONTRACT NO.
CONTRACTOR
CITY STATE
RECOMMENDED: PRIME CONTRACTOR APPROVED: RESIDENT ENGINEER DATE:

USKH — A quarter century of design for Alaskans

ALASKA DISTRICT
CORPS OF ENGINEERS
ANCHORAGE, ALASKA

DESIGNED: SVB
DRAWN: LDS/EFH
TRACED:
CHECKED: SVB
SUBMITTED:
CH. SECT.

BEN EIELSON JR./SR. HIGH SCHOOL – PHASE 3
EIELSON AIR FORCE BASE, ALASKA
MECHANICAL
TYPICAL DETAILS & FAN ROOM PLANS

RECOMMENDED: CHIEF, MILITARY TECHNICAL ENGINEERING BRANCH
APPROVED: CHIEF ENGINEERING DIVISION DATE:
SCALE: AS SHOWN SPEC. NO.
DRAWING NUMBER 29-02-38
SHEET OF

REFERENCE NO. M7.1

507202M7(1=1)

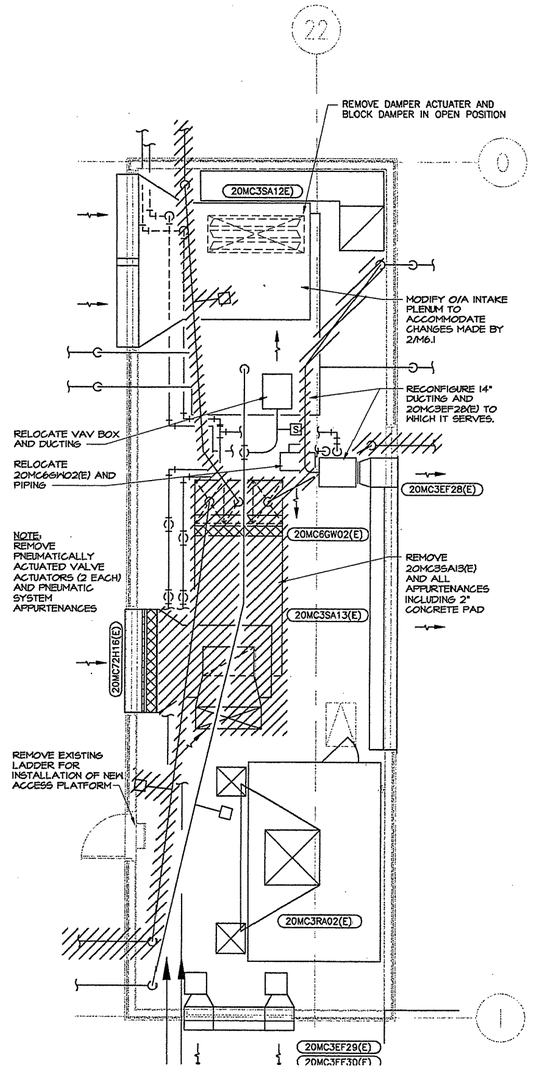

1 M6.1 M6.1 **FAN ROOM 201- DEMOLITION**

SCALE: 1/4"=1'-0"

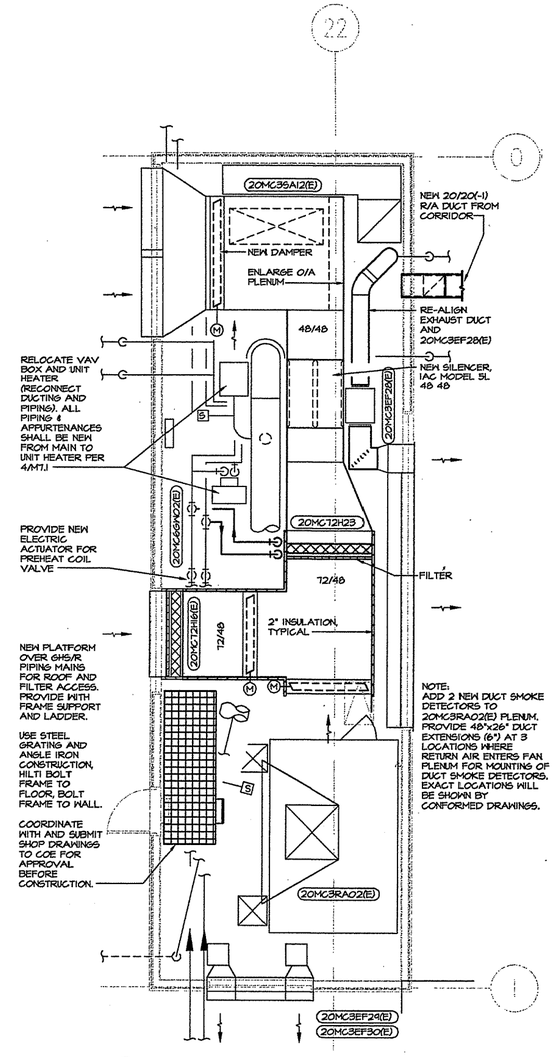

2 M6.1 M6.1 **FAN ROOM 201- NEW WORK**

SCALE: 1/4"=1'-0"

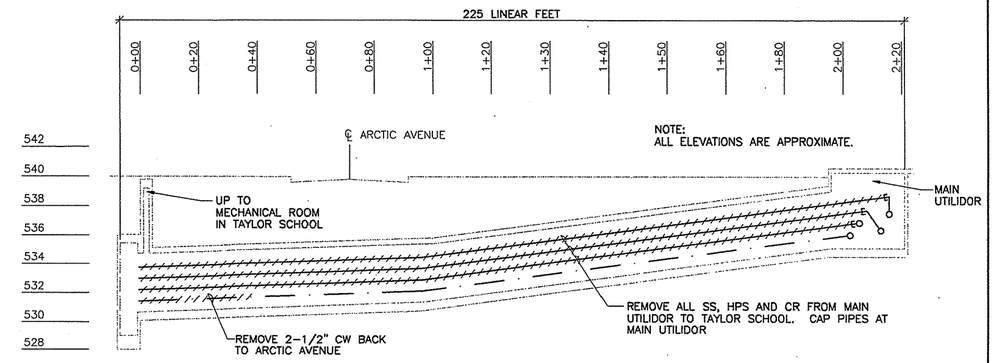

3 M6.1 M6.1 **TAYLOR SCHOOL UTILIDOR SECTION- DEMOLITION**

SCALE: 1" = 20' (HORIZ.)

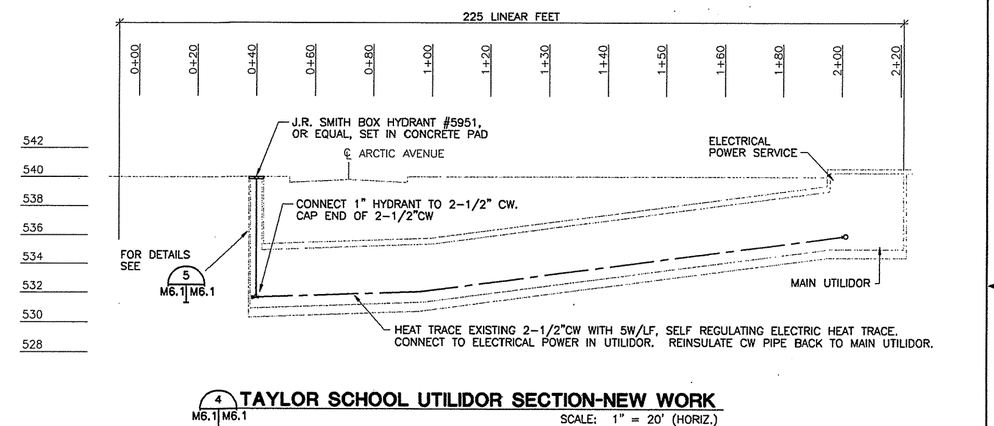

4 M6.1 M6.1 **TAYLOR SCHOOL UTILIDOR SECTION-NEW WORK**

SCALE: 1" = 20' (HORIZ.)

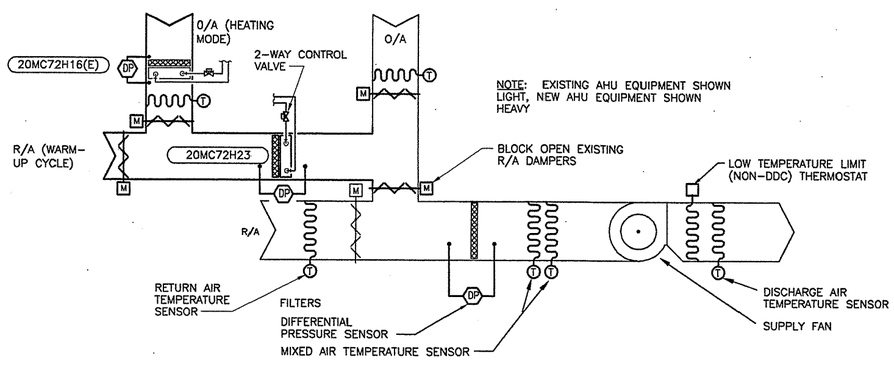

5 M6.1 M6.1 **20MC3SA12(E) CONTROLS SCHEMATIC**

SCALE: 1/4"=1'-0"

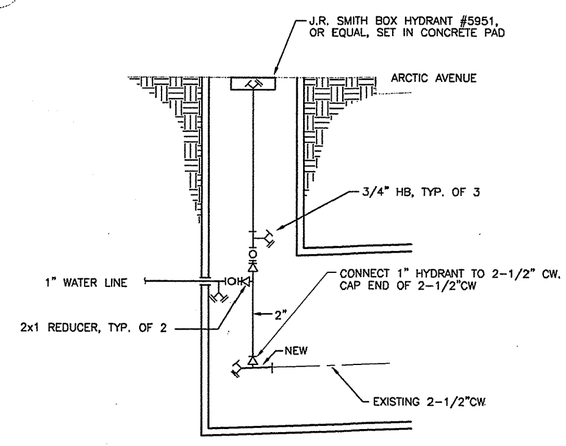

5 M6.1 M6.1 **IRRIGATION SYSTEM PIPING IN UTILIDOR DETAIL**

SCALE: NONE

REV.	DATE	C.O.	ACTION	DESCRIPTION	BY	APP'D.

CONTRACTOR CONTRACT NO.

CITY STATE

RECOMMENDED: PRIME CONTRACTOR | APPROVED: RESIDENT ENGINEER | DATE:

USKH — A quarter century of design for Alaskans

ALASKA DISTRICT CORPS OF ENGINEERS ANCHORAGE, ALASKA

DESIGNED: SVB
DRAWN: LDS/EFH
TRACED:
CHECKED: SVB
SUBMITTED:
CH. SECT.

BEN EIELSON JR./SR. HIGH SCHOOL – PHASE 3
EIELSON AIR FORCE BASE, ALASKA
MECHANICAL
FAN ROOM 201 PLANS AND UTILIDOR PIPING CONNECTIONS

RECOMMENDED: CHIEF, MILITARY TECHNICAL ENGINEERING BRANCH | APPROVED: CHIEF ENGINEERING DIVISION | DATE:

SCALE: AS SHOWN | SPEC. NO.

DRAWING NUMBER 29-02-38

SHEET OF

REFERENCE NO. M6.1

507202M62 (1=1)

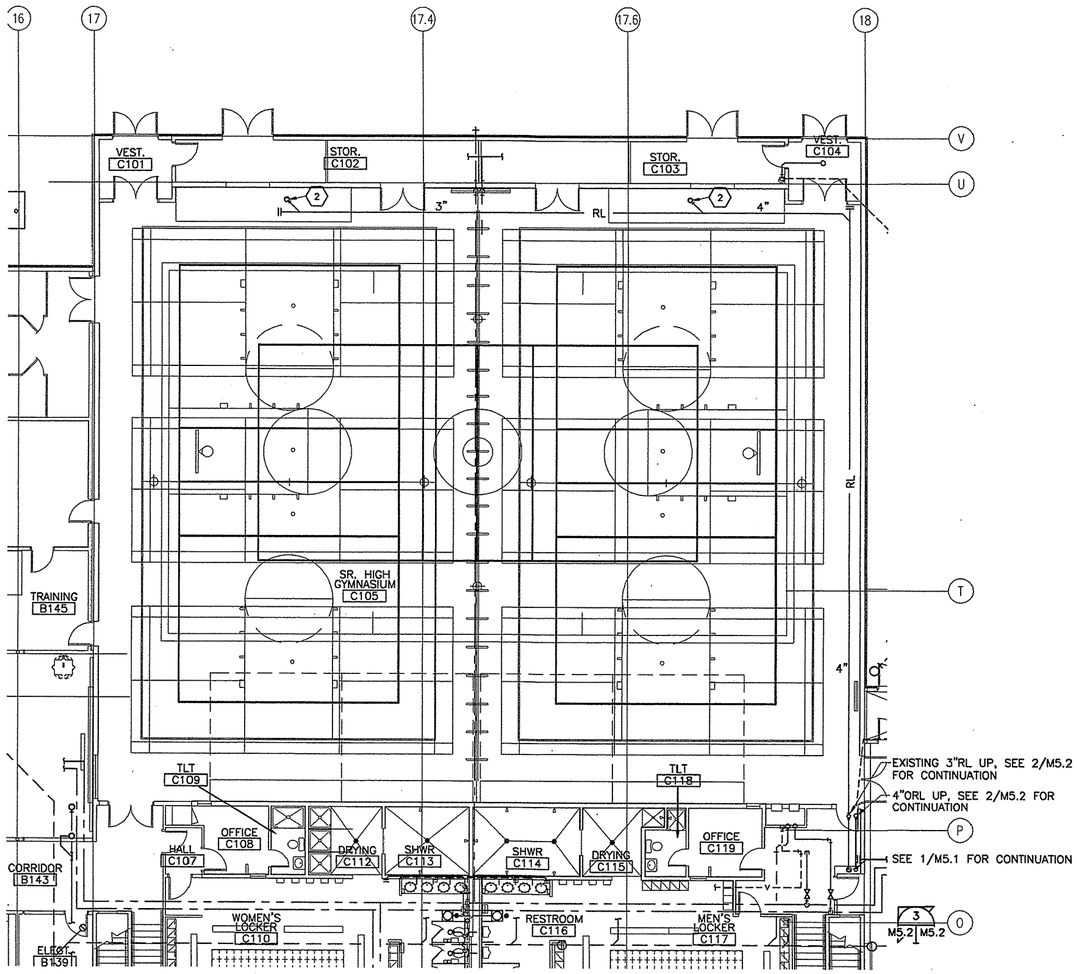

1 M5.2 M5.2 **GYMNASIUM RAIN LEADER PLAN**

SCALE: 1/8"=1'-0"

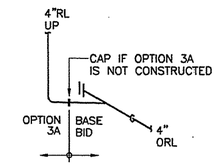

3 M5.2 M5.2 **ORL PIPING ISOMETRIC**

SCALE: NONE

SHEET NOTES
(1) NEW 4" ORL UP TO ORD-1. HEAT TRACE AND INSULATE.
(2) EXTEND EXISTING RL UP TO NEW 4" RD-1. PROVIDE REDUCERS AS REQUIRED. HEAT TRACE AND REINSULATE.
(3) REFERENCE DRAWING 1/A4.2. REPLACE EXISTING FLOOR SINK WITH NEW FLOOR SINK IN JANITOR'S ROOM NEAR GRID 18/H. NEW FLOOR SINK IS FURNISHED BY SCHOOL DISTRICT, INSTALLED BY CONTRACTOR. COORDINATE WITH COE TO OBTAIN FLOOR SINK.

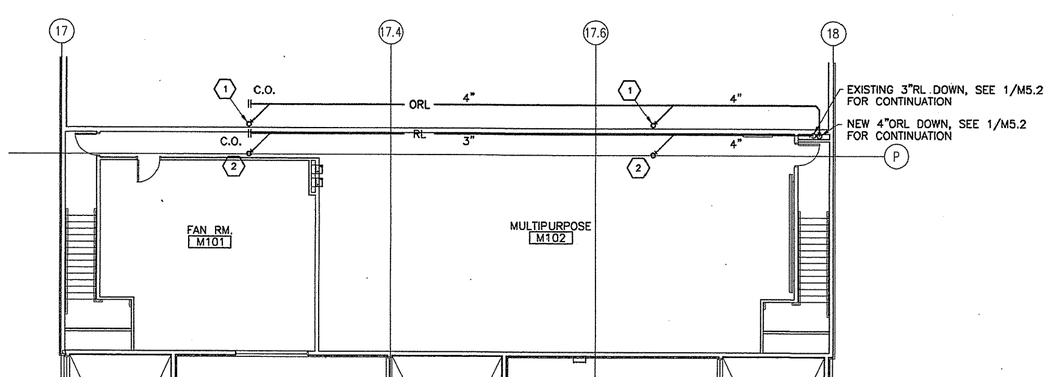

2 M5.2 M5.2 **MEZZANINE RAIN LEADER PLAN**

SCALE: 1/8"=1'-0"

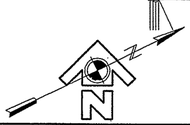

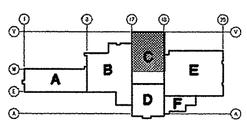

REV.	DATE	C.O.	ACTION	DESCRIPTION	BY	APP'D.

CONTRACT NO.

CONTRACTOR

CITY STATE

RECOMMENDED: PRIME CONTRACTOR

APPROVED: RESIDENT ENGINEER

DATE:

USKH — A quarter century of design for Alaskans

ALASKA DISTRICT
CORPS OF ENGINEERS
ANCHORAGE, ALASKA

DESIGNED: SVB
DRAWN: LDS
TRACED:
CHECKED: SVB
SUBMITTED:
CH. SECT.

BEN EIELSON JR./SR. HIGH SCHOOL – PHASE 3
EIELSON AIR FORCE BASE, ALASKA
MECHANICAL
PLUMBING PLANS AND DETAILS

RECOMMENDED: CHIEF, MILITARY TECHNICAL ENGINEERING BRANCH

APPROVED: CHIEF ENGINEERING DIVISION

DATE:

SCALE: AS SHOWN

SPEC. NO.

DRAWING NUMBER 29-02-38

SHEET OF

507202M52 (1=1)

REFERENCE NO. M5.2

CORPS OF ENGINEERS

U. S. ARMY

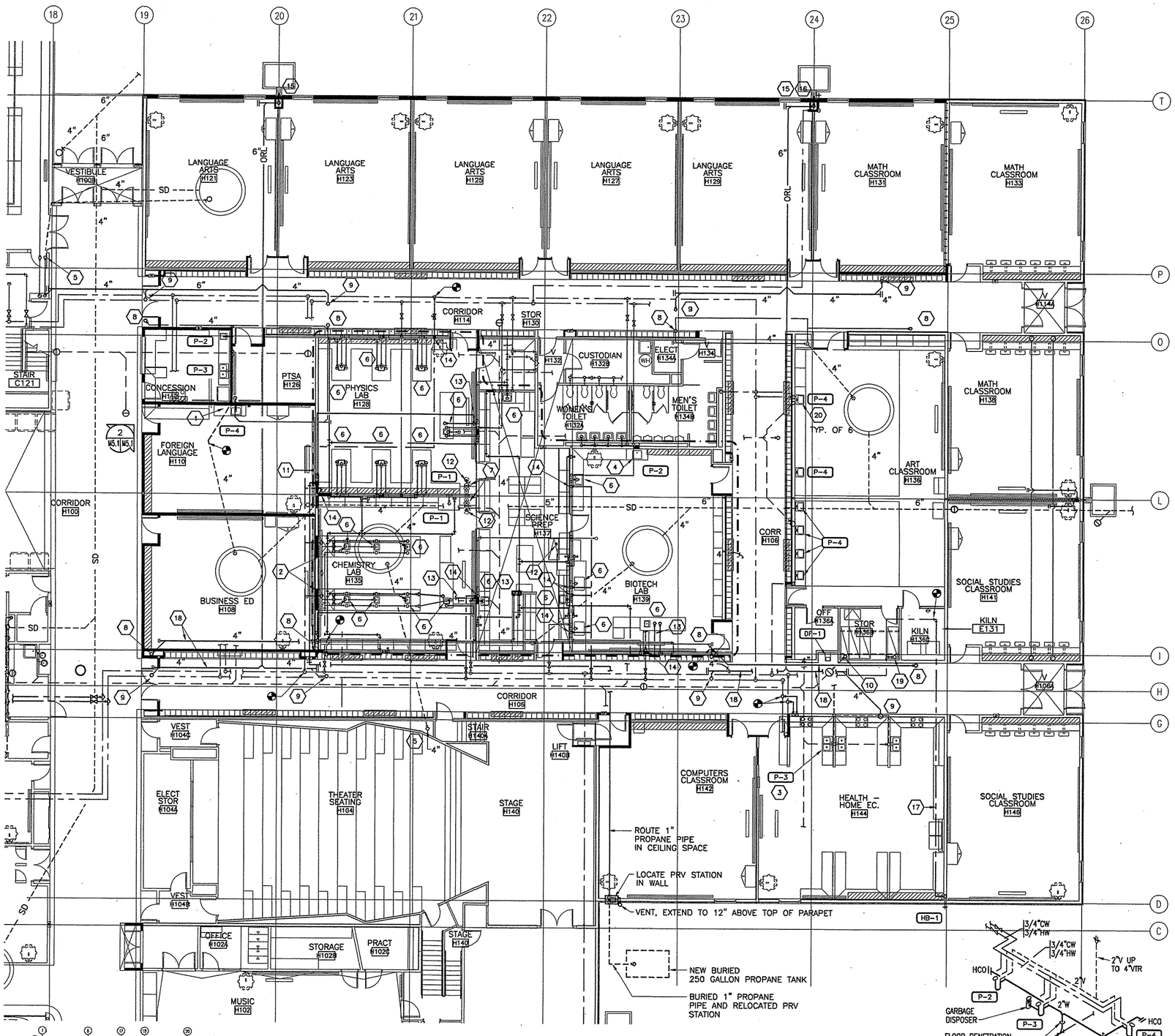

1 AREA 'E' FLOOR PLAN- PLUMBING
M5.1 M5.1
SCALE: 1/8"=1'-0"

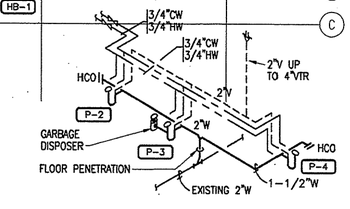

2 PLUMBING ISOMETRIC ROOMS E112 AND E114
M5.1 M5.1
SCALE: NONE

GENERAL NOTES

1. CONTRACTOR TO FIELD VERIFY ALL SIZES OF EXISTING PIPING.
2. PROVIDE WATER HAMMER ARRESTERS ON ALL NEW PLUMBING. SIZE AND LOCATE ARRESTORS PER MANUFACTURER'S RECOMMENDATIONS.
3. NOT ALL EXISTING PIPING IS SHOWN TO PLUMBING FIXTURES THAT ARE TO REMAIN.
4. NEW WORK IS SHOWN WITH HEAVY LINES.
5. UNLESS OTHERWISE NOTED ROUTE WATER PIPING IN CEILING SPACE.
6. UNLESS OTHERWISE NOTED ROUTE RAIN LEADER AND OVERFLOW RAIN LEADER PIPING AT 1/8" PER FT.

SHEET NOTES

1. REROUTE EXISTING UNDERSLAB RAIN LEADER PIPING AS REQUIRED TO ACCOMMODATE NEW WALL CONFIGURATIONS. ROUTE VERTICAL PIPING IN WALL.
2. INSTALL LABORATORY PIPING IN NEW SHAFTS AND TRENCH. CONNECT TO EXISTING PIPING.
3. INSTALL NEW SINK AND GARBAGE DISPOSER AT THIS LOCATION. UPSIZE EXISTING 1/2" HW AND CW SUPPLY PIPING TO 3/4" BACK TO MAINS. CONNECT NEW HW AND CW. CONNECT NEW 1-1/2"V AND 3" WASTE TO EXISTING.
4. CONNECT NEW HW, CW, WASTE AND VENT TO EXISTING PLUMBING PIPING IN WALL.
5. EXISTING 4"RL AND NEW 4"ORL UP. SEE 2/M5.2 FOR CONTINUATION. (OPTION 3A)
6. PROVIDE NEW LABORATORY SINKS, TURRETS, GAS COCKS AND WATER SERVICE FIXTURES AT LABORATORY CASEWORK IN ROOMS H128, H135, H137 AND H139. CONNECT TO GAS AND WATER PIPING. PROVIDE NEW HW FIXTURES AND 1/2"HW PIPING TO ALL LABORATORY STATIONS. SEE SECTION 12345 FOR PRODUCT SPECIFICATIONS.
7. INSTALL NEW EMERGENCY EYEWASH AND DRENCH SHOWERS AT THESE LOCATIONS. CONNECT TO EXISTING 1-1/4"CW.
8. EXTEND EXISTING RL TO NEW 4"RD-1. PROVIDE REDUCERS AS REQUIRED. INSULATE.
9. NEW 4"ORL UP TO 4" ORD-1. INSULATE.
10. CONNECT 2"WASTE TO EXISTING CLEANOUT PIPING. ROUTE UP TO FAN ROOM E202.
11. NEW PROPANE PIPING AND NEW SHUTOFF SYSTEMS THIS AREA, SEE 7/M7.1.
12. EXISTING FLOOR DRAIN, TYP.
13. 1/2"HW AND 1/2" PROPANE BELOW SLAB. SAWCUT EXISTING FLOOR AS REQUIRED. FOR EMERGENCY PROPANE SHUTOFF AND ALARM SEE 6 AND 7/M7.1.
14. ROUTE NEW 1/2"HW PIPING IN WALL & THROUGH CABINETS TO LABORATORY FIXTURES.
15. 6" ORL DOWN TO NEW SPLASHBLOCK. SEE DETAIL 1/M7.1.
16. REROUTE EXISTING HOSE BIBB PIPING AS REQUIRED TO ACCOMMODATE NEW RAIN LEADER PIPING.
17. NEW 3/4" CW TO HB-1. ROUTE IN CEILING SPACE.
18. ROUTE NEW RL AND ORL PIPING IN TRUSS SPACE (ABOVE GWB).
19. EXISTING 1/2"CW UP TO FAN ROOM.
20. CONNECT CW, HW, AND VENT TO NEW SINK AND FAUCETS. EXTEND PIPING AS REQUIRED. CONNECT NEW WASTE TO EXISTING SEDIMENT TRAP.

REV.	DATE	C.O.	ACTION	DESCRIPTION	BY	APP'D.

CONTRACT NO.
CONTRACTOR
CITY STATE
RECOMMENDED: PRIME CONTRACTOR
APPROVED: RESIDENT ENGINEER
DATE:

USKH — A quarter century of design for Alaskans

ALASKA DISTRICT
CORPS OF ENGINEERS
ANCHORAGE, ALASKA

DESIGNED: SVB
DRAWN: LDS
TRACED:
CHECKED: SVB
SUBMITTED:
CH. REPT.

BEN EIELSON JR./SR. HIGH SCHOOL - PHASE 3
EIELSON AIR FORCE BASE, ALASKA
MECHANICAL
PLUMBING
FLOOR PLANS

RECOMMENDED: CHIEF, MILITARY TECHNICAL ENGINEERING BRANCH
APPROVED: CHIEF ENGINEERING DIVISION
DATE:
SCALE: AS SHOWN
SPEC. NO.
DRAWING NUMBER 29-02-38
SHEET OF

REFERENCE NO. M5.1

507202M51 (1=1)

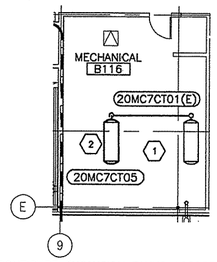

NOTE:

1. CONFIGURE EXPANSION TANKS ACCORDING TO JR. HIGH SCHOOL HEATING SYSTEM SCHEMATIC
2. INSTALL EXPANSION TANK AS HIGH AS POSSIBLE; HANG FROM ROOF STRUCTURE

1 PARTIAL AREA 'B' FLOOR PLAN

SCALE: 1/8"=1'-0"

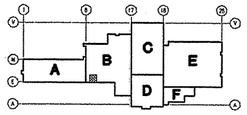

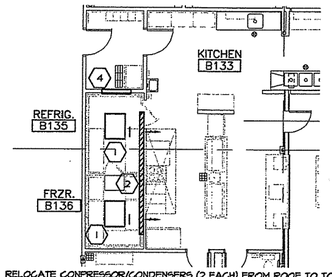

1. RELOCATE COMPRESSOR/CONDENSERS (2 EACH) FROM ROOF TO TOP OF FREEZER/REFRIGERATOR. PROVIDE RAIL SUPPORT ON FREEZER/REFRIGERATOR UNITS TO WHICH THEY SERVE ACCORDING TO MANUFACTURER'S RECOMMENDATIONS.
2. REMOVE GWB FROM BOTH SIDES OF WALL ABOVE CEILING, APPROXIMATELY 16' WIDE x 4' HIGH.
3. DIRECT RADIATOR COOLING FAN DISCHARGE TOWARDS OPENING IN GWB.
4. PROVIDE 36x36 ACCESS DOOR OR LARGER AS REQUIRED TO INSTALL COMPRESSOR/CONDENSER UNITS.

1 PARTIAL AREA 'B' FLOOR PLAN

SCALE: 1/8"=1'-0"

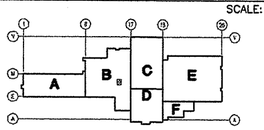

507202M41(1=1)

REV.	DATE	C.O.	ACTION	DESCRIPTION	BY	APP'D.

CONTRACTOR _____ CONTRACT NO. _____

CITY _____ STATE _____

RECOMMENDED: _____ PRIME CONTRACTOR | APPROVED: _____ RESIDENT ENGINEER | DATE: _____

USKH 25 YEARS — A quarter century of design for Alaskans

ALASKA DISTRICT
CORPS OF ENGINEERS
ANCHORAGE, ALASKA

DESIGNED: SVB
DRAWN: LDS
TRACED:
CHECKED: SVB
SUBMITTED:
CH. _____ REGT.

BEN EIELSON JR./SR. HIGH SCHOOL – PHASE 3
EIELSON AIR FORCE BASE, ALASKA
MECHANICAL
HEATING
FLOOR PLANS

RECOMMENDED: _____ CHIEF, MILITARY TECHNICAL ENGINEERING BRANCH | APPROVED: _____ CHIEF ENGINEERING DIVISION | DATE:

SCALE: AS SHOWN | SPEC. NO.

DRAWING NUMBER 29-02-38

SHEET _____ OF _____

REFERENCE NO. M4.1A

CORPS OF ENGINEERS

U. S. ARMY

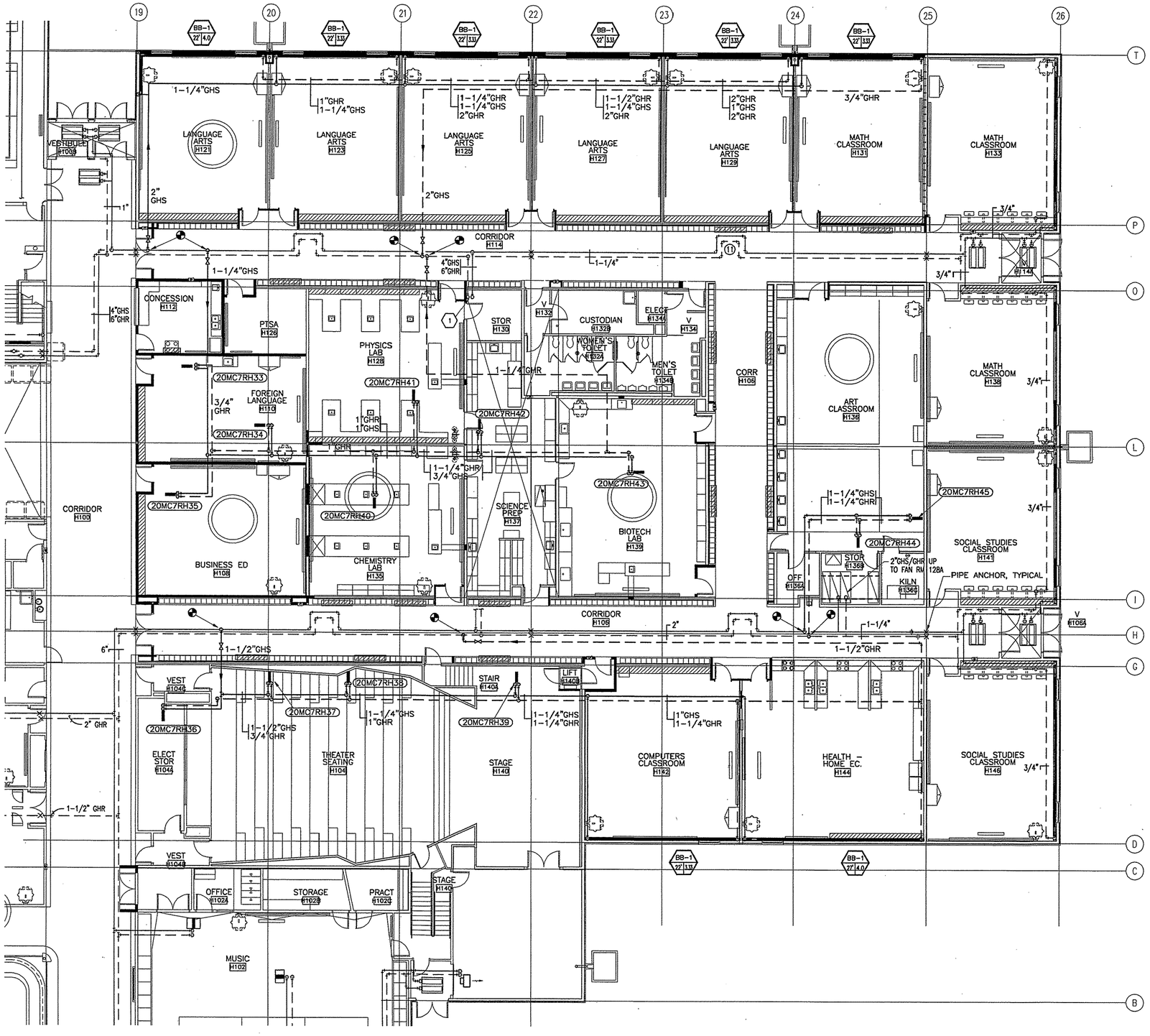

1 AREA 'E' FLOOR PLAN- HEATING
M4.1 M4.1
SCALE: 1/8"=1'-0"

SHEET NOTES
1 PROVIDE BB-1 BASEBOARD ENCLOSURE ONLY (APPROXIMATELY 26 LINEAR FEET) TO EXISTING FIN TUBE EXPOSED IN ISS A120A BY REMOVAL OF EXISTING COUNTER TOP, SEE ARCHITECTURAL DRAWING A4.1.

GENERAL NOTES
1. UNLESS OTHERWISE NOTED, RUNOUT PIPES TO TERMINAL HEATING EQUIPMENT ARE 3/4".

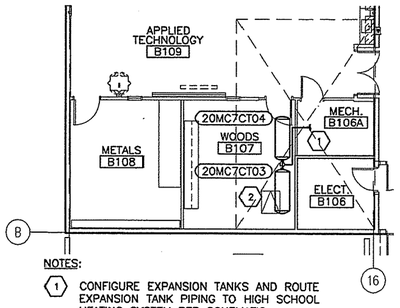

NOTES:

1. CONFIGURE EXPANSION TANKS AND ROUTE EXPANSION TANK PIPING TO HIGH SCHOOL HEATING SYSTEM PER SCHEMATIC
2. INSTALL EXPANSION TANKS AS HIGH AS POSSIBLE; HANG FROM ROOF STRUCTURE

1 PARTIAL AREA 'B' FLOOR PLAN
M4.1
SCALE: 1/8"=1'-0"

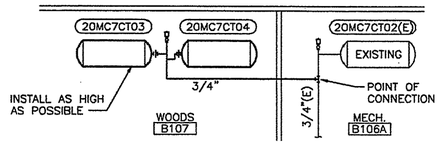

2 HIGH SCHOOL EXP. TANK SCHEMATIC
M4.1
SCALE: NONE

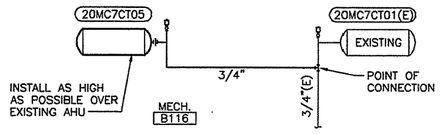

3 JR. HIGH SCHOOL EXP. TANK SCHEMATIC
M4.1
SCALE: NONE

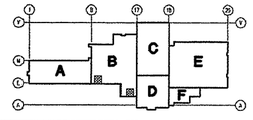

REV.	DATE	C.O.	ACTION	DESCRIPTION	BY	APP'D.

CONTRACT NO.

CONTRACTOR

CITY STATE

RECOMMENDED: PRIME CONTRACTOR | APPROVED: RESIDENT ENGINEER | DATE:

USKH A quarter century of design for Alaskans

ALASKA DISTRICT CORPS OF ENGINEERS ANCHORAGE, ALASKA

DESIGNED: SVB
DRAWN: LDS
TRACED:
CHECKED: SVB
SUBMITTED:
DR. SECT.

BEN EIELSON JR./SR. HIGH SCHOOL - PHASE 3
EIELSON AIR FORCE BASE, ALASKA

MECHANICAL

HEATING FLOOR PLANS

RECOMMENDED: CHIEF, MILITARY TECHNICAL ENGINEERING BRANCH | APPROVED: CHIEF ENGINEERING DIVISION | DATE:

SCALE: AS SHOWN | SPEC. NO.

DRAWING NUMBER 29-02-38

SHEET OF

REFERENCE NO. M4.1

507202M41(1=1)

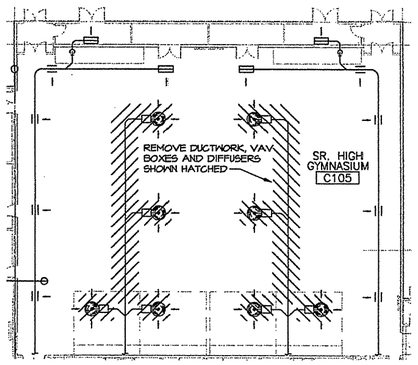

1 PARTIAL AREA 'C' FLOOR PLAN - DEMO
M3.1A
SCALE: 1/16"=1'-0"

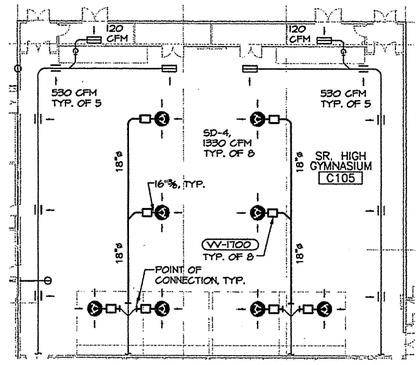

NOTE: BALANCE SYSTEM (20MC35F16(E)) PER AIRFLOWS SHOWN

2 PARTIAL AREA 'C' FLOOR PLAN - NEW
M3.1A
SCALE: 1/16"=1'-0"

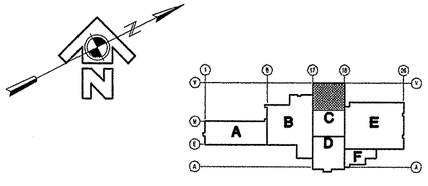

507202M31 (1=1)

REV.	DATE	C.O.	ACTION	DESCRIPTION	BY	APP'D.

CONTRACT NO.

CONTRACTOR

CITY STATE

RECOMMENDED: PRIME CONTRACTOR | APPROVED: RESIDENT ENGINEER | DATE:

USKH A quarter century of design for Alaskans

ALASKA DISTRICT
CORPS OF ENGINEERS
ANCHORAGE, ALASKA

DESIGNED: SVB
DRAWN: LDS
TRACED:
CHECKED: SVB
SUBMITTED:
CK. REST.

BEN EIELSON JR./SR. HIGH SCHOOL - PHASE 3
EIELSON AIR FORCE BASE, ALASKA
MECHANICAL
VENTILATION
FLOOR PLAN - NEW WORK

RECOMMENDED: CHIEF, MILITARY TECHNICAL ENGINEERING BRANCH | APPROVED: CHIEF ENGINEERING DIVISION | DATE:

SCALE: AS SHOWN | SPEC. NO.

DRAWING NUMBER 29-02-38

SHEET OF

REFERENCE NO. M3.1A

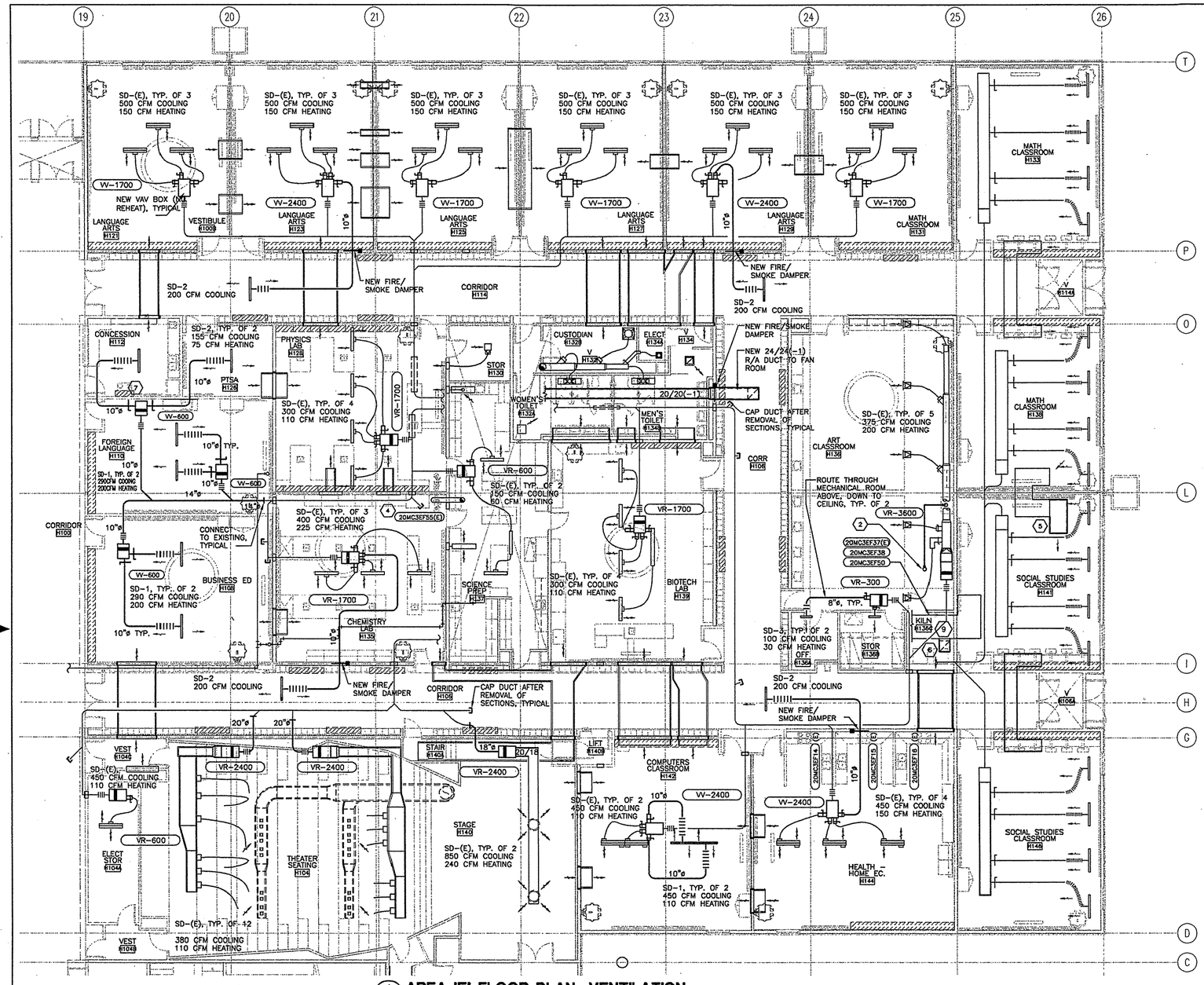

1 M3.1 M3.1 **AREA 'E' FLOOR PLAN- VENTILATION**
SCALE: 1/8"=1'-0"

SHEET NOTES

1. TEMPORARILY SUPPORT ALL CEILING DIFFUSERS AND GRILLES AFTER CEILING SYSTEMS HAVE BEEN REMOVED. COORDINATE WITH ARCHITECTURAL FOR CEILING MODIFICATIONS. REINSTALL CEILING DIFFUSERS IN NEW CEILING SYSTEMS.
2. CONNECT 14"ø TO NEW SPRAY BOOTH (20MC3EF55) AND ROUTE UP TO RH-1 AT ROOF.
3. RELOCATE EXISTING 4 FOOT SLOT DIFFUSER AND TWO EXISTING SPRINKLERS TO NEW SUSPENDED CEILING - SEE ARCHITECTURAL.
4. PROVIDE ELECTRICAL POWER TO 20MC3EF55(E).
5. CONNECT NEW SECTION OF 36/36(-1) TRANSFER AIR DUCT TO EXISTING AS SHOWN.
6. CONNECT 22/22(-1) TO R/A PLENUM, ROUTE TO NEW 22/22 RG-1 IN CEILING OF KILN H136C.
7. RELOCATED RANGE HOOD. RECONNECT DUCTING TO ROOF HOOD.
8. RECIRCULATING RANGE HOOD. NO DUCTWORK.
9. CONNECT NEW EXHAUST FANS 20MC3EF38 AND20MC3EF50 TO EXISTING KILNS AND TO EXISTING EXHAUST DUCT STUBBED DOWN THROUGH ROOF.

GENERAL NOTES

1. VAV BOX INSTALLATION: CONNECT NEW VAV BOXES TO EXISTING S/A DUCTWORK INLET WITH 12" LONG FLEXIBLE DUCT.

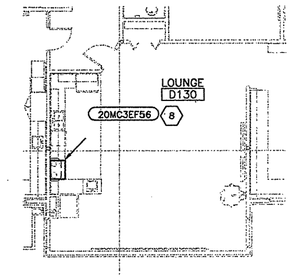

2 M3.1 M3.1 **LOUNGE D130 (AREA D) - VENTILATION**
SCALE: 1/8"=1'-0"

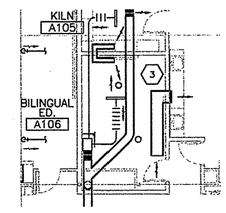

3 M3.1 M3.1 **BILINGUAL ED. A106 (AREA A) - VENTILATION**
SCALE: 1/8"=1'-0"

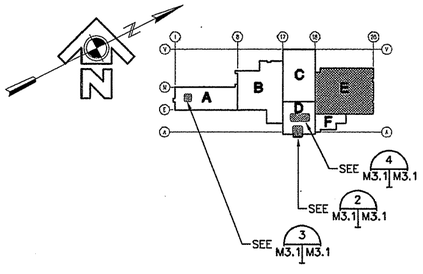

NOTES:

1. ADD RG-1 TO THE FOLLOWING ROOM'S SUSPENDED CEILINGS: H142, H144, H131, H129, H127, H125, H123, H121, H112, H126, H110, H108, H128, H135, H137, AND H139. FINAL LOCATIONS TO BE SHOWN ON CONFORMED DRAWINGS.
2. ADD RG-1 TO 24/24(-1) DUCT WHICH TERMINATES AT CORR H106 CEILING.
3. ADD RG-2 TO OFF H136A AND STOR H136B. ADD RG-2 TO SOFFIT OF ART CLASSROOM H136 JUST OUTSIDE OF OFF H136A AND STOR H136B. CONNECT WITH 10/10(-1) TRANSFER DUCT (2 EACH) ROUTED THROUGH MECHANICAL ROOM AND SOFFIT ENCLOSURE ABOVE.
4. ADD 20/20(-1) TRANSFER AIR DUCT THROUGH WALL AND ABOVE CEILING BETWEEN PTSA H126 AND FOREIGN LANGUAGE H110. DUST SHALL BE 6' LONG AND TERMINATE WITH 90 DEGREE FITTING TURNED UP AT ONE END, EXTENDED 12" ABOVE TOP OF 6' LENGTH.
5. ADD RG-1 TO THE SUSPENDED CEILING OF BILINGUAL ED. A106.

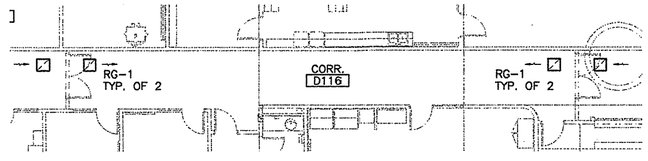

4 M3.1 M3.1 **CORRIDOR D116 (AREA D) - VENTILATION**
SCALE: 1/8"=1'-0"

REFERENCE NO. M3.1

REV.	DATE	C.O.	ACTION	DESCRIPTION	BY	APP'D.

CONTRACT NO.
CONTRACTOR
CITY STATE
RECOMMENDED: PRIME CONTRACTOR
APPROVED: RESIDENT ENGINEER
DATE:

USKH — A quarter century of design for Alaskans

ALASKA DISTRICT
CORPS OF ENGINEERS
ANCHORAGE, ALASKA

DESIGNED: SVB
DRAWN: LDS
TRACED:
CHECKED: SVB
SUBMITTED:
CH. SECT.

BEN EIELSON JR./SR. HIGH SCHOOL - PHASE 3
EIELSON AIR FORCE BASE, ALASKA
MECHANICAL
VENTILATION
FLOOR PLAN - NEW WORK

RECOMMENDED: CHIEF, MILITARY TECHNICAL ENGINEERING BRANCH
APPROVED: CHIEF ENGINEERING DIVISION
DATE:
SCALE: AS SHOWN
SPEC. NO.
DRAWING NUMBER 29-02-38
SHEET OF

507202M31 (1=1)

AIR OUTLET SCHEDULE

DESIG.	USE	UNIT SIZE	NECK SIZE	THROW	SLOTS	FINISH	BASIS OF DESIGN
SD-1	SUPPLY	48"	10"ø	2-WAY	3	WHITE	TRANE MODEL VSLD
SD-2	SUPPLY	48"	10"ø	2-WAY	2	WHITE	TRANE MODEL VSLD
SD-3	SUPPLY	24"	8"ø	2-WAY	2	WHITE	TRANE MODEL VSLD
SD-4	SUPPLY	–	16"ø	–	–	WHITE	TITUS MODEL TMRA
RG-1	RETURN	24"x24"	–	–	–	WHITE	TITUS MODEL BR WITH 24" T-BAR FOR INSTALLATION IN SUSPENDED CEILING
RG-2	RETURN	10"x10"	–	–	–	WHITE	TITUS MODEL BR

HEATING COIL SCHEDULE

DESIGNATION	SYS.	MBH	ACFM	SIZE W/H (IN.)	FACE VEL. (FPM)	ENTER AIR TEMP (°F)	LEAVE AIR TEMP (°F)	AIR PRESS DROP (IN WG)	GPM	ENTER LIQ TEMP (°F)	LEAVE LIQ TEMP (°F)	LIQ PRESS DROP (FT)	FIN SPACE (FPI)	COIL ROWS	COIL TURB	BASIS OF DESIGN
20MC72H16(E)	20MC3SA12(E)	1036	10,000	72/48	417	-55	40	0.5	77	180	150	–	–	–	–	–
20MC72H23	20MC3SA12(E)	218	10,000	72/48	417	35	55	0.1	16	180	150	–	8	1	YES	PACE

NOTES:
1. HEATING COIL MEDIUM SHALL BE 50% PROPYLENE GLYCOL AND 50% WATER SOLUTION.

CONTROL VALVE SCHEDULE

DESIGNATION	SERVICE	FLOW MEDIUM	CONN. SIZE	FLOW RATE	CV RATING	VALVE LOCATION	BASIS OF DESIGN
CV-14(E)	20MC72H16(E)	50/50 P.G./WATER	2-1/2"	77	–	FAN RM. E201 PHC	HONEYWELL
CV-24	20MC72H23	50/50 P.G./WATER	–	16	–	FAN RM. E201 HC	HONEYWELL
SMALL RHC/RP	FOR GPM <1.8	50/50 P.G./WATER	1/2	VARIES	1.0	VARIES	HONEYWELL V-5011
LARGE RHC/RP	FOR GPM >1.8	50/50 P.G./WATER	1/2	VARIES	1.6	VARIES	HONEYWELL V-5011

REHEAT COIL SCHEDULE*

FNSB/SD NUMBER	LOCATION	CLG CFM (MAXIMUM VAV SETPOINT)	HTG CFM (MINIMUM VAV SETPOINT)	LEAVING AIR TEMP. °F	MBTU/H	GPM
20MC7RH33	FOREIGN LANGUAGE H110	310	150	–	6.0	0.67
20MC7RH34	FOREIGN LANQUAGE H110	450	300	–	11.9	1.33
20MC7RH35	BUSINESS ED H108	580	450	–	11.9	1.33
20MC7RH36	ELECTRICAL STORAGE H104A	450	110	–	3.0	0.33
20MC7RH37	THEATER SEATING H104	2280	660	–	20.9	2.33
20MC7RH38	THEATER SEATING H104	2280	660	–	20.9	2.33
20MC7RH39	STAGE H140	1700	480	–	15.0	1.67
20MC7RH40	CHEMISTRY LAB H135	1200	675	–	18.0	2.00
20MC7RH41	PHYSICS LAB H128	1200	440	–	15.0	1.67
20MC7RH42	SCIENCE PREP H137	300	120	–	9.0	1.00
20MC7RH43	BIOTECH LAB H139	1200	440	–	15.0	1.67
20MC7RH44	ART CLASSROOM H136	200	60	–	3.0	0.33
20MC7RH45	ART CLASSROOM H136	1875	1000	–	57.0	6.33

*NOTE: ENTERING AIR TEMP. = 65°F, ENTERING LIQUID TEMP. = 180°F
LEAVING LIQUID TEMP. = 160°F, FLUID = 50/50 P.G./WATER

MECHANICAL EQUIPMENT SCHEDULE

DESIGNATION	EQUIPMENT	CAPACITY	LOCATION	ELECTRICAL	REMARKS	MANUFACTURER AND MODEL (OR APPROVED EQUAL)
20MC7CT03	EXPANSION TANK	110 GAL. TOTAL, 34 GAL. ACCEPTANCE	–	–	–	AMTROL MODEL AX240
20MC7CT04	EXPANSION TANK	110 GAL. TOTAL, 34 GAL. ACCEPTANCE	–	–	–	AMTROL MODEL AX240
20MC7CT05	EXPANSION TANK	110 GAL. TOTAL, 34 GAL. ACCEPTANCE	–	–	–	AMTROL MODEL AX240

FAN SCHEDULE

DESIGNATION	LOCATION	SERVICE	TYPE	S.C.F.M.	S.P.	ELECTRICAL HP, VOLTS, PHASE	REMARKS	MANUFACTURER AND MODEL (OR PREAPPROVED EQUAL)
20MC3RA02(E)	FAN ROOM E201	EXISTING ROOMS OF AREA E	RETURN	–	–	10, –, –	REMOVE FAN INLET VANES	PROVIDE NEW VFD CONTROLLER
20MC3SA11(E)	FAN ROOM E144	EAST SIDE OF AREA E	VENT/COOLING	–	–	5, 208, 3	EXISTING	PACE
20MC3SA12(E)	FAN ROOM E201	EXISTING ROOMS OF AREA E	VENT/COOLING	–	–	25, 208, 3	REMOVE FAN INLET VANES	PROVIDE NEW VFD CONTROLLER
20MC3EF14(E)	HOME EC. H142	RANGE HOOD	EXHAUST	–	–	–, 115, 1	EXISTING	GENERAL ELECTRIC
20MC3EF15(E)	HOME EC. H142	RANGE HOOD	EXHAUST	–	–	–, 115, 1	EXISTING	GENERAL ELECTRIC
20MC3EF16(E)	HOME EC. H142	RANGE HOOD	EXHAUST	–	–	–, 115, 1	EXISTING	GENERAL ELECTRIC
20MC3EF28(E)	FAN ROOM E201	WOMEN'S E121/MEN'S E126	EXHAUST	–	–	1/2, 115, 1	EXISTING	PACE
20MC3EF29(E)	FAN ROOM E201	CHEMISTRY LAB E116	EXHAUST	–	–	3/4, 208, 3	EXISTING	PACE
20MC3EF30(E)	FAN ROOM E201	SCIENCE PREP E119	EXHAUST	–	–	3/4, 208, 3	EXISTING	PACE
20MC3EF35(E)	FAN ROOM E144	EAST SIDE OF AREA E	RELIEF	4860	0.25	3/4, 208, 1	WALL MTD	GREENHECK MODEL SBE-2L20-7
20MC3EF37(E)	KILN H136C	GENERAL	COOLING	1241	0.5	812W, 115, 1	W/ LEK-TROL	PENN MODEL Z102H – CEILING MOUNTED
20MC3EF38	KILN H136C	KILN	COOLING/EXHAUST	60	0.5	130W, 115, 1	KILN MTD	SKUTT ENVIROMENTAL
20MC3EF50	KILN H136C	KILN	COOLING/EXHAUST	60	0.5	130W, 115, 1	KILN MTD	SKUTT ENVIROMENTAL
20MC3EF55	ART ROOM H136	SPRAY BOOTH	EXHAUST	773	3/4"	1/3, 110, 1	–	SEE ARCHITECTURAL
20MC3EF56	LOUNGE D130	KITCHEN RANGE	CARBON FILTER	–	–	–, 110, 1	–	NON-DUCTED RANGE HOOD
20MC3EF57(E)	CHEMISTRY H135	FUME BOOTH	EXHAUST	–	–	–	RECONNECT ELECTRICAL	KEWAUNEE
20MC3EF58(E)	CONCESSION H112	KITCHEN RANGE	–	–	–	–, 110, 1	RE-USE EXISTING	–

PLUMBING FIXTURE CONNECTION SCHEDULE

NO.	FIXTURE	TRAP	WASTE	VENT	CW	HW	REMARKS
P-1	EYEWASH/SHOWER	–	–	–	1-1/4"	–	EMERGENCY
P-2	SINK (1 COMPARTMENT)	1-1/2"	1-1/2"	1-1/4"	1/2"	1/2"	
P-3	SINK (2 COMPARTMENT)	1-1/2"	1-1/2"	1-1/4"	1/2"	1/2"	WITH GARGABE DISPOSER
P-4	ART ROOM SINK	1-1/2"	1-1/2"	1-1/4"	1/2"	1/2"	
FD-1	FLOOR DRAIN	2"	1-1/2"	1-1/2"	–	–	
DF-1	DRINKING FOUNTAIN WITH CHILLER	1-1/2"	1-1/4"	1-1/4"	1/2"	–	HANDICAPPED ACCESSIBLE

ROOF HOOD SCHEDULE

SYMBOL	LOCATION	FUNCTION	ROUGH OPENNG THROUGH ROOF (INCHES)	MOTORIZED DAMPER	BACKDRAFT DAMPER	SERVICE	BASIS OF DESIGN
RH-1	ARTS ROOM H136	EXHAUST	20/20	NO	YES	20MC3EF55	PENN AIRETTE

BASEBOARD SCHEDULE

DESIGNATION	AVG. LIQUID TEMP (°F)	ENTER. AIR TEMP (°F)	TEMP. C.F.	LIQUID VEL. C.F.	GLYCOL C.F.	TIERS	FACTORED BTU/LF	ELEMENT CATALOG NUMBER (COPPER-ALUMINUM)	ELEMENT SIZE	ELEMENT ENCLOSURE	BASIS OF DESIGN
BB-1	170	65	.61	0.95	0.9	2	1315	C 3/4 435	4-1/4"x3-5/8", 50 FPF	FLAT TOP	STERLING VB AR20

REV.	DATE	C.O.	ACTION	DESCRIPTION	BY	APP'D.

CONTRACT NO.
CONTRACTOR
CITY STATE
RECOMMENDED: PRIME CONTRACTOR
APPROVED: RESIDENT ENGINEER
DATE:

USKH — A quarter century of design for Alaskans

ALASKA DISTRICT
CORPS OF ENGINEERS
ANCHORAGE, ALASKA

DESIGNED: SVB
DRAWN: LDS
TRACED:
CHECKED: SVB
SUBMITTED:
CHI. SECT.

BEN EIELSON JR./SR. HIGH SCHOOL – PHASE 3
EIELSON AIR FORCE BASE, ALASKA
MECHANICAL
SCHEDULES

RECOMMENDED: CHIEF, MILITARY TECHNICAL ENGINEERING BRANCH
APPROVED: CHIEF ENGINEERING DIVISION
DATE:
SCALE: NONE
SPEC. NO.
DRAWING NUMBER 29-02-38
SHEET OF

REFERENCE NO. M1.1

507202M11 (1=1)

CORPS OF ENGINEERS

U. S. ARMY

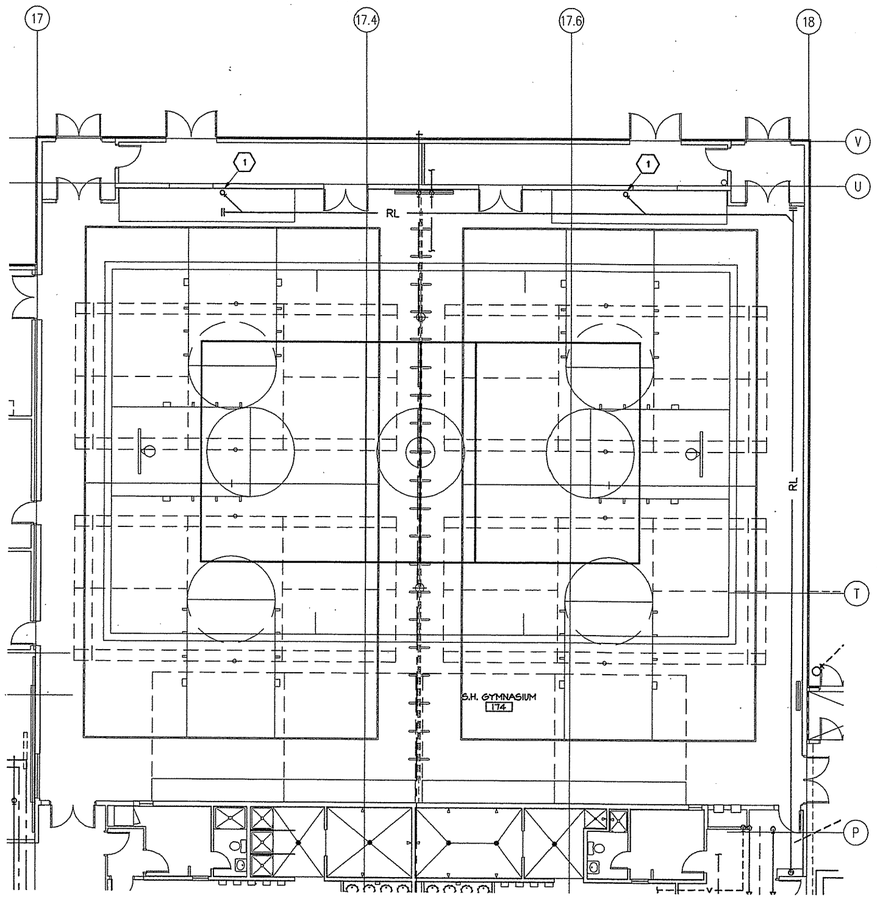

1 M2.3 | M2.3 **GYMNASIUM ROOF DRAIN DEMOLITION PLAN**

SCALE: 1/8"=1'-0"

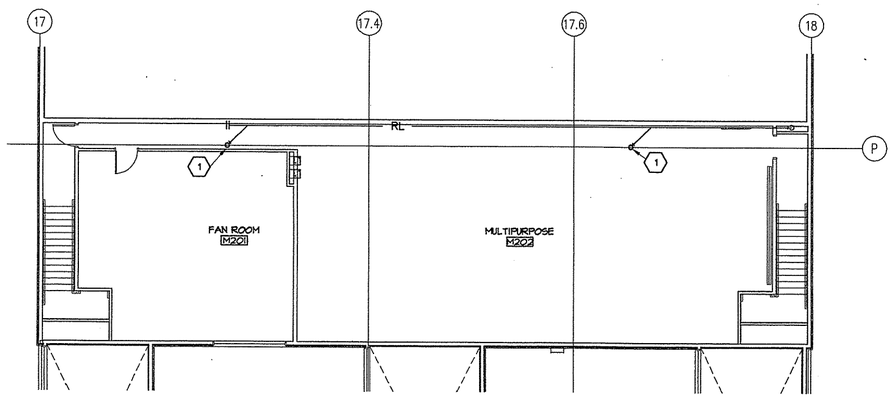

2 M2.3 | M2.3 **MEZZANINE ROOF DRAIN DEMOLITION PLAN**

SCALE: 1/8"=1'-0"

507202M23(1=1)

SHEET NOTES

1. REMOVE EXISTING 3" ROOF DRAIN. SEE 1/M5.1 FOR NEW WORK.

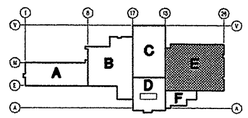

REFERENCE NO. M2.3

REV.	DATE	C.O.	ACTION	DESCRIPTION	BY	APP'D.

CONTRACT NO.

CONTRACTOR

CITY STATE

RECOMMENDED: PRIME CONTRACTOR

APPROVED: RESIDENT ENGINEER

DATE:

USKH — A quarter century of design for Alaskans

ALASKA DISTRICT
CORPS OF ENGINEERS
ANCHORAGE, ALASKA

DESIGNED: SVB
DRAWN: LDS
TRACED:
CHECKED: SVB
SUBMITTED:
OK: REF.

BEN EIELSON JR./SR. HIGH SCHOOL – PHASE 3
EIELSON AIR FORCE BASE, ALASKA

MECHANICAL

GYMNASIUM ROOF DRAINS & CONTROLS DEMOLITION PLANS

RECOMMENDED: CHIEF, MILITARY TECHNICAL ENGINEERING BRANCH

APPROVED: CHIEF ENGINEERING DIVISION

DATE:

SCALE: AS SHOWN

SPEC. NO.

DRAWING NUMBER 29-02-38

SHEET OF

CORPS OF ENGINEERS

U. S. ARMY

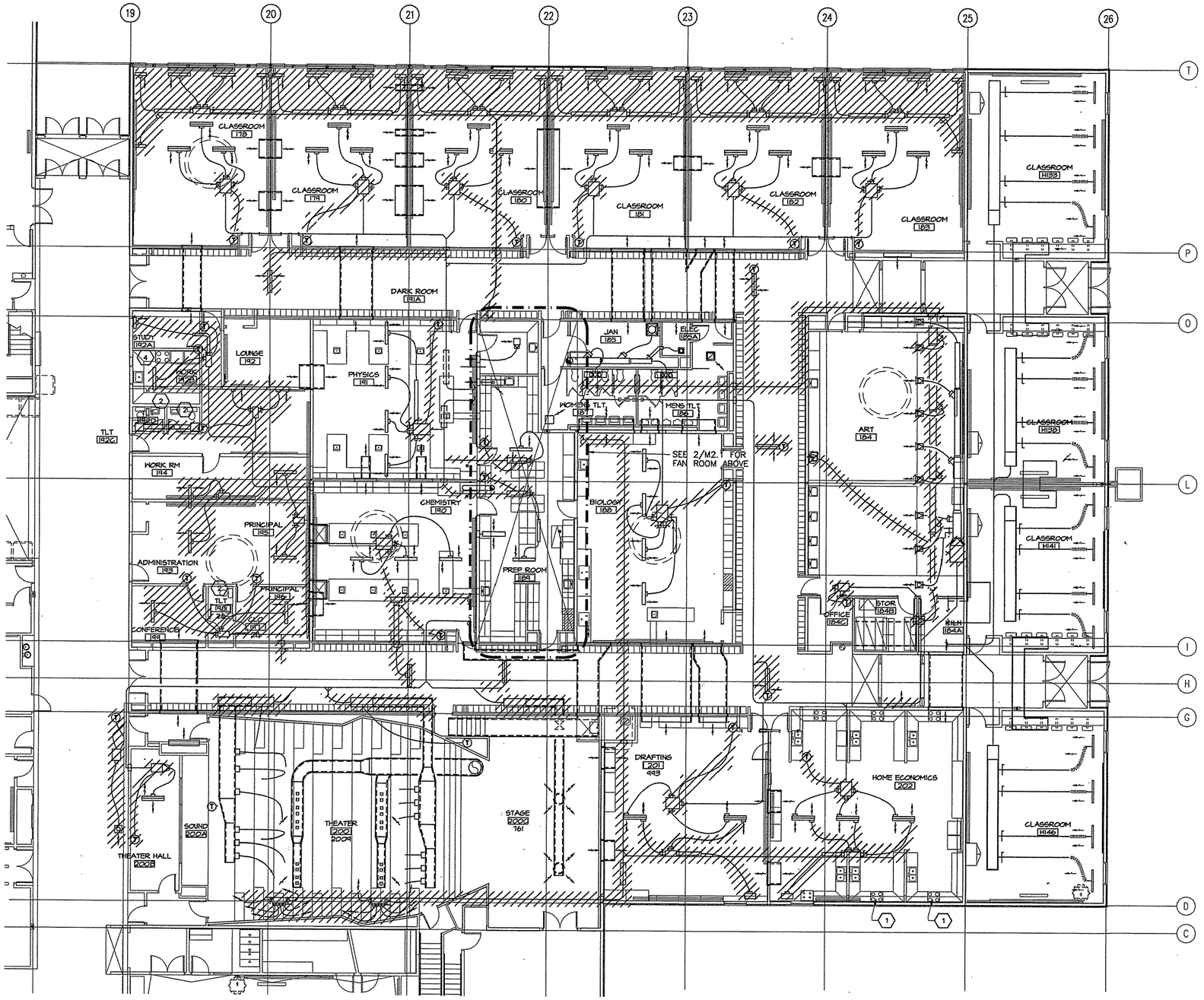

1 AREA 'E' FLOOR PLAN- VENTILATION DEMOLITION
M2.2 | M2.2
SCALE: 1/8"=1'-0"

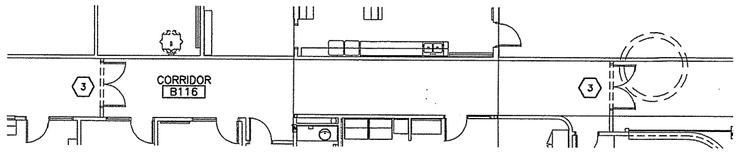

2 CORRIDOR B116 - VENTILATION DEMOLITION
M2.2 | M2.2
SCALE: 1/8"=1'-0"

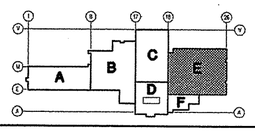

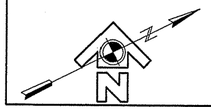

507202M21(1=1)

SHEET NOTES

1. REMOVE RANGE HOOD AND ASSOCIATED DUCTWORK AND ROOF HOOD. PATCH ROOF PENETRATION TO MATCH EXISTING CONSTRUCTION.
2. REMOVE BATHROOM FAN AND ASSOCIATED DUCTWORK AND ROOF HOOD. PATCH ROOF PENETRATION TO MATCH EXISTING CONSTRUCTION.
3. REMOVE TRANSFER AIR GRILLES FROM DOOR FRAMEWORK. PATCH HOLES IN METAL FRAMEWORK LEFT BY SCREWS.
4. RELOCATE RANGE HOOD TO NEW RANGE LOCATION.

GENERAL NOTES

1. REMOVE SYSTEMS SHOWN HATCHED. CAP UNUSED OPENINGS LEFT IN DUCTWORK.

REV.	DATE	C.O.	ACTION	DESCRIPTION	BY	APP'D.

CONTRACT NO.

CONTRACTOR

CITY STATE

RECOMMENDED: PRIME CONTRACTOR | APPROVED: RESIDENT ENGINEER | DATE:

USKH — A quarter century of design for Alaskans

ALASKA DISTRICT
CORPS OF ENGINEERS
ANCHORAGE, ALASKA

DESIGNED: SVB
DRAWN: LDS
TRACED:
CHECKED: SVB
SUBMITTED:
DI. SECT.

BEN EIELSON JR./SR. HIGH SCHOOL – PHASE 3
EIELSON AIR FORCE BASE, ALASKA
MECHANICAL
VENTILATION
FLOOR PLAN – DEMOLITION

RECOMMENDED: CHIEF, MILITARY TECHNICAL ENGINEERING BRANCH | APPROVED: CHIEF ENGINEERING DIVISION | DATE:

SCALE: AS SHOWN | SPEC. NO.

DRAWING NUMBER 29-02-38

SHEET OF

REFERENCE NO. M2.2

CORPS OF ENGINEERS

U. S. ARMY

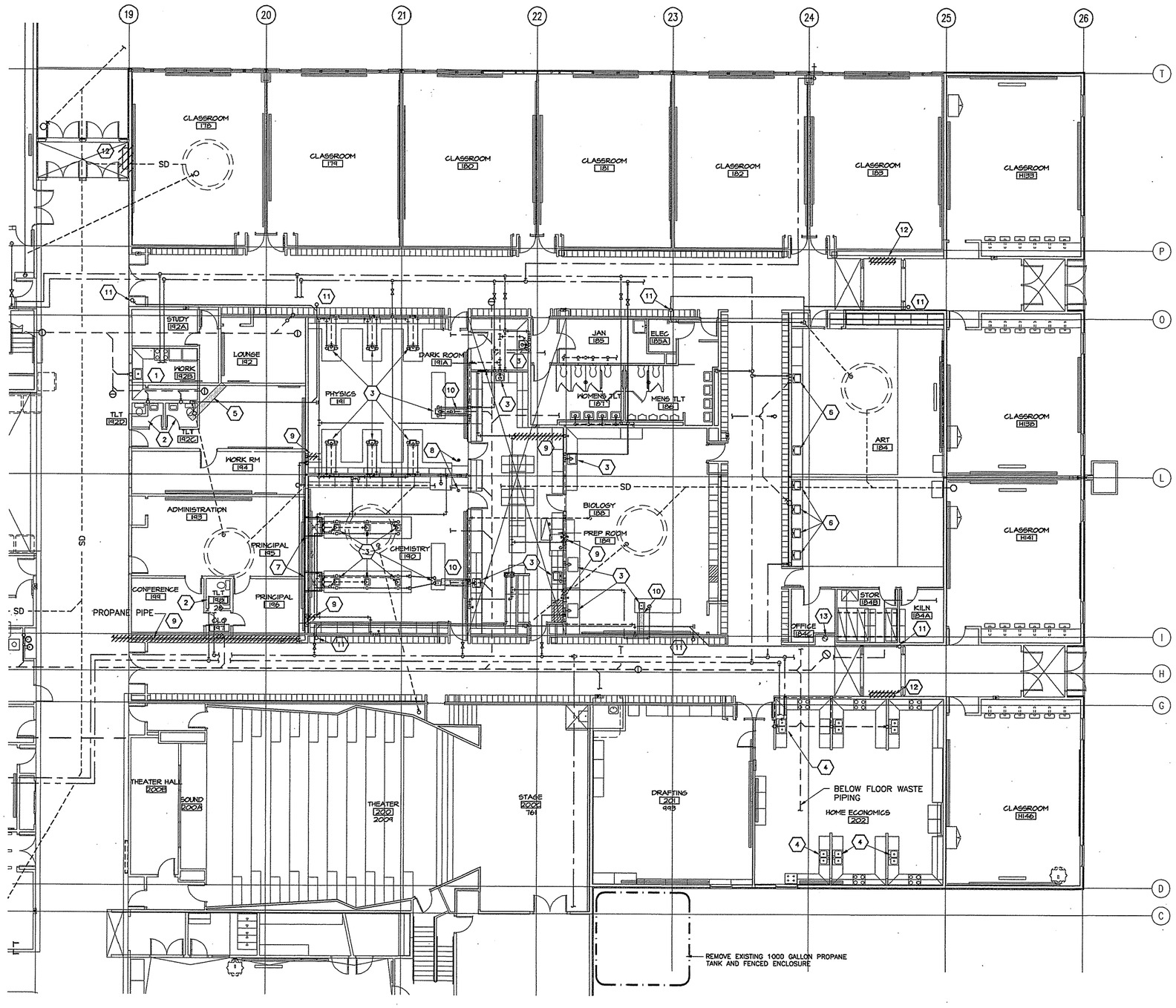

1 M2.1 M2.1 **AREA 'E' FLOOR PLAN- PIPING DEMOLITION**

SCALE: 1/8"=1'-0"

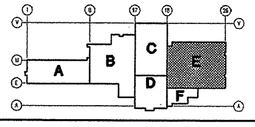

SHEET NOTES

1. REMOVE EXISTING SINK (AS ACM) AND ASSOCIATED PIPING. CAP CW, HW AND VENT AT MAINS; CAP WASTE BELOW FLOOR OR AT MAINS. SEE M5.1 FOR NEW WORK THIS AREA. SEE AB-1.
2. REMOVE EXISTING TOILET ROOM FIXTURES AND ASSOCIATED PIPING. CAP CW, HW AND VENT AT MAINS; CAP WASTE BELOW FLOOR OR AT MAINS. SEE M5.1 FOR NEW WORK THIS AREA.
3. REMOVE ALL LABORATORY SINKS (AS ACM), TURRETS, GAS COCKS AND WATER SERVICE FIXTURES AT ALL LABORATORY CASEWORK IN ROOMS 188, 189, 190, 191 AND 191A. SEE AB-1.
4. REMOVE EXISTING SINK (AS ACM), GARBAGE DISPOSAL AND ASSOCIATED PIPING. CAP CW, HW AND VENT AT MAINS. CAP WASTE BELOW FLOOR. SEE AB-1.
5. APPROXIMATE AREA OF EXISTING FLOOR SLAB TO BE SAWCUT AND REMOVED FOR NEW PLUMBING PIPING. CAP UNUSED PIPING TO BE ABANDONED BELOW SLAB. SEE M5.1 FOR NEW WORK.
6. REMOVE EXISTING SINK (AS ACM) AND FAUCET. SEE 1/M5.1 FOR NEW WORK THIS AREA, SEE AB-1.
7. REMOVE EXISTING LABORATORY PIPING IN SHAFTS AT ENDS OF CASEWORK. SEE M5.1 FOR NEW WORK.
8. REMOVE EXISTING EMERGENCY EYEWASH AND ASSOCIATED PIPING. SEE M5.1 FOR NEW WORK.
9. REMOVE PROPANE PIPING AND ACCESSORIES WHERE HATCHED. SEE M5.1 FOR NEW WORK.
10. APPROXIMATE AREA OF EXISTING FLOOR TO BE SAWCUT AND REMOVED FOR NEW PIPING TO LABORATORY ISLAND. SEE M5.1 FOR NEW WORK. VERIFY LOCATION OF EXISTING UNDERSLAB PIPING.
11. REMOVE EXISTING ROOF DRAIN.
12. REMOVE EXISTING CABINET UNIT HEATER, ASSOCIATED PIPING AND APPURTENANCES TO MAIN. CAP GHS/GHR PIPING.
13. REMOVE EXISTING DRINKING FOUNTAIN. SEE 1/M5.1 FOR NEW WORK.

REV.	DATE	C.O.	ACTION	DESCRIPTION	BY	APP'D.

CONTRACT NO.

CONTRACTOR

CITY STATE

RECOMMENDED: PRIME CONTRACTOR

APPROVED: RESIDENT ENGINEER

DATE:

USKH — A quarter century of design for Alaskans

ALASKA DISTRICT
CORPS OF ENGINEERS
ANCHORAGE, ALASKA

DESIGNED: SVB
DRAWN: LDS
TRACED:
CHECKED: SVB
SUBMITTED:
DIL REC'T.

BEN EIELSON JR./SR. HIGH SCHOOL – PHASE 3
EIELSON AIR FORCE BASE, ALASKA
MECHANICAL
DEMOLITION
FLOOR PLANS – PLUMBING

RECOMMENDED: CHIEF, MILITARY TECHNICAL ENGINEERING BRANCH

APPROVED: CHIEF ENGINEERING DIVISION

DATE:

SCALE: AS SHOWN

SPEC. NO.

DRAWING NUMBER 29-02-38

SHEET OF

REFERENCE NO. M2.1

507202M21(1=1)

LIST OF ABBREVIATIONS

@	AT	CLG	CEILING	ELEC	ELECTRIC, ELECTRICAL	HW	HOT WATER	OBVD	OPPOSED BLADE VOLUME DAMPER	SD	SLOT DIFFUSER/GRILLE
AAV	AUTOMATIC AIR VENT	CLR	CLEAR, CLEARANCE	EST	ESTIMATE	HWC	HOT WATER CIRCULATION	OC	ON CENTER	SF	SQUARE FOOT
ABS	BUTYL STYRENE PIPE	CMP	CORRUGATED METAL PIPE	EXIST	EXISTING	HWR	HEATING WATER RETURN	OD	OUTSIDE DIAMETER	SF	SUPPLY FAN
ABV	ABOVE	CMU	CONCRETE MASONRY UNIT	°F	DEGREES FAHRENHEIT	HWS	HEATING WATER SUPPLY	OFD	OVERFLOW DRAIN	SPEC	SPECIFICATION
ACU	AIR CONDITIONING UNIT	CO	CLEANOUT	FCO	FLOOR CLEAN OUT	ID	INSIDE DIMENSION	OH	OVERHEAD	SQ	SQUARE
AFF	ABOVE FINISHED FLOOR	COMB	COMBINATION	FD	FIRE DAMPER	IE	INVERT ELEVATION	OPP	OPPOSED	SS	STAINLESS STEEL
AHU	AIR HANDLING UNIT	CONC	CONCRETE	FD	FLOOR DRAIN	IN	INCH	P	PLUMBING FIXTURE	STA	STATION
ALT	ALTERNATE	CONN	CONNECTION	FH	FIRE HYDRANT	INCL	INCLUDE, INCLUDING	PCF	POUNDS PER CUBIC FOOT	STD	STANDARD
APPROX	APPROXIMATE	COORD	COORDINATE	FIN	FINISHED	INV	INVERT	PH	PHASE	STO	STORAGE
ARCH	ARCHITECT, ARCHITECTURAL	CP	CONCRETE PIPE	FLR	FLOOR	L	LENGTH	PI	POINT OF INTERSECTION	T	THERMOSTAT
ASPH	ASPHALT	CR	CONDENSATE RETURN	FLEX	FLEXIBLE	LAB	LABORATORY	PNEU	PNEUMATIC	T	TEMPERATURE SENSOR
ASSY	ASSEMBLY	CUH	CABINET UNIT HEATER	FM	FACTORY MUTUAL	LAV	LAVATORY	PP	POWER POLE	THK	THICK
AUTO	AUTOMATIC	CW	COLD WATER	FND	FOUNDATION	LB/HR	POUNDS PER HOUR	PRV	PRESSURE RELIEF VALVE	TP	TELEPHONE POLE
BAL	BALANCING	CWC	COLD WATER CIRCULATION	FPM	FEET PER MINUTE	LF	LINEAR FEET	PRV	PRESSURE REDUCING VALVE	TYP	TYPICAL
BB	BASEBOARD RADIATION	CY	CUBIC YARD	FT	FOOT	MA	MAKEUP AIR	PSI	POUNDS PER SQUARE INCH (GAUGE)	UH	UNIT HEATER
BDD	BACKDRAFT DAMPER	DBL	DOUBLE	GA	GAUGE	MAX	MAXIMUM	PSIA	POUNDS PER SQUARE INCH (ABSOLUTE)	UL	UNDERWRITERS LABORATORY
BLDG	BUILDING	DEMO	DEMOLISH, DEMOLITION	GAL	GALLON	MBH	ONE THOUSAND BTU PER HOUR	PVC	POLYVINYL CHLORIDE PIPE	USGS	UNITED STATES GEOLOGICAL SURVEY
BLW	BELOW	DEPT	DEPARTMENT	GALV	GALVANIZED	MD	MOTORIZED DAMPER	PVMT	PAVEMENT	V	SANITARY VENT
BM	BENCH MARK	DF	DRINKING FOUNTAIN	GCO	GRADE CLEANOUT	MECH	MECHANICAL	R	RADIUS	V	VOLT
BTM	BOTTOM	DHW	DOMESTIC HOT WATER	GHR	GLYCOL HEATING RETURN	MFR	MANUFACTURER	R/A	RETURN AIR	VAV	VARIABLE AIR VOLUME
BTUH	BRITISH THERMAL UNITS PER HOUR	DIA	DIAMETER	GHS	GLYCOL HEATING SUPPLY	MH	MANHOLE	RD	ROOF DRAIN	VD	VOLUME DAMPER
BVAV	BYPASS VARIABLE AIR VOLUME	DIP	DUCTILE IRON PIPE	GI	GALVANIZED IRON	MIN	MINUTE	REF	REFERENCE, REFER TO	VERT	VERTICAL
C	CONDUIT	DIV	DIVISION	GLULLAM	GLUE LAMINATED	MISC	MISCELLANEOUS	REV	REVISION	VSD	VARIABLE SPEED DRIVE
C	COOLING (THERMOSTAT)	DN	DOWN	GPM	GALLONS PER MINUTE	MS	MOTOR STARTER	RF	RELIEF FAN	VTR	VENT THRU ROOF
C/A	COMBUSTION AIR	DWG	DRAWING	GWB	GYPSUM WALL BOARD	MTD	MOUNTED	RM	ROOM	W	WASTE
CB	CATCH BASIN	E	EAST	H	HEATING (THERMOSTAT)	N/A	NOT APPLICABLE	RPM	REVOLUTIONS PER MINUTE	W/	WITH
CF	CUBIC FEET	E	ELECTRIC LINE OR CONDUIT	HB	HOSE BIB	NC	NORMALLY CLOSED	S	SANITARY SEWER	WC	WATER CLOSET
CFM	CUBIC FEET PER MINUTE	E	EXISTING	HORIZ	HORIZONTAL	NIC	NOT IN CONTRACT	S/A	SUPPLY AIR	WCO	WALL CLEANOUT
CI	CAST IRON	EA	EACH	HP	HORSE POWER	NO	NORMALLY OPEN	SCH	SCHEDULE	W/O	WITHOUT
℄	CENTERLINE	E/A	EXHAUST AIR	HR	HOUR	NTS	NOT TO SCALE	SD	STORM DRAIN	WSP	WOOD STAVE PIPE
CIRC	CIRCULATING	EF	EXHAUST FAN	HTG	HEATING	O/A	OUTSIDE AIR	SEC	SECTION, SECOND	WWF	WOVEN WIRE FABRIC
		EL	ELEVATION	HVAC	HEATING/VENTILATING AIR CONDITIONING						

MECHANICAL LEGEND

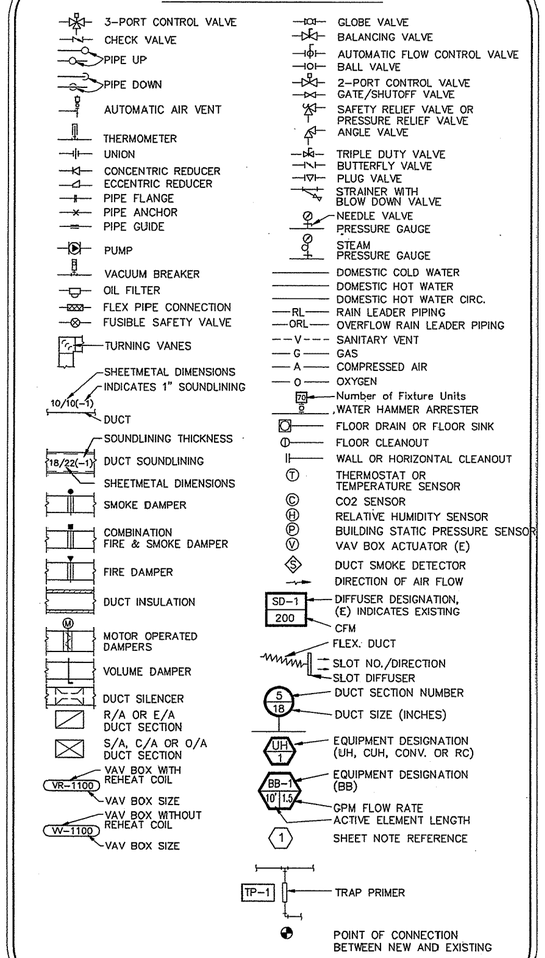

ALL SYMBOLS DO NOT NECESSARILY APPEAR ON DRAWINGS

REV.	DATE	C.O.	ACTION	DESCRIPTION	BY	APP'D.

CONTRACT NO.

CONTRACTOR

CITY STATE

RECOMMENDED: (PRIME CONTRACTOR) APPROVED: (RESIDENT ENGINEER) DATE:

USKH — A quarter century of design for Alaskans

ALASKA DISTRICT
CORPS OF ENGINEERS
ANCHORAGE, ALASKA

DESIGNED: SVB
DRAWN: LDS
TRACED:
CHECKED: SVB
SUBMITTED:
CH. SECT.

BEN EIELSON JR./SR. HIGH SCHOOL – PHASE 3
EIELSON AIR FORCE BASE, ALASKA
MECHANICAL
LEGEND AND ABBREVIATIONS

RECOMMENDED: (CHIEF, MILITARY TECHNICAL ENGINEERING BRANCH) APPROVED: (CHIEF ENGINEERING DIVISION) DATE:

SCALE: NONE SPEC. NO.

DRAWING NUMBER 29-02-38

SHEET OF

REFERENCE NO. M1.0

507202M10 (1=1)