CORPS OF ENGINEERS

U. S. ARMY

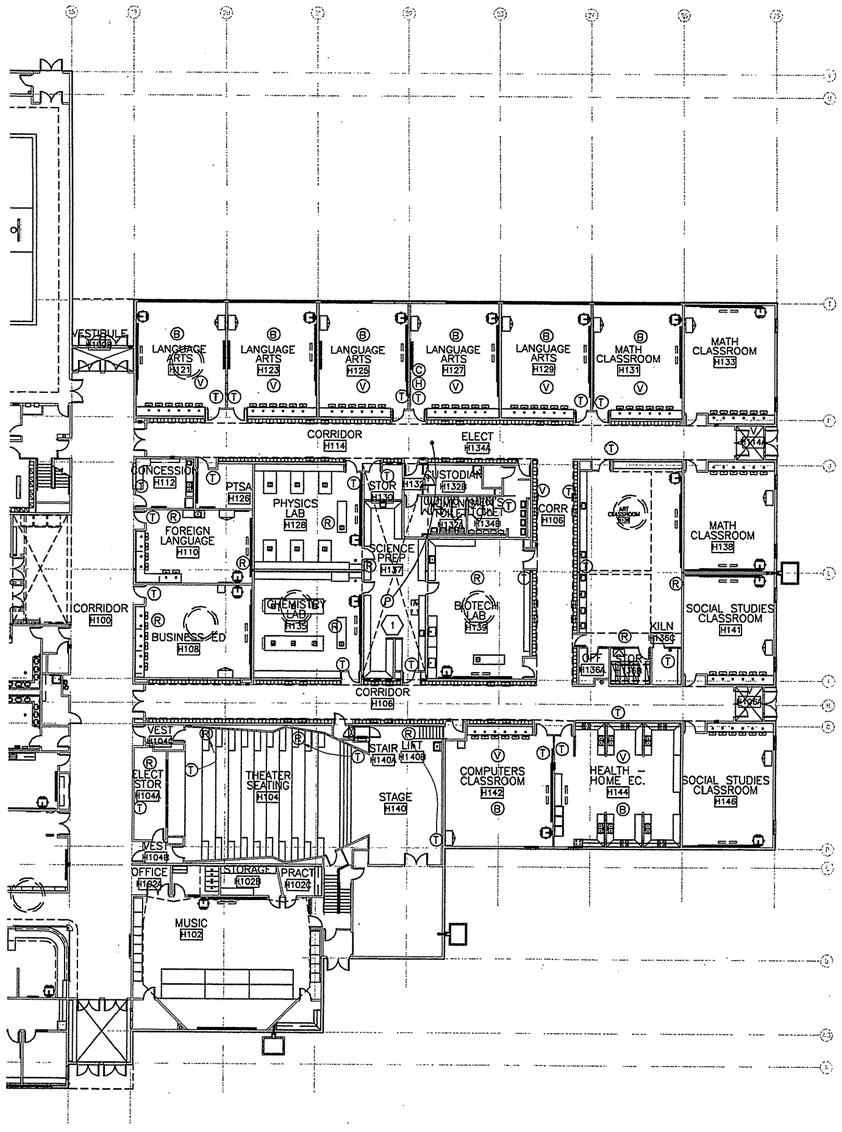

CONTROLS LEGEND	
T	THERMAL SENSOR
V	VAV BOX ACTUATOR
C	CO2 SENSOR
H	RELATIVE HUMIDITY SENSOR
B	HEATING CONTROL VALVE
R	VAV BOX WITH REHEAT COIL
P	STATIC PRESSURE SENSOR

SHEET NOTES	
1	LOCATE IN DDC PANEL IN MECHANICAL ROOM ABOVE.

N

1 CONTROLS PLAN
M8.1 M8.1 SCALE: 1/16"=1'-0"

REV.	DATE	C.O.	ACTION	DESCRIPTION	BY	APP'D.

CONTRACT NO.
CONTRACTOR
CITY STATE
RECOMMENDED: PRIME CONTRACTOR
APPROVED: RESIDENT ENGINEER
DATE:

USKH A quarter century of design for Alaskans

ALASKA DISTRICT
CORPS OF ENGINEERS
ANCHORAGE, ALASKA

DESIGNED: SVB
DRAWN: LDS/EFH
TRACED:
CHECKED: SVB
SUBMITTED:
CH. SECT.

BEN EIELSON JR./SR. HIGH SCHOOL - PHASE 3
EIELSON AIR FORCE BASE, ALASKA
MECHANICAL
CONTROLS PLAN

RECOMMENDED: CHIEF, MILITARY TECHNICAL ENGINEERING BRANCH
APPROVED: CHIEF ENGINEERING DIVISION
DATE:
SCALE: AS SHOWN
SPEC. NO.
DRAWING NUMBER 29-02-38
SHEET OF

REFERENCE NO. M8.1

5072020441(1=1)

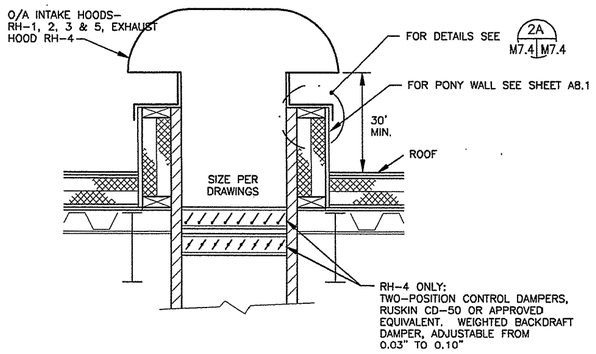

1 M7.2 M7.2 **ROOF HOOD INSTALLATION DETAIL**
SCALE: NONE

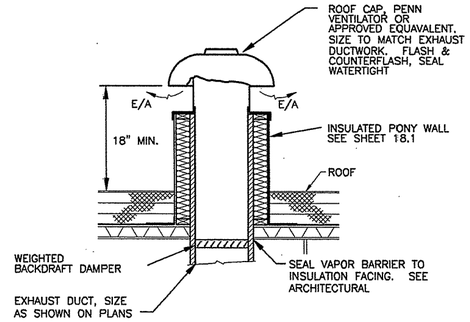

2 M7.2 M7.2 **TYPICAL EXHAUST FAN ROOF PENETRATION**
SCALE: NONE

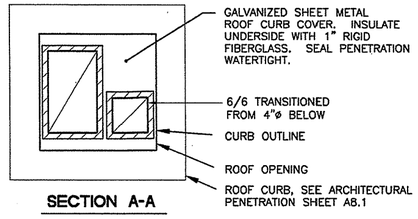

SECTION A-A

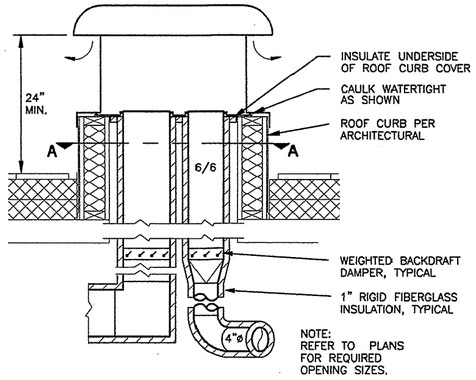

3 M7.2 M7.2 **ROOF PENETRATION DETAIL**
MULTIPLE EXHAUSTS SHOWN
SCALE: NONE

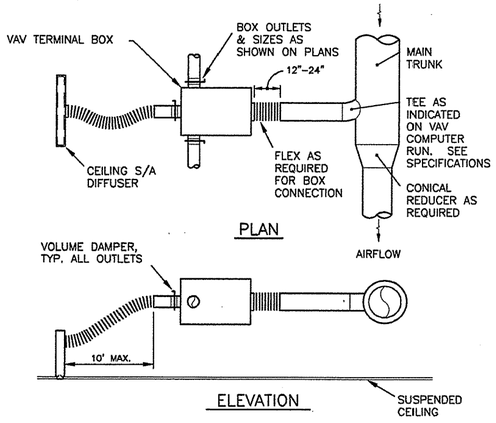

5 M7.2 M7.2 **VAVBOX/DIFFUSER DETAIL**
SCALE: NONE

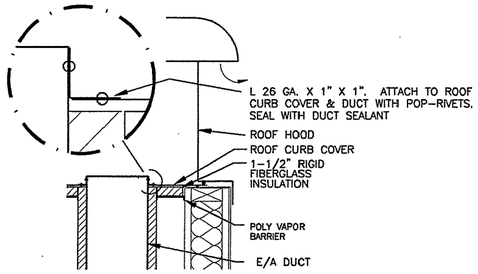

2A M7.4 M7.4 **ROOF CURB COVER INSULATION DETAIL**
SCALE: NONE

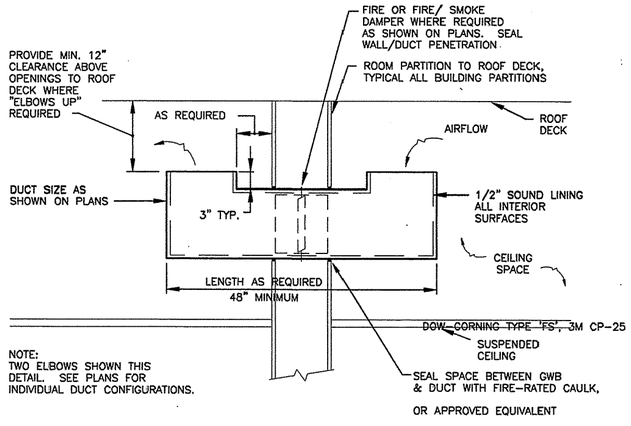

6 M7.2 M7.2 **TRANSFER DUCT DETAIL**
SCALE: NONE

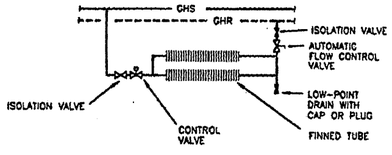

7 M7.2 M7.2 **BASEBOARD PIPING SCHEMATIC**
SCALE: NONE

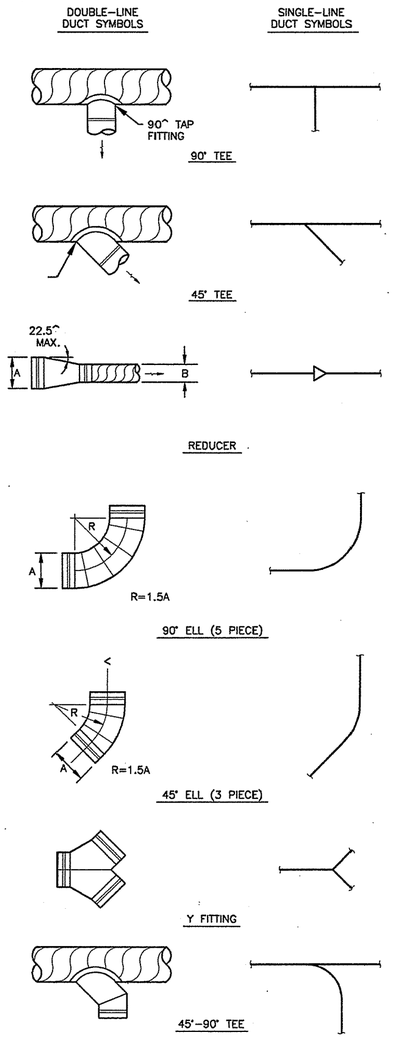

4 M7.2 M7.2 **ROUND DUCT CONSTRUCTION DETAILS**
SCALE: NONE

REV.	DATE	C.O.	ACTION	DESCRIPTION	BY	APP'D.

CONTRACT NO. _____
CONTRACTOR _____
CITY _____ STATE _____
RECOMMENDED: (PRIME CONTRACTOR) APPROVED: (RESIDENT ENGINEER) DATE:

USKH — A quarter century of design for Alaskans
ALASKA DISTRICT
CORPS OF ENGINEERS
ANCHORAGE, ALASKA

DESIGNED: SVB
DRAWN: LDS/EFH
TRACED:
CHECKED: SVB
SUBMITTED:
CK. SEC.

BEN EIELSON JR./SR. HIGH SCHOOL - PHASE 3
EIELSON AIR FORCE BASE, ALASKA
MECHANICAL
TYPICAL DETAILS

RECOMMENDED: (CHIEF, MILITARY TECHNICAL ENGINEERING BRANCH) APPROVED: (CHIEF ENGINEERING DIVISION) DATE:
SCALE: AS SHOWN SPEC. NO.
DRAWING NUMBER 29-02-38
SHEET OF

REFERENCE NO. M7.2

507202M72 (1=1)

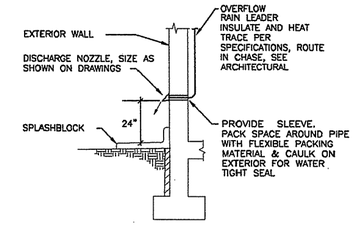

1 ORL DISCHARGE NOZZLE DETAIL
M7.1 | M5.1 SCALE: NONE

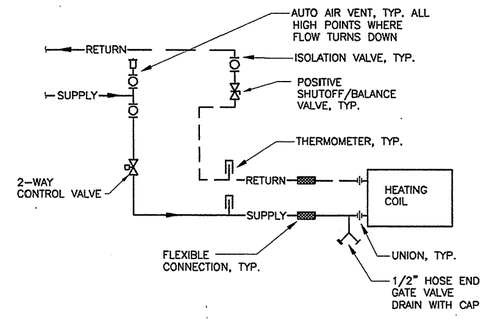

5 HEATING COIL PIPING SCHEMATIC
M7.1 | M7.1 SCALE: NONE

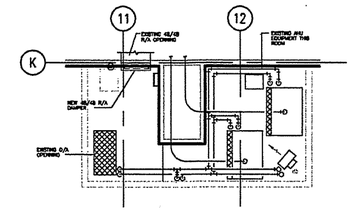

9 FAN ROOM B201 - PLAN
M7.1 | M7.1 SCALE: NONE

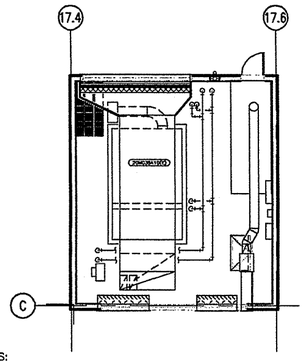

NOTES:

1. 20MC3SA10(E): CHANGE PACE AIR HANDLER UNIT FAN WHEEL AND DRIVE SET FOR CLASS TWO FAN WHEEL CONSTRUCTION AND FAN RPM OF 1213.
2. CONTRACTOR TO CONFIRM THAT FAN WHEEL IS CLASS TWO FROM NAMEPLATE AND CONFIRM THAT EXISTING VFD IS RATED FOR 1213 RPM.
3. REBALANCE 20MC3SA10(E) SYSTEM BASED ON AIR FLOWS FROM PREVIOUS PROJECTS DRAWINGS.
4. REMOVE VORTEX DAMPERS FROM 20MC3SA10(E) FAN.

10 FAN ROOM D136 - PLAN
M7.1 | M7.1 SCALE: NONE

SEE ARCHITECTURAL FOR ROOF DRAIN DETAILS

2 RD AND ORD DETAIL
M7.1 | M7.1 SCALE: NONE

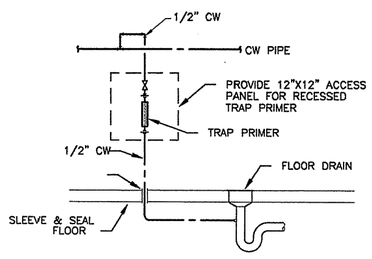

3 TRAP PRIMER DETAIL
M7.1 | M7.1 SCALE: NONE

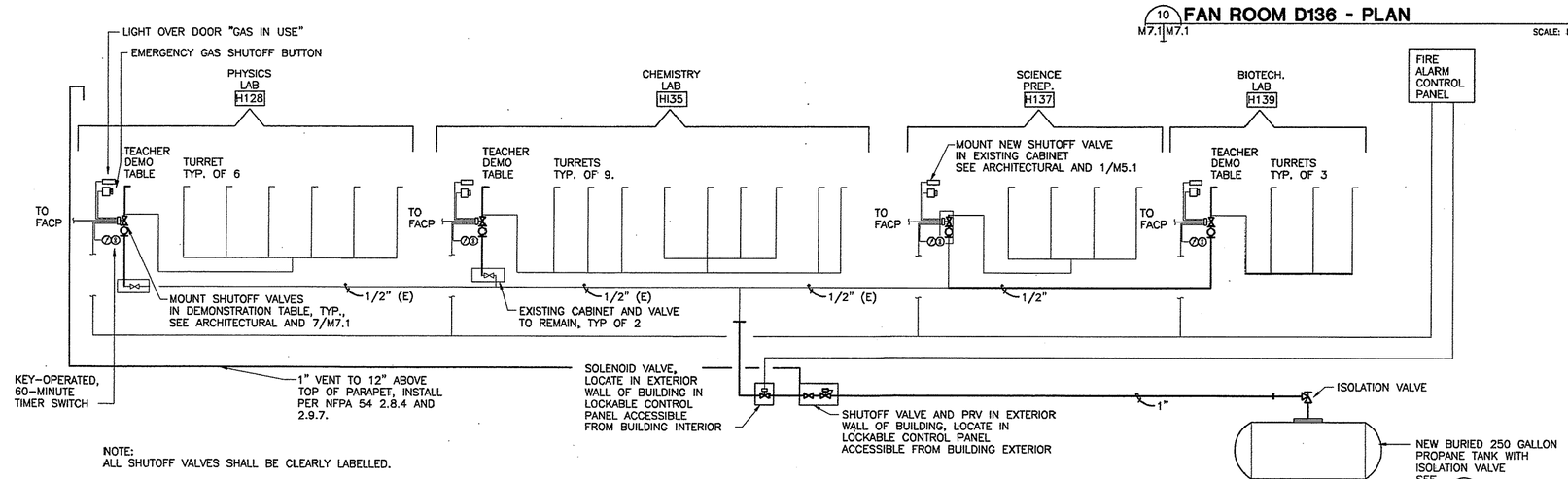

NOTE:
ALL SHUTOFF VALVES SHALL BE CLEARLY LABELLED.

6 PROPANE GAS PIPING SCHEMATIC
M7.1 | M7.1 SCALE: NONE

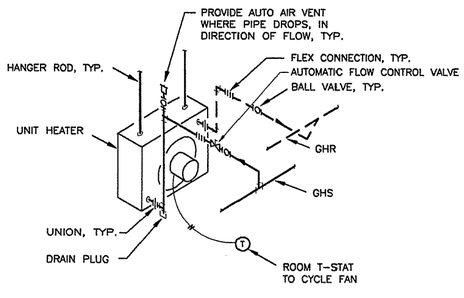

4 UNIT HEATER PIPING SCHEMATIC
M7.1 | M7.1 SCALE: NONE

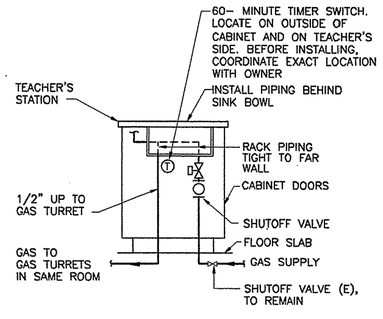

7 PROPANE GAS PIPING SECTION
M7.1 | M7.1 SCALE: NONE

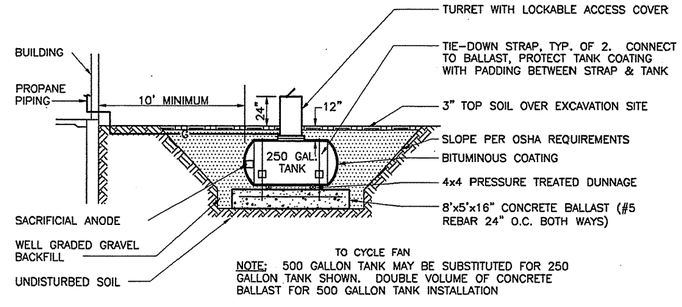

NOTE: 500 GALLON TANK MAY BE SUBSTITUTED FOR 250 GALLON TANK SHOWN. DOUBLE VOLUME OF CONCRETE BALLAST FOR 500 GALLON TANK INSTALLATION

8 PROPANE TANK INSTALLATION
M7.1 | M7.1 SCALE: NONE

REV.	DATE	C.O.	ACTION	DESCRIPTION	BY	APP'D.

CONTRACT NO.
CONTRACTOR
CITY STATE
RECOMMENDED: PRIME CONTRACTOR APPROVED: RESIDENT ENGINEER DATE:

USKH — A quarter century of design for Alaskans

ALASKA DISTRICT
CORPS OF ENGINEERS
ANCHORAGE, ALASKA

DESIGNED: SVB
DRAWN: LDS/EFH
TRACED:
CHECKED: SVB
SUBMITTED:
CH. SECT.

BEN EIELSON JR./SR. HIGH SCHOOL – PHASE 3
EIELSON AIR FORCE BASE, ALASKA
MECHANICAL
TYPICAL DETAILS & FAN ROOM PLANS

RECOMMENDED: CHIEF, MILITARY TECHNICAL ENGINEERING BRANCH
APPROVED: CHIEF ENGINEERING DIVISION DATE:
SCALE: AS SHOWN SPEC. NO.
DRAWING NUMBER 29-02-38
SHEET OF

REFERENCE NO. M7.1

507202M7(1=1)

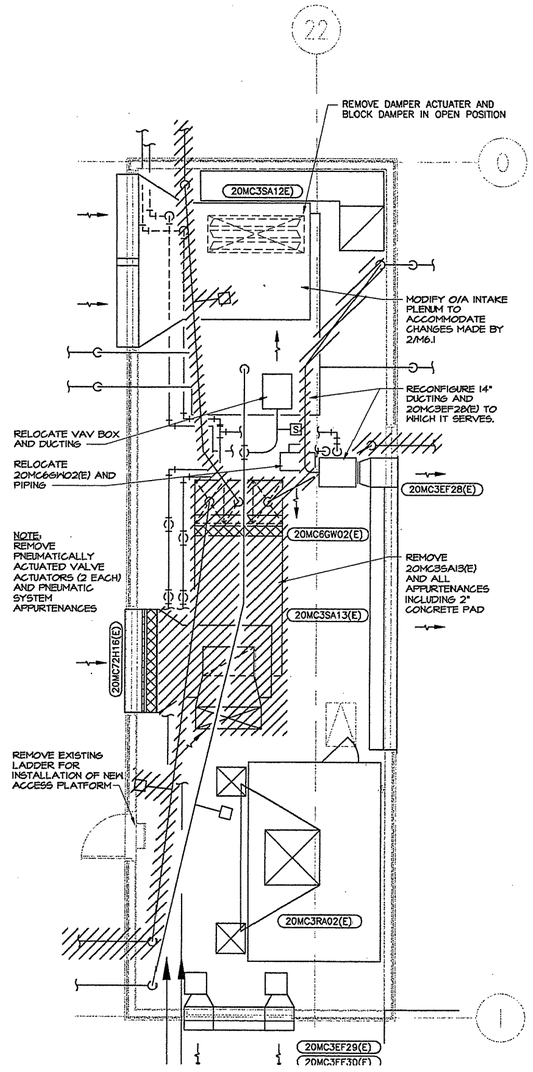

1 M6.1 M6.1 **FAN ROOM 201- DEMOLITION**

SCALE: 1/4"=1'-0"

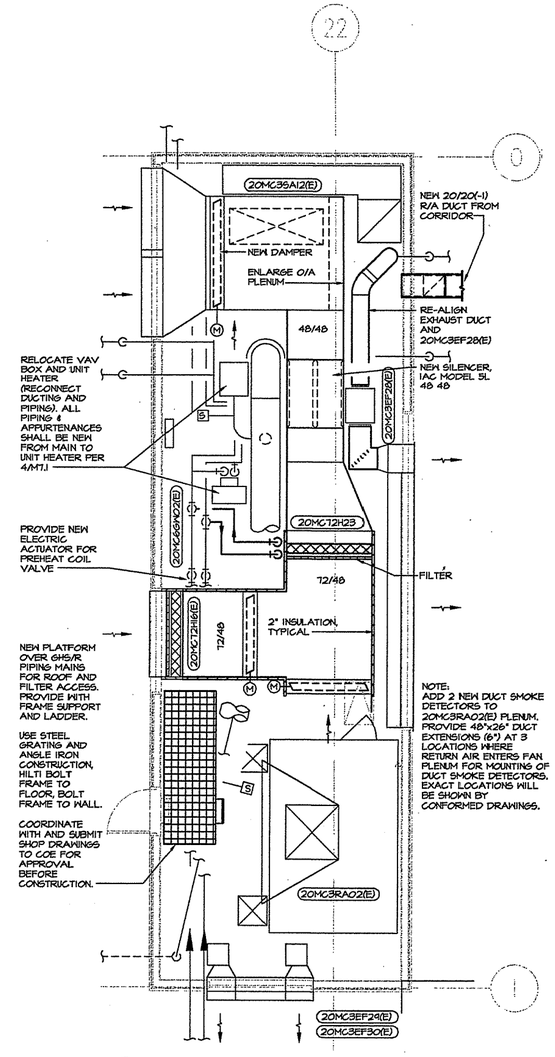

2 M6.1 M6.1 **FAN ROOM 201- NEW WORK**

SCALE: 1/4"=1'-0"

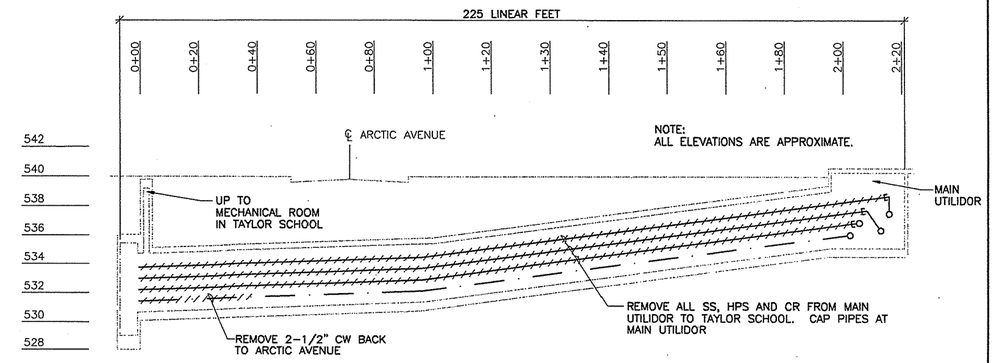

3 M6.1 M6.1 **TAYLOR SCHOOL UTILIDOR SECTION- DEMOLITION**

SCALE: 1" = 20' (HORIZ.)

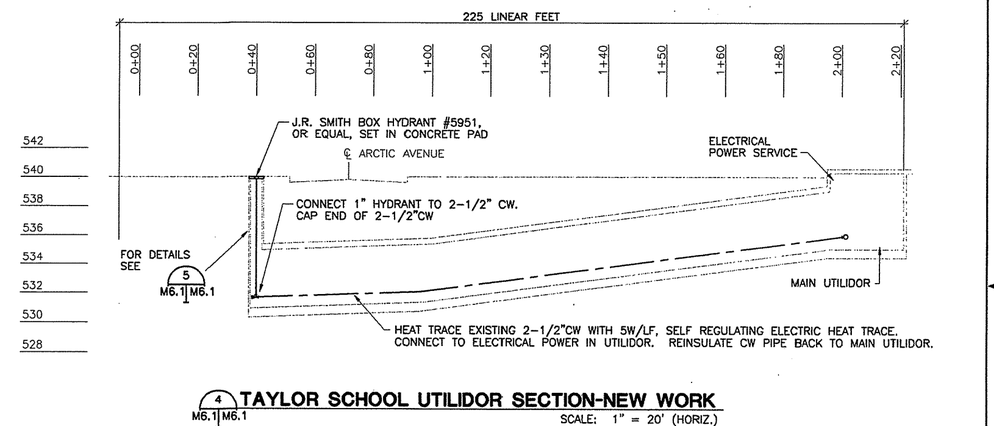

4 M6.1 M6.1 **TAYLOR SCHOOL UTILIDOR SECTION-NEW WORK**

SCALE: 1" = 20' (HORIZ.)

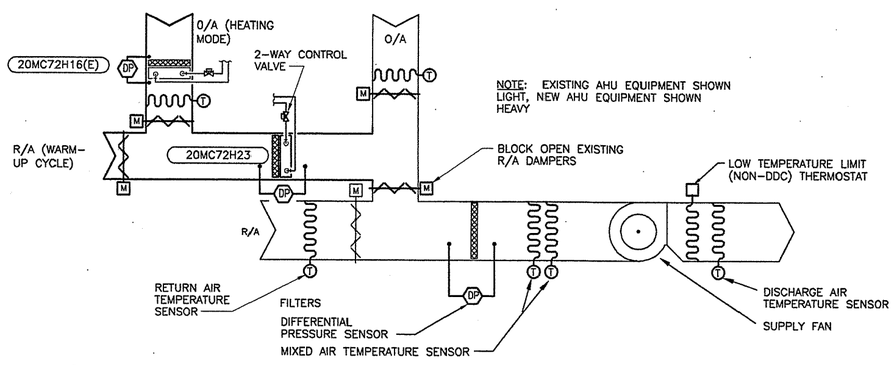

5 M6.1 M6.1 **20MC3SA12(E) CONTROLS SCHEMATIC**

SCALE: 1/4"=1'-0"

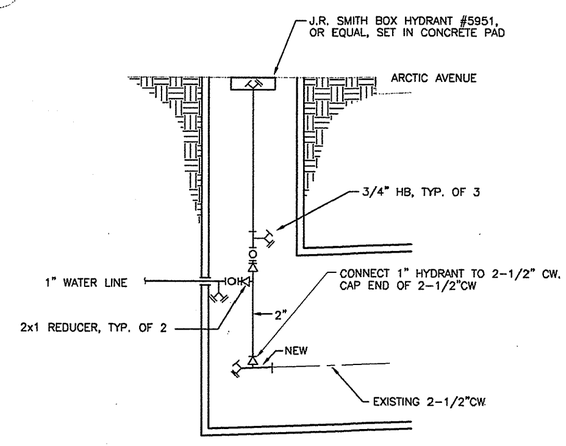

5 M6.1 M6.1 **IRRIGATION SYSTEM PIPING IN UTILIDOR DETAIL**

SCALE: NONE

REV.	DATE	C.O.	ACTION	DESCRIPTION	BY	APP'D.

CONTRACTOR CONTRACT NO.

CITY STATE

RECOMMENDED: PRIME CONTRACTOR | APPROVED: RESIDENT ENGINEER | DATE:

USKH — A quarter century of design for Alaskans

ALASKA DISTRICT CORPS OF ENGINEERS ANCHORAGE, ALASKA

DESIGNED: SVB
DRAWN: LDS/EFH
TRACED:
CHECKED: SVB
SUBMITTED:
CH. SECT.

BEN EIELSON JR./SR. HIGH SCHOOL – PHASE 3
EIELSON AIR FORCE BASE, ALASKA
MECHANICAL
FAN ROOM 201 PLANS AND UTILIDOR PIPING CONNECTIONS

RECOMMENDED: CHIEF, MILITARY TECHNICAL ENGINEERING BRANCH | APPROVED: CHIEF ENGINEERING DIVISION | DATE:

SCALE: AS SHOWN | SPEC. NO.

DRAWING NUMBER 29-02-38

SHEET OF

REFERENCE NO. M6.1

507202M62 (1=1)

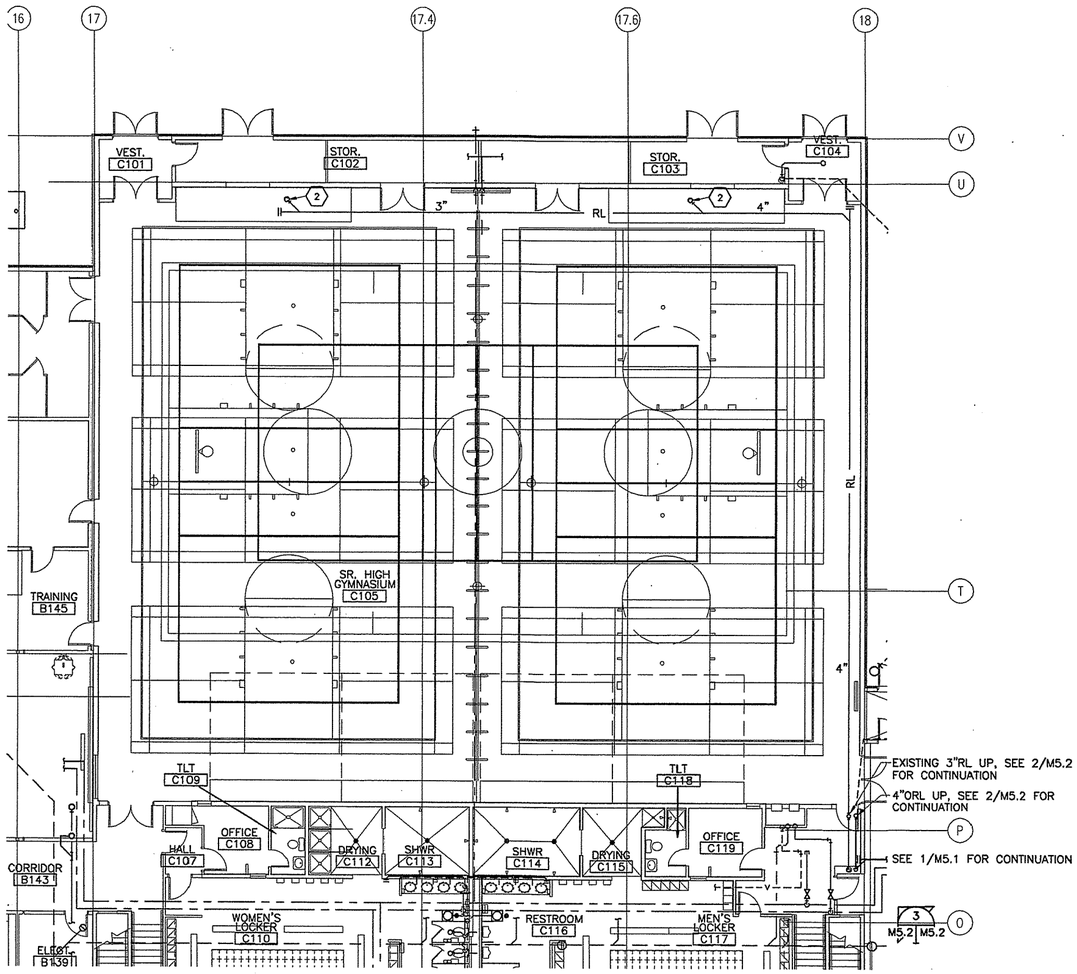

1 M5.2 M5.2 **GYMNASIUM RAIN LEADER PLAN**

SCALE: 1/8"=1'-0"

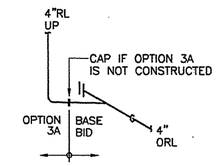

3 M5.2 M5.2 **ORL PIPING ISOMETRIC**

SCALE: NONE

SHEET NOTES
(1) NEW 4" ORL UP TO ORD-1. HEAT TRACE AND INSULATE.
(2) EXTEND EXISTING RL UP TO NEW 4" RD-1. PROVIDE REDUCERS AS REQUIRED. HEAT TRACE AND REINSULATE.
(3) REFERENCE DRAWING 1/A4.2. REPLACE EXISTING FLOOR SINK WITH NEW FLOOR SINK IN JANITOR'S ROOM NEAR GRID 18/H. NEW FLOOR SINK IS FURNISHED BY SCHOOL DISTRICT, INSTALLED BY CONTRACTOR. COORDINATE WITH COE TO OBTAIN FLOOR SINK.

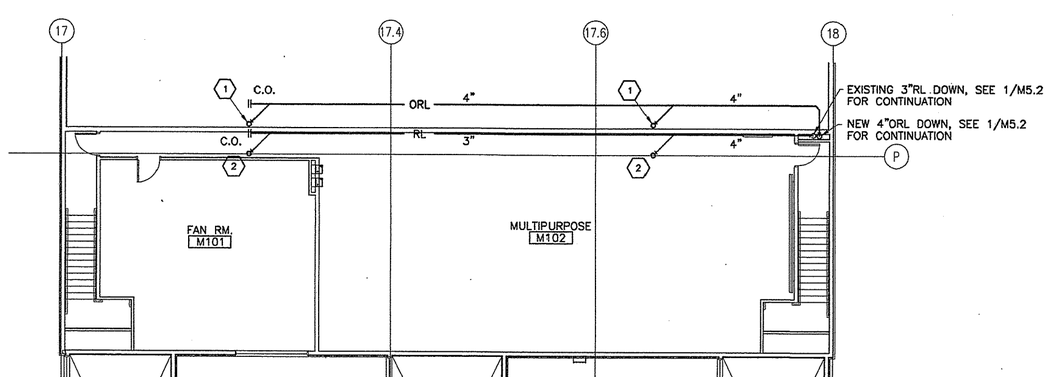

2 M5.2 M5.2 **MEZZANINE RAIN LEADER PLAN**

SCALE: 1/8"=1'-0"

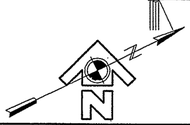

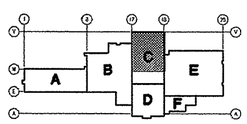

REV.	DATE	C.O.	ACTION	DESCRIPTION	BY	APP'D.

CONTRACT NO.

CONTRACTOR

CITY STATE

RECOMMENDED: PRIME CONTRACTOR

APPROVED: RESIDENT ENGINEER

DATE:

USKH — A quarter century of design for Alaskans

ALASKA DISTRICT
CORPS OF ENGINEERS
ANCHORAGE, ALASKA

DESIGNED: SVB
DRAWN: LDS
TRACED:
CHECKED: SVB
SUBMITTED:
CH. SECT.

BEN EIELSON JR./SR. HIGH SCHOOL – PHASE 3
EIELSON AIR FORCE BASE, ALASKA
MECHANICAL
PLUMBING PLANS AND DETAILS

RECOMMENDED: CHIEF, MILITARY TECHNICAL ENGINEERING BRANCH

APPROVED: CHIEF ENGINEERING DIVISION

DATE:

SCALE: AS SHOWN

SPEC. NO.

DRAWING NUMBER 29-02-38

SHEET OF

507202M52 (1=1)

REFERENCE NO. M5.2

CORPS OF ENGINEERS

U. S. ARMY

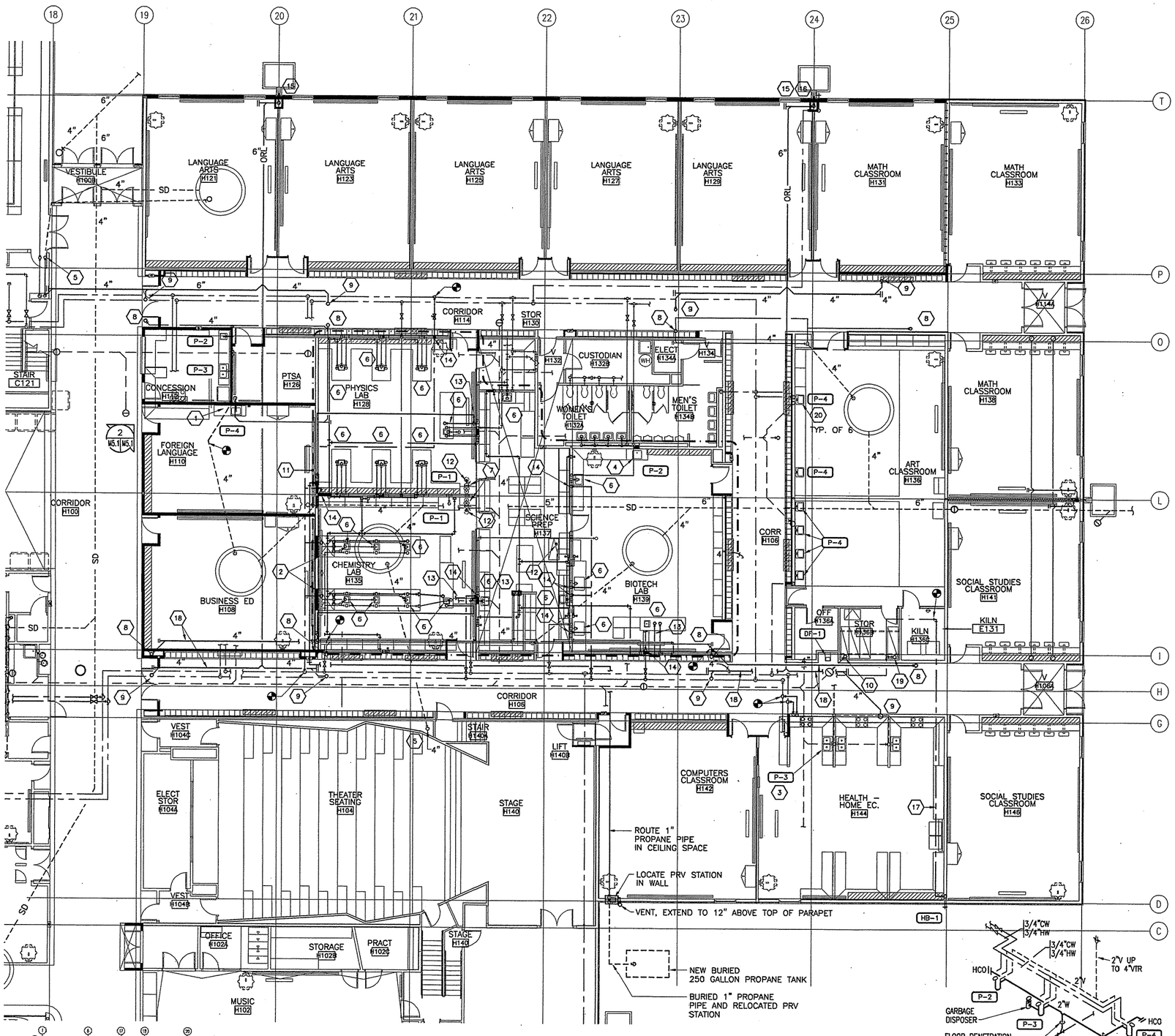

1 AREA 'E' FLOOR PLAN- PLUMBING
M5.1 M5.1
SCALE: 1/8"=1'-0"

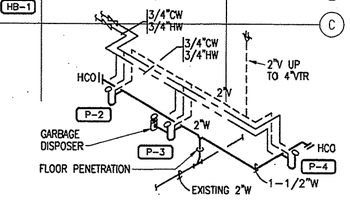

2 PLUMBING ISOMETRIC ROOMS E112 AND E114
M5.1 M5.1
SCALE: NONE

GENERAL NOTES

1. CONTRACTOR TO FIELD VERIFY ALL SIZES OF EXISTING PIPING.
2. PROVIDE WATER HAMMER ARRESTERS ON ALL NEW PLUMBING. SIZE AND LOCATE ARRESTORS PER MANUFACTURER'S RECOMMENDATIONS.
3. NOT ALL EXISTING PIPING IS SHOWN TO PLUMBING FIXTURES THAT ARE TO REMAIN.
4. NEW WORK IS SHOWN WITH HEAVY LINES.
5. UNLESS OTHERWISE NOTED ROUTE WATER PIPING IN CEILING SPACE.
6. UNLESS OTHERWISE NOTED ROUTE RAIN LEADER AND OVERFLOW RAIN LEADER PIPING AT 1/8" PER FT.

SHEET NOTES

1. REROUTE EXISTING UNDERSLAB RAIN LEADER PIPING AS REQUIRED TO ACCOMMODATE NEW WALL CONFIGURATIONS. ROUTE VERTICAL PIPING IN WALL.
2. INSTALL LABORATORY PIPING IN NEW SHAFTS AND TRENCH. CONNECT TO EXISTING PIPING.
3. INSTALL NEW SINK AND GARBAGE DISPOSER AT THIS LOCATION. UPSIZE EXISTING 1/2" HW AND CW SUPPLY PIPING TO 3/4" BACK TO MAINS. CONNECT NEW HW AND CW. CONNECT NEW 1-1/2"V AND 3" WASTE TO EXISTING.
4. CONNECT NEW HW, CW, WASTE AND VENT TO EXISTING PLUMBING PIPING IN WALL.
5. EXISTING 4"RL AND NEW 4"ORL UP. SEE 2/M5.2 FOR CONTINUATION. (OPTION 3A)
6. PROVIDE NEW LABORATORY SINKS, TURRETS, GAS COCKS AND WATER SERVICE FIXTURES AT LABORATORY CASEWORK IN ROOMS H128, H135, H137 AND H139. CONNECT TO GAS AND WATER PIPING. PROVIDE NEW HW FIXTURES AND 1/2"HW PIPING TO ALL LABORATORY STATIONS. SEE SECTION 12345 FOR PRODUCT SPECIFICATIONS.
7. INSTALL NEW EMERGENCY EYEWASH AND DRENCH SHOWERS AT THESE LOCATIONS. CONNECT TO EXISTING 1-1/4"CW.
8. EXTEND EXISTING RL TO NEW 4"RD-1. PROVIDE REDUCERS AS REQUIRED. INSULATE.
9. NEW 4"ORL UP TO 4" ORD-1. INSULATE.
10. CONNECT 2"WASTE TO EXISTING CLEANOUT PIPING. ROUTE UP TO FAN ROOM E202.
11. NEW PROPANE PIPING AND NEW SHUTOFF SYSTEMS THIS AREA, SEE 7/M7.1.
12. EXISTING FLOOR DRAIN, TYP.
13. 1/2"HW AND 1/2" PROPANE BELOW SLAB. SAWCUT EXISTING FLOOR AS REQUIRED. FOR EMERGENCY PROPANE SHUTOFF AND ALARM SEE 6 AND 7/M7.1.
14. ROUTE NEW 1/2"HW PIPING IN WALL & THROUGH CABINETS TO LABORATORY FIXTURES.
15. 6" ORL DOWN TO NEW SPLASHBLOCK. SEE DETAIL 1/M7.1.
16. REROUTE EXISTING HOSE BIBB PIPING AS REQUIRED TO ACCOMMODATE NEW RAIN LEADER PIPING.
17. NEW 3/4" CW TO HB-1. ROUTE IN CEILING SPACE.
18. ROUTE NEW RL AND ORL PIPING IN TRUSS SPACE (ABOVE GWB).
19. EXISTING 1/2"CW UP TO FAN ROOM.
20. CONNECT CW, HW, AND VENT TO NEW SINK AND FAUCETS. EXTEND PIPING AS REQUIRED. CONNECT NEW WASTE TO EXISTING SEDIMENT TRAP.

REV.	DATE	C.O.	ACTION	DESCRIPTION	BY	APP'D.

CONTRACT NO.
CONTRACTOR
CITY STATE
RECOMMENDED: PRIME CONTRACTOR
APPROVED: RESIDENT ENGINEER
DATE:

USKH — A quarter century of design for Alaskans

ALASKA DISTRICT
CORPS OF ENGINEERS
ANCHORAGE, ALASKA

DESIGNED: SVB
DRAWN: LDS
TRACED:
CHECKED: SVB
SUBMITTED:
CH. REPT.

BEN EIELSON JR./SR. HIGH SCHOOL - PHASE 3
EIELSON AIR FORCE BASE, ALASKA
MECHANICAL
PLUMBING
FLOOR PLANS

RECOMMENDED: CHIEF, MILITARY TECHNICAL ENGINEERING BRANCH
APPROVED: CHIEF ENGINEERING DIVISION
DATE:
SCALE: AS SHOWN
SPEC. NO.
DRAWING NUMBER 29-02-38
SHEET OF

REFERENCE NO. M5.1

507202M51 (1=1)

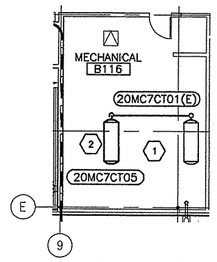

NOTE:

1. CONFIGURE EXPANSION TANKS ACCORDING TO JR. HIGH SCHOOL HEATING SYSTEM SCHEMATIC
2. INSTALL EXPANSION TANK AS HIGH AS POSSIBLE; HANG FROM ROOF STRUCTURE

1 PARTIAL AREA 'B' FLOOR PLAN

SCALE: 1/8"=1'-0"

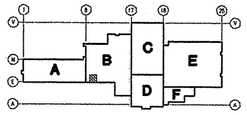

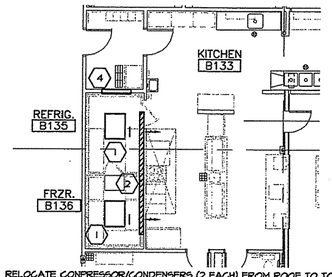

1. RELOCATE COMPRESSOR/CONDENSERS (2 EACH) FROM ROOF TO TOP OF FREEZER/REFRIGERATOR. PROVIDE RAIL SUPPORT ON FREEZER/REFRIGERATOR UNITS TO WHICH THEY SERVE ACCORDING TO MANUFACTURER'S RECOMMENDATIONS.
2. REMOVE GWB FROM BOTH SIDES OF WALL ABOVE CEILING, APPROXIMATELY 16' WIDE x 4' HIGH.
3. DIRECT RADIATOR COOLING FAN DISCHARGE TOWARDS OPENING IN GWB.
4. PROVIDE 36x36 ACCESS DOOR OR LARGER AS REQUIRED TO INSTALL COMPRESSOR/CONDENSER UNITS.

1 PARTIAL AREA 'B' FLOOR PLAN

SCALE: 1/8"=1'-0"

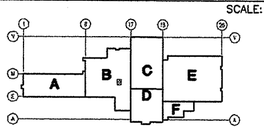

507202M41(1=1)

REV.	DATE	C.O.	ACTION	DESCRIPTION	BY	APP'D.

CONTRACTOR _____ CONTRACT NO. _____

CITY _____ STATE _____

RECOMMENDED: _____ PRIME CONTRACTOR | APPROVED: _____ RESIDENT ENGINEER | DATE: _____

USKH 25 YEARS — A quarter century of design for Alaskans

ALASKA DISTRICT
CORPS OF ENGINEERS
ANCHORAGE, ALASKA

DESIGNED: SVB
DRAWN: LDS
TRACED:
CHECKED: SVB
SUBMITTED:
CH. _____ REGT.

BEN EIELSON JR./SR. HIGH SCHOOL – PHASE 3
EIELSON AIR FORCE BASE, ALASKA
MECHANICAL
HEATING
FLOOR PLANS

RECOMMENDED: _____ CHIEF, MILITARY TECHNICAL ENGINEERING BRANCH | APPROVED: _____ CHIEF ENGINEERING DIVISION | DATE:

SCALE: AS SHOWN | SPEC. NO.

DRAWING NUMBER 29-02-38

SHEET _____ OF _____

REFERENCE NO. M4.1A

CORPS OF ENGINEERS

U. S. ARMY

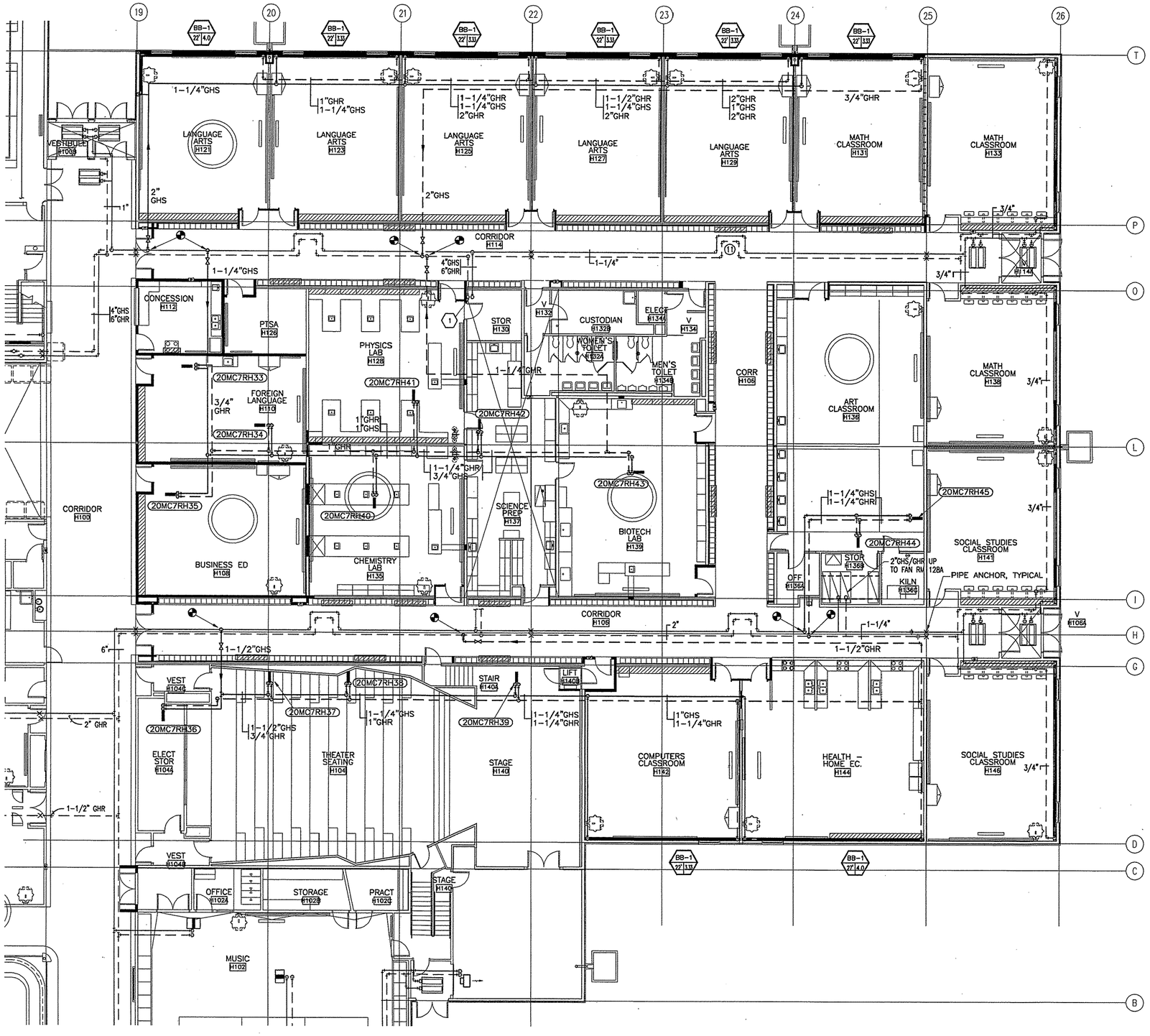

1 AREA 'E' FLOOR PLAN- HEATING
M4.1 M4.1
SCALE: 1/8"=1'-0"

SHEET NOTES
1 PROVIDE BB-1 BASEBOARD ENCLOSURE ONLY (APPROXIMATELY 26 LINEAR FEET) TO EXISTING FIN TUBE EXPOSED IN ISS A120A BY REMOVAL OF EXISTING COUNTER TOP, SEE ARCHITECTURAL DRAWING A4.1.

GENERAL NOTES
1. UNLESS OTHERWISE NOTED, RUNOUT PIPES TO TERMINAL HEATING EQUIPMENT ARE 3/4".

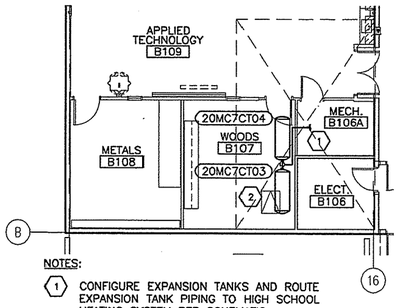

NOTES:

1. CONFIGURE EXPANSION TANKS AND ROUTE EXPANSION TANK PIPING TO HIGH SCHOOL HEATING SYSTEM PER SCHEMATIC
2. INSTALL EXPANSION TANKS AS HIGH AS POSSIBLE; HANG FROM ROOF STRUCTURE

1 PARTIAL AREA 'B' FLOOR PLAN
M4.1
SCALE: 1/8"=1'-0"

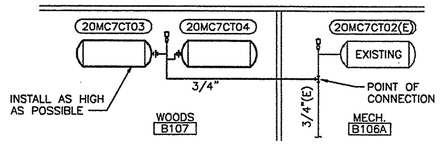

2 HIGH SCHOOL EXP. TANK SCHEMATIC
M4.1
SCALE: NONE

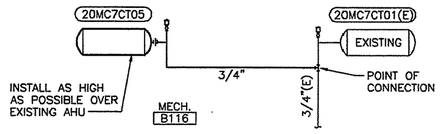

3 JR. HIGH SCHOOL EXP. TANK SCHEMATIC
M4.1
SCALE: NONE

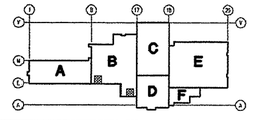

REV.	DATE	C.O.	ACTION	DESCRIPTION	BY	APP'D.

CONTRACT NO.

CONTRACTOR

CITY STATE

RECOMMENDED: PRIME CONTRACTOR | APPROVED: RESIDENT ENGINEER | DATE:

USKH A quarter century of design for Alaskans

ALASKA DISTRICT CORPS OF ENGINEERS ANCHORAGE, ALASKA

DESIGNED: SVB
DRAWN: LDS
TRACED:
CHECKED: SVB
SUBMITTED:
DR. SECT.

BEN EIELSON JR./SR. HIGH SCHOOL - PHASE 3
EIELSON AIR FORCE BASE, ALASKA

MECHANICAL

HEATING FLOOR PLANS

RECOMMENDED: CHIEF, MILITARY TECHNICAL ENGINEERING BRANCH | APPROVED: CHIEF ENGINEERING DIVISION | DATE:

SCALE: AS SHOWN | SPEC. NO.

DRAWING NUMBER 29-02-38

SHEET OF

REFERENCE NO. M4.1

507202M41(1=1)

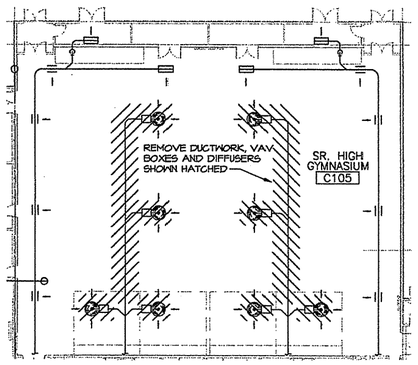

1 PARTIAL AREA 'C' FLOOR PLAN - DEMO
M3.1A
SCALE: 1/16"=1'-0"

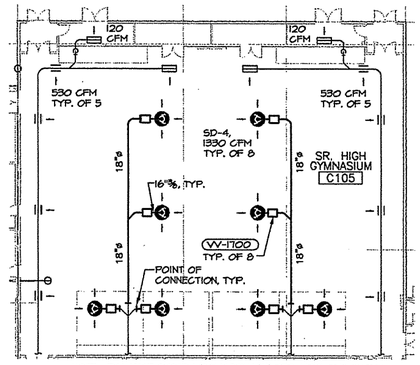

NOTE: BALANCE SYSTEM (20MC35F16(E)) PER AIRFLOWS SHOWN

2 PARTIAL AREA 'C' FLOOR PLAN - NEW
M3.1A
SCALE: 1/16"=1'-0"

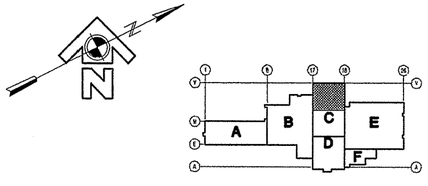

507202M31 (1=1)

REV.	DATE	C.O.	ACTION	DESCRIPTION	BY	APP'D.

CONTRACT NO.

CONTRACTOR

CITY STATE

RECOMMENDED: PRIME CONTRACTOR | APPROVED: RESIDENT ENGINEER | DATE:

USKH A quarter century of design for Alaskans

ALASKA DISTRICT
CORPS OF ENGINEERS
ANCHORAGE, ALASKA

DESIGNED: SVB
DRAWN: LDS
TRACED:
CHECKED: SVB
SUBMITTED:
CK. REST.

BEN EIELSON JR./SR. HIGH SCHOOL - PHASE 3
EIELSON AIR FORCE BASE, ALASKA
MECHANICAL
VENTILATION
FLOOR PLAN - NEW WORK

RECOMMENDED: CHIEF, MILITARY TECHNICAL ENGINEERING BRANCH | APPROVED: CHIEF ENGINEERING DIVISION | DATE:

SCALE: AS SHOWN | SPEC. NO.

DRAWING NUMBER 29-02-38

SHEET OF

REFERENCE NO. M3.1A

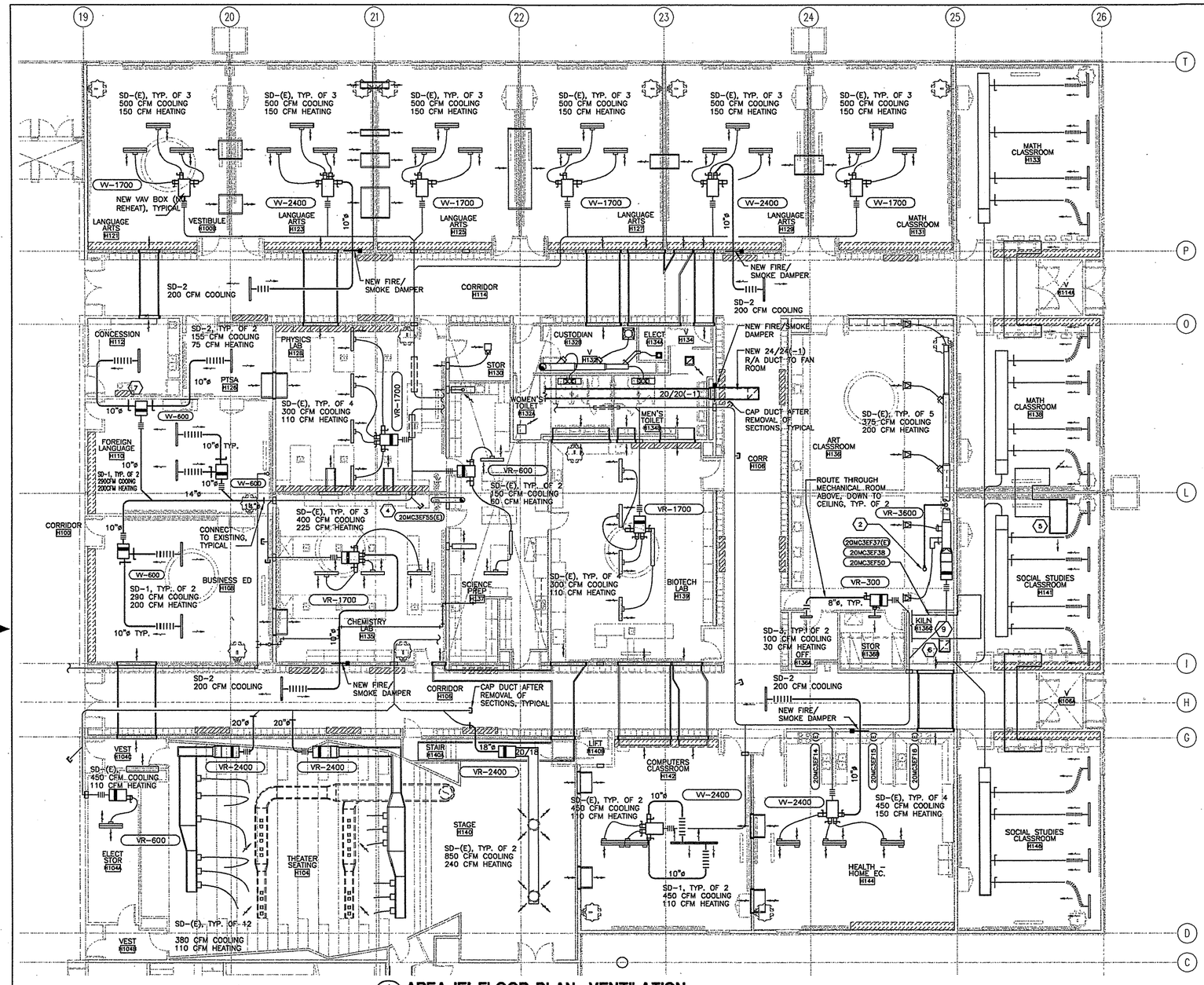

1 M3.1 M3.1 **AREA 'E' FLOOR PLAN- VENTILATION**
SCALE: 1/8"=1'-0"

SHEET NOTES

1. TEMPORARILY SUPPORT ALL CEILING DIFFUSERS AND GRILLES AFTER CEILING SYSTEMS HAVE BEEN REMOVED. COORDINATE WITH ARCHITECTURAL FOR CEILING MODIFICATIONS. REINSTALL CEILING DIFFUSERS IN NEW CEILING SYSTEMS.
2. CONNECT 14"ø TO NEW SPRAY BOOTH (20MC3EF55) AND ROUTE UP TO RH-1 AT ROOF.
3. RELOCATE EXISTING 4 FOOT SLOT DIFFUSER AND TWO EXISTING SPRINKLERS TO NEW SUSPENDED CEILING - SEE ARCHITECTURAL.
4. PROVIDE ELECTRICAL POWER TO 20MC3EF55(E).
5. CONNECT NEW SECTION OF 36/36(-1) TRANSFER AIR DUCT TO EXISTING AS SHOWN.
6. CONNECT 22/22(-1) TO R/A PLENUM, ROUTE TO NEW 22/22 RG-1 IN CEILING OF KILN H136C.
7. RELOCATED RANGE HOOD. RECONNECT DUCTING TO ROOF HOOD.
8. RECIRCULATING RANGE HOOD. NO DUCTWORK.
9. CONNECT NEW EXHAUST FANS 20MC3EF38 AND20MC3EF50 TO EXISTING KILNS AND TO EXISTING EXHAUST DUCT STUBBED DOWN THROUGH ROOF.

GENERAL NOTES

1. VAV BOX INSTALLATION: CONNECT NEW VAV BOXES TO EXISTING S/A DUCTWORK INLET WITH 12" LONG FLEXIBLE DUCT.

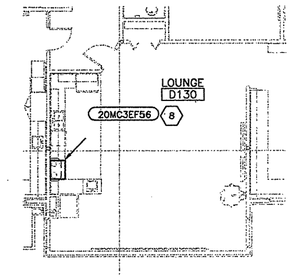

2 M3.1 M3.1 **LOUNGE D130 (AREA D) - VENTILATION**
SCALE: 1/8"=1'-0"

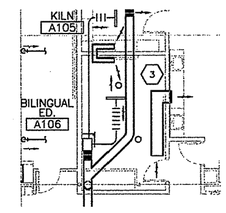

3 M3.1 M3.1 **BILINGUAL ED. A106 (AREA A) - VENTILATION**
SCALE: 1/8"=1'-0"

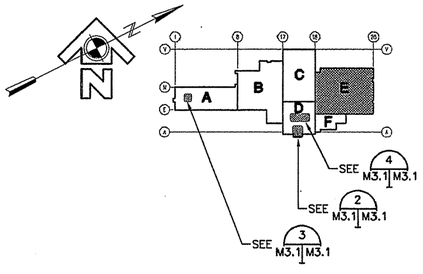

NOTES:

1. ADD RG-1 TO THE FOLLOWING ROOM'S SUSPENDED CEILINGS: H142, H144, H131, H129, H127, H125, H123, H121, H112, H126, H110, H108, H128, H135, H137, AND H139. FINAL LOCATIONS TO BE SHOWN ON CONFORMED DRAWINGS.
2. ADD RG-1 TO 24/24(-1) DUCT WHICH TERMINATES AT CORR H106 CEILING.
3. ADD RG-2 TO OFF H136A AND STOR H136B. ADD RG-2 TO SOFFIT OF ART CLASSROOM H136 JUST OUTSIDE OF OFF H136A AND STOR H136B. CONNECT WITH 10/10(-1) TRANSFER DUCT (2 EACH) ROUTED THROUGH MECHANICAL ROOM AND SOFFIT ENCLOSURE ABOVE.
4. ADD 20/20(-1) TRANSFER AIR DUCT THROUGH WALL AND ABOVE CEILING BETWEEN PTSA H126 AND FOREIGN LANGUAGE H110. DUST SHALL BE 6' LONG AND TERMINATE WITH 90 DEGREE FITTING TURNED UP AT ONE END, EXTENDED 12" ABOVE TOP OF 6' LENGTH.
5. ADD RG-1 TO THE SUSPENDED CEILING OF BILINGUAL ED. A106.

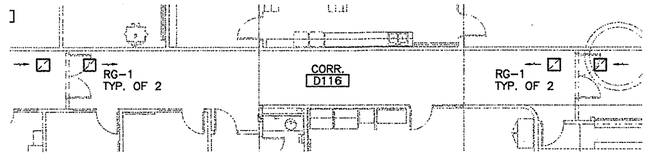

4 M3.1 M3.1 **CORRIDOR D116 (AREA D) - VENTILATION**
SCALE: 1/8"=1'-0"

REFERENCE NO. M3.1

REV.	DATE	C.O.	ACTION	DESCRIPTION	BY	APP'D.

CONTRACT NO.
CONTRACTOR
CITY STATE
RECOMMENDED: PRIME CONTRACTOR
APPROVED: RESIDENT ENGINEER
DATE:

USKH — A quarter century of design for Alaskans

ALASKA DISTRICT
CORPS OF ENGINEERS
ANCHORAGE, ALASKA

DESIGNED: SVB
DRAWN: LDS
TRACED:
CHECKED: SVB
SUBMITTED:
CH. SECT.

BEN EIELSON JR./SR. HIGH SCHOOL - PHASE 3
EIELSON AIR FORCE BASE, ALASKA
MECHANICAL
VENTILATION
FLOOR PLAN - NEW WORK

RECOMMENDED: CHIEF, MILITARY TECHNICAL ENGINEERING BRANCH
APPROVED: CHIEF ENGINEERING DIVISION
DATE:
SCALE: AS SHOWN
SPEC. NO.
DRAWING NUMBER 29-02-38
SHEET OF

507202M31 (1=1)

CORPS OF ENGINEERS

U. S. ARMY

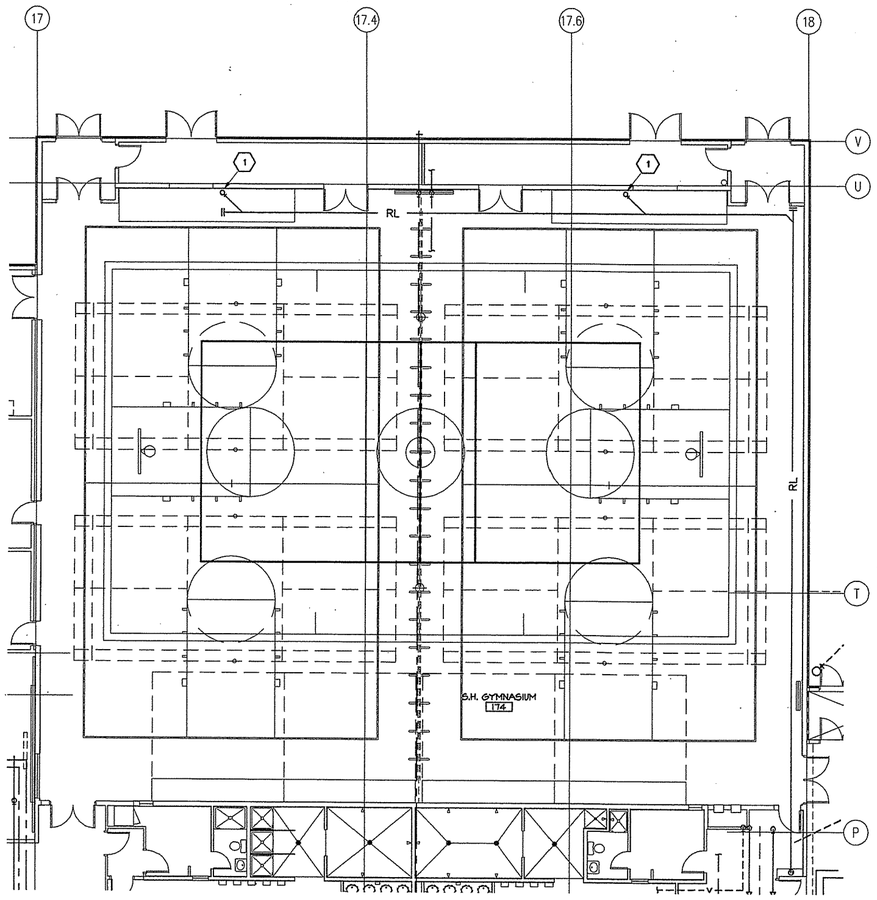

1 M2.3 | M2.3 **GYMNASIUM ROOF DRAIN DEMOLITION PLAN**

SCALE: 1/8"=1'-0"

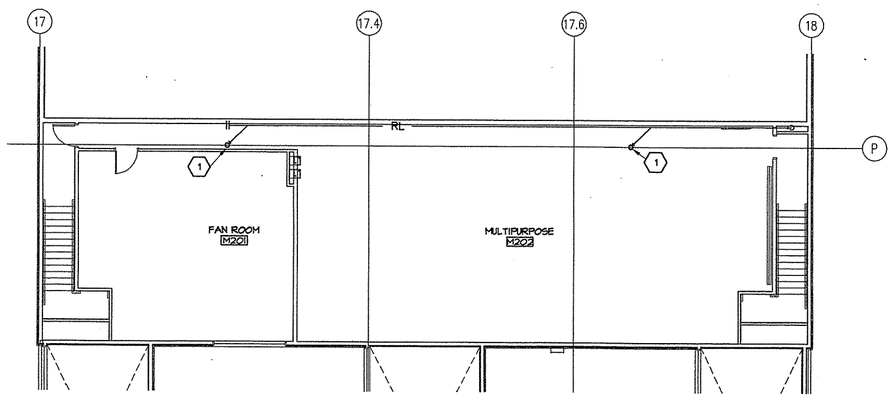

2 M2.3 | M2.3 **MEZZANINE ROOF DRAIN DEMOLITION PLAN**

SCALE: 1/8"=1'-0"

507202M23(1=1)

SHEET NOTES

1. REMOVE EXISTING 3" ROOF DRAIN. SEE 1/M5.1 FOR NEW WORK.

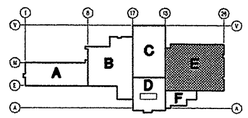

REFERENCE NO. M2.3

REV.	DATE	C.O.	ACTION	DESCRIPTION	BY	APP'D.

CONTRACT NO.

CONTRACTOR

CITY STATE

RECOMMENDED: PRIME CONTRACTOR

APPROVED: RESIDENT ENGINEER

DATE:

USKH — A quarter century of design for Alaskans

ALASKA DISTRICT
CORPS OF ENGINEERS
ANCHORAGE, ALASKA

DESIGNED: SVB
DRAWN: LDS
TRACED:
CHECKED: SVB
SUBMITTED:
OK: REF.

BEN EIELSON JR./SR. HIGH SCHOOL – PHASE 3
EIELSON AIR FORCE BASE, ALASKA

MECHANICAL

GYMNASIUM ROOF DRAINS & CONTROLS DEMOLITION PLANS

RECOMMENDED: CHIEF, MILITARY TECHNICAL ENGINEERING BRANCH

APPROVED: CHIEF ENGINEERING DIVISION

DATE:

SCALE: AS SHOWN

SPEC. NO.

DRAWING NUMBER 29-02-38

SHEET OF

CORPS OF ENGINEERS

U. S. ARMY

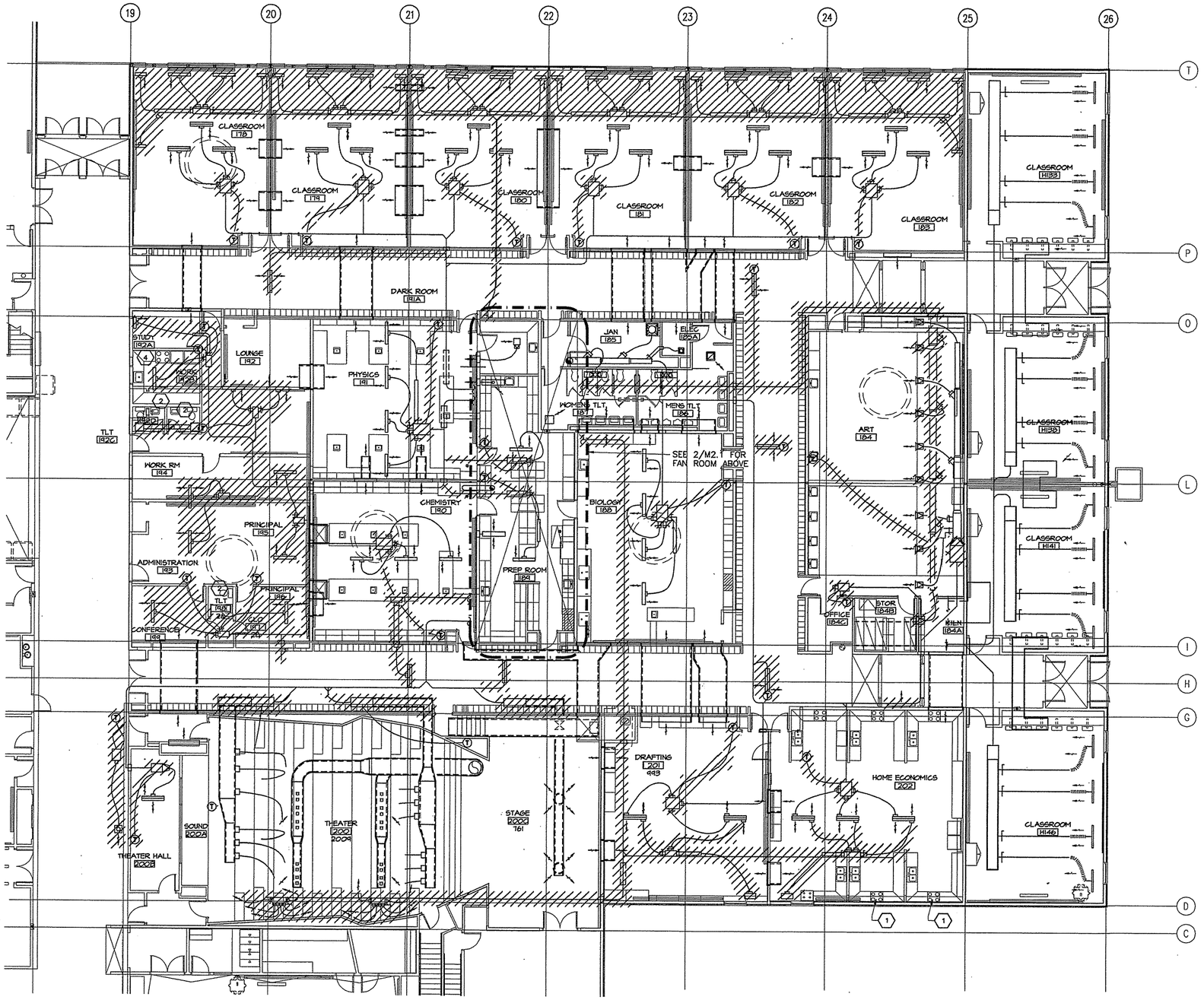

1 AREA 'E' FLOOR PLAN- VENTILATION DEMOLITION
M2.2 | M2.2
SCALE: 1/8"=1'-0"

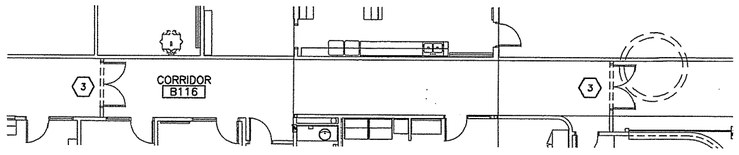

2 CORRIDOR B116 - VENTILATION DEMOLITION
M2.2 | M2.2
SCALE: 1/8"=1'-0"

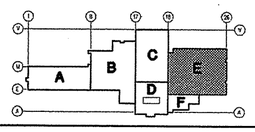

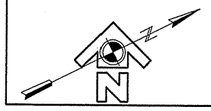

507202M21(1=1)

SHEET NOTES

1. REMOVE RANGE HOOD AND ASSOCIATED DUCTWORK AND ROOF HOOD. PATCH ROOF PENETRATION TO MATCH EXISTING CONSTRUCTION.
2. REMOVE BATHROOM FAN AND ASSOCIATED DUCTWORK AND ROOF HOOD. PATCH ROOF PENETRATION TO MATCH EXISTING CONSTRUCTION.
3. REMOVE TRANSFER AIR GRILLES FROM DOOR FRAMEWORK. PATCH HOLES IN METAL FRAMEWORK LEFT BY SCREWS.
4. RELOCATE RANGE HOOD TO NEW RANGE LOCATION.

GENERAL NOTES

1. REMOVE SYSTEMS SHOWN HATCHED. CAP UNUSED OPENINGS LEFT IN DUCTWORK.

REV.	DATE	C.O.	ACTION	DESCRIPTION	BY	APP'D.

CONTRACT NO.

CONTRACTOR

CITY STATE

RECOMMENDED: PRIME CONTRACTOR | APPROVED: RESIDENT ENGINEER | DATE:

USKH — A quarter century of design for Alaskans

ALASKA DISTRICT
CORPS OF ENGINEERS
ANCHORAGE, ALASKA

DESIGNED: SVB
DRAWN: LDS
TRACED:
CHECKED: SVB
SUBMITTED:
DI. SECT.

BEN EIELSON JR./SR. HIGH SCHOOL – PHASE 3
EIELSON AIR FORCE BASE, ALASKA
MECHANICAL
VENTILATION
FLOOR PLAN – DEMOLITION

RECOMMENDED: CHIEF, MILITARY TECHNICAL ENGINEERING BRANCH | APPROVED: CHIEF ENGINEERING DIVISION | DATE:

SCALE: AS SHOWN | SPEC. NO.

DRAWING NUMBER 29-02-38

SHEET OF

REFERENCE NO. M2.2

CORPS OF ENGINEERS

U. S. ARMY

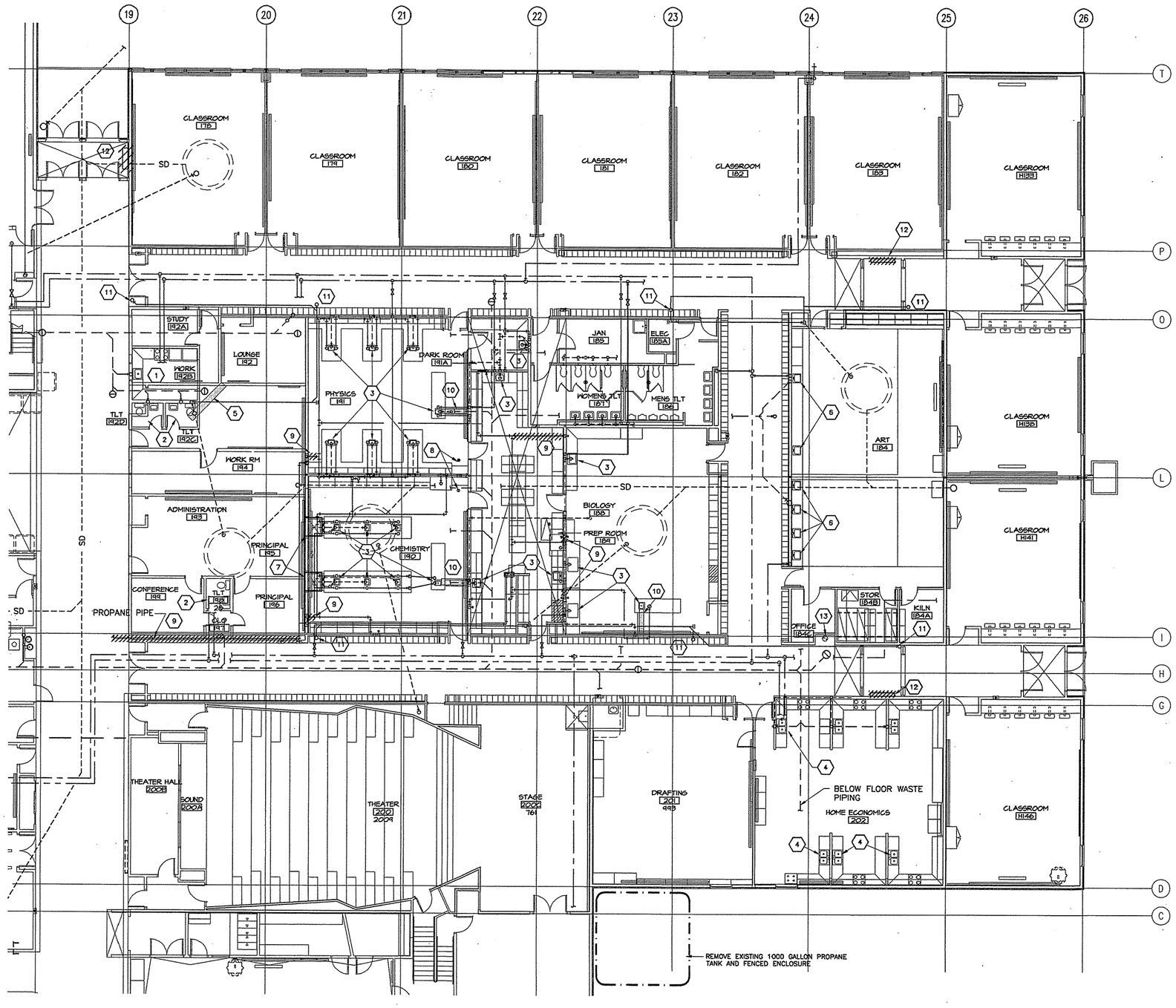

1 M2.1 M2.1 **AREA 'E' FLOOR PLAN- PIPING DEMOLITION**

SCALE: 1/8"=1'-0"

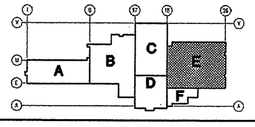

SHEET NOTES

1. REMOVE EXISTING SINK (AS ACM) AND ASSOCIATED PIPING. CAP CW, HW AND VENT AT MAINS; CAP WASTE BELOW FLOOR OR AT MAINS. SEE M5.1 FOR NEW WORK THIS AREA. SEE AB-1.
2. REMOVE EXISTING TOILET ROOM FIXTURES AND ASSOCIATED PIPING. CAP CW, HW AND VENT AT MAINS; CAP WASTE BELOW FLOOR OR AT MAINS. SEE M5.1 FOR NEW WORK THIS AREA.
3. REMOVE ALL LABORATORY SINKS (AS ACM), TURRETS, GAS COCKS AND WATER SERVICE FIXTURES AT ALL LABORATORY CASEWORK IN ROOMS 188, 189, 190, 191 AND 191A. SEE AB-1.
4. REMOVE EXISTING SINK (AS ACM), GARBAGE DISPOSAL AND ASSOCIATED PIPING. CAP CW, HW AND VENT AT MAINS. CAP WASTE BELOW FLOOR. SEE AB-1.
5. APPROXIMATE AREA OF EXISTING FLOOR SLAB TO BE SAWCUT AND REMOVED FOR NEW PLUMBING PIPING. CAP UNUSED PIPING TO BE ABANDONED BELOW SLAB. SEE M5.1 FOR NEW WORK.
6. REMOVE EXISTING SINK (AS ACM) AND FAUCET. SEE 1/M5.1 FOR NEW WORK THIS AREA, SEE AB-1.
7. REMOVE EXISTING LABORATORY PIPING IN SHAFTS AT ENDS OF CASEWORK. SEE M5.1 FOR NEW WORK.
8. REMOVE EXISTING EMERGENCY EYEWASH AND ASSOCIATED PIPING. SEE M5.1 FOR NEW WORK.
9. REMOVE PROPANE PIPING AND ACCESSORIES WHERE HATCHED. SEE M5.1 FOR NEW WORK.
10. APPROXIMATE AREA OF EXISTING FLOOR TO BE SAWCUT AND REMOVED FOR NEW PIPING TO LABORATORY ISLAND. SEE M5.1 FOR NEW WORK. VERIFY LOCATION OF EXISTING UNDERSLAB PIPING.
11. REMOVE EXISTING ROOF DRAIN.
12. REMOVE EXISTING CABINET UNIT HEATER, ASSOCIATED PIPING AND APPURTENANCES TO MAIN. CAP GHS/GHR PIPING.
13. REMOVE EXISTING DRINKING FOUNTAIN. SEE 1/M5.1 FOR NEW WORK.

REV.	DATE	C.O.	ACTION	DESCRIPTION	BY	APP'D.

CONTRACT NO.

CONTRACTOR

CITY STATE

RECOMMENDED: PRIME CONTRACTOR

APPROVED: RESIDENT ENGINEER

DATE:

USKH — A quarter century of design for Alaskans

ALASKA DISTRICT
CORPS OF ENGINEERS
ANCHORAGE, ALASKA

DESIGNED: SVB
DRAWN: LDS
TRACED:
CHECKED: SVB
SUBMITTED:
DIL REC'T.

BEN EIELSON JR./SR. HIGH SCHOOL – PHASE 3
EIELSON AIR FORCE BASE, ALASKA
MECHANICAL
DEMOLITION
FLOOR PLANS – PLUMBING

RECOMMENDED: CHIEF, MILITARY TECHNICAL ENGINEERING BRANCH

APPROVED: CHIEF ENGINEERING DIVISION

DATE:

SCALE: AS SHOWN

SPEC. NO.

DRAWING NUMBER 29-02-38

SHEET OF

REFERENCE NO. M2.1

507202M21(1=1)

AIR OUTLET SCHEDULE

DESIG.	USE	UNIT SIZE	NECK SIZE	THROW	SLOTS	FINISH	BASIS OF DESIGN
SD-1	SUPPLY	48"	10"ø	2-WAY	3	WHITE	TRANE MODEL VSLD
SD-2	SUPPLY	48"	10"ø	2-WAY	2	WHITE	TRANE MODEL VSLD
SD-3	SUPPLY	24"	8"ø	2-WAY	2	WHITE	TRANE MODEL VSLD
SD-4	SUPPLY	–	16"ø	–	–	WHITE	TITUS MODEL TMRA
RG-1	RETURN	24"x24"	–	–	–	WHITE	TITUS MODEL BR WITH 24" T-BAR FOR INSTALLATION IN SUSPENDED CEILING
RG-2	RETURN	10"x10"	–	–	–	WHITE	TITUS MODEL BR

HEATING COIL SCHEDULE

DESIGNATION	SYS.	MBH	ACFM	SIZE W/H (IN.)	FACE VEL. (FPM)	ENTER AIR TEMP (°F)	LEAVE AIR TEMP (°F)	AIR PRESS DROP (IN WG)	GPM	ENTER LIQ TEMP (°F)	LEAVE LIQ TEMP (°F)	LIQ PRESS DROP (FT)	FIN SPACE (FPI)	COIL ROWS	COIL TURB	BASIS OF DESIGN
20MC72H16(E)	20MC3SA12(E)	1036	10,000	72/48	417	-55	40	0.5	77	180	150	–	–	–	–	–
20MC72H23	20MC3SA12(E)	218	10,000	72/48	417	35	55	0.1	16	180	150	–	8	1	YES	PACE

NOTES:
1. HEATING COIL MEDIUM SHALL BE 50% PROPYLENE GLYCOL AND 50% WATER SOLUTION.

CONTROL VALVE SCHEDULE

DESIGNATION	SERVICE	FLOW MEDIUM	CONN. SIZE	FLOW RATE	CV RATING	VALVE LOCATION	BASIS OF DESIGN
CV-14(E)	20MC72H16(E)	50/50 P.G./WATER	2-1/2"	77	–	FAN RM. E201 PHC	HONEYWELL
CV-24	20MC72H23	50/50 P.G./WATER	–	16	–	FAN RM. E201 HC	HONEYWELL
SMALL RHC/RP	FOR GPM <1.8	50/50 P.G./WATER	1/2	VARIES	1.0	VARIES	HONEYWELL V-5011
LARGE RHC/RP	FOR GPM >1.8	50/50 P.G./WATER	1/2	VARIES	1.6	VARIES	HONEYWELL V-5011

REHEAT COIL SCHEDULE*

FNSB/SD NUMBER	LOCATION	CLG CFM (MAXIMUM VAV SETPOINT)	HTG CFM (MINIMUM VAV SETPOINT)	LEAVING AIR TEMP. °F	MBTU/H	GPM
20MC7RH33	FOREIGN LANGUAGE H110	310	150	–	6.0	0.67
20MC7RH34	FOREIGN LANQUAGE H110	450	300	–	11.9	1.33
20MC7RH35	BUSINESS ED H108	580	450	–	11.9	1.33
20MC7RH36	ELECTRICAL STORAGE H104A	450	110	–	3.0	0.33
20MC7RH37	THEATER SEATING H104	2280	660	–	20.9	2.33
20MC7RH38	THEATER SEATING H104	2280	660	–	20.9	2.33
20MC7RH39	STAGE H140	1700	480	–	15.0	1.67
20MC7RH40	CHEMISTRY LAB H135	1200	675	–	18.0	2.00
20MC7RH41	PHYSICS LAB H128	1200	440	–	15.0	1.67
20MC7RH42	SCIENCE PREP H137	300	120	–	9.0	1.00
20MC7RH43	BIOTECH LAB H139	1200	440	–	15.0	1.67
20MC7RH44	ART CLASSROOM H136	200	60	–	3.0	0.33
20MC7RH45	ART CLASSROOM H136	1875	1000	–	57.0	6.33

*NOTE: ENTERING AIR TEMP. = 65°F, ENTERING LIQUID TEMP. = 180°F
LEAVING LIQUID TEMP. = 160°F, FLUID = 50/50 P.G./WATER

MECHANICAL EQUIPMENT SCHEDULE

DESIGNATION	EQUIPMENT	CAPACITY	LOCATION	ELECTRICAL	REMARKS	MANUFACTURER AND MODEL (OR APPROVED EQUAL)
20MC7CT03	EXPANSION TANK	110 GAL. TOTAL, 34 GAL. ACCEPTANCE	–	–	–	AMTROL MODEL AX240
20MC7CT04	EXPANSION TANK	110 GAL. TOTAL, 34 GAL. ACCEPTANCE	–	–	–	AMTROL MODEL AX240
20MC7CT05	EXPANSION TANK	110 GAL. TOTAL, 34 GAL. ACCEPTANCE	–	–	–	AMTROL MODEL AX240

FAN SCHEDULE

DESIGNATION	LOCATION	SERVICE	TYPE	S.C.F.M.	S.P.	ELECTRICAL HP, VOLTS, PHASE	REMARKS	MANUFACTURER AND MODEL (OR PREAPPROVED EQUAL)
20MC3RA02(E)	FAN ROOM E201	EXISTING ROOMS OF AREA E	RETURN	–	–	10, –, –	REMOVE FAN INLET VANES	PROVIDE NEW VFD CONTROLLER
20MC3SA11(E)	FAN ROOM E144	EAST SIDE OF AREA E	VENT/COOLING	–	–	5, 208, 3	EXISTING	PACE
20MC3SA12(E)	FAN ROOM E201	EXISTING ROOMS OF AREA E	VENT/COOLING	–	–	25, 208, 3	REMOVE FAN INLET VANES	PROVIDE NEW VFD CONTROLLER
20MC3EF14(E)	HOME EC. H142	RANGE HOOD	EXHAUST	–	–	–, 115, 1	EXISTING	GENERAL ELECTRIC
20MC3EF15(E)	HOME EC. H142	RANGE HOOD	EXHAUST	–	–	–, 115, 1	EXISTING	GENERAL ELECTRIC
20MC3EF16(E)	HOME EC. H142	RANGE HOOD	EXHAUST	–	–	–, 115, 1	EXISTING	GENERAL ELECTRIC
20MC3EF28(E)	FAN ROOM E201	WOMEN'S E121/MEN'S E126	EXHAUST	–	–	1/2, 115, 1	EXISTING	PACE
20MC3EF29(E)	FAN ROOM E201	CHEMISTRY LAB E116	EXHAUST	–	–	3/4, 208, 3	EXISTING	PACE
20MC3EF30(E)	FAN ROOM E201	SCIENCE PREP E119	EXHAUST	–	–	3/4, 208, 3	EXISTING	PACE
20MC3EF35(E)	FAN ROOM E144	EAST SIDE OF AREA E	RELIEF	4860	0.25	3/4, 208, 1	WALL MTD	GREENHECK MODEL SBE-2L20-7
20MC3EF37(E)	KILN H136C	GENERAL	COOLING	1241	0.5	812W, 115, 1	W/ LEK-TROL	PENN MODEL Z102H – CEILING MOUNTED
20MC3EF38	KILN H136C	KILN	COOLING/EXHAUST	60	0.5	130W, 115, 1	KILN MTD	SKUTT ENVIROMENTAL
20MC3EF50	KILN H136C	KILN	COOLING/EXHAUST	60	0.5	130W, 115, 1	KILN MTD	SKUTT ENVIROMENTAL
20MC3EF55	ART ROOM H136	SPRAY BOOTH	EXHAUST	773	3/4"	1/3, 110, 1	–	SEE ARCHITECTURAL
20MC3EF56	LOUNGE D130	KITCHEN RANGE	CARBON FILTER	–	–	–, 110, 1	–	NON-DUCTED RANGE HOOD
20MC3EF57(E)	CHEMISTRY H135	FUME BOOTH	EXHAUST	–	–	–	RECONNECT ELECTRICAL	KEWAUNEE
20MC3EF58(E)	CONCESSION H112	KITCHEN RANGE	–	–	–	–, 110, 1	RE-USE EXISTING	–

PLUMBING FIXTURE CONNECTION SCHEDULE

NO.	FIXTURE	TRAP	WASTE	VENT	CW	HW	REMARKS
P-1	EYEWASH/SHOWER	–	–	–	1-1/4"	–	EMERGENCY
P-2	SINK (1 COMPARTMENT)	1-1/2"	1-1/2"	1-1/4"	1/2"	1/2"	
P-3	SINK (2 COMPARTMENT)	1-1/2"	1-1/2"	1-1/4"	1/2"	1/2"	WITH GARGABE DISPOSER
P-4	ART ROOM SINK	1-1/2"	1-1/2"	1-1/4"	1/2"	1/2"	
FD-1	FLOOR DRAIN	2"	1-1/2"	1-1/2"	–	–	
DF-1	DRINKING FOUNTAIN WITH CHILLER	1-1/2"	1-1/4"	1-1/4"	1/2"	–	HANDICAPPED ACCESSIBLE

ROOF HOOD SCHEDULE

SYMBOL	LOCATION	FUNCTION	ROUGH OPENNG THROUGH ROOF (INCHES)	MOTORIZED DAMPER	BACKDRAFT DAMPER	SERVICE	BASIS OF DESIGN
RH-1	ARTS ROOM H136	EXHAUST	20/20	NO	YES	20MC3EF55	PENN AIRETTE

BASEBOARD SCHEDULE

DESIGNATION	AVG. LIQUID TEMP (°F)	ENTER. AIR TEMP (°F)	TEMP. C.F.	LIQUID VEL. C.F.	GLYCOL C.F.	TIERS	FACTORED BTU/LF	ELEMENT CATALOG NUMBER (COPPER-ALUMINUM)	ELEMENT SIZE	ELEMENT ENCLOSURE	BASIS OF DESIGN
BB-1	170	65	.61	0.95	0.9	2	1315	C 3/4 435	4-1/4"x3-5/8", 50 FPF	FLAT TOP	STERLING VB AR20

REV.	DATE	C.O.	ACTION	DESCRIPTION	BY	APP'D.

CONTRACT NO.
CONTRACTOR
CITY STATE
RECOMMENDED: PRIME CONTRACTOR
APPROVED: RESIDENT ENGINEER
DATE:

USKH — A quarter century of design for Alaskans

ALASKA DISTRICT
CORPS OF ENGINEERS
ANCHORAGE, ALASKA

DESIGNED: SVB
DRAWN: LDS
TRACED:
CHECKED: SVB
SUBMITTED:
CHI. SECT.

BEN EIELSON JR./SR. HIGH SCHOOL – PHASE 3
EIELSON AIR FORCE BASE, ALASKA
MECHANICAL
SCHEDULES

RECOMMENDED: CHIEF, MILITARY TECHNICAL ENGINEERING BRANCH
APPROVED: CHIEF ENGINEERING DIVISION
DATE:
SCALE: NONE
SPEC. NO.
DRAWING NUMBER 29-02-38
SHEET OF

REFERENCE NO. M1.1

507202M11 (1=1)

LIST OF ABBREVIATIONS

@	AT	CLG	CEILING	ELEC	ELECTRIC, ELECTRICAL	HW	HOT WATER	OBVD	OPPOSED BLADE VOLUME DAMPER	SD	SLOT DIFFUSER/GRILLE
AAV	AUTOMATIC AIR VENT	CLR	CLEAR, CLEARANCE	EST	ESTIMATE	HWC	HOT WATER CIRCULATION	OC	ON CENTER	SF	SQUARE FOOT
ABS	BUTYL STYRENE PIPE	CMP	CORRUGATED METAL PIPE	EXIST	EXISTING	HWR	HEATING WATER RETURN	OD	OUTSIDE DIAMETER	SF	SUPPLY FAN
ABV	ABOVE	CMU	CONCRETE MASONRY UNIT	°F	DEGREES FAHRENHEIT	HWS	HEATING WATER SUPPLY	OFD	OVERFLOW DRAIN	SPEC	SPECIFICATION
ACU	AIR CONDITIONING UNIT	CO	CLEANOUT	FCO	FLOOR CLEAN OUT	ID	INSIDE DIMENSION	OH	OVERHEAD	SQ	SQUARE
AFF	ABOVE FINISHED FLOOR	COMB	COMBINATION	FD	FIRE DAMPER	IE	INVERT ELEVATION	OPP	OPPOSED	SS	STAINLESS STEEL
AHU	AIR HANDLING UNIT	CONC	CONCRETE	FD	FLOOR DRAIN	IN	INCH	P	PLUMBING FIXTURE	STA	STATION
ALT	ALTERNATE	CONN	CONNECTION	FH	FIRE HYDRANT	INCL	INCLUDE, INCLUDING	PCF	POUNDS PER CUBIC FOOT	STD	STANDARD
APPROX	APPROXIMATE	COORD	COORDINATE	FIN	FINISHED	INV	INVERT	PH	PHASE	STO	STORAGE
ARCH	ARCHITECT, ARCHITECTURAL	CP	CONCRETE PIPE	FLR	FLOOR	L	LENGTH	PI	POINT OF INTERSECTION	T	THERMOSTAT
ASPH	ASPHALT	CR	CONDENSATE RETURN	FLEX	FLEXIBLE	LAB	LABORATORY	PNEU	PNEUMATIC	T	TEMPERATURE SENSOR
ASSY	ASSEMBLY	CUH	CABINET UNIT HEATER	FM	FACTORY MUTUAL	LAV	LAVATORY	PP	POWER POLE	THK	THICK
AUTO	AUTOMATIC	CW	COLD WATER	FND	FOUNDATION	LB/HR	POUNDS PER HOUR	PRV	PRESSURE RELIEF VALVE	TP	TELEPHONE POLE
BAL	BALANCING	CWC	COLD WATER CIRCULATION	FPM	FEET PER MINUTE	LF	LINEAR FEET	PRV	PRESSURE REDUCING VALVE	TYP	TYPICAL
BB	BASEBOARD RADIATION	CY	CUBIC YARD	FT	FOOT	MA	MAKEUP AIR	PSI	POUNDS PER SQUARE INCH (GAUGE)	UH	UNIT HEATER
BDD	BACKDRAFT DAMPER	DBL	DOUBLE	GA	GAUGE	MAX	MAXIMUM	PSIA	POUNDS PER SQUARE INCH (ABSOLUTE)	UL	UNDERWRITERS LABORATORY
BLDG	BUILDING	DEMO	DEMOLISH, DEMOLITION	GAL	GALLON	MBH	ONE THOUSAND BTU PER HOUR	PVC	POLYVINYL CHLORIDE PIPE	USGS	UNITED STATES GEOLOGICAL SURVEY
BLW	BELOW	DEPT	DEPARTMENT	GALV	GALVANIZED	MD	MOTORIZED DAMPER	PVMT	PAVEMENT	V	SANITARY VENT
BM	BENCH MARK	DF	DRINKING FOUNTAIN	GCO	GRADE CLEANOUT	MECH	MECHANICAL	R	RADIUS	V	VOLT
BTM	BOTTOM	DHW	DOMESTIC HOT WATER	GHR	GLYCOL HEATING RETURN	MFR	MANUFACTURER	R/A	RETURN AIR	VAV	VARIABLE AIR VOLUME
BTUH	BRITISH THERMAL UNITS PER HOUR	DIA	DIAMETER	GHS	GLYCOL HEATING SUPPLY	MH	MANHOLE	RD	ROOF DRAIN	VD	VOLUME DAMPER
BVAV	BYPASS VARIABLE AIR VOLUME	DIP	DUCTILE IRON PIPE	GI	GALVANIZED IRON	MIN	MINUTE	REF	REFERENCE, REFER TO	VERT	VERTICAL
C	CONDUIT	DIV	DIVISION	GLULLAM	GLUE LAMINATED	MISC	MISCELLANEOUS	REV	REVISION	VSD	VARIABLE SPEED DRIVE
C	COOLING (THERMOSTAT)	DN	DOWN	GPM	GALLONS PER MINUTE	MS	MOTOR STARTER	RF	RELIEF FAN	VTR	VENT THRU ROOF
C/A	COMBUSTION AIR	DWG	DRAWING	GWB	GYPSUM WALL BOARD	MTD	MOUNTED	RM	ROOM	W	WASTE
CB	CATCH BASIN	E	EAST	H	HEATING (THERMOSTAT)	N/A	NOT APPLICABLE	RPM	REVOLUTIONS PER MINUTE	W/	WITH
CF	CUBIC FEET	E	ELECTRIC LINE OR CONDUIT	HB	HOSE BIB	NC	NORMALLY CLOSED	S	SANITARY SEWER	WC	WATER CLOSET
CFM	CUBIC FEET PER MINUTE	E	EXISTING	HORIZ	HORIZONTAL	NIC	NOT IN CONTRACT	S/A	SUPPLY AIR	WCO	WALL CLEANOUT
CI	CAST IRON	EA	EACH	HP	HORSE POWER	NO	NORMALLY OPEN	SCH	SCHEDULE	W/O	WITHOUT
℄	CENTERLINE	E/A	EXHAUST AIR	HR	HOUR	NTS	NOT TO SCALE	SD	STORM DRAIN	WSP	WOOD STAVE PIPE
CIRC	CIRCULATING	EF	EXHAUST FAN	HTG	HEATING	O/A	OUTSIDE AIR	SEC	SECTION, SECOND	WWF	WOVEN WIRE FABRIC
		EL	ELEVATION	HVAC	HEATING/VENTILATING AIR CONDITIONING						

MECHANICAL LEGEND

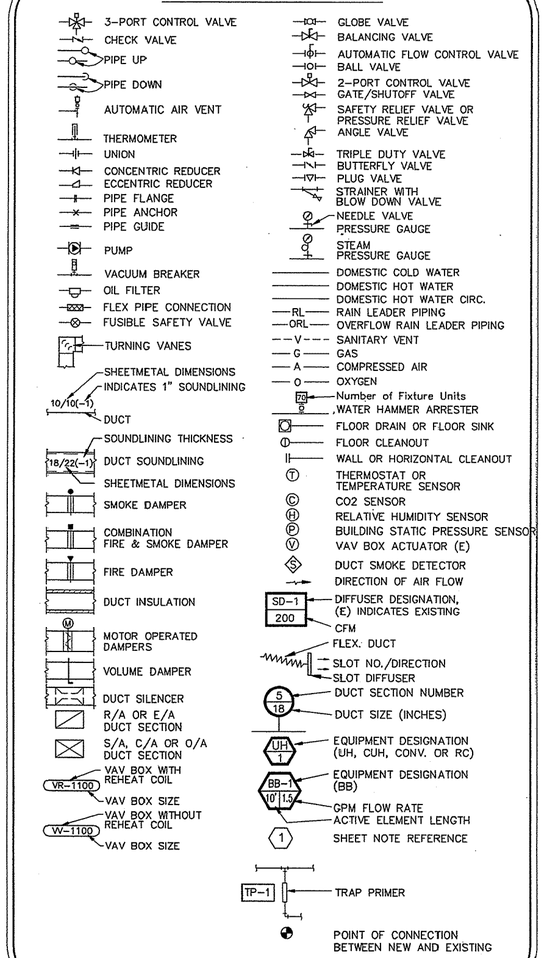

ALL SYMBOLS DO NOT NECESSARILY APPEAR ON DRAWINGS

REV.	DATE	C.O.	ACTION	DESCRIPTION	BY	APP'D.

CONTRACT NO.

CONTRACTOR

CITY STATE

RECOMMENDED: (PRIME CONTRACTOR) APPROVED: (RESIDENT ENGINEER) DATE:

USKH — A quarter century of design for Alaskans

ALASKA DISTRICT
CORPS OF ENGINEERS
ANCHORAGE, ALASKA

DESIGNED: SVB
DRAWN: LDS
TRACED:
CHECKED: SVB
SUBMITTED:
CH. SECT.

BEN EIELSON JR./SR. HIGH SCHOOL – PHASE 3
EIELSON AIR FORCE BASE, ALASKA
MECHANICAL
LEGEND AND ABBREVIATIONS

RECOMMENDED: (CHIEF, MILITARY TECHNICAL ENGINEERING BRANCH) APPROVED: (CHIEF ENGINEERING DIVISION) DATE:

SCALE: NONE SPEC. NO.

DRAWING NUMBER 29-02-38

SHEET OF

REFERENCE NO. M1.0

507202M10 (1=1)