MOEN
SMART WATER NETWORK

SPECIFICATIONS

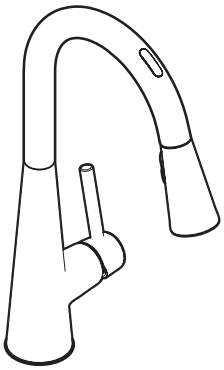

SMART FAUCET

Sleek™ Single Handle High Arc Pulldown Kitchen Faucet

Models: 7864EV series

NOTE: THIS FAUCET IS DESIGNED TO BE INSTALLED THROUGH 1 HOLE, 1-1/2" (38mm) MIN. DIA.

(3-HOLE ESCUTCHEON INCLUDED)

just ask | alexa

works with Hey Google

FAUCET DESCRIPTION
- Versatile, hands-free convenience in the kitchen
- PowerBoost™ technology provides boosted water performance with a push of a button
- Allows users to control the faucet in 4 unique ways: Handle, Sensor, Voice and Mobile App
- Powered by 6 D alkaline batteries or optional AC adapter with power splitter (sold separately)
- Reflex™ pulldown system offers smooth operation, easy movement and secure docking
- Metal construction with various finishes identified by suffix
- Duralock™ quick connect
- Pulldown spray with 68" braided hose
- Control box flexible supply lines with 3/8" compression fittings
- High arc spout provides height and reach to fill or clean large pots while pull down wand provides the maneuverability for cleaning or rinsing

OPERATION
- Lever style handle
- Thermostatic temperature controlled by handle sensor, voice or Mobile app
- Operates with less than 5 lbs. of force
- Operates in stream or spray mode in the pulldown or retracted position
- Spout rotates 100 degrees
- WiFi enabled smart phone connectivity
- Smart phone app available for iOS and Android

FLOW
- Flow is limited to 1.5 gpm (5.7 L/min) at 60 psi

CARTRIDGE
- 1255™ Duralast™ cartridge

STANDARDS
- Third party certified to, ASME A112.18.1/CSA B125.1 and all applicable requirements referenced therein including NSF 61/9 & 372
- Third party certified to meet FCC part 15 Class B
- Meets CalGreen and Georgia SB370 requirements
- Complies with California Proposition 65 and with the Federal Safe Drinking Water Act
- The backflow protection system in the device consists of two independently operating check valves, a primary and a secondary which prevent backflow
- ADA for lever handle

WARRANTY
- Limited lifetime warranty against leaks, drips, finish defects to the original consumer purchaser
- 5 year warranty electronic operation defects to the original consumer purchaser
- 5 year warranty against leaks, drips, finish defects if used in commercial installations
- 1 year warranty against electronic operation defects if used in commercial installations

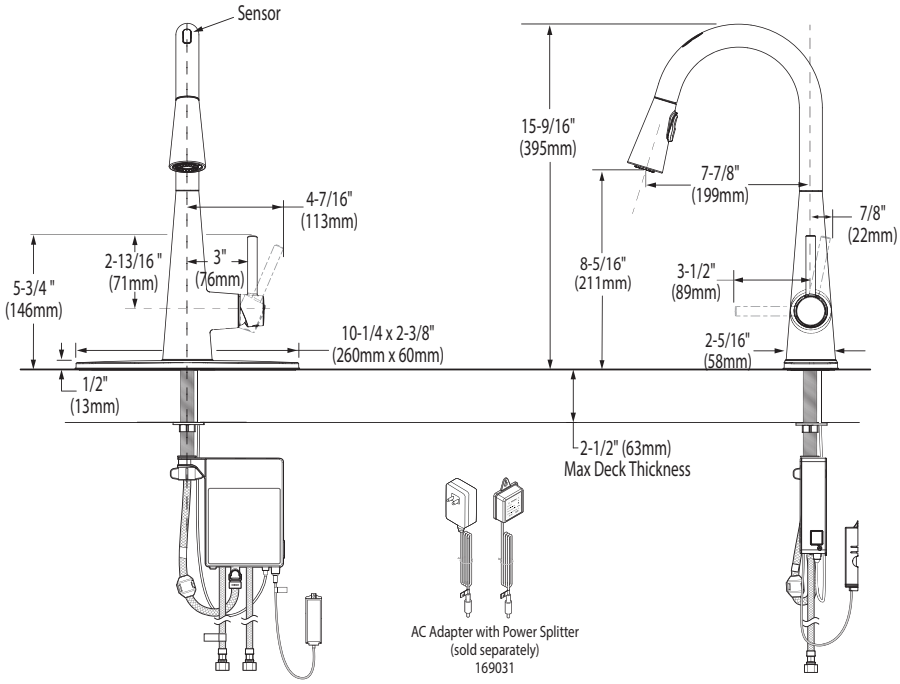

Close up view of Control Box

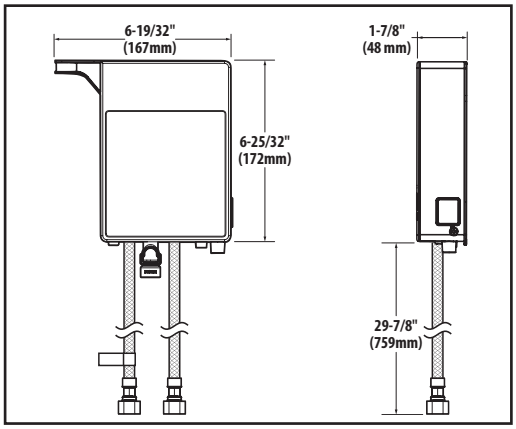

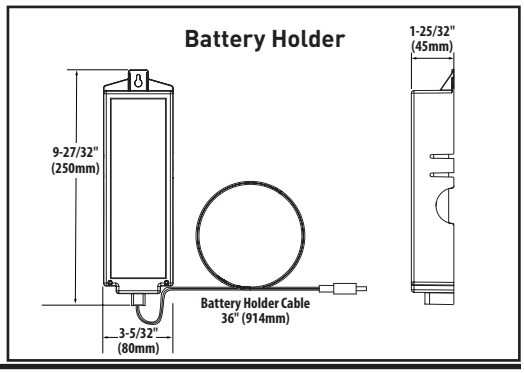

FOR MORE INFORMATION CALL: 1-844-633-8356
moen.com

12/10/2022 SPC#6173 500005425S3
Rev.Date:04/14

LYRUSFLEX
ELITE SERIES

GLACIER

GRAND

LASSEN

MESA

REEF

SNOW

TETON

UINTA

ZION

DELANO

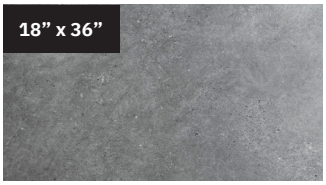

NEBO

TIMPANOGAS

Specifications

Material: 100% virgin vinyl with fiberglass stability layer

Plank Sizes: 9” x 60” | 18” x 36”

Thickness: 5 mm

Wear Layer: 30 mils (ceramic bead-infused)

Finish: Natural matte emboss

Bevel: Micro-beveled edge

Installation Method: Loose lay/glue down

Plank Visuals (2x unique): Real Grain Technology

Features

- **Waterproof**
- **Pet Friendly**
- **Stain Resistant**
- **Dent Resistant**

Packaging

SQ/FT per Carton (9” x 60”): 30.0

SQ/FT per Carton (18” x 36”): 27.0

Warranties

Multifamily/Residential: 20 Year

Medium Commercial: 10 year

Certification

- **SCS FloorScore® Certified**
- **Green Guard Gold**

LYRUSFLEX
PREMIUM SERIES

GLACIER

GRAND

LASSEN

MESA

REEF

SNOW

TETON

UINTA

ZION

DELANO

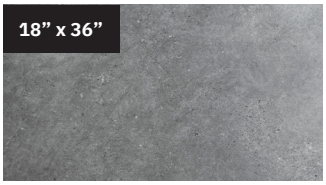

NEBO

TIMPANOGAS

Specifications

Material: 100% virgin vinyl with fiberglass stability layer

Plank Sizes: 9” x 60” | 18” x 36”

Thickness: 3 mm

Wear Layer: 20 mils (ceramic bead-infused)

Finish: Natural matte emboss

Bevel: Micro-beveled edge

Installation Method: Loose lay/glue down

Plank Visuals (2x unique): Real Grain Technology

Features

- **Waterproof**
- **Stain Resistant**
- **Pet Friendly**
- **Dent Resistant**

Packaging

SQ/FT per Carton (9” x 60”): 45.0

SQ/FT per Carton (18” x 36”): 45.0

Warranties

Residential: 20 Year

Multifamily/Light Commercial: 10 year

Certification

- **SCS FloorScore® Certified**
- **Green Guard Gold**

LYRUSFLEX
SELECT SERIES

GRAND

LASSEN

MESA

TETON

Specifications

Material: 100% virgin vinyl

Plank Sizes: 7” x 48”

Thickness: 2 mm

Wear Layer: 12 mils (ceramic bead-infused)

Finish: Natural matte emboss

Bevel: Square edge

Installation Method: Glue down

Features

- **Waterproof**
- **Stain Resistant**
- **Pet Friendly**
- **Dent Resistant**

Packaging

SQ/FT per Carton (7” x 48”): 51.33

Warranties

Residential: 10 Year

Multifamily: 10 year

Certification

- **SCS FloorScore® Certified**
- **Green Guard Gold**

STONE COMPOSITE
ELITE SERIES

ACADIA

BASIN

BEND

BISCAYNE

CARLSBAD

CASCADE

CONGAREE

CUYAHOGA

DENALI

GATES

GLACIER

GRAND

JOSHUA

KATMAI

KENAI

KOBUK

LASSEN

MAMMOTH

More Elite colors on next page.

Specifications

Material: Stone Polymer Composite

Plank Size: 9”x 72”

Thickness: 5 mm (core) + 1.5 mm (pad)

Wear Layer: 30 mils (ceramic bead-infused)

Plank Visuals (2x unique): Real Grain Technology

Finish: Matte finish embossed in register

Bevel: Enhanced beveled edge

Attached Pad: 1.5 mm acoustical IXPE

Installation Method: Unilin locking system

Features

- **Waterproof**
- **Pet Friendly**
- **Stain Resistant**
- **Sound Absorption** *

** ASTM E492-09 Impact Sound Conduction IIC 57*

Packaging

SQ/FT per Carton: 27

Warranties

Commercial: 10 year

Residential: 20 year

Certification

- **SCS FloorScore® Certified**
- **Green Guard Gold**

STONE COMPOSITE
ELITE SERIES

Elite Series Continued

MESA

PINNACLE

REEF

ROOSEVELT

ROYALE

SAGUARO

SAND

SHENANDOAH

SNOW

SPRINGS

TETON

UINTA

WRANGELL

ZION

Specifications

Material: Stone Polymer Composite

Plank Size: 9”x 72”

Thickness: 5 mm (core) + 1.5 mm (pad)

Wear Layer: 30 mils (ceramic bead-infused)

Plank Visuals (2x unique): Real Grain Technology

Finish: Matte finish embossed in register

Bevel: Enhanced beveled edge

Attached Pad: 1.5 mm acoustical IXPE

Installation Method: Unilin locking system

Features

- **Waterproof**
- **Pet Friendly**
- **Stain Resistant**
- **Sound Absorption** *

** ASTM E492-09 Impact Sound Conduction IIC 57*

Packaging

SQ/FT per Carton: 27

Warranties

Commercial: 10 year

Residential: 20 year

Certification

- **SCS FloorScore® Certified**
- **Green Guard Gold**

STONE COMPOSITE
PREMIUM SERIES

ACKLEY

BANNACK

BRUNEAU

DAROGA

EDNESS

FREMONT

GLENDO

GUERNSEY

GUNLOCK

KITSAP

KODACHROME

LORY

PALISADE

PONDEROSA

SYLVAN

Specifications

Material: Stone Polymer Composite

Plank Size: 9”x 60”

Thickness: 4.5 mm (core) + 1.5 mm (pad)

Wear Layer: 20 mils (ceramic bead-infused)

Plank Visuals (2x unique): Real Grain Technology

Finish: Matte finish Natural Embossing

Bevel: Enhanced beveled edge

Attached Pad: 1.5 mm acoustical IXPE

Installation Method: Unilin locking system

Features

- **Waterproof**
- **Stain Resistant**
- **Pet Friendly**
- **Sound Absorption** *

** ASTM E492-09 Impact Sound Conduction IIC 57*

Packaging

SQ/FT per Carton: 33.60

Warranties

Light Commercial: 10 year **Residential:** 20 year

Certification

- **SCS FloorScore® Certified**
- **Green Guard Gold**

STONE COMPOSITE
SELECT SERIES

GLACIER

GRAND

LASSEN

MESA

REEF

SNOW

TETON

UINTA

ZION

Specifications

Material: Stone Polymer Composite

Plank Size: 7”x 60”

Thickness: 4 mm (core) + 1.5 mm (attached IXPE pad)

Wear Layer: 20 mils

Finish: Matte finish embossed in register

Bevel: Micro-beveled edge

Attached Pad: 1.5 mm acoustical IXPE

Installation Method: Unilin locking system

Features

- **Waterproof**
- **Pet Friendly**
- **Stain Resistant**
- **Sound Absorption** *

** ASTM E492-09 Impact Sound Conduction IIC 57*

Packaging

SQ/FT per Carton: 29.70

Warranties

Multifamily: 10 year

Residential: 20 year

Light Commercial: 10 year

Certification

- **SCS FloorScore® Certified**
- **Green Guard Gold**

STONE COMPOSITE

COMPOSITION & TRANSITIONS

Composition

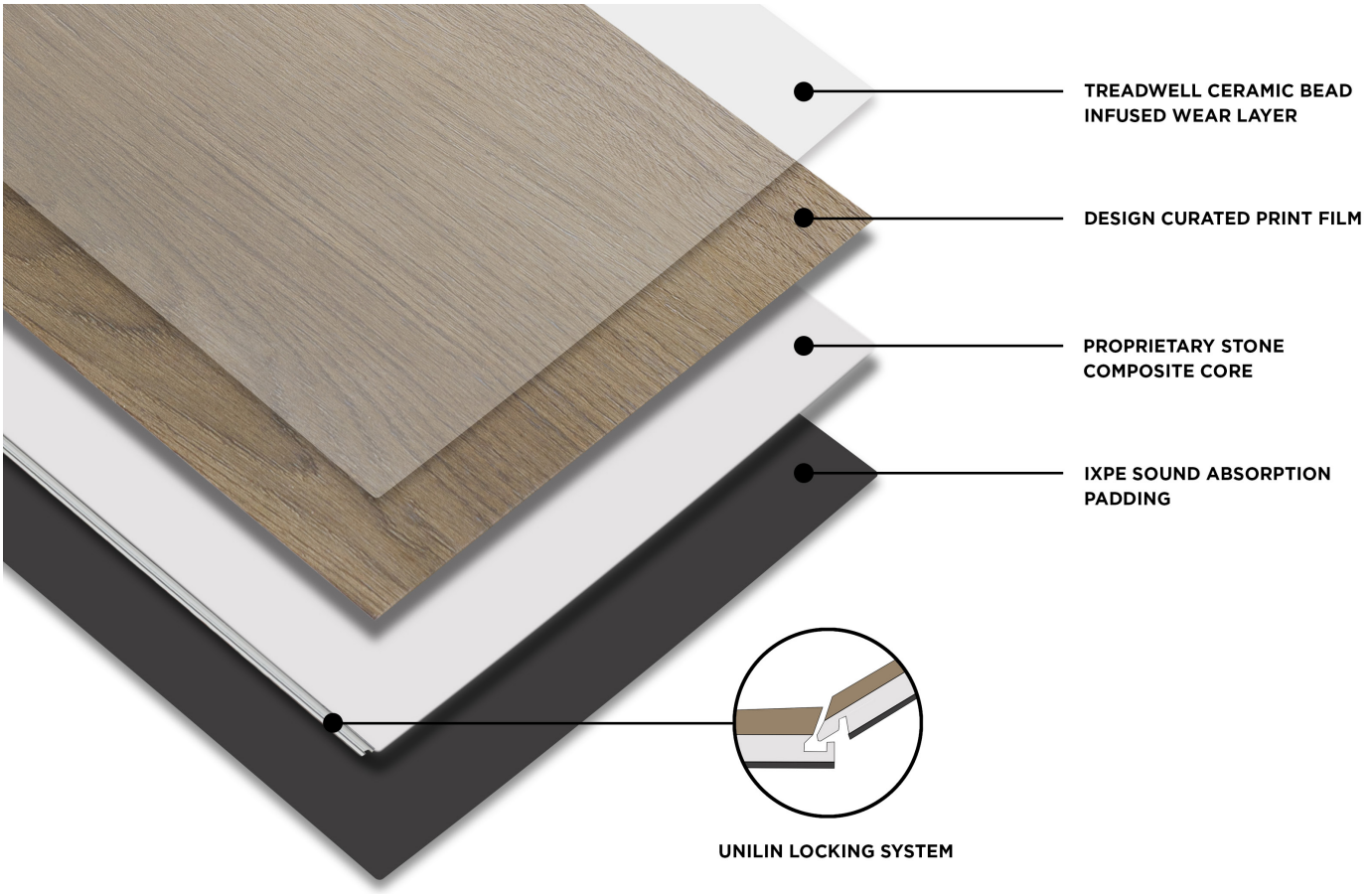

Transitions

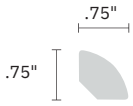

QUARTER ROUND

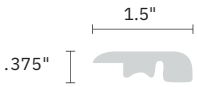

END CAP

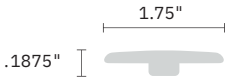

T MOLDING

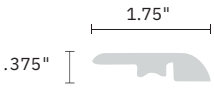

REDUCER

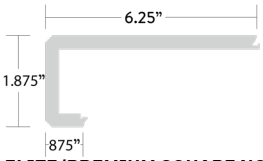

ELITE/PREMIUM SQUARE NOSE

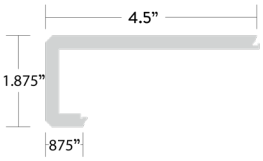

SELECT SQUARE NOSE