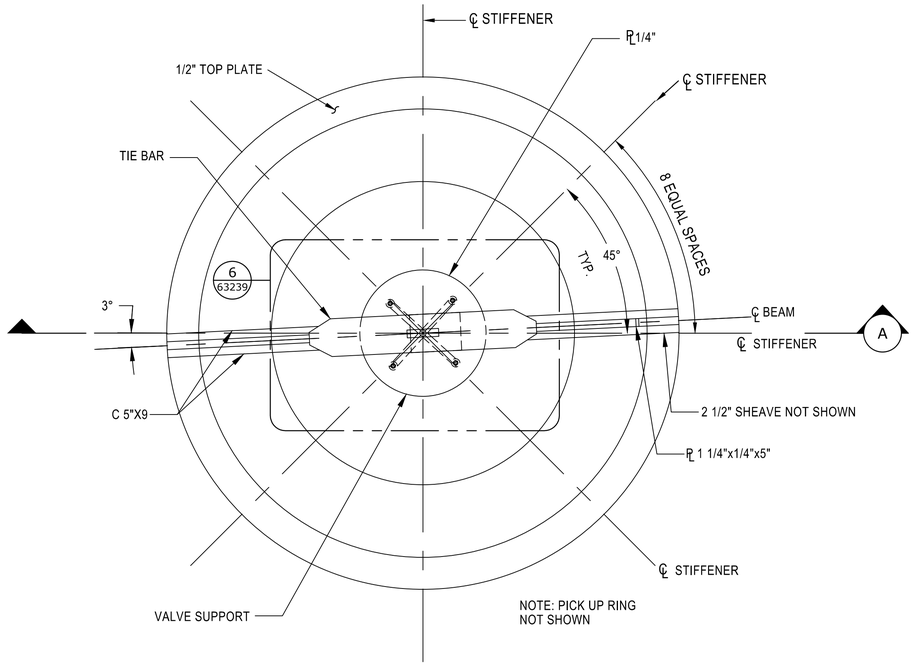

PLAN VIEW
1" = 1'

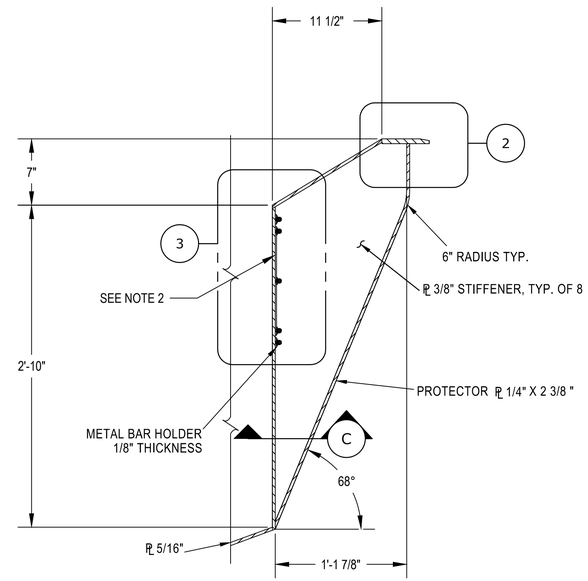

1 STIFFENER DETAIL
1 1/2" = 1'

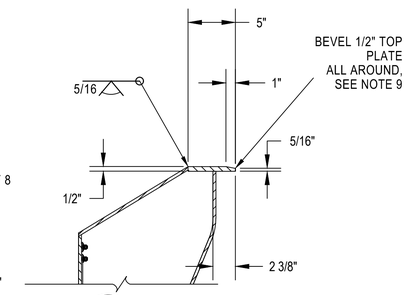

2 TOP PLATE DETAIL
1 1/2" = 1'

NOTES

1. ALL MATERIALS SHALL BE STAINLESS STEEL TYPE 316L UNLESS OTHERWISE STATED.
2. 16 GAUGE PERFORATED PLATE WITH Ø 3/32" HOLE AND 5/32" CENTER TO CENTER.
3. WHEN SIZE OF WELD IS NOT SHOWN USE 3/16" WELD.
4. NOTE NOT USED.
5. MINIMUM YIELD STRENGTH OF 50 ksi FOR C 5"X9.
6. LOCATION AND LENGTH OF SLOT TO BE DETERMINED BY CONTRACTOR. LENGTH SHALL NOT EXCEED 1".
7. ALL SURFACES MUST BE SMOOTH. DEBURR AND BREAK ALL EDGES.
8. TOP PLATE SHALL BE FLAT AND LEVEL ALL AROUND.
9. TOP PLATE NEED NOT BE BEVELED UNDER C 5"X9.
10. STUD WELDED 1/4" X 3/4", DOUBLE NUT AND WASHER , TYP. 3 STUD WELDS PER METAL BAR HOLDER, TO HOLD PERFORATED PLATE IN PLACE.
11. ALL BOLTS, NUTS, AND WASHERS SHALL BE STAINLESS STEEL TYPE 316L.
6. MAIN BODY SHALL BE ONE PIECE WITH CUT OUT SECTIONS FOR THE PERFORATED PLATE.
7. DRAWING DEVELOPED FOR SPECIFICATIONS NO. 20-C0955. SEE DWG 863-208-63240 FOR FULL DRAWING LIST.

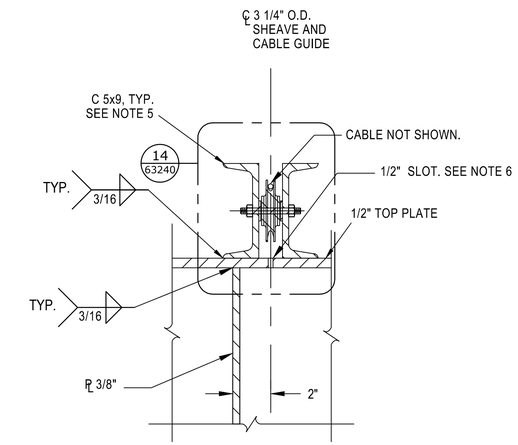

B TOP PLATE SECTION
3" = 1'

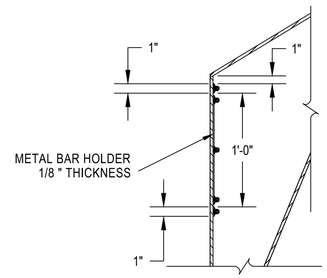

3 PERFORATED METAL PLATE DETAIL
1 1/2" = 1'

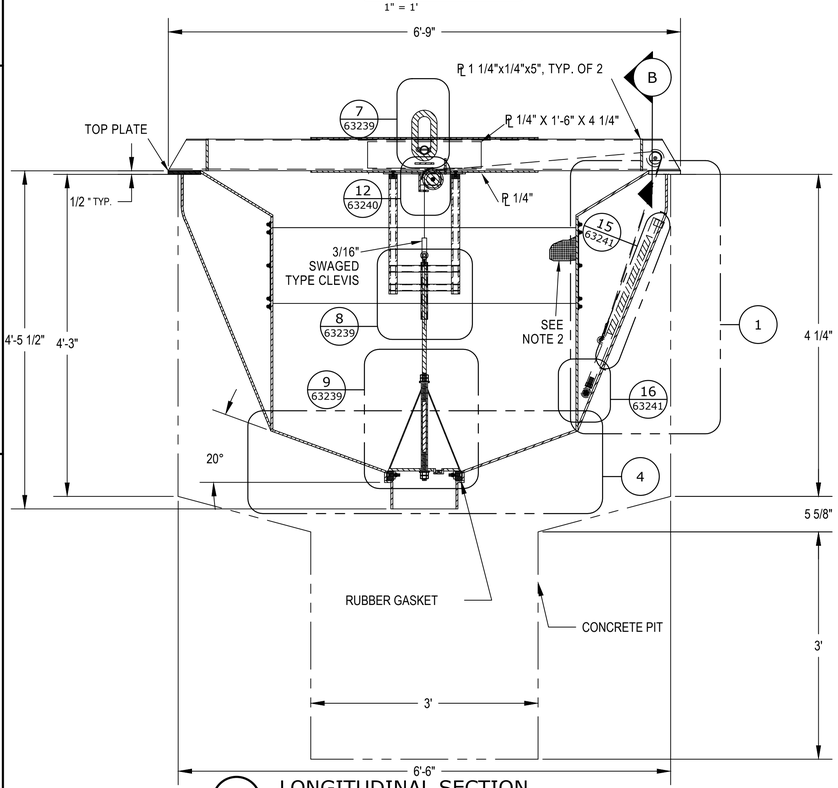

A Llongitudinal section
1" = 1'

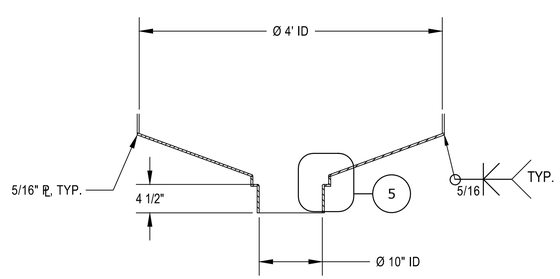

4 FISH BUCKET DRAIN DETAIL
1" = 1'

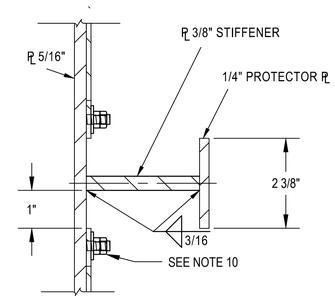

C STIFFENER SECTION
6" = 1'

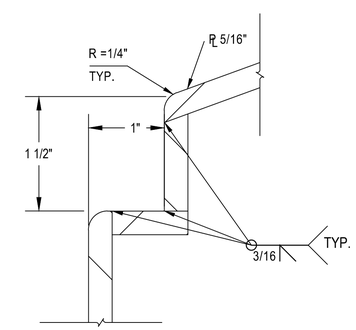

5 GASKET LEDGE
1" = 1"

Released

LAST SAVED DATE
2026-05-26
LAST SAVED BY
AZCHAN

CAD SYSTEM
AutoCAD 2025 (LMS TECH)
CAD FILENAME
863-208-63238-RD-1.DWG

BUREAU OF RECLAMATION

ALWAYS THINK SAFETY

U.S. DEPARTMENT OF THE INTERIOR
BUREAU OF RECLAMATION
CENTRAL VALLEY PROJECT
DELTA DIVISION

TRACY FISH COLLECTING FACILITY

FISH BUCKET

Ali Ziaei
DESIGNED
Andrew Chan
DRAWN
Samuel Garrison-Terry
CHECKED
Ziaei, Ali P.E.
TECH. APPR.
Fender, Joshua L P.E.
APPROVED ME/EE Branch Chief
ADMIN APPROVAL

SACRAMENTO, CA 2026-05-27

FISH COUNTING BUCKET

MAIN BODY

863-208-63238

SHEET

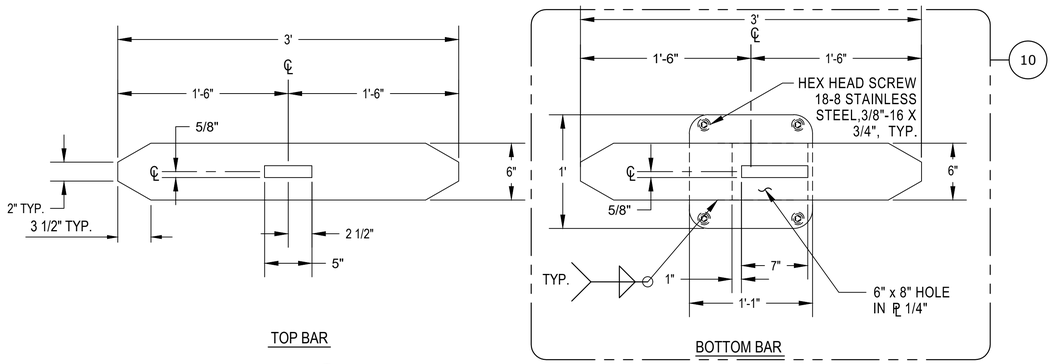

6 / 63238 STEEL TIE BARS DETAIL
1 1/2" = 1'

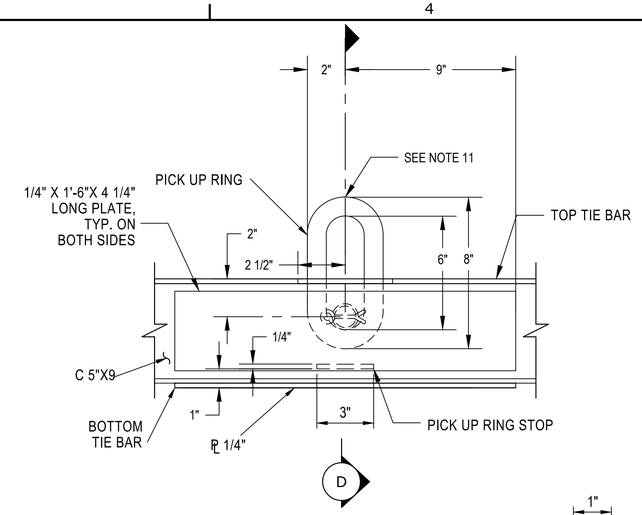

7 / 63238 PICK UP RING DETAIL
3" = 1'

NOTES

1. ALL MATERIALS SHALL BE STAINLESS STEEL TYPE 316L UNLESS OTHERWISE NOTED.
2. ALL WELDS SHALL BE 3/16" UNLESS OTHERWISE SHOWN.
3. 16 GAUGE PERFORATED PLATE WITH Ø 3/32" HOLE AND 5/32" CENTER TO CENTER.
4. MINIMUM YIELD STRENGTH OF 36 ksi FOR C 5"X9.
5. CONE VALVE TO HAVE A MINIMUM WEIGHT OF 35 POUNDS.
4. PLATES SHALL BE FLAT AND LEVEL ALL AROUND.
5. TOP PLATE NEED NOT BE BEVELED UNDER C 5"X9.
6. 1/4" PLATE TO BE WELDED BELOW BOTTOM STEEL TIE BAR.
7. PILOT HOLE IN RUBBER TO BE SAME SIZE OF RESPECTIVE BOLT SHANK.
8. EIGHT (8) BOLTS WITH WASHER AND NYLOC NUT TO BE EQUALLY SPACED WITH EACH BOLT TIGHTENED TO DEPRESS RUBBER GASKET.
9. PICK UP RING SHALL BE RATED FOR AT LEAST 8,000 lbs.
10. ALL BOLTS, NUTS, AND WASHERS SHALL BE STAINLESS STEEL TYPE 316L.
11. DRAWING DEVELOPED FOR SPECIFICATIONS NO. 20-C0955. SEE DWG 863-208-63240 FOR FULL DRAWING LIST.

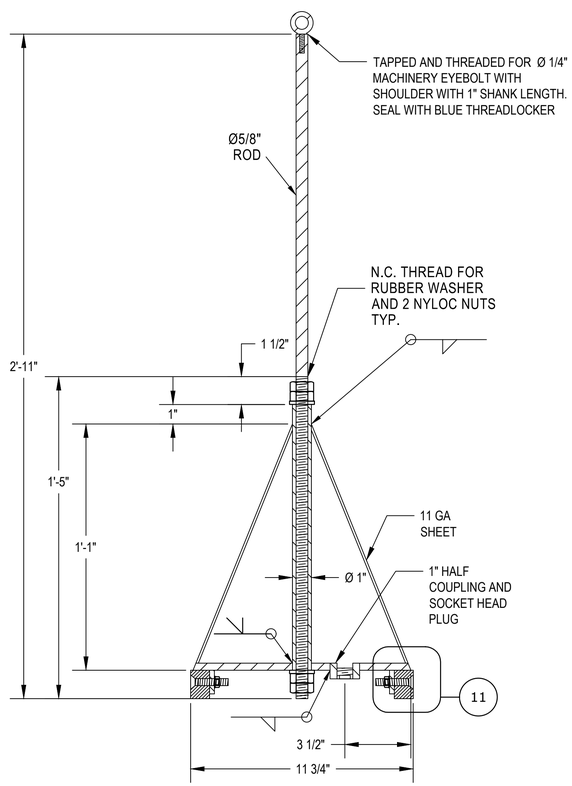

9 / 63238 CONE VALVE AND ROD ASSEMBLY DETAIL
3" = 1'

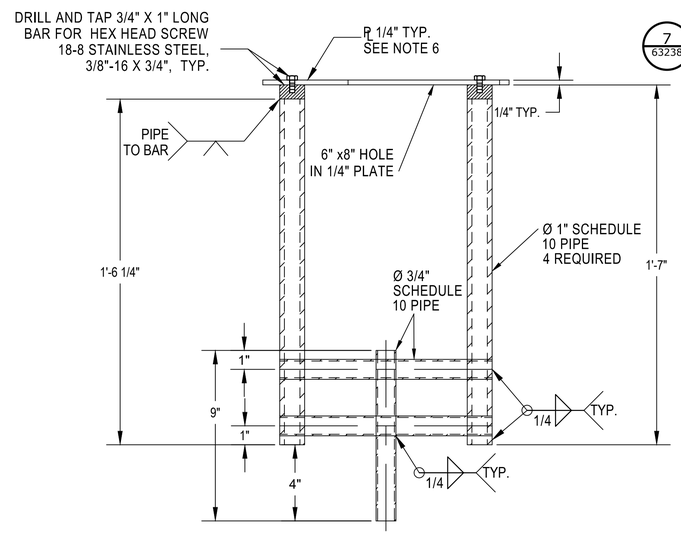

8 / 63238 VALVE SUPPORT DETAIL
3" = 1'

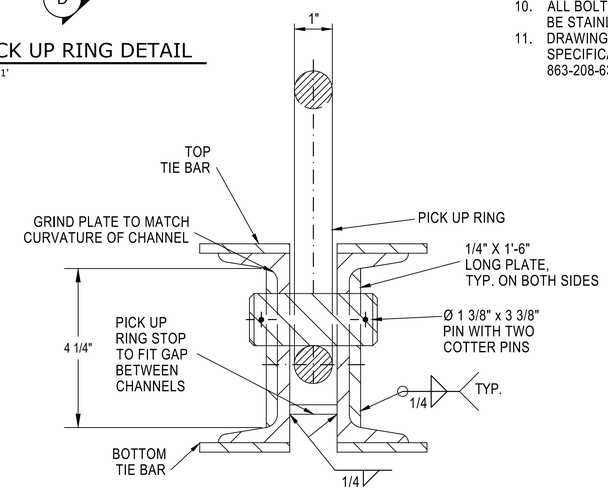

D PICK UP RING SECTION
6" = 1'

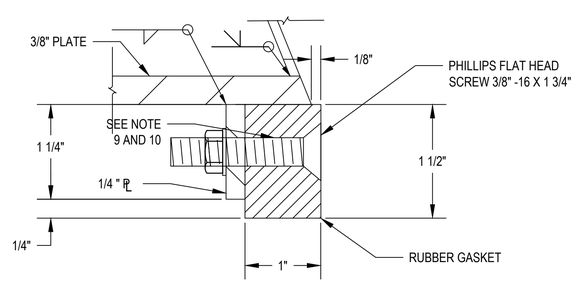

11 / 1" = 1" RUBBER GASKET DETAIL, TYP.

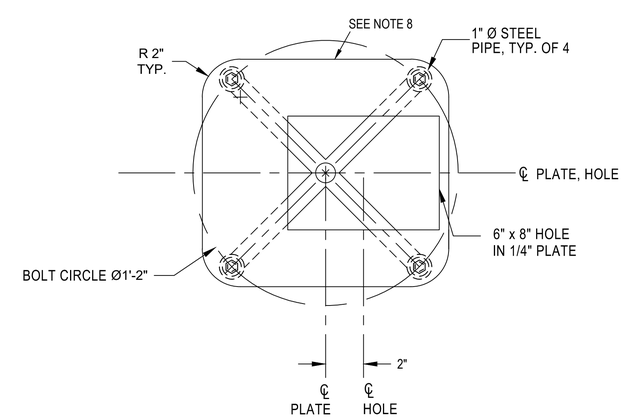

10 / 3" = 1' VALVE SUPPORT PLAN DETAIL

BUREAU OF RECLAMATION

ALWAYS THINK SAFETY

U.S. DEPARTMENT OF THE INTERIOR
BUREAU OF RECLAMATION
CENTRAL VALLEY PROJECT
DELTA DIVISION

TRACY FISH COLLECTING FACILITY

FISH BUCKET

Ali Ziaei
DESIGNED
Andrew Chan
DRAWN
Samuel Garrison-Terry
CHECKED
Ziaei, Ali P.E.
TECH. APPR.
Fender, Joshua L P.E.
APPROVED ME/EE Branch Chief
ADMIN APPROVAL
SACRAMENTO, CA 2026-05-27

FISH COUNTING BUCKET

WIRE MECHANISM

863-208-63239
SHEET

Released

LAST SAVED DATE 2026-05-27
LAST SAVED BY AZCHAN

CAD SYSTEM AutoCAD LT 2025 (LMS TECH)
CAD FILENAME 863-208-63239-RD-1.DWG

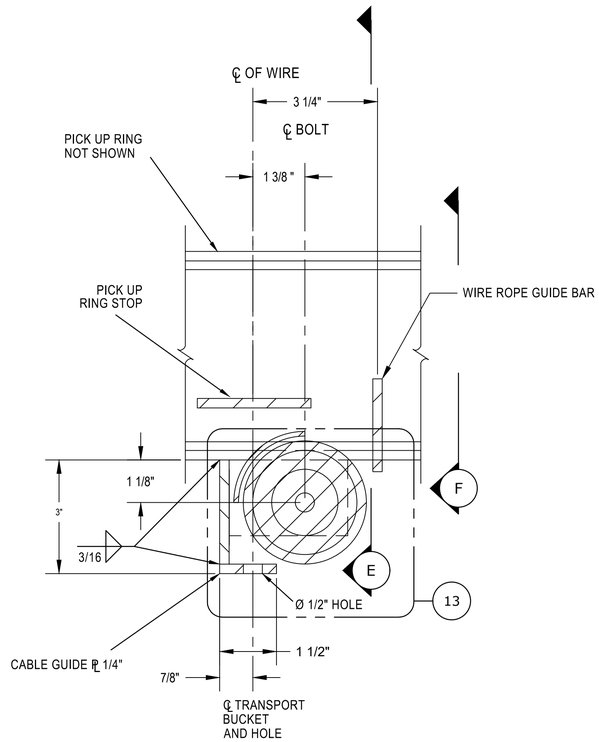

12 / 63238 WIRE MECHANISM DETAIL
6" = 1'

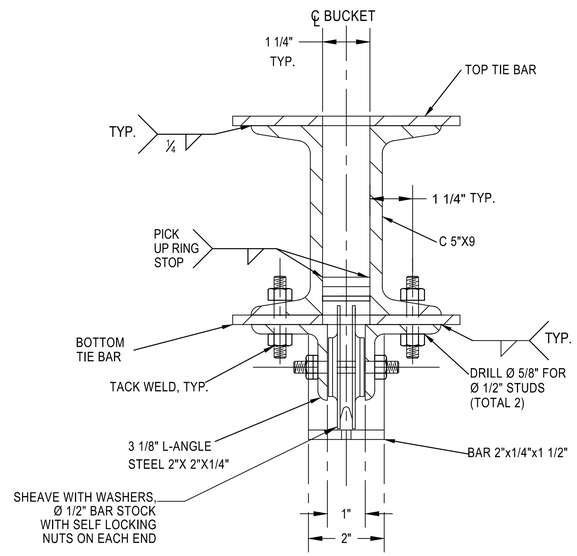

E WIRE MECHANISM SECTION
6" = 1'

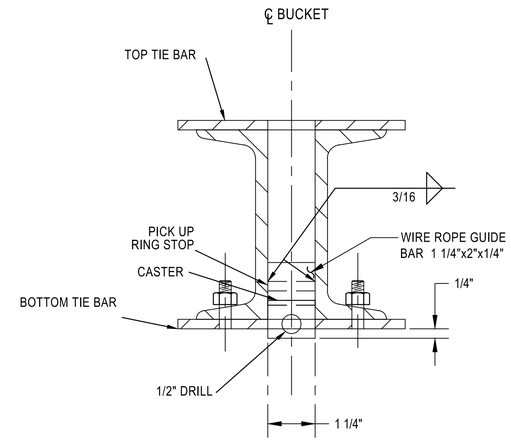

F WIRE ROPE GUIDE BAR SECTION
6" = 1'

NOTES

1. ALL MATERIALS SHALL BE STAINLESS STEEL TYPE 316L UNLESS OTHERWISE STATED.
2. ALL WELDS SHALL BE 3/16" UNLESS OTHERWISE SHOWN.
3. 16 GAUGE PERFORATED PLATE WITH 3/32" Ø HOLE AND 5/32" CENTER TO CENTER
4. TACK WELD 1 1/16" O.D. S.S. F436 CIRCULAR WASHER ON C 5"X9 TO PREVENT EXCESSIVE LATERAL MOVEMENT OF SHEAVE. ENSURE 1/16" GAP BETWEEN SHEAVE AND WASHER.
5. 1/8" THICK CURVED METAL PLATE OVER SHEAVE TO PREVENT WIRE ROPE FROM JUMPING SHEAVE. WELD PLATE ONLY ON ONE L 2" X 2" X 1/4".
6. ALL BOLTS, NUTS,AND WASHERS SHALL BE STAINLESS STEEL TYPE 316L.
7. DRAWING DEVELOPED FOR SPECIFICATIONS NO. 20-C0955.

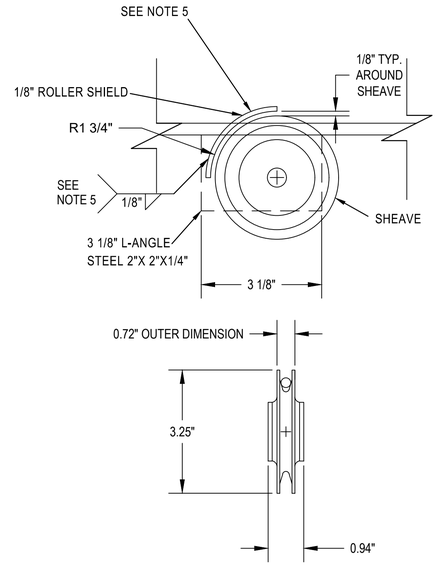

13 / 63238 SHEAVE DETAIL TYP.
6" = 1'

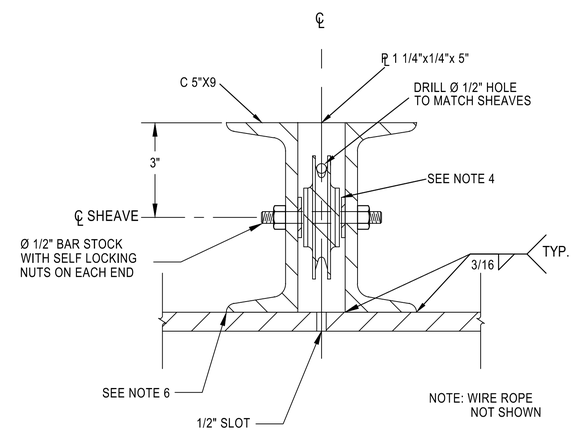

14 / 63238 TOP PLATE WIRE MECHANISM DETAIL
6" = 1'

REFERENCES

863-208-63238	MAIN BODY
863-208-63239	WIRE MECHANISM
863-208-63240	CONE VALVE DETAILS
863-208-63241	LEVER MECHANISM
40-D-7102	SAMPLE TITLE BLOCK

BUREAU OF RECLAMATION

ALWAYS THINK SAFETY

U.S. DEPARTMENT OF THE INTERIOR
BUREAU OF RECLAMATION
CENTRAL VALLEY PROJECT
DELTA DIVISION

TRACY FISH COLLECTING FACILITY

FISH BUCKET

Ali Ziaei
DESIGNED
Andrew Chan
DRAWN
Samuel Garrison-Terry
CHECKED
Ziaei, Ali P.E.
TECH. APPR.
Fender, Joshua L P.E.
APPROVED ME/EE Branch Chief
ADMIN APPROVAL

SACRAMENTO, CA 2026-05-27

FISH COUNTING BUCKET

CONE VALVE DETAILS

863-208-63240
SHEET

Released

LAST SAVED DATE 2026-05-26
LAST SAVED BY AZCHAN

CAD SYSTEM AutoCAD 2025 (LMS TECH)
CAD FILENAME 863-208-63240-RD-1.DWG

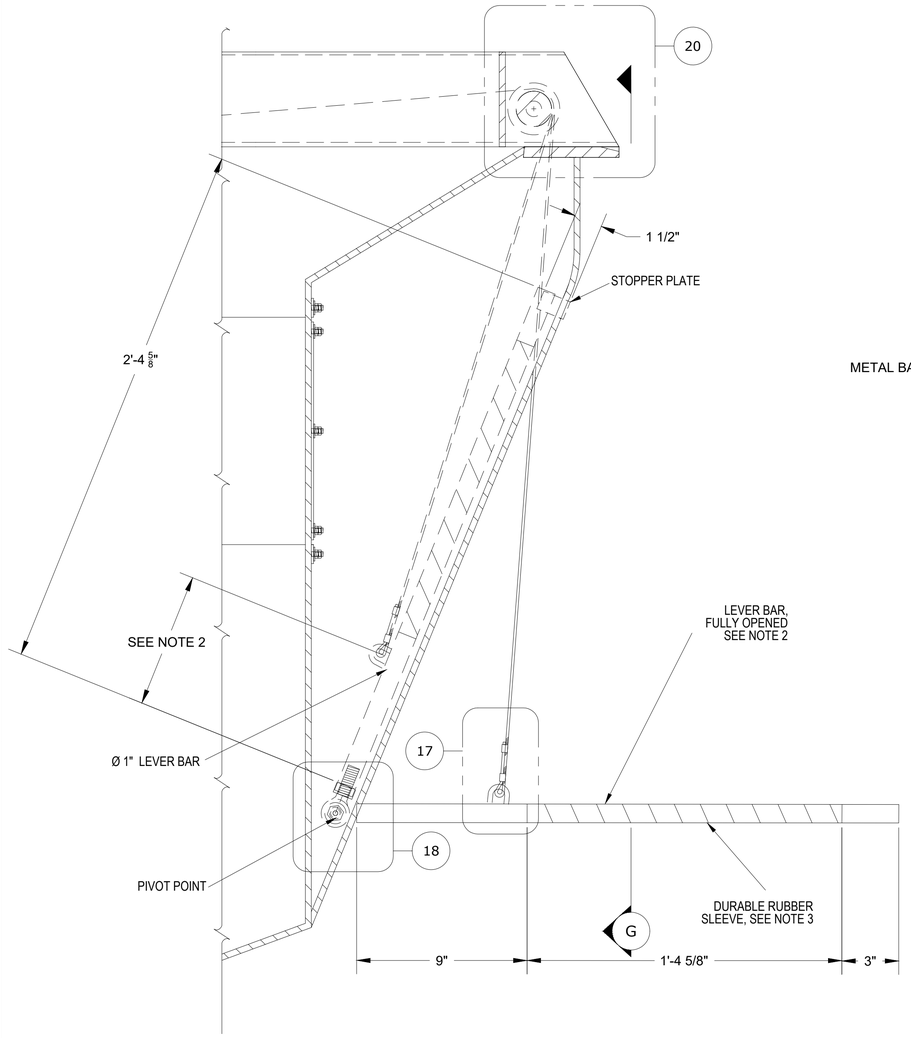

15 63238 LEVER DETAIL
3" = 1'

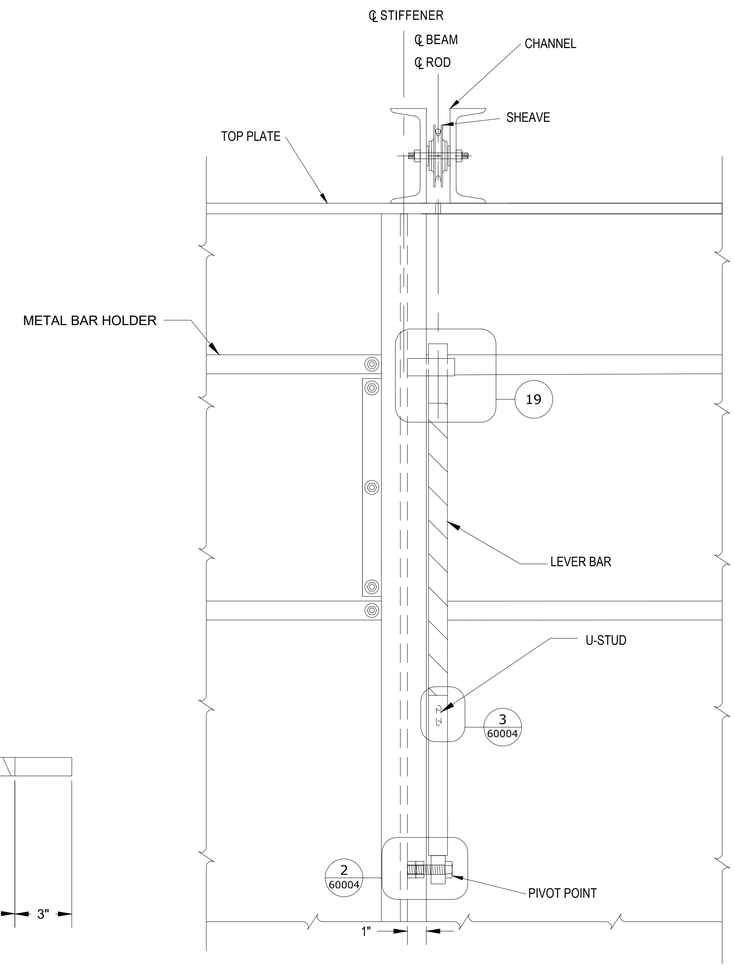

G LEVER ELEVATION SECTION
3" = 1'

NOTES

1. ALL MATERIAL SHALL BE STAINLESS STEEL TYPE 316L UNLESS OTHERWISE NOTED.
2. ADJUST THE POSITION OF U-STUD ACCORDINGLY TO ENSURE THAT THE VALVE IS FULLY LOWERED AND THE WIRE ROPE TAUT. APPROXIMATELY 8 5/8". CONTRACTOR TO VERIFY.
3. LEVER TO BE MINIMUM Ø 1" SOLID ROD WITH DURABLE RUBBER SLEEVE.
4. LEVER BAR TO REST ON STOPPER PLATE WHEN VALVE IS FULLY CLOSED.
5. ALL BOLTS, NUTS,AND WASHERS SHALL BE STAINLESS STEEL TYPE 316L.
6. DRAWING DEVELOPED FOR SPECIFICATIONS NO. 20-C0955. SEE DWG 863-208-63240 FOR FULL DRAWING LIST.

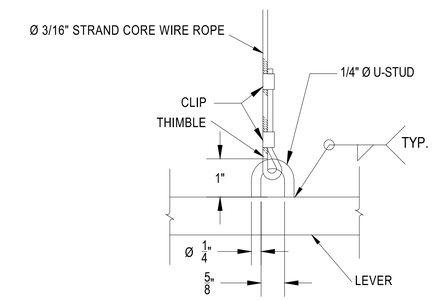

17 U STUD DETAIL
6" = 1'

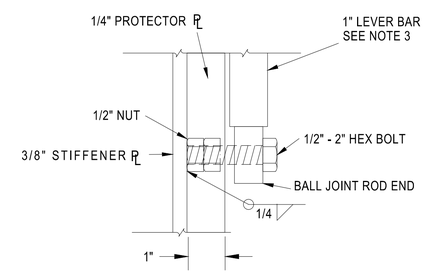

16 63238 LEVER MECHANISM DETAIL
6" = 1'

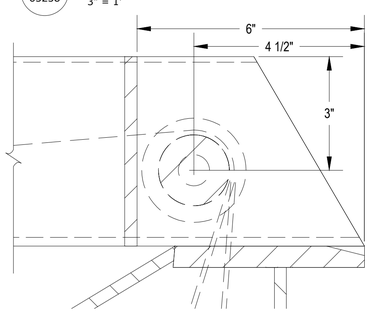

20 LEVER DETAIL
6" = 1'

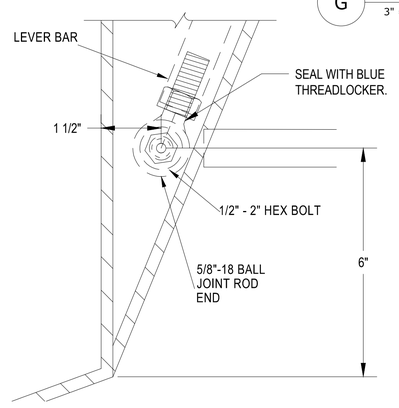

18 ROD END DETAIL
6" = 1'

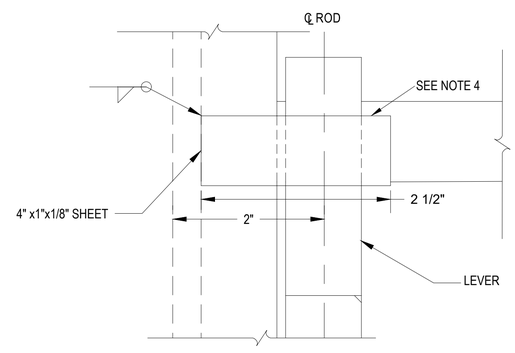

19 STOPPER PLATE DETAIL
1" = 1"

BUREAU OF RECLAMATION

ALWAYS THINK SAFETY

U.S. DEPARTMENT OF THE INTERIOR
BUREAU OF RECLAMATION
CENTRAL VALLEY PROJECT
DELTA DIVISION

TRACY FISH COLLECTING FACILITY

FISH BUCKET

Ali Ziaei
DESIGNED
Andrew Chan
DRAWN
Samuel Garrison-Terry
CHECKED
Ziaei, Ali P.E.
TECH. APPR.
Fender, Joshua L P.E.
APPROVED ME/EE Branch Chief
ADMIN APPROVAL

SACRAMENTO, CA 2026-05-27

FISH COUNTING BUCKET

LEVER MECHANISM

863-208-63241

SHEET

Released

LAST SAVED DATE 2026-05-27
LAST SAVED BY AZCHAN

CAD SYSTEM AutoCAD 2025
CAD FILENAME 863-208-63241-RD-1.DWG

Released

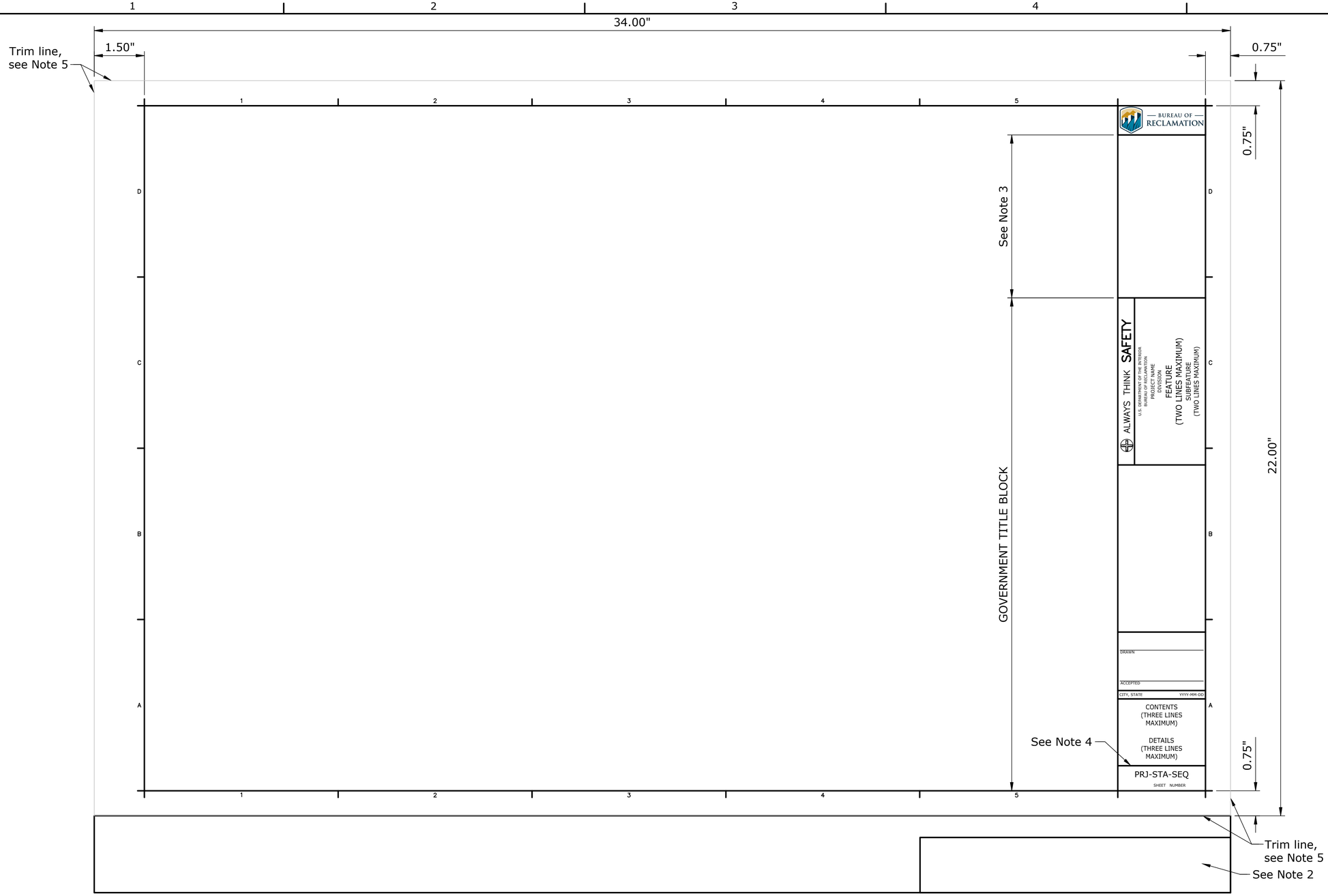

ALWAYS THINK SAFETY

U.S. DEPARTMENT OF THE INTERIOR
BUREAU OF RECLAMATION
YAKIMA PROJECT
KENNEWICK DIVISION

CHANDLER PUMPING PLANT

SWITCHYARD - STEEL STRUCTURES

SAMPLE TITLE

DRAWING BORDER

MANUFACTURER OR CONTRACTOR
DRAWN

ACCEPTED
TITLE

SAMPLE SIGNATURE LINES

REFERENCE

1. Information Management Handbook (IMH - 2020), Chapter 2, Section 9.A.4 - "Sheet Border" and Figures G2, G3, and G4.

NOTES

1. Government will provide contractor with an electronic AutoCAD template to be used by manufacturer for submittal of manufacturer's/contractors drawing in Government format.
2. The manufacturer's title block and drawing revisions as a result of the submittal process, may be located anywhere outside of the trim lines. The location shown on this drawing is the Government's preferred area.
3. The manufacturer shall show the Government solicitation/specification number, the manufacturer's name, drawing and sheet number in this area.
4. Government drawing number(s) will be issued at the end of the submittal process and drawing will be entered into the Government's electronic drawing system by the Government.
5. Trim lines shall be shown on all submitted drawings.

BUREAU OF RECLAMATION

ALWAYS THINK SAFETY

U.S. DEPARTMENT OF THE INTERIOR
BUREAU OF RECLAMATION
STANDARD DRAWINGS

STANDARD AND TYPICAL DESIGNS

GOVERNMENT DRAWING FORMAT

REV NO			
3	2023-04-20 Barthel, Rodney J P.E.	D	UPDATED DRAWING TO CURRENT DRAWING RECORDS SYSTEM. MINOR REVISIONS.
2	2015-03-25 Barthel, Rodney J P.E.	D	UPDATED TITLE BLOCK AND SIGNATURE LINES.
1	2014-12-17 E. Mendlin	D	UPDATED TITLE BLOCK AND SIGNATURE LINES.

S. NITTA
DESIGNED
S. NITTA
DRAWN
D. CRAWFORD
CHECKED
R. BARTHEL, P.E.
TECH. APPR.
R.W. LAFOND, P.E.
APPROVED
ADMIN APPROVAL -

DENVER, CO

DRAWING BORDER, SAMPLE TITLE BLOCK, AND SIGNATURE LINES

40-D-7102

SHEET 1