01/09/2026
Certified Final

Repair & Maintain Airfield Stormwater System Phase II

Dobbin Air Reserve Base, GA
USACE Louisville District
Project #:FGWB 21-0002 A/B P2#: 470584
FY2026

STATE OF GEORGIA
NO SCALE

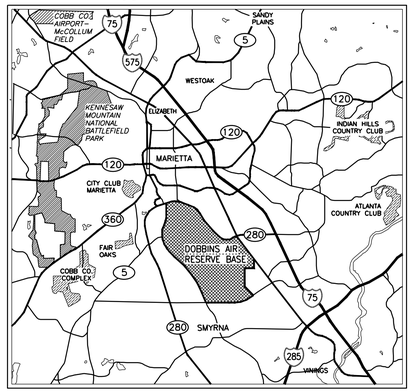

VICINITY MAP
NO SCALE

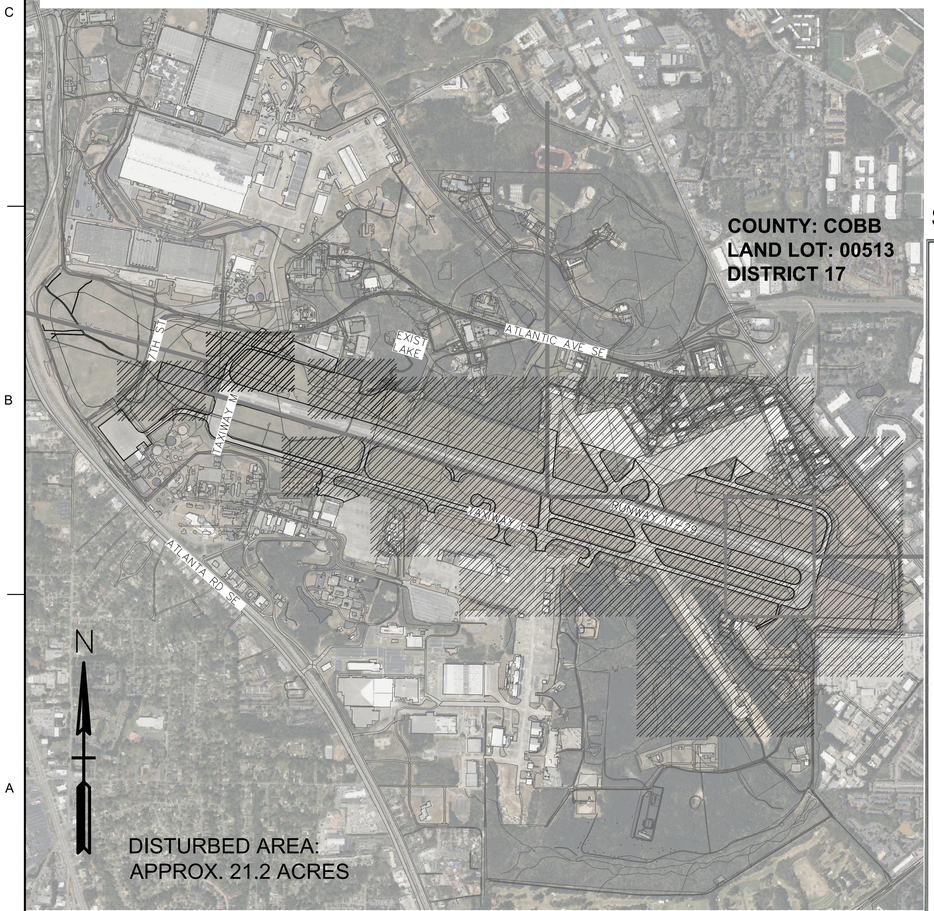

24 HR. EROSION CONTROL CONTACT TO BE DETERMINED WITH SELECTION OF CONTRACTOR

PROJECT LOCATION MAP
SCALE: N.T.S.

SITE PLAN PROJECT NUMBER: SPR-2025-00264

APPROVAL STAMPS

COORDINATION OFFICE/DATE	
94 MSG/CE	94 MSG/CEC
MISSION SUPPORT GROUP COMMANDER	BIO–ENVIRONMENTAL ENGINEER
CHIEF ENGINEERING FLIGHT	BASE CIVIL ENGINEER
COMMUNICATIONS	USING AGENCY
SAFETY OFFICER	ENVIRONMENTAL COORDINATOR
SECURITY POLICE	CHIEF, DESIGN & CONSTRUCTION
FIRE CHIEF	CHIEF OF OPERATIONS

US Army Corps of Engineers®
Louisville District

TANYA NORMAN, P.E.
P.E. No. 0038055, GA
REGISTERED No. PE038055 PROFESSIONAL ENGINEER GEORGIA TANYA L. NORMAN
DATE: 01/09/2026

MARK	DESCRIPTION	DATE

DESIGNED BY: T. NORMAN
DRAWN BY: J.P. ARISTIZABAL
CHECKED BY: D.M. LECKIE
SUBMITTED BY: A. DUERR
SIZE: ANSI D
ISSUE DATE: JANUARY 9, 2026
SOLICITATION NO.:
CONTRACT NO.:
FILE NUMBER: 1230218
FILE NAME: G-001.dwg

U.S. ARMY CORPS OF ENGINEERS
LOUISVILLE DISTRICT
LOUISVILLE, KENTUCKY 40210-0059

POND
POND
101 SUGAWAY LANE
SUITE 500
ROSWELL, GEORGIA 30092
PHONE (678) 336-2749
C.O.A. NO. LCE 3579

REPAIR & MAINTAIN AIRFIELD STORMWATER SYSTEM PHASE II
DOBBINS AIR RESERVE BASE, GEORGIA
PROJECT NO.: FGWB 21-0002 & FGWB 25-0006
P2#: 470584

COVER SHEET

SHEET ID
G-001

FILE PATH: X:\FY23\123021804 CAD BIM\04.02.CAD_PH 2 SHEETS\G-001 PLOTTED: 01/09/2026 BY: NORMAN, TANYA

CERTIFIED FINAL

Sheet List Table

Sheet Number	Sheet Title
G-001	COVER SHEET
G-002	SHEET INDEX
G-003	CONSTRUCTION HAUL ROUTE AND CONTRACTOR LAYDOWN AREAS
C-001	CIVIL ABBREVIATIONS AND LEGEND
C-002	CIVIL GENERAL NOTES
C-100	OVERALL STORM DRAINAGE PLAN
C-101	STORM DRAINAGE PLAN
C-102	STORM DRAINAGE PLAN
C-103	STORM DRAINAGE PLAN
C-104	STORM DRAINAGE PLAN
C-105	STORM DRAINAGE PLAN
C-106	STORM DRAINAGE PLAN
C-107	STORM DRAINAGE PLAN
C-108	STORM DRAINAGE PLAN
C-109	STORM DRAINAGE PLAN
C-110	STORM DRAINAGE PLAN
C-111	STORM DRAINAGE PLAN
C-112	STORM DRAINAGE PLAN
C-113	STORM DRAINAGE PLAN
C-114	STORM DRAINAGE PLAN
C-115	STORM DRAINAGE PLAN
C-116	STORM DRAINAGE PLAN
C-117	STORM DRAINAGE PLAN
C-118	STORM DRAINAGE PLAN
C-119	STORM DRAINAGE PLAN
C-120	STORM DRAINAGE PLAN
C-121	STORM DRAINAGE PLAN
C-122	STORM DRAINAGE PLAN
C-123	STORM DRAINAGE PLAN
C-124	STORM DRAINAGE PLAN
C-125	STORM DRAINAGE PLAN
C-126	STORM DRAINAGE PLAN
C-127	STORM DRAINAGE PLAN
C-128	STORM DRAINAGE PLAN
C-129	STORM DRAINAGE PLAN
C-130	STORM DRAINAGE PLAN
C-131	STORM DRAINAGE PLAN
C-201	STORM DRAINAGE PROFILES
C-202	STORM DRAINAGE PROFILES
C-203	STORM DRAINAGE PROFILES
C-204	STORM DRAINAGE PROFILES
C-401	ENLARGED STORM DRAINAGE PLAN
C-402	ENLARGED STORM DRAINAGE PLAN
C-403	ENLARGED STORM DRAINAGE PLAN
C-501	CONSTRUCTION DETAILS
C-502	CONSTRUCTION DETAILS
C-503	CONSTRUCTION DETAILS
C-504	CONSTRUCTION DETAILS
C-505	CONSTRUCTION DETAILS
C-506	CONSTRUCTION DETAILS
C-507	CONSTRUCTION DETAILS
C-508	CONSTRUCTION DETAILS
C-509	CONSTRUCTION DETAILS
C-510	CONSTRUCTION DETAILS
C-511	CONSTRUCTION DETAILS
C-512	CONSTRUCTION DETAILS
C-513	CONSTRUCTION DETAILS
C-514	CONSTRUCTION DETAILS
C-601	STRUCTURE TABLES
C-602	STRUCTURE TABLES
C-603	STRUCTURE TABLES
C-604	STRUCTURE TABLES
C-605	STRUCTURE TABLES
C-606	STRUCTURE TABLES
CE001	EROSION AND SEDIMENT CONTROL COVER SHEET
CE002	EROSION AND SEDIMENT CONTROL NOTES
CE003	EROSION AND SEDIMENT CONTROL NOTES
CE004	EROSION AND SEDIMENT CONTROL NOTES AND SOILS MAP
CE005	EROSION AND SEDIMENT CONTROL LEGEND
CE006	EROSION AND SEDIMENT CONTROL NOTES AND NARRATIVE
CE007	EROSION AND SEDIMENT CONTROL PLAN
CE008	EROSION AND SEDIMENT CONTROL CHECKLIST
CE101	EROSION AND SEDIMENT CONTROL INITIAL PLAN
CE102	EROSION AND SEDIMENT CONTROL INITIAL PLAN
CE103	EROSION AND SEDIMENT CONTROL INITIAL PLAN
CE104	EROSION AND SEDIMENT CONTROL INITIAL PLAN
CE106	EROSION AND SEDIMENT CONTROL INITIAL PLAN
CE107	EROSION AND SEDIMENT CONTROL INITIAL PLAN
CE108	EROSION AND SEDIMENT CONTROL INITIAL PLAN
CE109	EROSION AND SEDIMENT CONTROL INITIAL PLAN
CE110	EROSION AND SEDIMENT CONTROL INITIAL PLAN
CE111	EROSION AND SEDIMENT CONTROL INITIAL PLAN
CE112	EROSION AND SEDIMENT CONTROL INITIAL PLAN
CE113	EROSION AND SEDIMENT CONTROL INITIAL PLAN
CE114	EROSION AND SEDIMENT CONTROL INITIAL PLAN
CE115	EROSION AND SEDIMENT CONTROL INITIAL PLAN
CE116	EROSION AND SEDIMENT CONTROL INITIAL PLAN
CE117	EROSION AND SEDIMENT CONTROL INITIAL PLAN
CE118	EROSION AND SEDIMENT CONTROL INITIAL PLAN
CE120	EROSION AND SEDIMENT CONTROL INITIAL PLAN
CE121	EROSION AND SEDIMENT CONTROL INITIAL PLAN
CE122	EROSION AND SEDIMENT CONTROL INITIAL PLAN
CE123	EROSION AND SEDIMENT CONTROL INITIAL PLAN
CE125	EROSION AND SEDIMENT CONTROL INITIAL PLAN
CE126	EROSION AND SEDIMENT CONTROL INITIAL PLAN
CE129	EROSION AND SEDIMENT CONTROL INITIAL PLAN
CE130	EROSION AND SEDIMENT CONTROL INITIAL PLAN
CE131	EROSION AND SEDIMENT CONTROL INITIAL PLAN
CE201	EROSION AND SEDIMENT CONTROL INTERMEDIATE PLAN
CE202	EROSION AND SEDIMENT CONTROL INTERMEDIATE PLAN
CE203	EROSION AND SEDIMENT CONTROL INTERMEDIATE PLAN
CE204	EROSION AND SEDIMENT CONTROL INTERMEDIATE PLAN
CE206	EROSION AND SEDIMENT CONTROL INTERMEDIATE PLAN
CE207	EROSION AND SEDIMENT CONTROL INTERMEDIATE PLAN
CE208	EROSION AND SEDIMENT CONTROL INTERMEDIATE PLAN
CE209	EROSION AND SEDIMENT CONTROL INTERMEDIATE PLAN
CE210	EROSION AND SEDIMENT CONTROL INTERMEDIATE PLAN
CE211	EROSION AND SEDIMENT CONTROL INTERMEDIATE PLAN
CE212	EROSION AND SEDIMENT CONTROL INTERMEDIATE PLAN
CE213	EROSION AND SEDIMENT CONTROL INTERMEDIATE PLAN
CE214	EROSION AND SEDIMENT CONTROL INTERMEDIATE PLAN
CE215	EROSION AND SEDIMENT CONTROL INTERMEDIATE PLAN
CE216	EROSION AND SEDIMENT CONTROL INTERMEDIATE PLAN
CE217	EROSION AND SEDIMENT CONTROL INTERMEDIATE PLAN
CE218	EROSION AND SEDIMENT CONTROL INTERMEDIATE PLAN
CE220	EROSION AND SEDIMENT CONTROL INTERMEDIATE PLAN
CE221	EROSION AND SEDIMENT CONTROL INTERMEDIATE PLAN
CE222	EROSION AND SEDIMENT CONTROL INTERMEDIATE PLAN
CE223	EROSION AND SEDIMENT CONTROL INTERMEDIATE PLAN
CE225	EROSION AND SEDIMENT CONTROL INTERMEDIATE PLAN
CE226	EROSION AND SEDIMENT CONTROL INTERMEDIATE PLAN
CE229	EROSION AND SEDIMENT CONTROL INTERMEDIATE PLAN
CE230	EROSION AND SEDIMENT CONTROL INTERMEDIATE PLAN
CE231	EROSION AND SEDIMENT CONTROL INTERMEDIATE PLAN
CE301	EROSION AND SEDIMENT CONTROL FINAL PLAN
CE302	EROSION AND SEDIMENT CONTROL FINAL PLAN
CE303	EROSION AND SEDIMENT CONTROL FINAL PLAN
CE304	EROSION AND SEDIMENT CONTROL FINAL PLAN
CE306	EROSION AND SEDIMENT CONTROL FINAL PLAN
CE307	EROSION AND SEDIMENT CONTROL FINAL PLAN
CE308	EROSION AND SEDIMENT CONTROL FINAL PLAN
CE309	EROSION AND SEDIMENT CONTROL FINAL PLAN
CE310	EROSION AND SEDIMENT CONTROL FINAL PLAN
CE311	EROSION AND SEDIMENT CONTROL FINAL PLAN
CE312	EROSION AND SEDIMENT CONTROL FINAL PLAN
CE313	EROSION AND SEDIMENT CONTROL FINAL PLAN
CE314	EROSION AND SEDIMENT CONTROL FINAL PLAN
CE315	EROSION AND SEDIMENT CONTROL FINAL PLAN
CE316	EROSION AND SEDIMENT CONTROL FINAL PLAN
CE317	EROSION AND SEDIMENT CONTROL FINAL PLAN
CE318	EROSION AND SEDIMENT CONTROL FINAL PLAN
CE320	EROSION AND SEDIMENT CONTROL FINAL PLAN
CE321	EROSION AND SEDIMENT CONTROL FINAL PLAN
CE322	EROSION AND SEDIMENT CONTROL FINAL PLAN
CE323	EROSION AND SEDIMENT CONTROL FINAL PLAN
CE325	EROSION AND SEDIMENT CONTROL FINAL PLAN
CE326	EROSION AND SEDIMENT CONTROL FINAL PLAN
CE329	EROSION AND SEDIMENT CONTROL FINAL PLAN
CE330	EROSION AND SEDIMENT CONTROL FINAL PLAN
CE331	EROSION AND SEDIMENT CONTROL FINAL PLAN
CE401	ENLARGED EROSION AND SEDIMENT CONTROL INITIAL PLAN
CE402	ENLARGED EROSION AND SEDIMENT CONTROL INITIAL PLAN
CE403	ENLARGED EROSION AND SEDIMENT CONTROL FINAL PLAN
CE404	ENLARGED EROSION AND SEDIMENT CONTROL FINAL PLAN
CE405	ENLARGED EROSION AND SEDIMENT CONTROL FINAL PLAN
CE501	EROSION AND SEDIMENT CONTROL DETAILS
CE502	EROSION AND SEDIMENT CONTROL DETAILS
CE503	EROSION AND SEDIMENT CONTROL DETAILS
CE504	EROSION AND SEDIMENT CONTROL DETAILS
S-001	STRUCTURAL GENERAL NOTES
S-002	STRUCTURAL SPECIAL INSPECTIONS
S-301	STRUCTURAL CONDUIT SUPPORT DETAILS
S-302	STRUCTURAL CONDUIT ENCASEMENT DETAILS

US Army Corps of Engineers®
Louisville District

TANYA NORMAN, P.E.
P.E. No. 0038055, GA

GEORGIA REGISTERED No. PE038055 PROFESSIONAL ENGINEER TANYA L. NORMAN

DATE: 01/09/2026

MARK	DESCRIPTION	DATE

DESIGNED BY: T. NORMAN
DRAWN BY: J.P. ARISTIZABAL
CHECKED BY: D.M. LECKIE
SUBMITTED BY: A. DUEHR
SIZE: ANSI D
ISSUE DATE: JANUARY 9, 2026
SOLICITATION NO.:
CONTRACT NO.:
FILE NUMBER: 4230216
FILE NAME: G-001.dwg

U.S. ARMY CORPS OF ENGINEERS
LOUISVILLE DISTRICT
LOUISVILLE, KENTUCKY 40210-0059

POND
3200 TOWER OAKS BLVD., SUITE 500 ROCKVILLE, MD 20852
1447 PEACHTREE STREET, SUITE 700 ATLANTA, GA 30309
PHONE (678) 336-2749
WWW.PONDCO.COM

REPAIR & MAINTAIN AIRFIELD STORMWATER SYSTEM
PHASE II
DOBBINS AIR RESERVE BASE, GEORGIA
PROJECT NO.: FGWB 21-0002 & FGWB 25-0006
P2#: 470584

SHEET INDEX

SHEET ID
G-002

CERTIFIED FINAL

FILE PATH: X:\PY23\123021804\CAD BIM\04.02 CADD_PH 2 SHEETS\G-001 PLOTTED: 01/09/2026 BY: NORMAN, TANYA

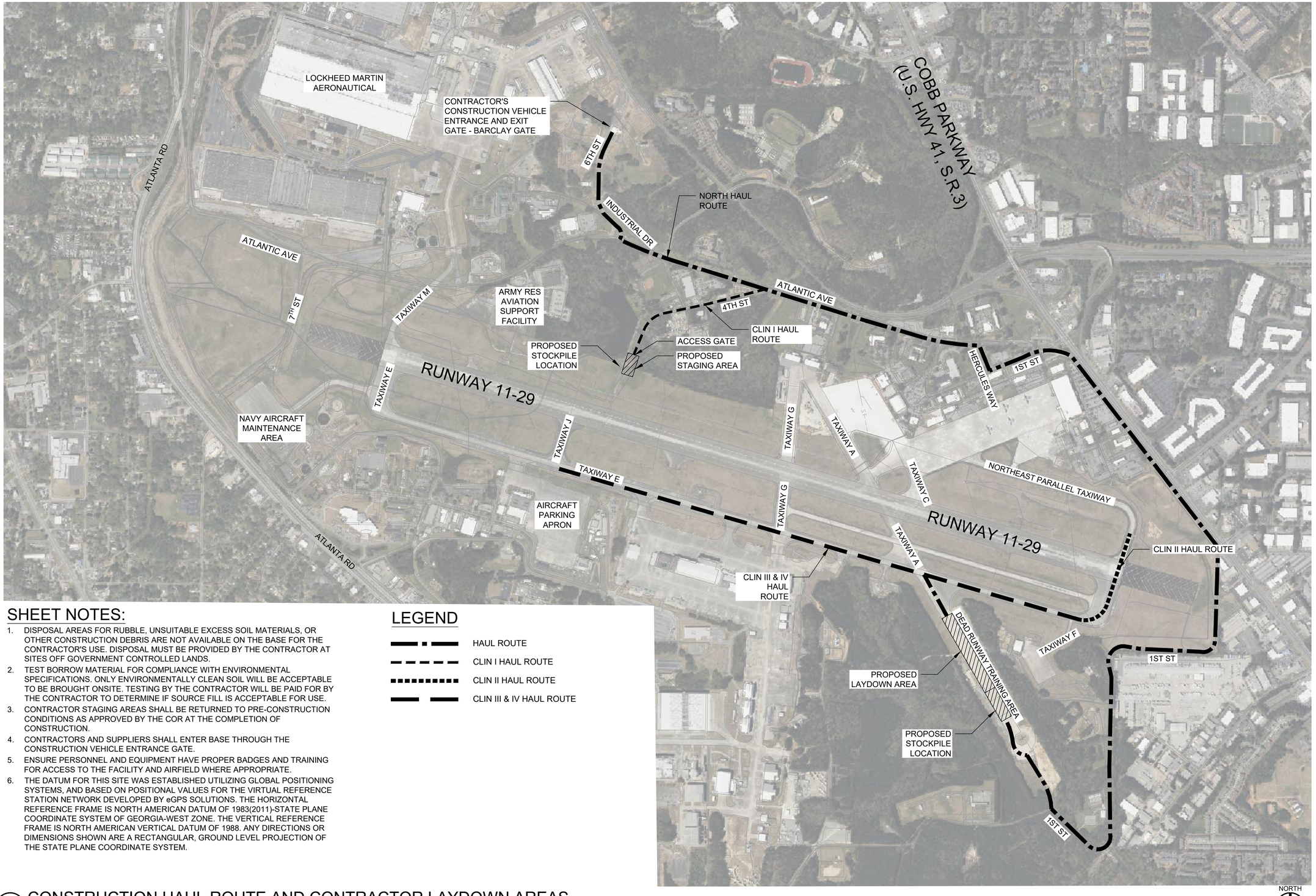

SHEET NOTES:

1. DISPOSAL AREAS FOR RUBBLE, UNSUITABLE EXCESS SOIL MATERIALS, OR OTHER CONSTRUCTION DEBRIS ARE NOT AVAILABLE ON THE BASE FOR THE CONTRACTOR'S USE. DISPOSAL MUST BE PROVIDED BY THE CONTRACTOR AT SITES OFF GOVERNMENT CONTROLLED LANDS.
2. TEST BORROW MATERIAL FOR COMPLIANCE WITH ENVIRONMENTAL SPECIFICATIONS. ONLY ENVIRONMENTALLY CLEAN SOIL WILL BE ACCEPTABLE TO BE BROUGHT ONSITE. TESTING BY THE CONTRACTOR WILL BE PAID FOR BY THE CONTRACTOR TO DETERMINE IF SOURCE FILL IS ACCEPTABLE FOR USE.
3. CONTRACTOR STAGING AREAS SHALL BE RETURNED TO PRE-CONSTRUCTION CONDITIONS AS APPROVED BY THE COR AT THE COMPLETION OF CONSTRUCTION.
4. CONTRACTORS AND SUPPLIERS SHALL ENTER BASE THROUGH THE CONSTRUCTION VEHICLE ENTRANCE GATE.
5. ENSURE PERSONNEL AND EQUIPMENT HAVE PROPER BADGES AND TRAINING FOR ACCESS TO THE FACILITY AND AIRFIELD WHERE APPROPRIATE.
6. THE DATUM FOR THIS SITE WAS ESTABLISHED UTILIZING GLOBAL POSITIONING SYSTEMS, AND BASED ON POSITIONAL VALUES FOR THE VIRTUAL REFERENCE STATION NETWORK DEVELOPED BY eGPS SOLUTIONS. THE HORIZONTAL REFERENCE FRAME IS NORTH AMERICAN DATUM OF 1983(2011)-STATE PLANE COORDINATE SYSTEM OF GEORGIA-WEST ZONE. THE VERTICAL REFERENCE FRAME IS NORTH AMERICAN VERTICAL DATUM OF 1988. ANY DIRECTIONS OR DIMENSIONS SHOWN ARE A RECTANGULAR, GROUND LEVEL PROJECTION OF THE STATE PLANE COORDINATE SYSTEM.

LEGEND

- HAUL ROUTE
- CLIN I HAUL ROUTE
- CLIN II HAUL ROUTE
- CLIN III & IV HAUL ROUTE

A1 CONSTRUCTION HAUL ROUTE AND CONTRACTOR LAYDOWN AREAS

SCALE: 1" = 50'

FILE PATH: X:\PY23\123021804\.CAD BIM\04.02.CAD_PH 2 SHEETS\G-001 PLOTTED: 01/09/2026 BY: NORMAN, TANYA

US Army Corps of Engineers®
Louisville District

TANYA NORMAN, P.E.
P.E. No. 0038055, GA

GEORGIA REGISTERED No. PE038055 PROFESSIONAL ENGINEER TANYA L. NORMAN

DATE: 01/09/2026

MARK	DESCRIPTION	DATE

DESIGNED BY: T. NORMAN
DRAWN BY: J.P. ARISTIZABAL
CHECKED BY: D.M. LECKIE
SUBMITTED BY: A. DUERR
SIZE: ANSI D
ISSUE DATE: JANUARY 9, 2026
SOLICITATION NO.:
CONTRACT NO.:
FILE NUMBER: 423021B
FILE NAME: G-001.dwg

U.S. ARMY CORPS OF ENGINEERS
LOUISVILLE DISTRICT
LOUISVILLE, KENTUCKY 40210-0059

POND
3600 NEW HWY LANE
SUITE 300
NEWNAN, GEORGIA 30265
PHONE (678) 336-2749
POND.COM

REPAIR & MAINTAIN AIRFIELD STORMWATER SYSTEM
PHASE II
DOBBINS AIR RESERVE BASE, GEORGIA
PROJECT NO.: FGWB 21-0002 & FGWB 25-0006
P2#: 470584

CONSTRUCTION HAUL ROUTE AND CONTRACTOR LAYDOWN AREAS

SHEET ID
G-003

CERTIFIED FINAL

NOTE:

1. NOT ALL ABBREVIATIONS SHOWN WILL BE USED ON THIS PROJECT.

SHEET NAMING CONVENTION

C-001

- 2 DIGIT DISCIPLINE DESIGNATOR (IF ONLY ONE LETTER IS USED, THE SECOND LETTER IS REPLACED WITH A DASH "-" AS A PLACEHOLDER)**
- 1 DIGIT SHEET TYPE DESIGNATOR
  - 0 - GENERAL
  - 1 - PLANS
  - 2 - PROFILES
  - 3 - SECTIONS
  - 4 - ENLARGED PLANS
  - 5 - DETAILS
  - 6 - SCHEDULES AND DIAGRAMS
  - 7 - USER DEFINED
  - 8 - USER DEFINED
  - 9 - 3D VIEWS (ISO, PERSPECTIVES, PHOTOS)
- 2 DIGIT SEQUENTIAL # (01-99) (FIRST DIGIT INDICATES PLAN TYPE. SECOND DIGIT INDICATES FLOOR)

PROJECT CONTACTS:

CIVIL ENGINEER FOR THIS PROJECT IS:
POND AND COMPANY
3500 PARKWAY LANE, SUITE 500
PEACHTREE CORNERS, GA 30092
P: (470) 494.1466
CONTACT: TANYA NORMAN, P.E.

SURVEYOR FOR THIS PROJECT IS:
GEO SURVEY, LTD.
1660 BARNES MILL ROAD
MARIETTA, GA 30062
P: (770) 795. 9900

CIVIL ABBREVIATIONS

@	AT
&	AND
Ø	DIAMETER
APPR	APPROVED
APPROX	APPROXIMATELY
ARV	AIR RELEASE VALVE
AW	AIR WING
BLDG	BUILDING
BM	BENCHMARK
BOT	BOTTOM
℄	CENTERLINE
CES	CIVIL ENGINEERING SQUADRON
CF	CUBIC FEET
CL	CONSTRUCTION LIMITS
CLIN	CONTRACT LINE ITEM NUMBER
CO	CLEANOUT
CONC	CONCRETE
COR	CONTRACTING OFFICER'S REPRESENTATIVE
CPP	CORRUGATED PLASTIC PIPE
DARB	DOBBINS AIR RESERVE BASE
DI	DROP INLET
DIA	DIAMETER
DB	DUCTBANK
DIP	DUCTILE IRON PIPE
DS	DOWNSPOUT
E	EASTING
EG	EXISTING GRADE
ELEC	ELECTRICAL
ELEV	ELEVATION
EP	EDGE OF PAVEMENT
ESMT	EASEMENT
EX	EXISTING
FDC	FIRE DEPARTMENT CONNECTION
FFE	FINISHED FLOOR ELEVATION
FG	FINISHED GRADE
FES	FLARED END SECTION
FH	FIRE HYDRANT
FT	FEET
GI	GRATE INLET
GIS	GEOGRAPHIC INFORMATION SYSTEM
GSWCC	GEORGIA SOIL & WATER CONSERVATION COMMISSION
HDPE	HIGH DENSITY POLYETHYLENE PIPE
HORZ	HORIZONTAL
HT	HEIGHT
HW	HEADWALL
IBW	INSIDE BOTTOM OF WALL
ID	INSIDE DIAMETER
IE	INVERT ELEVATION
ILS	INSTRUMENT LANDING SYSTEM
INC	INCORPORATED
INV	INVERT
JB	JUNCTION BOX
LF	LINEAR FEET
LOD	LIMITS OF DISTURBANCE
MAX	MAXIMUM
M.E.	MATCH ELEVATION
MECH	MECHANICAL
MEG	MATCH EXISTING GRADE
MES	MITERED END SECTION
MH	MANHOLE
MIN	MINIMUM
N	NORTHING
NO	NUMBER
NTS	NOT TO SCALE
OC	ON CENTER
OCEW	ON CENTER EACH WAY
OD	OUTSIDE DIAMETER
PIV	POST INDICTOR VALVE
PROP	PROPOSED
PSF	POUNDS PER SQUARE FOOT
PSI	POUNDS PER SQUARE INCH
PVC	POLYVINYL CHLORIDE
RCP	REINFORCED CONCRETE PIPE
R/W	RIGHT OF WAY
SD	STORM DRAIN
SEG	SEGMENT
SF	SQUARE FEET
SPEC	SPECIFICATIONS
SQ	SQUARE
SS	SANITARY SEWER
SSMH	SANITARY SEWER MANHOLE
ST	STORM SEWER
STD	STANDARD
TYP	TYPICAL
UNO/UON	UNLESS NOTED OTHERWISE
UP	UTILITY POLE
USACE	UNITED STATES ARMY CORPS OF ENGINEERS
USAF	UNITED STATES AIR FORCE
VERT	VERTICAL
WM	WATER METER
WV	WATER VALVE
WWF	WELDED WIRE FABRIC
W/	WITH
W/C	WATER TO CEMENT
YI	YARD INLET

EXISTING CONDITIONS LEGEND

- 1006 — EXISTING MINOR CONTOUR
- 1006 — EXISTING MAJOR CONTOUR
- CHAINLINK FENCE
- EXISTING STORM PIPE
- 990.8 — EXISTING SPOT ELEVATION
- EXISTING DROP INLET
- ST — STORM MANHOLE
- FIRE HYDRANT
- S — SANITARY SEWER
- HEADWALL
- T — TELEPHONE MANHOLE
- BOLLARD
- COMPUTED POINT
- CLF — CHAIN LINK FENCE
- LIGHT POLE
- GUY WIRE
- POWER POLE
- T — TELEPHONE BOX
- SIGN
- AIRFIELD LIGHTING
- ILS CHECKPOINT
- STORM SEWER STRUCTURES
- MW — MONITORING WELL
- UC — UC — EXISTING UNDERGROUND COMM
- SS — SS — EXISTING SANITARY SEWER LINE
- W — W — EXISTING WATER LINE
- G — G — EXISTING NATURAL GAS LINE
- EXISTING FENCE LINE
- EXISTING FLOW LINE OF CONCRETE FLUME
- CM — CM — EXISTING COMMUNICATION LINE
- FM — FM — EXISTING FORCE MAIN LINE
- E — E — EXISTING UNDERGROUND ELEC
- A — A — EXISTING UNDERGROUND COMPRESSED AIR LINE
- IW — IW — EXISTING UNDERGROUND INDUSTRIAL WASTE LINE
- ST — ST — EXISTING STORM DRAINAGE
- FO — FO — EXISTING FIBER OPTIC
- EXISTING WETLANDS
- STREAM DELINEATION TOP OF BANK
- LOCKHEED PROPERTY BOUNDARY
- TAXIWAY CENTERLINE MARKINGS
- TAXIWAY EDGE MARKINGS
- NON-MOVEMENT AREA BOUNDARY MARKING
- EXISTING CONCRETE PAVEMENT

DEMOLITION LEGEND

- STORM LINE TO BE ABANDONED IN PLACE
- STORM LINE TO BE DEMOLISHED AND REMOVED

GRADING & DRAINAGE LEGEND

- CURED-IN-PLACE PIPE LINER STORM PIPE
- REMOVE AND REPLACE STORM PIPE
- NEW STORM PIPE
- EXISTING STORM PIPE
- JACK AND BORE
- SOD REPLACEMENT
- EXISTING ASPHALT PAVEMENT
- PAVEMENT RESTORATION
- JURISDICTIONAL WATERWAY
- NEW OR MODIFIED EXISTING STORM SEWER STRUCTURES
- STORM MANHOLE
- HEADWALL
- EXISTING FEATURES ARE SCREENED
- RIP RAP
- REMOVE GRAVEL/ REGRADE AND SOD DISTURBED UNPAVED AREAS
- 1006 — PROPOSED INTERMEDIATE CONTOUR
- 1006 — PROPOSED INDEX CONTOUR
- CLIN OPTION
- LOD — LOD — LOD — LIMITS OF DISTURBANCE

US Army Corps of Engineers®
Louisville District

TANYA NORMAN, P.E.
P.E. No. 0038055, GA
GEORGIA REGISTERED No. PE038055 PROFESSIONAL ENGINEER TANYA L. NORMAN

DATE: 01/09/2026

MARK	DESCRIPTION	DATE

DESIGNED BY: T. NORMAN
DRAWN BY: J.P. ARISTIZABAL
CHECKED BY: D.M. LECKIE
SUBMITTED BY: A. DUERR
SIZE: ANSI D
ISSUE DATE: JANUARY 9, 2026
SOLICITATION NO.:
CONTRACT NO.:
FILE NUMBER: 423026
FILE NAME: G-001.dwg

U.S. ARMY CORPS OF ENGINEERS
LOUISVILLE DISTRICT
LOUISVILLE, KENTUCKY 40210-0059

POND
3500 PARKWAY LANE, SUITE 500
PEACHTREE CORNERS, GA 30092
PHONE (470) 494.1466
PHONE (678) 570-2743

REPAIR & MAINTAIN AIRFIELD STORMWATER SYSTEM PHASE II
DOBBINS AIR RESERVE BASE, GEORGIA
PROJECT NO.: FGWB 21-0002 & FGWB 25-0006
P2#: 470584

CIVIL ABBREVIATIONS AND LEGEND

SHEET ID
C-001

FILE PATH: X:\FY23\123021604.CAD BIM\04.02.CAD_PH 2 SHEETS\G-001 PLOTTED: 01/09/2026 BY: NORMAN, TANYA

CERTIFIED FINAL

CIVIL GENERAL NOTES

1. ALL DISTURBED AREAS TO BE ROLLED SODDED WITH BERMUDA SOD (PENNINGTON'S SAHARA OR CHEYENNE) SECURED WITH STAPLES UPON COMPLETION. BROWN TOP MILLET NOT ALLOWED ON OR AROUND AIRFIELD. SOD STAPLES SHALL BE BIODEGRADABLE DESIGNED TO BE SECURE AN RETAIN IN THE SOIL, STAPLES MUST NOT BECOME FOD (FOREIGN OBJECT DEBRIS) AROUND THE AIRFIELD.
2. EXISTING CONDITIONS SHOWN ARE BASED ON BASE PROVIDED INFORMATION, LOCKHEED MARTIN INFORMATION, SELECT FIELD RUN TOPOGRAPHY AND STORM SEWER ELEVATIONS.
3. NOT ALL UTILITIES ARE SHOWN ON THIS PLAN. THE CONTRACTOR SHALL OBTAIN AN UNDERGROUND UTILITY SURVEY ON DOBBINS PROPERTY USING A PRIVATE UTILITY LOCATING SERVICE PRIOR TO START OF CONSTRUCTION. LOCKHEED MARTIN WILL MARK THEIR OWN UTILITIES. THE CONTRACTOR SHALL SURVEY BOTH UTILITY MARKINGS, REVIEW THE SURVEY AGAINST THE PLANS, AND COORDINATE WITH THE CONTRACTING OFFICER.
4. THE CONTRACTOR MUST COMPLETE AND FILE AN AF 103 DIG PERMIT AS REFERENCED IN SPECIFICATION 01 01 00, GENERAL REQUIREMENTS. THE CONTRACTOR MUST ALSO CONTACT THE GEORGIA UTILITIES PROTECTION CENTER AT "811" BEFORE ANY DIGGING AND COORDINATE WITH BASE CE.
5. FIELD RUN TOPOGRAPHY AND STORM SEWER ELEVATIONS WERE PROVIDED BY GEO SURVEY LTD, 1660 BARNES MILL ROAD, MARIETTA, GA 30062. PHONE: 770-795-9900. DATED JULY 17 , 2018.
6. GENERAL EXCAVATION MUST HAVE A MAXIMUM BERM HEIGHT OF 3 FEET. EXTENSIVE EXCAVATION MUST USE ASSIGNED STOCK PILE AREAS. COORDINATE WITH THE CONTRACTING OFFICER FOR ALL PROPOSED TAXIWAY CLOSURES.
7. THE CONTRACTOR MUST COORDINATE ALL WORK WITHIN LOCKHEED MARTIN'S PROPERTY. COORDINATE WITH THE CONTRACTING OFFICER FOR POINT OF CONTACT.
8. WETLAND AND STREAM IDENTIFICATION AND LIMITS SHOWN ON THESE PLANS WERE PROVIDED BY DOBBINS AIR RESERVE BASE PER A JURISDICTIONAL DETERMINATION, 2010.
9. THE CONTRACTOR MUST NOT DISTURB MORE THAN 5 ACRES AT ANY TIME DURING THE CONSTRUCTION PROCESS. ALL DISTURBED AREAS MUST BE FULLY STABILIZED PRIOR TO MOVING TO NEXT CONSTRUCTION AREA. STOCKPILE AREAS SHOWN ON THE PLAN REPRESENT APPROXIMATELY 400 LF OF TRENCH EXCAVATION FOR THE "A" LINE. CONSTRUCTION SHALL BE PHASED IN 400 LF INCREMENTS AND LIMITED TO THE STOCKPILE AREAS AND CONSTRAINTS PROVIDED ON THE PLANS.
10. SECURITY FORCES MUST BE NOTIFIED 2 WEEKS PRIOR TO ANY AUGMENTATION OF THE FENCE LINE.
11. ALL OPEN CUTS/TRENCHING MUST BE GRADED TO THE ORIGINAL GRADES UNLESS SHOWN ON THE PLANS TO BE RE-GRADED.
12. CONTRACTOR MUST PROVIDE FINAL JACKING AND BORING DETAILS TO THE CONTRACTING OFFICER BEFORE CONSTRUCTION. THE PLANS MUST BE IN ACCORDANCE WITH THE CONSTRUCTION PLANS. THE CONTRACTOR MUST TAKE ALL PRECAUTIONS TO AVOID DAMAGE TO THE EXISTING STORM SEWER LINE AND WILL BE RESPONSIBLE FOR ANY DAMAGE TO IT.
13. CONTRACTOR MUST PROVIDE DESIGN AND IMPLEMENTATION OF THE MOST ECONOMICAL METHOD OF EXCAVATION IN THE BASE BID TO INCLUDE OPEN CUT OR OPEN CUT WITH SHORING.
14. CONTRACTOR MUST PROVIDE DESIGN AND IMPLEMENTATION OF DEWATERING METHODS AND INCLUDE IN BASE BID FOR APPROVAL.
15. CONTRACTOR MUST PROVIDE DESIGN AND IMPLEMENTATION OF SHORING AND BRACING AROUND CRITICAL AREAS SUCH AS RUNWAY AND TAXIWAY EDGES AND INCLUDE IN BASE BID FOR APPROVAL.
16. ALL FLOWABLE FILL MUST USE GEOFILL (DESIGN BASIS) LD (LOW DENSITY) CELLULAR CONCRETE OR APPROVED EQUAL. ALL PIPES AND STRUCTURES INDICATED TO BE ABANDONED IN PLACE SHALL BE COMPLETELY FILLED WITH FLOWABLE FILL.
17. ALL SODDED/DISTURBED AREAS TO BE FREE OF DELETERIOUS MATERIAL, SCARIFIED, GRADED AS NEEDED FOR POSITIVE DRAINAGE AND FINE GRADED PER THE SPECIFICATIONS PRIOR TO INSTALLATION.
18. SEE EROSION AND SEDIMENT CONTROL PLANS FOR DESIGNATED STOCKPILE AREAS.
19. ALL SOD BASE MATERIAL (DIRT) MUST BE PLACED AT LEAST ONE INCH BELOW THE EDGE OF ALL PAVEMENT INTERFACES. POSITIVE DRAINAGE FROM PAVED AREAS THROUGH SOD INTERFACE MUST BE OBTAINED. THERE MUST BE NO PONDING AT THE INTERFACE UPON COMPLETION OF WORK.
20. ALL STOCKPILE AREAS MUST HAVE ORANGE TREE PROTECTION FENCE INSTALLED AROUND THEM. ALL STAGING AREAS MUST HAVE BARRICADES WITH LIGHTS AS DESCRIBED IN UFC 3-260-04. ALL VEHICLES MUST BE FLAGGED WITH ORANGE & WHITE FLAG AND LIGHT AT ALL TIMES. CONTRACTOR MUST PLACE NAME ON SIDE OF ALL VEHICLES.
21. ALL PAVEMENT USED BY THE CONTRACTOR MUST BE MAINTAINED AND REPLACED AS NEEDED TO THE SATISFACTION OF THE BASE AT NO ADDITIONAL COST. INSPECTION WITH BASE ENGINEERING IS REQUIRED AT THE END OF EACH SEGMENT OF STORM SEWER CONSTRUCTION.
22. ALL AREAS NOTED FOR PAVEMENT REPLACEMENT MUST HAVE BASE MATERIAL REMOVED FULL DEPTH AND REPLACED AND SUBGRADE COMPACTED AND TESTED IN THE PRESENCE OF A BASE REPRESENTATIVE PRIOR TO PLACEMENT OF NEW MATERIAL.
23. SOILS REMOVED FROM SITE MUST BE DISPOSED OF IN A CONSTRUCTION AND DEMOLITION LANDFILL UNLESS ENVIRONMENTALLY CONTAMINATED. NO MANAGEMENT OF CONTAMINATED SOIL IS ANTICIPATED. IF CONTAMINATED SOIL ENCOUNTERED, THE SITE CONTRACTOR SHALL COORDINATE WITH THE COR.

CIVIL DEMOLITION NOTES

1. "DEMOLISH" MEANS TO REMOVE AN OBJECT IN ITS ENTIRETY. RESTORE GRADES AND SURFACE IMPROVEMENTS TO MATCH EXISTING CONDITIONS OR PER REQUIREMENTS OF WORK, WHICHEVER IS APPLICABLE.
2. EROSION AND SEDIMENT CONTROL MEASURES AND TEMPORARY CONSTRUCTION FENCING MUST BE IN PLACE PRIOR TO COMMENCEMENT OF DEMOLITION WORK.
3. ESTABLISH SURVEY CONTROL NETWORK OUTSIDE LIMITS OF DEMOLITION PRIOR TO COMMENCEMENT OF WORK. THIS WORK MUST BE PERFORMED BY A LICENSED & REGISTERED STATE OF GEORGIA LAND SURVEYOR.
4. DEMOLITION WORK MUST BE COORDINATED WITH THE SCHEDULE, LOGISTICS PLAN (APPROVED BY THE COR), EROSION AND SEDIMENT PLAN PRIOR TO WORK.
5. REMEDIATE AND DISPOSE OF CONTAMINATED SOILS IN THE EVENT THEY ARE ENCOUNTERED DURING CONSTRUCTION. NOTIFY 94 CE IF CONTAMINATED SOILS ARE DISCOVERED. CONTACT 94 CEV AT 678-655-3546.

CIVIL SITE NOTES

1. PROVIDE AND MAINTAIN NECESSARY BARRICADES AROUND THE WORK AND PROVIDE PROTECTION AGAINST WATER DAMAGE AND SOIL EROSION.
2. PAVEMENT MARKINGS, INCLUDING ANY STANDARD HANDICAP SYMBOLS, PARKING STRIPING AND TRAFFIC ARROWS, MUST BE PAINTED ON PAVEMENT AT LOCATIONS SHOWN.

GRADING AND DRAINAGE NOTES

1. POSITIVE DRAINAGE MUST BE MAINTAINED TO PREVENT SATURATION OF EXPOSED SOILS IN CASE OF SUDDEN RAINS, AND FOR FINISHED GRADING. LOCATE EXISTING UTILITIES PRIOR TO ANY EXCAVATION. GRADE DISTURBED AREAS TO ENSURE POSITIVE DRAINAGE AWAY FROM BUILDINGS AND TO DRAINAGE STRUCTURES OR DITCHES. NATURAL FLOW OF SURROUNDING WATERS MUST NOT BE DISTURBED DURING CONSTRUCTION, UNLESS SHOWN OTHERWISE.
2. PROVIDE PERIMETER EROSION AND SEDIMENT CONTROL MEASURES PRIOR TO SITE CLEARING OR EXCAVATION. INSPECT SEDIMENT AND EROSION CONTROL MEASURES DAILY AND DURING PROLONGED PERIODS OF CONTINUOUS RAINFALL EVENTS TO ENSURE THAT CONTROLS ARE FUNCTIONING PROPERLY. DAMAGED CONTROLS MUST BE REPLACED BY THE END OF THE WORKDAY.
3. BACKFILL AND FILL MATERIAL MUST BE FREE OF ORGANIC MATTER AND WASTE.
4. REMOVE SEDIMENT CONTROL FENCING FROM THE SITE PRIOR TO FINAL PROJECT ACCEPTANCE, AND MUST SMOOTH THE GROUND SURFACE WHERE THE FENCE WAS REMOVED THEN MULCH OR SEED & STRAW (SEASON APPROPRIATE GRASS) THE RESTORED SURFACE AS SUNLIGHT CONDITIONS WARRANT.
5. MAINTAIN A SURVEY CONTROL NETWORK OUTSIDE CONSTRUCTION LIMITS. THIS WORK MUST BE PERFORMED BY A LICENSED & REGISTERED STATE OF GEORGIA LAND SURVEYOR. MARK, PRESERVE AND PROTECT SURVEY BENCHMARKS. IF BENCHMARK ARE DEMOLISHED DURING CONSTRUCTION, RELOCATE BENCHMARK, AND PROVIDE DATA ON AS-BUILTS BY SAID LAND SURVEYOR.
6. SPOT ELEVATIONS NOTED ARE FINISH GRADE.
7. CONTRACTOR TO REPLACE EACH CONNECTING PIPE WITH A NEW LEG OF PIPE AS PART OF STRUCTURE REPLACEMENT.
8. DEWATERING DURING CONSTRUCTION WILL BE CONDUCTED AS NEEDED DURING REMOVAL AND REPLACEMENT OF STORM SEWER STRUCTURES AND PIPES. PROVIDE DEWATERING IN ACCORDANCE WITH SPECIFICATION 31 00 00 AND DETAILS ON SHEET CE504.
9. WHERE NEW INLETS WILL BE INSTALLED ON EXISTING STORM SEWER PIPES, SEE DETAIL A1 ON SHEET C-505.
10. PROVIDE PIPE BEDDING IN ACCORDANCE WITH SPECIFICATION 31 00 00.00 06 EARTHWORK AND DETAIL C1 ON SHEET C-504.

AIRFIELD NOTES

1. WHEN AIRFIELD OPERATIONS ARE UNDERWAY, CONTRACTORS WILL ADHERE TO TEMPORARY AIRFIELD CONSTRUCTION WAIVER/RISK ASSESSMENT GUIDELINES FOR THE DESIGNATED WORK AREAS.
2. AIRFIELD CLOSURE NOT APPROVED FOR THIS PROJECT UNLESS DESIGNATED BY THE INSTALLATION COMMANDER.
3. UPON AWARD, THE CONTRACTOR SHALL COORDINATE TO COMPLETE A TEMPORARY CONSTRUCTION WAIVER WITH DOBBINS AIR RESERVE BASE AND IT SHALL STAY IN AFFECT DURING THE ENTIRE CONSTRUCTION PERIOD. RENEWALS SHALL BE APPLIED FOR 60 DAYS IN ADVANCE THROUGH BASE CIVIL ENGINEERING AND THE AIRFIELD MANAGER.
4. UPON AWARD, THE CONTRACTOR MUST COMPLETE AND FILE FAA WAIVER FORM 7460-1 WITH COPIES PROVIDED TO THE CONTRACTING OFFICER AND AIRFIELD MANAGER.
5. WORK WITHIN THE C-130 RAMP AREA AND THE TRANSIENT PARKING RAMP AREA REQUIRE COORDINATION WITH THE CONTRACTING OFFICER 60-DAYS PRIOR TO CONSTRUCTION. THE CONTRACTOR SHALL PROVIDE AND PLACE BARRIERS (AIRPORT LOW PROFILE WATER FILLED BARRICADES WITH LIGHT), AS DIRECTED BY THE AIRFIELD MANAGER FOR CLOSED AIRCRAFT MOVEMENT AREAS. THE CONTRACTOR SHALL PROVIDE A MAP OF THE REQUIRED AREA FOR ACCESS TO THESE SITES FOR APPROVAL.
6. ACCESS TO THE BASE IS RESTRICTED TO THE WEST END COMMERCIAL GATE DOBBINS AND LOCKHEEDMARTIN. ACCESS TO THE AIRFIELD IS RESTRICTED. SEE HAUL ROUTE PLANS FOR VIA TEMPORARY AIRFIELD CONSTRUCTION WAIVER/RISK ASSESSMENT DETAILS.
7. CONTRACTOR SHALL COORDINATE WITH THE CONTRACTING OFFICER AND COMPLY WITH AFI 31-101 AIR FORCE INSTALLATION SECURITY PROGRAM AND DAFI 31-145 ANTITERRORISM. THE CONTRACTORS RESPONSIBILITY LETTER FOR FREE ZONE REQUIREMENTS SHALL BE PROVIDED AT THE PRE-CONSTRUCTION MEETING.
8. CONTRACTOR SHALL TAKE EVERY OPPORTUNITY TO REDUCE THE POTENTIAL OF FOREIGN OBJECTS AND DEBRIS (FOD) AROUND THE AIRFIELD. DURING CONSTRUCTION WORK PERIODS AND AT THE END OF EACH WORK DAY, THE CONTRACTOR SHALL CONDUCT A FOD CHECK OF THE CONSTRUCTION AREA AND CLEAN THE AREA WITH A VACUUM SWEEPER. A VACUUM SWEEPER WITH STEEL BRISTLES WILL NOT BE ALLOWED. REMOVAL OF ANY POTENTIAL FOD AT THE END OF EACH WORK DAY SHALL BE REQUIRED. CONTRACTOR SHALL BE RESPONSIBLE FOR REMOVAL AND DISPOSAL OF ALL FOD FOUND WITHIN THE LIMITS OF CONSTRUCTION.
9. A FOD CHECK MUST BE COMPLETED ON ALL VEHICLES, EQUIPMENT, ETC. UPON EACH ENTRY TO THE AIRFIELD PERIMETER.
10. CONTRACTOR PERSONNEL WHO WILL ROUTINELY OPERATED VEHICLES OR EQUIPMENT MUST COMPLETED THE BASE AIRFIELD DRIVING COURSE PRIOR TO THE START OF WORK. THIS COURSE IS 8 HOURS IN DURATION AND REQUIRES REVIEW OF MATERIAL AHEAD OF TIME AS WELL AS A WRITTEN EXAM. SUPPLY VEHICLES SUCH AS DUMP HAULS AND OR CONCRETE TRUCKS MAY BE ESCORTED BY A INDIVIDUAL WHO HAS COMPLETED AND PASSED THE AIRFIELD DRIVING COURSE. AIRFIELD DRIVING COURSE WILL BE PROVIDED BY DOBBINS ARB STAFF, NO FEE FOR THE CLASS IS REQUIRED.
11. THE CONTRACTOR SHALL COORDINATE WITH THE CONTRACTING OFFICER FOR THE DISPLACED THRESHOLD SCHEDULE 60 DAYS PRIOR TO CONSTRUCTION. THE CONTRACTOR IS REQUIRED TO PROVIDE NEW DISPLACED THRESHOLD PAVEMENT MARKINGS, RENUMBER RUNWAY DISTANCE MARKERS, USE APPROPRIATE SIGN COVERS TO CLOSE TAXIWAYS/AIRCRAFT MOVEMENT AREAS AS APPLICABLE AND REMOVAL OF DISPLACED THRESHOLD PAVEMENT MARKINGS. COORDINATE WITH AIRFIELD MANAGER FOR CHANGES TO RUNWAY LIGHTING CONFIGURATIONS ASSOCIATED WITH THE DISPLACED THRESHOLD. AS OUTLINED IN UFC 3-260-04 PAVEMENT MARKING SCHEMES. THE CONTRACTOR IS RESPONSIBLE FOR RESTORING THE RUNWAY PAVEMENT MARKINGS, AND AIRFIELD SIGNS TO THE ORIGINAL CONDITION EXISTING PRIOR TO THE DISPLACED THRESHOLD. THE CONTRACTOR IS ALSO RESPONSIBLE FOR PROVIDING AND PLACING TEMPORARY BARRICADES (AIRPORT LOW PROFILE WATER FILLED BARRICADES WITH LIGHT) AT DESIGNATED LOCATIONS. THE DISPLACED THRESHOLD SHALL BE IN PLACE MAXIMUM 45 CALENDAR DAYS AND ALL WORK SHALL BE COMPLETED IN THAT TIME PERIOD.
12. IN THE PRESENCE OF THE CONTRACTING OFFICER, PERFORM A SURVEY OF EXISTING RUNWAY OR TAXIWAY EDGE LIGHTS, RDM'S (RUNWAY DISTANCE MARKERS), AND AIRFIELD SIGNAGE TO DETERMINE WITHIN 100' BEYOND THE EDGE OF THE CONSTRUCTION AREA SHOWN ON THE DRAWINGS AND RECORD THE LOCATION OF ANY NON-FUNCTIONAL OR DAMAGED UNITS PRIOR TO CONSTRUCTION. PRIOR TO DEMOLITION THE CONTRACTOR SHALL SUBMIT A REPORT TO THE GOVERNMENT FOR REVIEW. ANY DAMAGE OR LOSS OF FUNCTION SHOWN TO HAVE OCCURRED DURING CONSTRUCTION MUST BE REPAIRED BY THE CONTRACTOR AT NO EXPENSE TO THE GOVERNMENT.
13. TO WORK AND PROVIDE FREE WORK ZONE WITHIN RESTRICTED AREAS OF THE FACILITY, THE CONTRACTOR SHALL PROVIDE RED FLASHING LIGHTED AND WEIGHTED LOW PROFILE BARRICADES WITHIN AIRFIELD RESTRICTED SPACE WHERE AND WHEN DIRECTED BY THE AIRFIELD MANAGER OR COR. NO SOLAR LIGHTS ARE ACCEPTED FOR LOW PROFILE BARRICADES, BATTERY POWERED ONLY.
14. SOIL CONTAINING PFAS IS PRESENT WITHIN THE DARB AIRFIELD. SEE A3/C-001 FOR PFAS LOCATIONS. SEE SPECIFICATION SECTION 01 56 00 - DOBBINS ARB ENVIRONMENTAL REQUIREMENTS.
15. CONTRACTOR PERSONNEL WILL ADHERE TO THE TEMPORARY AIRFIELD CONSTRUCTION WAIVER/RISK ASSESSMENT GUIDELINES WHEN OPERATING ON THE AIRFIELD.

STORM SEWER NOTES

1. ALL RCP SHALL BE CLASS III EXCEPT WHERE NOTED.
2. REFER TO PLAN SHEETS FOR ALL GRATE INLET MODEL NUMBERS.
3. ALL STORM SEWER LINES SHALL HAVE BEDDING PER THE PROFILES AND DETAILS.
4. ALL INLETS SHALL MEET AIRFIELD TRAFFIC STANDARDS AND ALL INLETS/BOXES SHALL BE CAPABLE TO WITHSTAND AIRCRAFT LOADING OF A C5 (840,000 LBS), IF THE INLET OR BOX IS WITHIN 250' OF THE CENTERLINE OF THE LANDING STRIP OR ASPHALT STRIP, 50' FROM THE EDGE OF A TAXIWAY.
5. ALL STORM STRUCTURES SHALL BE A MINIMUM OF 48" INSIDE DIAMETER. ALL FRAME/GRATE SHALL BE CAST INTO A FLAT TOP BY THE PRECAST MANUFACTURER. FLAT TOP/CONCRETE COLLAR AND FRAME/GRATE SHALL BE FLUSH WITH FINAL GRADE. ALL STRUCTURES PLACED ON TOP OF A BOX CULVERT SHALL BE AT LEAST 48" INSIDE DIAMETER.
6. PIPE LENGTHS SHOWN ARE MEASURED FROM CENTER OF STRUCTURE TO CENTER OF STRUCTURE. CONTRACTOR SHALL BID OUTSIDE OF STRUCTURE TO OUTSIDE OF STRUCTURE.
7. THE CONTRACTOR SHALL CONSTRUCT AND INSTALL THE GRATE INLETS PRIOR TO PERFORMING THE CENTRIFUGALLY CAST CONCRETE PIPE INSTALLATION. THE CONTRACTOR SHALL INSTALL PRECAST GRATE INLETS. THE INSTALLATION SHALL REQUIRE THE REMOVAL OF EXISTING PIPE IN ORDER TO INSTALL THE PROPOSED GRATED INLET. THE CONTRACTOR SHALL INCLUDE THE REMOVAL AND REPLACEMENT OF EXISTING PIPE AND THE PIPE COLLARS REQUIRED TO CONNECT THE PROPOSED PIPE TO EXISTING PIPE.
8. PRIOR TO PERFORMING CENTRIFUGALLY CAST CONCRETE PIPE INSTALLATION, THE CONTRACTOR WILL BE REQUIRED TO INSTALL MEASURES THAT WILL MAINTAIN DRY CONDITIONS IN THE PIPE. THE CONTRACTOR SHALL PROVIDE THE BASE WITH A CONSTRUCTION PHASING PLAN PRIOR TO THE INSTALLATION. EQUIPMENT AND MATERIAL USED TO MAINTAIN THE DRY CONDITION SHALL BE INCLUDED IN THE BID. THIS SHOULD INCLUDE ANY BYPASS PUMPING NEEDED TO MAINTAIN AIRFIELD DRAINAGE DURING CONSTRUCTION. THE CONTRACTOR SHALL FOLLOW THE GEORGIA SOIL AND WATER CONSERVATION'S MANUAL FOR EROSION AND SEDIMENT CONTROL DURING THE INSTALLATION.
9. SEE PROFILES AND STORM SEWER NOTES FOR ALL STORM SEWER ELEVATIONS, STORM SEWER PIPE SIZES, STORM SEWER MATERIALS AND SPECIFICATIONS, STORM SEWER CASING SPECIFICATIONS AND SLOPES.
10. OVER-EXCAVATE ALL STORM SEWER LINES THAT ARE WITHIN 2-FT OF THE SEASONAL HIGH WATER TABLE AND REPLACE THE TOP 12 INCHES WITH WASHED No. 34 CRUSHED STONE WRAPPED IN 6 OZ. NON-WOVEN GEOTEXTILE. WHERE APPLICABLE (SEE DETAILS) No. 57 CRUSHED STONE SHALL EXTEND TO THE MIDPOINT OF THE PIPE OR BOX CULVERT AND SHALL BE WRAPPED IN 6 OZ. NON-WOVEN GEOTEXTILE WITH PERFORATED DRAIN PIPE.
11. CONTRACTOR SHALL VERIFY LOCATION OF PIPE, REPAIRS, AND UTILITIES BEFORE CUTTING PAVEMENT.
12. WHERE IDENTIFIED ON THE PLANS TO "CLEAN PIPES" THIS IS TO REMOVE ACCUMULATED SEDIMENT AND DEBRIS WITHIN THE PIPE WITHOUT DAMAGE TO THE EXISTING INFRASTRUCTURE.
13. THE CONTRACTOR SHALL PERFORM VIDEO CAMERA INSPECTIONS OF ALL PIPES AND STRUCTURES AS SPECIFIED IN SECTION 01 01 00 FOR PHASE II. ELECTRONIC FILES OF ALL INSPECTION VIDEOS SHALL BE PROVIDED.
14. ALL PIPES SHALL BE CLEANED TO A LEVEL ACCEPTABLE TO THE MANUFACTURE WHEN PIPE LINING IS SPECIFIED.
15. CONTRACTOR TO PROTECT EXISTING STANDPIPE. REPLACEMENT IN KIND OF THE EXISTING STANDPIPE WILL NOT VOID THE TEMPORARY WAIVER.
16. PIPES DAMAGED DURING CONSTRUCTIONS MUST BE REPLACED USING PIPE MATERIALS APPROVED BY THE COR AT CONTRACTORS EXPENSE

LINING NOTES

1. PIPE GREATER THAN 24" SHALL BE PER SPEC 33 40 00.
2. PIPE LESS THAN 24" SHALL BE CURE IN PLACE PIPE REPAIR (CIPP).
3. POINT REPAIR FOR PIPES SHALL BE TRENCHLESS REPAIR SYSTEM (BASIS OF DESIGN IS HAMMERHEAD TRENCHLESS SYSTEM).

A3 PFAS LOCATIONS
SCALE: N.T.S.

NORTH

US Army Corps of Engineers®
Louisville District

TANYA NORMAN, P.E.
P.E. No. 0038055, GA

GEORGIA REGISTERED No. PE038055 PROFESSIONAL ENGINEER TANYA L. NORMAN

DATE: 01/09/2026

MARK	DESCRIPTION	DATE

ISSUE DATE: JANUARY 9, 2026
SOLICITATION NO.:
CONTRACT NO.:
FILE NUMBER: 1230218

DESIGNED BY: T. NORMAN
DRAWN BY: J.P. ARISTIZABAL
CHECKED BY: D.M. LECKIE
SUBMITTED BY: A. DUEHR
SIZE: ANSI D
FILE NAME: G-001.dwg

U.S. ARMY CORPS OF ENGINEERS
LOUISVILLE DISTRICT
LOUISVILLE, KENTUCKY 40210-0059

POND
3500 PARKWAY LANE
SUITE 500
PEACHTREE CORNERS, GA 30092
PHONE (678) 336-7740
POND JOB No. 1230218

REPAIR & MAINTAIN AIRFIELD STORMWATER SYSTEM
PHASE II
DOBBINS AIR RESERVE BASE, GEORGIA
PROJECT NO.: FGWB 21-0002 & FGWB 25-0006
P2#: 470584

CIVIL GENERAL NOTES

SHEET ID
C-002

CERTIFIED FINAL

FILE PATH: X:\FY23\1230218\04.CAD BIM\04.02.CAD_PH 2 SHEETS\G-001 PLOTTED: 01/09/2026 BY: NORMAN, TANYA

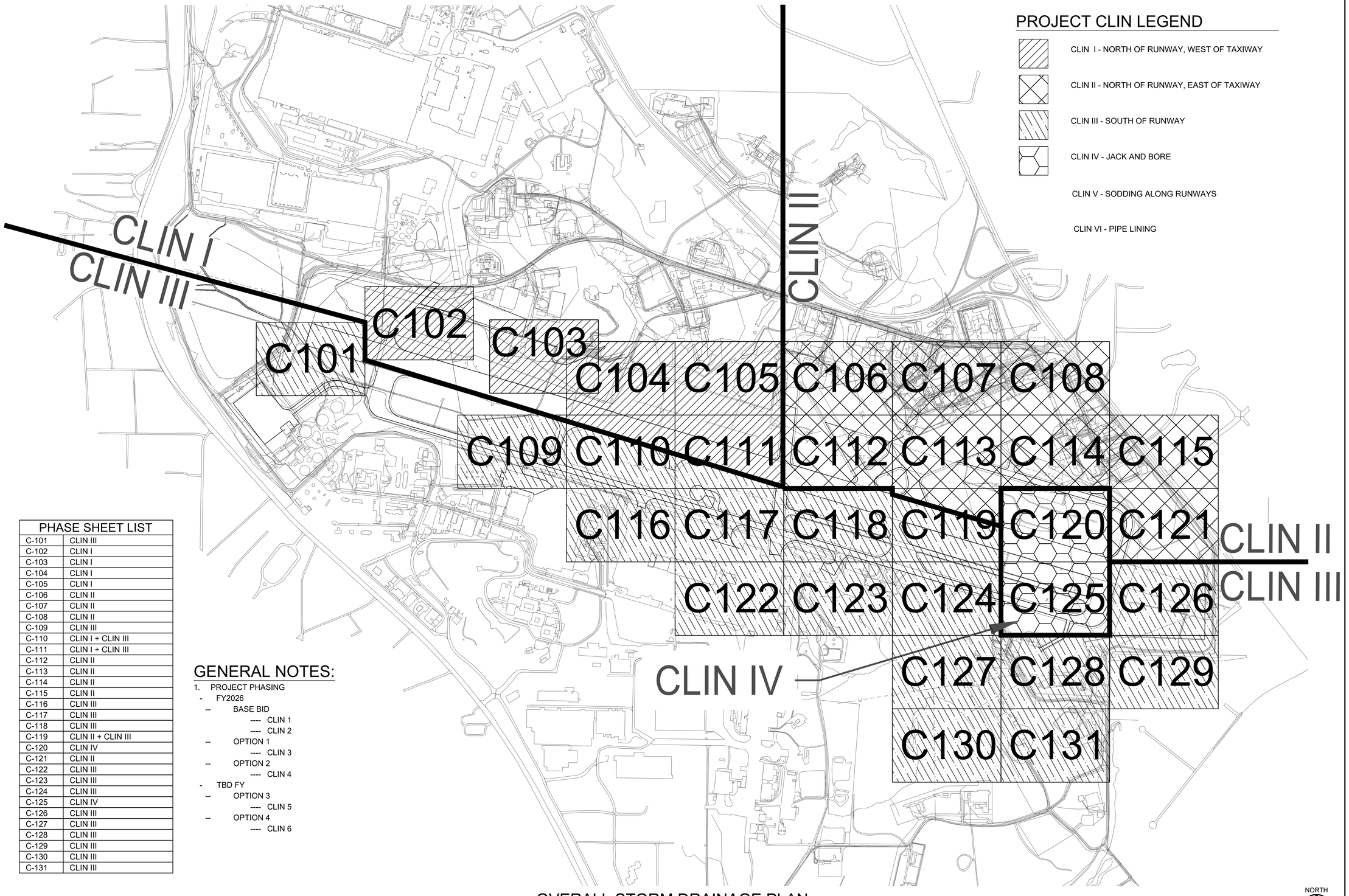

PHASE SHEET LIST	
C-101	CLIN III
C-102	CLIN I
C-103	CLIN I
C-104	CLIN I
C-105	CLIN I
C-106	CLIN II
C-107	CLIN II
C-108	CLIN II
C-109	CLIN III
C-110	CLIN I + CLIN III
C-111	CLIN I + CLIN III
C-112	CLIN II
C-113	CLIN II
C-114	CLIN II
C-115	CLIN II
C-116	CLIN III
C-117	CLIN III
C-118	CLIN III
C-119	CLIN II + CLIN III
C-120	CLIN IV
C-121	CLIN II
C-122	CLIN III
C-123	CLIN III
C-124	CLIN III
C-125	CLIN IV
C-126	CLIN III
C-127	CLIN III
C-128	CLIN III
C-129	CLIN III
C-130	CLIN III
C-131	CLIN III

GENERAL NOTES:

1. PROJECT PHASING
   - FY2026
     - -- BASE BID
       - ---- CLIN 1
       - ---- CLIN 2
     - -- OPTION 1
       - ---- CLIN 3
     - -- OPTION 2
       - ---- CLIN 4
   - TBD FY
     - -- OPTION 3
       - ---- CLIN 5
     - -- OPTION 4
       - ---- CLIN 6

OVERALL STORM DRAINAGE PLAN

SCALE: 1" = 600'

0 300' 600' 1200' 1800'

NORTH

US Army Corps of Engineers®
Louisville District

TANYA NORMAN, P.E.
P.E. No. 0038055, GA

GEORGIA REGISTERED No. PE038055 PROFESSIONAL ENGINEER TANYA L. NORMAN

DATE: 01/09/2026

MARK	DESCRIPTION	DATE

DESIGNED BY: T. NORMAN
DRAWN BY: J.P. ARISTIZABAL
CHECKED BY: D.M. LECKIE
SUBMITTED BY: A. DUEÑAS
SIZE: ANSI D
ISSUE DATE: JANUARY 9, 2026
SOLICITATION NO.:
CONTRACT NO.:
FILE NUMBER: 4230216
FILE NAME: G-001.dwg

U.S. ARMY CORPS OF ENGINEERS
LOUISVILLE DISTRICT
LOUISVILLE, KENTUCKY 40210-0059

POND
POND
3055 KEMPSVILLE ROAD, SUITE 500 NORFOLK, VA 23502
3945 KEMPSVILLE ROAD, SUITE 500 NORFOLK, VA 23502
PHONE (757) 490-7715
PHONE (757) 490-7715

REPAIR & MAINTAIN AIRFIELD STORMWATER SYSTEM
PHASE II
DOBBINS AIR RESERVE BASE, GEORGIA
PROJECT NO.: FGWB 21-0002 & FGWB 25-0006
PZ#: 470584

OVERALL STORM DRAINAGE PLAN

SHEET ID
C-100

CERTIFIED FINAL

FILE PATH: X:\FY23\123021804.CAD BIM\04.02.CAD_PH 2 SHEETS\G-001 PLOTTED: 01/09/2026 BY: NORMAN, TANYA

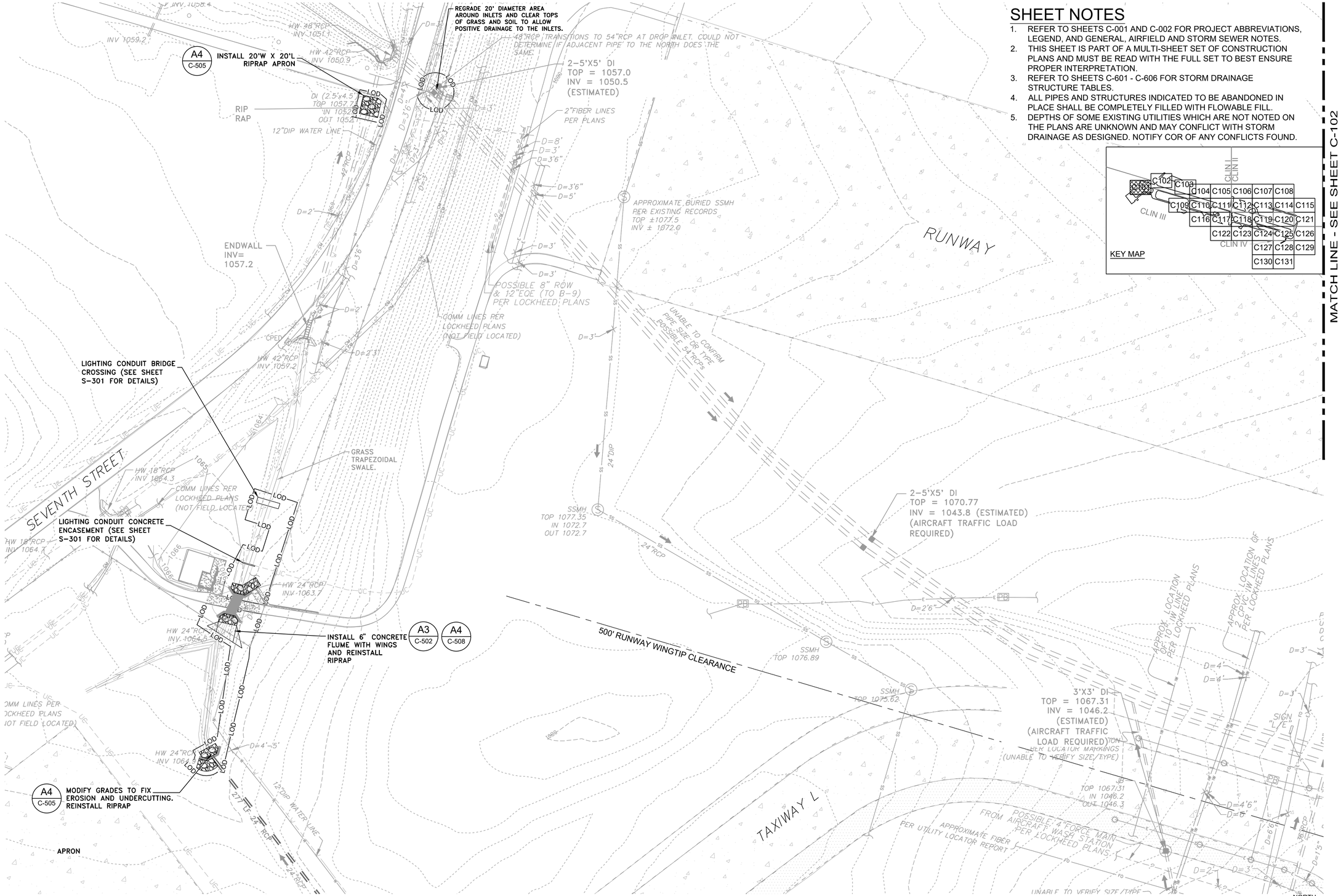

SHEET NOTES

1. REFER TO SHEETS C-001 AND C-002 FOR PROJECT ABBREVIATIONS, LEGEND, AND GENERAL, AIRFIELD AND STORM SEWER NOTES.
2. THIS SHEET IS PART OF A MULTI-SHEET SET OF CONSTRUCTION PLANS AND MUST BE READ WITH THE FULL SET TO BEST ENSURE PROPER INTERPRETATION.
3. REFER TO SHEETS C-601 - C-606 FOR STORM DRAINAGE STRUCTURE TABLES.
4. ALL PIPES AND STRUCTURES INDICATED TO BE ABANDONED IN PLACE SHALL BE COMPLETELY FILLED WITH FLOWABLE FILL.
5. DEPTHS OF SOME EXISTING UTILITIES WHICH ARE NOT NOTED ON THE PLANS ARE UNKNOWN AND MAY CONFLICT WITH STORM DRAINAGE AS DESIGNED. NOTIFY COR OF ANY CONFLICTS FOUND.

MATCH LINE - SEE SHEET C-102

A1 STORM DRAINAGE PLAN
SCALE: 1" = 50'

US Army Corps of Engineers®
Louisville District

TANYA NORMAN, P.E.
P.E. No. 0038055, GA
GEORGIA REGISTERED No. PE038055 PROFESSIONAL ENGINEER TANYA L. NORMAN
DATE: 01/09/2026

MARK	DESCRIPTION	DATE

DESIGNED BY: T. NORMAN
DRAWN BY: J.P. ARISTIZABAL
CHECKED BY: D.M. LECKIE
SUBMITTED BY: A. ZEHNER
ANSI D
ISSUE DATE: JANUARY 9, 2026
SOLICITATION NO.:
CONTRACT NO.:
FILE NUMBER: 1230216
FILE NAME: 470584-C-101(A).dwg

U.S. ARMY CORPS OF ENGINEERS
LOUISVILLE DISTRICT
LOUISVILLE, KENTUCKY 40210-0059

POND
POND & COMPANY
SUITE 500
101 SOUTHWAY LANE
ROSWELL, GEORGIA 30076
PHONE (678) 336-2310
FAX (678) 336-2319

REPAIR & MAINTAIN AIRFIELD STORMWATER SYSTEM
PHASE II
DOBBINS AIR RESERVE BASE, GEORGIA
PROJECT NO.: FGWB 21-0002 & FGWB 25-0006
P2#: 470584

STORM DRAINAGE PLAN

SHEET ID
C-101

FILE PATH: X:\PY23\1230216\04.CAD BIM\04.02.CAD_PH 2 SHEETS\470584-C-101(A) PLOTTED: 01/09/2026 BY: NORMAN, TANYA

CERTIFIED FINAL

SHEET NOTES

1. REFER TO SHEETS C-001 AND C-002 FOR PROJECT ABBREVIATIONS, LEGEND, AND GENERAL, AIRFIELD AND STORM SEWER NOTES.
2. THIS SHEET IS PART OF A MULTI-SHEET SET OF CONSTRUCTION PLANS AND MUST BE READ WITH THE FULL SET TO BEST ENSURE PROPER INTERPRETATION.
3. REFER TO SHEETS C-601 - C-606 FOR STORM DRAINAGE STRUCTURE TABLES.
4. ALL PIPES AND STRUCTURES INDICATED TO BE ABANDONED IN PLACE SHALL BE COMPLETELY FILLED WITH FLOWABLE FILL.
5. DEPTHS OF SOME EXISTING UTILITIES WHICH ARE NOT NOTED ON THE PLANS ARE UNKNOWN AND MAY CONFLICT WITH STORM DRAINAGE AS DESIGNED. NOTIFY COR OF ANY CONFLICTS FOUND.

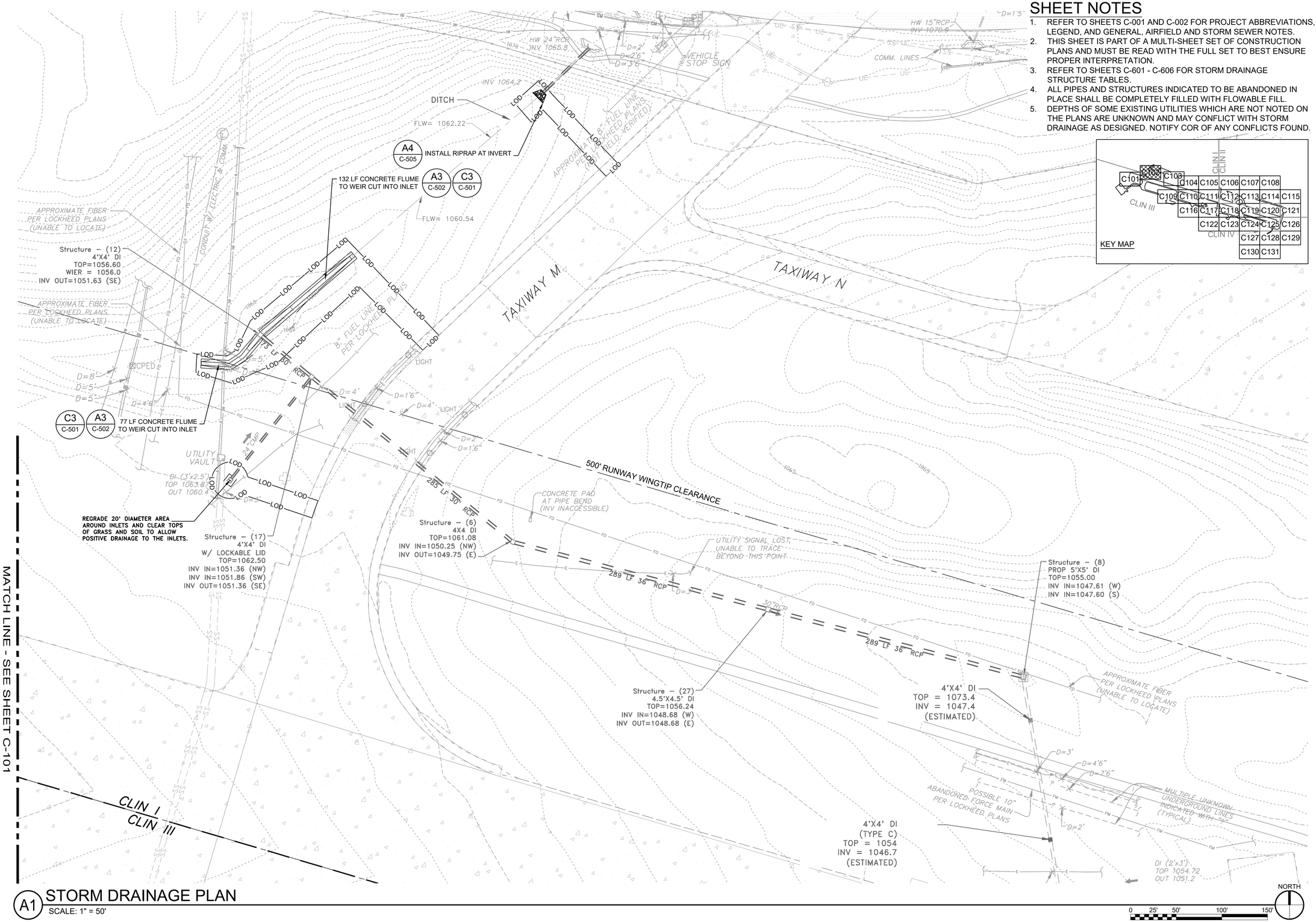

A1 STORM DRAINAGE PLAN
SCALE: 1" = 50'

0 25' 50' 100' 150'

NORTH

US Army Corps of Engineers®
Louisville District

TANYA NORMAN, P.E.
P.E. No. 0038055, GA
GEORGIA REGISTERED No. PE0038055 PROFESSIONAL ENGINEER TANYA L. NORMAN
DATE: 01/09/2026

MARK	DESCRIPTION	DATE

DESIGNED BY: T. NORMAN
DRAWN BY: J.P. ARISTIZABAL
CHECKED BY: D.M. LECKIE
SUBMITTED BY: S. DUEHR
SIZE: ANSI D
ISSUE DATE: JANUARY 9, 2026
SOLICITATION NO.:
CONTRACT NO.:
FILE NUMBER: 1230216
FILE NAME: 470584-C-101(A).dwg

U.S. ARMY CORPS OF ENGINEERS
LOUISVILLE DISTRICT
LOUISVILLE, KENTUCKY 40210-0059

POND
3825 EDWARDS ROAD
SUITE 300
CINCINNATI, OH 45209
PHONE (859) 578-7373
PHONE (859) 578-7376

REPAIR & MAINTAIN AIRFIELD STORMWATER SYSTEM
PHASE II
DOBBINS AIR RESERVE BASE, GEORGIA
PROJECT NO.: FGWB 21-0002 & FGWB 25-0006
P2#: 470584

STORM DRAINAGE PLAN

SHEET ID
C-102

CERTIFIED FINAL

FILE PATH: X:\PY23\123021809A\CAD BIM\04.02.CAD_PH 2 SHEETS\470584-C-101(A) PLOTTED: 01/09/2026 BY: NORMAN, TANYA

SHEET NOTES

1. REFER TO SHEETS C-001 AND C-002 FOR PROJECT ABBREVIATIONS, LEGEND, AND GENERAL, AIRFIELD AND STORM SEWER NOTES.
2. THIS SHEET IS PART OF A MULTI-SHEET SET OF CONSTRUCTION PLANS AND MUST BE READ WITH THE FULL SET TO BEST ENSURE PROPER INTERPRETATION.
3. REFER TO SHEETS C-601 - C-606 FOR STORM DRAINAGE STRUCTURE TABLES.
4. ALL PIPES AND STRUCTURES INDICATED TO BE ABANDONED IN PLACE SHALL BE COMPLETELY FILLED WITH FLOWABLE FILL.
5. DEPTHS OF SOME EXISTING UTILITIES WHICH ARE NOT NOTED ON THE PLANS ARE UNKNOWN AND MAY CONFLICT WITH STORM DRAINAGE AS DESIGNED. NOTIFY COR OF ANY CONFLICTS FOUND.

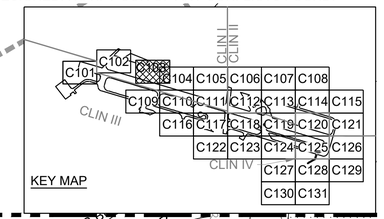

A4 C-505 REINFORCE BOTTOM OF FLUME/HEADWALL WITH TYPE 1 RIPRAP

A3 C-502 FLOWABLE FILL EX. SINK HOLE AND EXTEND NEW FLUME APPROX. 35 LF UP HILL.

MATCH THE EXISTING FLUME DOWELS INSTALLED AT THE CONNECTION TO PREVENT MOVEMENT, APPLY AN ADHESIVE SEALANT TO PROVIDE A WATERTIGHT JOINT. ALONG INTERFACE WITH EXISTING FLUME.

REPLACE 34 LF OF 30" CMP PIPE. RESTORE PAVEMENT IF DAMAGED. REPLACE HEADWALLS IN DAMAGED. C3 C-504 A1 C-511

A4 C-508 DEMOLISH CHANNEL SIDE SLOPES, RECOMPACT EDGE OF EXISTING FLUME, AND INSTALL WING TRANSITION TO EXISTING FLUME. TIE NEW FLUME SECTION TO EXISTING WITH DOWELS MATCHING EXISTING.

APPROXIMATE LOCATION OF JOINT SEPARATION. SEAL JOINT AT JOINT SEPARATION. DEMOLISH AND REPLACE 18" SECTION ON EACH SIDE OF JOINT IF JOINT SEPARATION EXCEEDS 1" AND REPAIR WITH DOWELS AND EXPANSION JOINT MATERIALS IN ACCORDANCE WITH DETAIL A3/C-502, SECTION B-B.

EXISTING DRIVE

EXISTING FLUME

CONCRETE DRIVE

RUNWAY

EX. GABION BASKETS

GATE

75' IMPERVIOUS BUFFER

50' COUNTY BUFFER

25' STATE BUFFER

WL7

EX. WETLANDS

REPLACE APPROX. 472 LF OF FENCE AND ROUTE OVER BOX CULVERTS. A1 C-514

OW1

EDGE OF WATER

(4) 6'W X 4'H X 8'L REINFORCED CONCRETE CULVERT BOXES WITH HINGED BAR SCREEN ATTACHED TO THE DOWNSTREAM END OF EACH CULVERT B3 C-503

C1 C-501 REVISE GRADES TO INLETS AND ADD CONCRETE COLLAR TO AVOID UNDERCUTTING

2-5.5'X5.5' DI
TOP = 1027.74
INV = 1007.3

POSSIBLE PIPE TRANSITIONS FROM 54"RCP TO 54"CMP ALONG THESE SECTIONS OF PIPE

APPROX. 1W LINE PER DOBBINS GIS (UNABLE TO LOCATE)

APPROXIMATE FIBER PER UTILITY LOCATOR MARKINGS (NO DEPTH)

APPROXIMATE FIBER PER LOCKHEED PLANS (UNABLE TO LOCATE)

APPROX. 10"DIP FORCE MAIN PER LOCATOR MARKINGS

10"DIP FORCE MAIN (ABANDONED) PER LOCKHEED PLANS

MULTIPLE UNKNOWN UNDERGROUND LINES INDICATED WITH "?" (TYPICAL)

DI (2'x6.2')
TOP 1038.46
BOTTOM 1006.7

BENCHMARK
GEO #6 (60d Nail)
N:1,425,711.49
E:2,188,112.69
EL:1,019.95

S-54
HW
INV IN=1024.90 (S)

S-53
DI (2'x3')
TOP=1032.62
INV OUT=1026.30 (N)

APPROXIMATE FIBER PER LOCKHEED PLANS (UNABLE TO LOCATE)

24"CMP
24"RCP

10"DIP FORCE MAIN PER LOCKHEED PLANS

10"DIP FORCE MAIN (ABANDONED) PER LOCKHEED PLANS

MATCH LINE - SEE SHEET C-104

96 LF CONCRETE FLUME TO TIE INTO EXISTING CONCRETE FLUME A3 C-502

EX. 30"CMP INV 1037.3

36"CMP INV 1037.9

NORTH

0 25' 50' 100' 150'

A1 STORM DRAINAGE PLAN
SCALE: 1" = 50'

US Army Corps of Engineers®
Louisville District

TANYA NORMAN, P.E.
P.E. No. 0038055, GA

GEORGIA REGISTERED No. PE038055 PROFESSIONAL ENGINEER TANYA L. NORMAN

DATE: 01/09/2026

MARK	DESCRIPTION	DATE

ISSUE DATE: JANUARY 9, 2026
SOLICITATION NO.:
CONTRACT NO.:
FILE NUMBER: 1230218
FILE NAME: 470584-C-101(A).dwg

DESIGNED BY: T. NORMAN
DRAWN BY: J.P. ARISTIZABAL
CHECKED BY: D.M. LECKIE
SUBMITTED BY: A. DUERR
ANSI D

U.S. ARMY CORPS OF ENGINEERS
LOUISVILLE DISTRICT
LOUISVILLE, KENTUCKY 40210-0059

POND
POND
3540 E. LONGWOOD LAKE
SUITE 300 LONGWOOD, GA 32750
PHONE (689) 530-0743
POND-INC.COM

REPAIR & MAINTAIN AIRFIELD STORMWATER SYSTEM PHASE II
DOBBINS AIR RESERVE BASE, GEORGIA
PROJECT NO.: FGWB 21-0002 & FGWB 25-0006
P2#: 470584

STORM DRAINAGE PLAN

SHEET ID
C-103

CERTIFIED FINAL

FILE PATH: X:\FY23\123021804.CAD BIM\04.02.CAD_PH 2 SHEETS\470584-C-101(A) PLOTTED: 01/09/2026 BY: NORMAN, TANYA

SHEET NOTES

1. REFER TO SHEETS C-001 AND C-002 FOR PROJECT ABBREVIATIONS, LEGEND, AND GENERAL, AIRFIELD AND STORM SEWER NOTES.
2. THIS SHEET IS PART OF A MULTI-SHEET SET OF CONSTRUCTION PLANS AND MUST BE READ WITH THE FULL SET TO BEST ENSURE PROPER INTERPRETATION.
3. REFER TO SHEETS C-601 - C-606 FOR STORM DRAINAGE STRUCTURE TABLES.
4. ALL PIPES AND STRUCTURES INDICATED TO BE ABANDONED IN PLACE SHALL BE COMPLETELY FILLED WITH FLOWABLE FILL.
5. DEPTHS OF SOME EXISTING UTILITIES WHICH ARE NOT NOTED ON THE PLANS ARE UNKNOWN AND MAY CONFLICT WITH STORM DRAINAGE AS DESIGNED. NOTIFY COR OF ANY CONFLICTS FOUND.

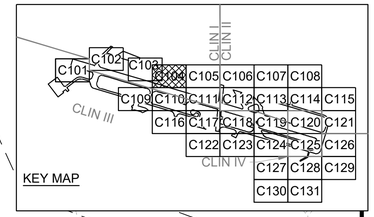

KEY MAP

A1 / C-514 — REPLACE APPROX. 460 LF OF FENCE AND AFFIX TO PARALLEL RUNS OF REINFORCED CONCRETE BOX CULVERT WATER CROSSING.

B3 / C-503 — (4) 6'W X 4'H X 8'L REINFORCED CONCRETE CULVERT BOXES WITH HINGED BAR SCREEN ATTACHED TO THE DOWNSTREAM END OF EACH CULVERT

A1 / C-507 — S-175 HW
DEMOLISH AND REPLACE HEADWALLL AND INSTALL SECURITY GRATE
INV IN=971.18 (SW)

REMOVE EXISTING 23 LF 24" RCP AND INSTALL 23 LF 24" RCP

REPAIR ERODED SLOPE. COMPACT THE AREA, AND RESOD ALL DISTURBED SECTIONS WITH GEOGRID REINFORCEMENT.

S-170
JB TO REMAIN
TOP=981.07
INV IN=975.40 (S)
INV OUT=971.41 (NE)

A1 / C-514 — REMOVE AND REPLACE EXISTING 6' CHAIN-LINK FENCE. MAINTAIN A SECURE AIRFIELD PERIMETER THROUGHOUT CONSTRUCTION.

REMOVE EXISTING 114 LF 24" RCP AND INSTALL 114 LF 24" RCP

REMOVE EXISTING TREES AS NEEDED FOR PIPE INSTALLATION

S-180

A2 / C-508 — DEMOLISH EXISTING AREA DRAIN AND INSTALL NEW DI
TOP=993.88
INV OUT=986.77 (N)

S-140
JB
RAISE TOP TO FINISHED GRADE
TOP=1015.50
INV IN=993.89 (SW)
INV IN=994.14 (S)
INV OUT=993.89 (NE)

S-110
TO REMAIN
DI (2'x3')
TOP=1024.52
INV IN=1003.90 (W)
INV IN=1003.90 (E)
INV OUT=1003.80 (NE)

REGRADE TO DRAIN AND RESOD

REMOVE EXISTING 371 LF 36" CMP
INSTALL 371 LF 36" RCP

TO BE LINED 152 LF 36" CMP

TO BE LINED 272 LF 30" CMP

S-100
TO REMAIN
DI (2'x3')
TOP=1026.89
INV OUT=1023.10 (E)

REGRADE TO DRAIN AND RESOD

REMOVE EXISTING 295 LF 18"CMP AND INSTALL 295 LF 18" RCP

REGRADE TO DRAIN AND RESOD

REMOVE EXISTING 305 LF 18"CMP AND INSTALL 305 LF 18" RCP

ABANDON IN PLACE 64 LF 10" RCP

S-50
ABANDON DI (2'x3')
TOP=1017.22
INV OUT=1013.20 (SE)

PLUG PIPES AT DROP INLET AND PLUG STRUCTURE.

PLUG PIPES AT DROP INLET AND PLUG STRUCTURE.

S-51
ABANDON DI (2'x3')
TOP=1017.24
INV IN=1011.80 (NW)
INV OUT=1011.40 (E)

ABANDON IN PLACE 187 LF 10" RCP

S-52
HW
REMOVE EXISTING HEADWALL
INV IN=1009.00 (W)

PLUG PIPE AT HW.

S-54
HW
INV IN=1024.90 (S)

S-53
DI (2'x3')
TOP=1032.62
INV OUT=1026.30 (N)

24" RCP

SOD REPLACEMENT APPROXIMATE DISTANCE 106'

C3 / C-502 — SOD REPLACEMENT

MATCH LINE - SEE SHEET C-103

MATCH LINE - SEE SHEET C-105

MATCH LINE - SEE SHEET C-110

EXISTING LAKE WATER SURFACE ELEV. 1007.3'

EX. WETLANDS

OPEN WATER 111

OW1

75' IMPERVIOUS BUFFER

50' COUNTY BUFFER

25' STATE BUFFER

BENCHMARK
GEO #6 (60d Nail)
N: 1,425,711.49
E: 2,188,112.69
EL: 1,019.95

BENCHMARK
GEO #2 (60d Nail)
N: 1,425,809.12
E: 2,188,877.59
EL: 1,013.35

BENCHMARK "60D NAIL"
GEO #3785
N: 1,425,124.67
E: 2,189,288.83
EL: 1,025.60

EL: 1,015.39

SURVEY DATE: 11-24-2016
PHASE I SURVEY LIMITS
BEGIN PHASE II
SURVEY DATE: 7-19-2018

APPROXIMATE FIBER PER LOCKHEED PLANS (UNABLE TO LOCATE)

10"DIP FORCE MAIN PER LOCKHEED PLANS

10"DIP FORCE MAIN (ABANDONED) PER LOCKHEED PLANS

POSSIBLE BURIED STRUCTURE PER DOBBINS GIS (NOT EVIDENT)

OBSCURED AREA - CONTOURS APPROXIMATE

ACCESS ROAD

6' CHAIN-LINK FENCE

A1 STORM DRAINAGE PLAN
SCALE: 1" = 50'

0 25' 50' 100' 150'

NORTH

US Army Corps of Engineers®
Louisville District

TANYA NORMAN, P.E.
P.E. No. 0038055, GA

GEORGIA REGISTERED No. PE0038055 PROFESSIONAL ENGINEER TANYA L. NORMAN

DATE: 01/09/2026

MARK	DESCRIPTION	DATE

DESIGNED BY: T. NORMAN
DRAWN BY: J.P. ARISTIZABAL
CHECKED BY: D.M. LECKIE
SUBMITTED BY: A. DUERR
ANSI D
ISSUE DATE: JANUARY 9, 2026
SOLICITATION NO.:
CONTRACT NO.:
FILE NUMBER: 1230216
FILE NAME: 470584-C-101(A).dwg

U.S. ARMY CORPS OF ENGINEERS
LOUISVILLE DISTRICT
LOUISVILLE, KENTUCKY 40210-0059

POND
3025 BEE CAVE ROAD, SUITE A200 WEST LAKE HILLS, TEXAS 78746 PHONE: (512) 330-7430 POND-ENG.COM

REPAIR & MAINTAIN AIRFIELD STORMWATER SYSTEM
PHASE II
DOBBINS AIR RESERVE BASE, GEORGIA
PROJECT NO.: FGWB 21-0002 & FGWB 25-0006
P2#: 470584

STORM DRAINAGE PLAN

SHEET ID
C-104

FILE PATH: X:\FY23\1230216\04.CAD_PH 2 SHEETS\470584-C-101(A) PLOTTED: 01/09/2026 BY: NORMAN, TANYA

CERTIFIED FINAL

SHEET NOTES

1. REFER TO SHEETS C-001 AND C-002 FOR PROJECT ABBREVIATIONS AND GENERAL, AIRFIELD AND STORM SEWER NOTES.
2. THIS SHEET IS PART OF A MULTI-SHEET SET OF CONSTRUCTION PLANS AND MUST BE READ WITH THE FULL SET TO BEST ENSURE PROPER INTERPRETATION.
3. REFER TO SHEETS C-601 - C-604 FOR STORM DRAINAGE STRUCTURE TABLES.
4. ALL PIPES AND STRUCTURES INDICATED TO BE ABANDONED IN PLACE SHALL BE COMPLETELY FILLED WITH FLOWABLE FILL.
5. REMOVE AND REPLACE FENCE AS REQUIRED. CONTRACTOR MUST VERIFY EXISTING CONDITIONS OF FENCE PRIOR TO CONSTRUCTION TO DETERMINE IF FENCE CAN BE SALVAGED AND REUSED. FENCE SALVAGING MUST BE APPROVED BY COR.
6. FILL EROSION REPAIR AREAS. ASSUME 55 CY OF FILL AT EACH EROSION AREA.

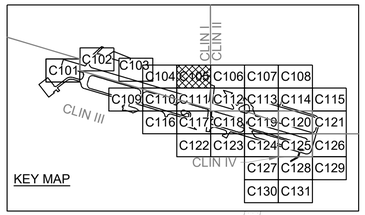

MATCH LINE - SEE SHEET C-104

SEE SHEET C-106

MATCH LINE - SEE SHEET C-111

566

749

750

12" RCP

S-400
JB
TOP=1000.25
INV IN=994.82 (E)

75' IMPERVIOUS BUFFER

50' COUNTY BUFFER

25' STATE BUFFER

APPROXIMATE END OF 24"RCP (PER SURVEY REF. #2) INV ±971.3

LIMITS OF GROUND-RUN TOPOGRAPHY (SURVEY DATE: 10/13/23)

CREEK

LOD

S-150
HW
DEMOLISH AND REPLACE HEADWALLL AND INSTALL SECURITY GRATE
INV IN=971.30 (SW)
A1 C-507

HW 36"CMP INV 971.3

6' CHAIN LINK FENCE

REMOVE EXISTING 371 LF 36" CMP INSTALL 371 LF 36" RCP

SALVAGE AND REINSTALL EXISTING 6' CHAIN LINK FENCE. SECURE AIRFIELD THROUGHOUT CONSTRUCTION, PROVIDING A SECURE PERIMETER AT ALL TIMES.
A1 C-514

REPAIR GRADES FROM EROSION, COMPACT, AND RESOD AREA WITH GEOGRID REINFORCEMENT

ABANDONED SEWER PER PLANS

S-130
TO REMAIN

REPAIR ERODED SLOPES, COMPACT THE AREAS, AND RESOD ALL DISTURBED AREAS WITH GEOGRID REINFORCEMENT. REMOVE EXISTING TREES WITHIN THE LIMITS OF DISTURBANCE.

S-341
JB
TOP=986.34
INV IN=977.55 (SW)
INV OUT=972.77 (NE)

S-340
HW
INSTALL SECURITY GRATE
INV=972.40 (SW)
A1 C-507

REMOVE 6' CHAIN LINK FENCE.

S-333
JB
TOP=976.93
INV IN=970.37 (S)
INV OUT=965.74 (NE)

S-334
HW
INSTALL SECURITY GRATE
TOP=968.79
INV IN=965.50 (SW)
A1 C-507

55 LF 30" RCP

REINSTALL SALVAGED 6' CHAIN LINK FENCE IN LINE WITH EXISTING PERIMETER FENCE. DISPOSE EXCESS FENCE OFF BASE PROPERTY.

NEW 18 LF 30" RCP
NEW 33 LF 30" RCP
REMOVE EXISTING 21 LF 24" RCP

S-330
DI NEW INLET
REPLACE STRUCTURE
TOP=991.99
INV OUT=978.21 (NE)

REMOVE AND SALVAGE EXISTING 6' CHAIN LINK FENCE. SECURE AIRFIELD THROUGHOUT CONSTRUCTION, PROVIDING A SECURE PERIMETER AT ALL TIMES
A1 C-514

REPAIR GRADES FROM EROSION, COMPACT, AND RESOD AREA WITH GEOGRID REINFORCEMENT

REPAIR ERODED GRADES, COMPACT THE AREA, AND RESOD ALL DISTURBED SECTIONS WITH GEOGRID REINFORCEMENT. REMOVE EXISTING TREES WITHIN THE LIMITS OF DISTURBANCE.

CRITICAL WOODED AREA

6' CHAIN LINK FENCE & TREE LINE

REMOVE 6' CHAIN LINK FENCE.

S-332
REMOVE AND REPLACE DI
TOP=989.61
INV OUT=971.47 (N)
A1 C-514

S-333
JB
TOP=976.93
INV IN=970.37 (S)
INV OUT=965.74 (NE)

12 LF 30" RCP

PS9

WL8

INSTALL RIPRAP AT INVERT
A4 C-505

S-270
DEMOLISH AND REPLACE EXISTING HEADWALL AND INSTALL ENERGY DISSIPATOR HEADWALL WITH SECURITY GRATE
INV IN=970.90 (SE)
A1 C-503
A1 C-507

REMOVE AND REINSTALL EXISTING 6' CHAIN LINK FENCE. SECURE AIRFIELD THROUGHOUT CONSTRUCTION, PROVIDING A SECURE PERIMETER AT ALL TIMES.
A1 C-514

SEE ENLARGEMENT PLAN C-401

S-260
HW
DEMOLISH AND REPLACE EXISTING HEADWALL AND INSTALL SECURITY GRATE
INV IN=970.90 (S)
A1 C-507

CMP TO BE LINED 401 LF 18" CMP

REMOVE EXISTING 413 LF 30"CMP AND INSTALL 413 LF 30" RCP

SOD DISTURBED AREA

BENCHMARK "GOD NAIL"
GEOID#3888
N 1,125,055.94

A1 STORM DRAINAGE PLAN

SCALE: 1" = 50'

0 25' 50' 100' 150'

NORTH

US Army Corps of Engineers®
Louisville District

TANYA NORMAN, P.E.
P.E. No. 0038055, GA

GEORGIA REGISTERED No. PE0038055 PROFESSIONAL ENGINEER TANYA L. NORMAN

DATE: 01/09/2026

MARK	DESCRIPTION	DATE

DESIGNED BY: T. NORMAN
DRAWN BY: J.P. ARISTIZABAL
CHECKED BY: D.M. LECKIE
SUBMITTED BY: A. ZEHR
SIZE: ANSI D
ISSUE DATE: JANUARY 9, 2026
SOLICITATION NO.:
CONTRACT NO.:
FILE NUMBER: 1230216
FILE NAME: 470584-C-101(A).dwg

U.S. ARMY CORPS OF ENGINEERS
LOUISVILLE DISTRICT
LOUISVILLE, KENTUCKY 40210-0059

POND & COMPANY
SUITE 500 RAVINIA LANE
ATLANTA, GEORGIA 30092
PHONE (678) 336-2104
FAX (404) 745-1275
POND

REPAIR & MAINTAIN AIRFIELD STORMWATER SYSTEM PHASE II
DOBBINS AIR RESERVE BASE, GEORGIA
PROJECT NO.: FGWB 21-0002 & FGWB 25-0006
P2#: 470584

STORM DRAINAGE PLAN

SHEET ID
C-105

CERTIFIED FINAL

FILE PATH: X:\FY23\123021804.CAD\BIM\04.02.CAD_PH 2 SHEETS\470584-C-101(A) PLOTTED: 01/09/2026 BY: NORMAN, TANYA

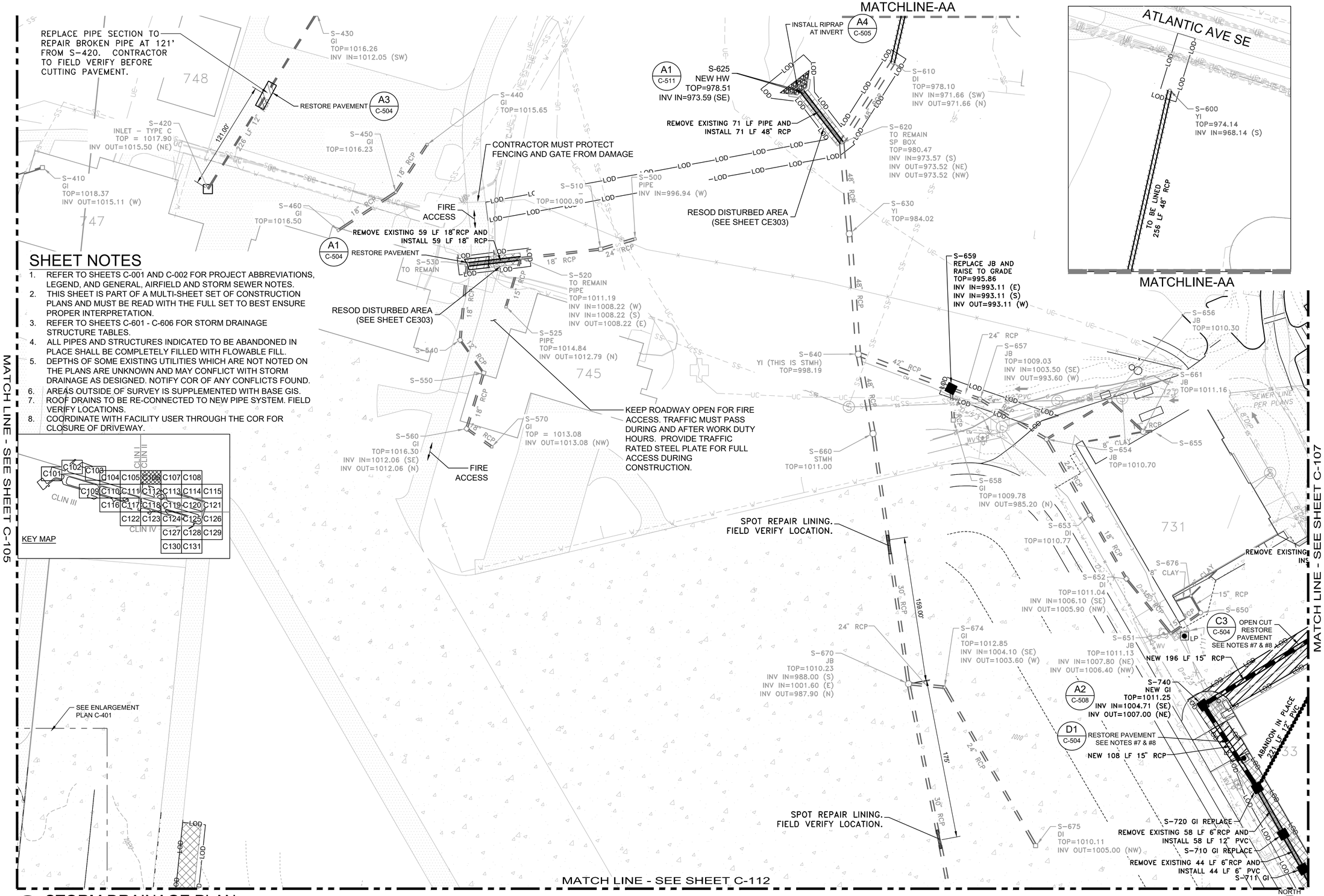

SHEET NOTES

1. REFER TO SHEETS C-001 AND C-002 FOR PROJECT ABBREVIATIONS, LEGEND, AND GENERAL, AIRFIELD AND STORM SEWER NOTES.
2. THIS SHEET IS PART OF A MULTI-SHEET SET OF CONSTRUCTION PLANS AND MUST BE READ WITH THE FULL SET TO BEST ENSURE PROPER INTERPRETATION.
3. REFER TO SHEETS C-601 - C-606 FOR STORM DRAINAGE STRUCTURE TABLES.
4. ALL PIPES AND STRUCTURES INDICATED TO BE ABANDONED IN PLACE SHALL BE COMPLETELY FILLED WITH FLOWABLE FILL.
5. DEPTHS OF SOME EXISTING UTILITIES WHICH ARE NOT NOTED ON THE PLANS ARE UNKNOWN AND MAY CONFLICT WITH STORM DRAINAGE AS DESIGNED. NOTIFY COR OF ANY CONFLICTS FOUND.
6. AREAS OUTSIDE OF SURVEY IS SUPPLEMENTED WITH BASE GIS.
7. ROOF DRAINS TO BE RE-CONNECTED TO NEW PIPE SYSTEM. FIELD VERIFY LOCATIONS.
8. COORDINATE WITH FACILITY USER THROUGH THE COR FOR CLOSURE OF DRIVEWAY.

A1 STORM DRAINAGE PLAN
SCALE: 1" = 50'

FILE PATH: X:\FY23\12302\604.CAD BIM\04.02.CAD_PH 2 SHEETS\A170584-C-101(A) PLOTTED: 01/09/2026 BY: NORMAN, TANYA

US Army Corps of Engineers®
Louisville District

TANYA NORMAN, P.E.
P.E. No. 0038055, GA
GEORGIA REGISTERED No. PE0038055 PROFESSIONAL ENGINEER TANYA L. NORMAN
DATE: 01/09/2026

MARK	DESCRIPTION	DATE

DESIGNED BY: T. NORMAN
DRAWN BY: J.P. ARISTIZABAL
CHECKED BY: D.M. LECKIE
SUBMITTED BY: A. ZELENKA
ANSI D
ISSUE DATE: JANUARY 9, 2026
SOLICITATION NO.:
CONTRACT NO.:
FILE NUMBER: 423026
FILE NAME: 470584-C-101(A).dwg

U.S. ARMY CORPS OF ENGINEERS
LOUISVILLE DISTRICT
LOUISVILLE, KENTUCKY 40210-0059

POND
POND
3530 PIEDMONT ROAD
SUITE 300
PEACHTREE CORNERS, GA 30305
PHONE (678) 336-2749
POND@POND.COM

REPAIR & MAINTAIN AIRFIELD STORMWATER SYSTEM
PHASE II
DOBBINS AIR RESERVE BASE, GEORGIA
PROJECT NO.: FGWB 21-0002 & FGWB 25-0006
P2#: 470584

STORM DRAINAGE PLAN

SHEET ID
C-106

CERTIFIED FINAL

SHEET NOTES

1. REFER TO SHEETS C-001 AND C-002 FOR PROJECT ABBREVIATIONS, LEGEND, AND GENERAL, AIRFIELD AND STORM SEWER NOTES.
2. THIS SHEET IS PART OF A MULTI-SHEET SET OF CONSTRUCTION PLANS AND MUST BE READ WITH THE FULL SET TO BEST ENSURE PROPER INTERPRETATION.
3. REFER TO SHEETS C-601 - C-606 FOR STORM DRAINAGE STRUCTURE TABLES.
4. ALL PIPES AND STRUCTURES INDICATED TO BE ABANDONED IN PLACE SHALL BE COMPLETELY FILLED WITH FLOWABLE FILL.
5. DEPTHS OF SOME EXISTING UTILITIES WHICH ARE NOT NOTED ON THE PLANS ARE UNKNOWN AND MAY CONFLICT WITH STORM DRAINAGE AS DESIGNED. NOTIFY COR OF ANY CONFLICTS FOUND.

KEY MAP

CLIN I | CLIN II | CLIN III | CLIN IV

C101 C102 C103 C104 C105 C106 C107 C108
C109 C110 C111 C112 C113 C114 C115
C116 C117 C118 C119 C120 C121
C122 C123 C124 C125 C126
C127 C128 C129
C130 C131

MATCH LINE - SEE SHEET C-106

MATCH LINE - SEE SHEET C-108

MATCH LINE - SEE SHEET C-113

A1 STORM DRAINAGE PLAN
SCALE: 1" = 50'

NORTH

0 25' 50' 100' 150'

US Army Corps of Engineers®
Louisville District

TANYA NORMAN, P.E.
P.E. No. 0038055, GA

GEORGIA REGISTERED No. PE038055 PROFESSIONAL ENGINEER TANYA L. NORMAN

DATE: 01/09/2026

MARK	DESCRIPTION	DATE

ISSUE DATE: JANUARY 9, 2026
SOLICITATION NO.:
CONTRACT NO.:
FILE NUMBER: 1230218

DESIGNED BY: T. NORMAN
DRAWN BY: J.P. ARISTIZABAL
CHECKED BY: D.M. LECKIE
SUBMITTED BY: A. DUERR
ANSI D
FILE NAME: 470584-C-101(A).dwg

U.S. ARMY CORPS OF ENGINEERS
LOUISVILLE DISTRICT
LOUISVILLE, KENTUCKY 40210-0059

POND
3121 BENTON GRAHAM
SUITE 300
LILBURN, GEORGIA 30047
PHONE (770) 925-0752
POND & COMPANY

REPAIR & MAINTAIN AIRFIELD STORMWATER SYSTEM
PHASE II
DOBBINS AIR RESERVE BASE, GEORGIA
PROJECT NO.: FGWB 21-0002 & FGWB 25-0006
P2#: 470584

STORM DRAINAGE PLAN

SHEET ID
C-107

FILE PATH: X:\FY23\123021804.CAD BIM\04.02.CADD_PH 2 SHEETS\470584-C-101(A) PLOTTED: 01/09/2026 BY: NORMAN, TANYA

CERTIFIED FINAL

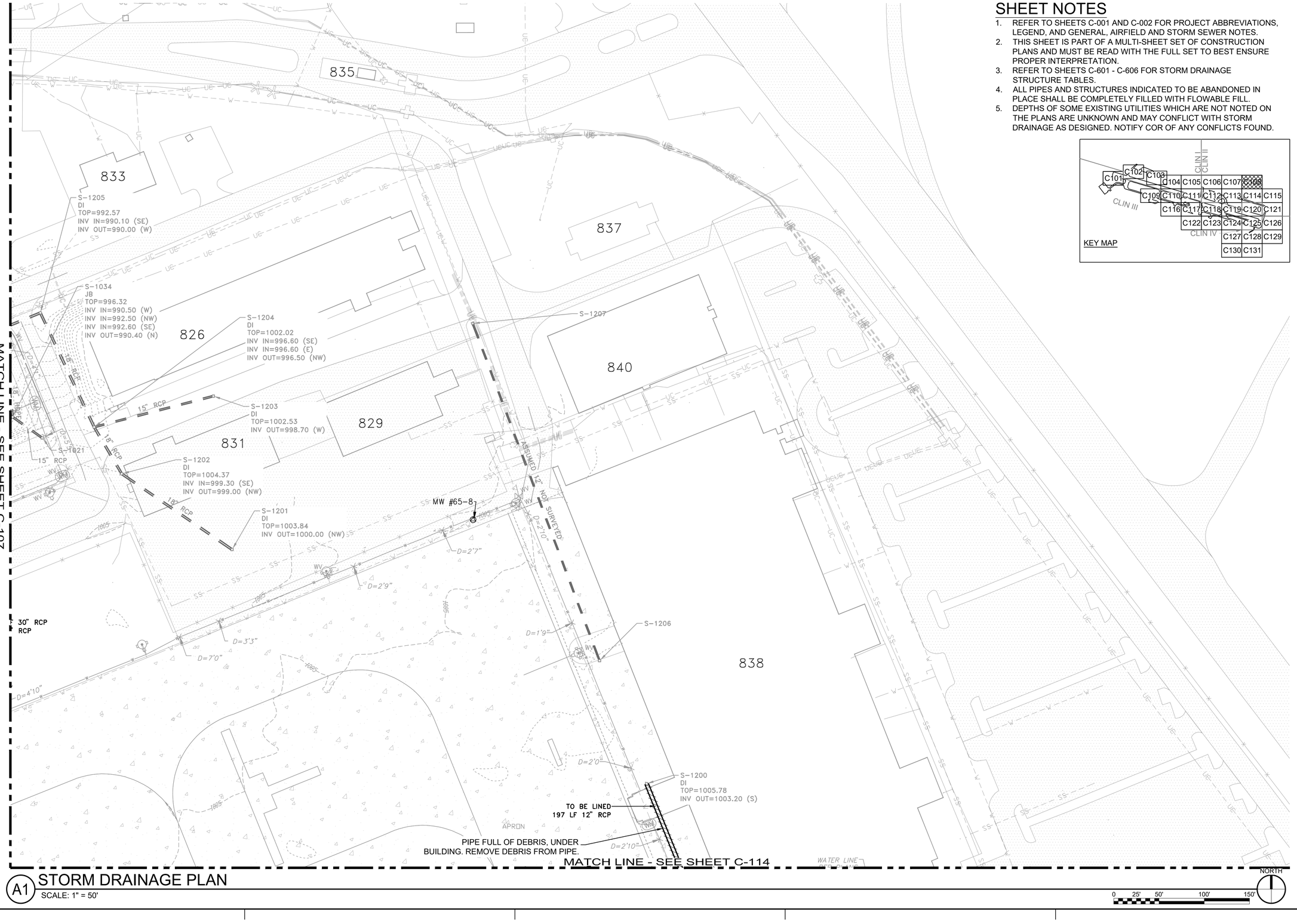

SHEET NOTES

1. REFER TO SHEETS C-001 AND C-002 FOR PROJECT ABBREVIATIONS, LEGEND, AND GENERAL, AIRFIELD AND STORM SEWER NOTES.
2. THIS SHEET IS PART OF A MULTI-SHEET SET OF CONSTRUCTION PLANS AND MUST BE READ WITH THE FULL SET TO BEST ENSURE PROPER INTERPRETATION.
3. REFER TO SHEETS C-601 - C-606 FOR STORM DRAINAGE STRUCTURE TABLES.
4. ALL PIPES AND STRUCTURES INDICATED TO BE ABANDONED IN PLACE SHALL BE COMPLETELY FILLED WITH FLOWABLE FILL.
5. DEPTHS OF SOME EXISTING UTILITIES WHICH ARE NOT NOTED ON THE PLANS ARE UNKNOWN AND MAY CONFLICT WITH STORM DRAINAGE AS DESIGNED. NOTIFY COR OF ANY CONFLICTS FOUND.

KEY MAP

A1 STORM DRAINAGE PLAN
SCALE: 1" = 50'

US Army Corps of Engineers®
Louisville District

TANYA NORMAN, P.E.
P.E. No. 0038055, GA

GEORGIA REGISTERED No. PE038055 PROFESSIONAL ENGINEER TANYA L. NORMAN

DATE: 01/09/2026

MARK	DESCRIPTION	DATE

DESIGNED BY: T. NORMAN
DRAWN BY: J.P. ARISTIZABAL
CHECKED BY: D.M. LECKIE
SUBMITTED BY: A. DUEHR
SIZE: ANSI D
FILE NAME: 470584-C-101(A).dwg
ISSUE DATE: JANUARY 9, 2026
SOLICITATION NO.:
CONTRACT NO.:
FILE NUMBER: 4230218

U.S. ARMY CORPS OF ENGINEERS
LOUISVILLE DISTRICT
LOUISVILLE, KENTUCKY 40210-0059

POND
3500 PARKWAY LANE
SUITE 500
PEACHTREE CORNERS, GA 30092
PHONE (678) 336-7740
POND JOB No. 1230218

REPAIR & MAINTAIN AIRFIELD STORMWATER SYSTEM
PHASE II
DOBBINS AIR RESERVE BASE, GEORGIA
PROJECT NO.: FGWB 21-0002 & FGWB 25-0006
P2#: 470584

STORM DRAINAGE PLAN

SHEET ID
C-108

CERTIFIED FINAL

FILE PATH: X:\FY23\1230218\04.CAD BIM\04.02.CAD_PH 2 SHEETS\470584-C-101(A) PLOTTED: 01/09/2026 BY: NORMAN, TANYA

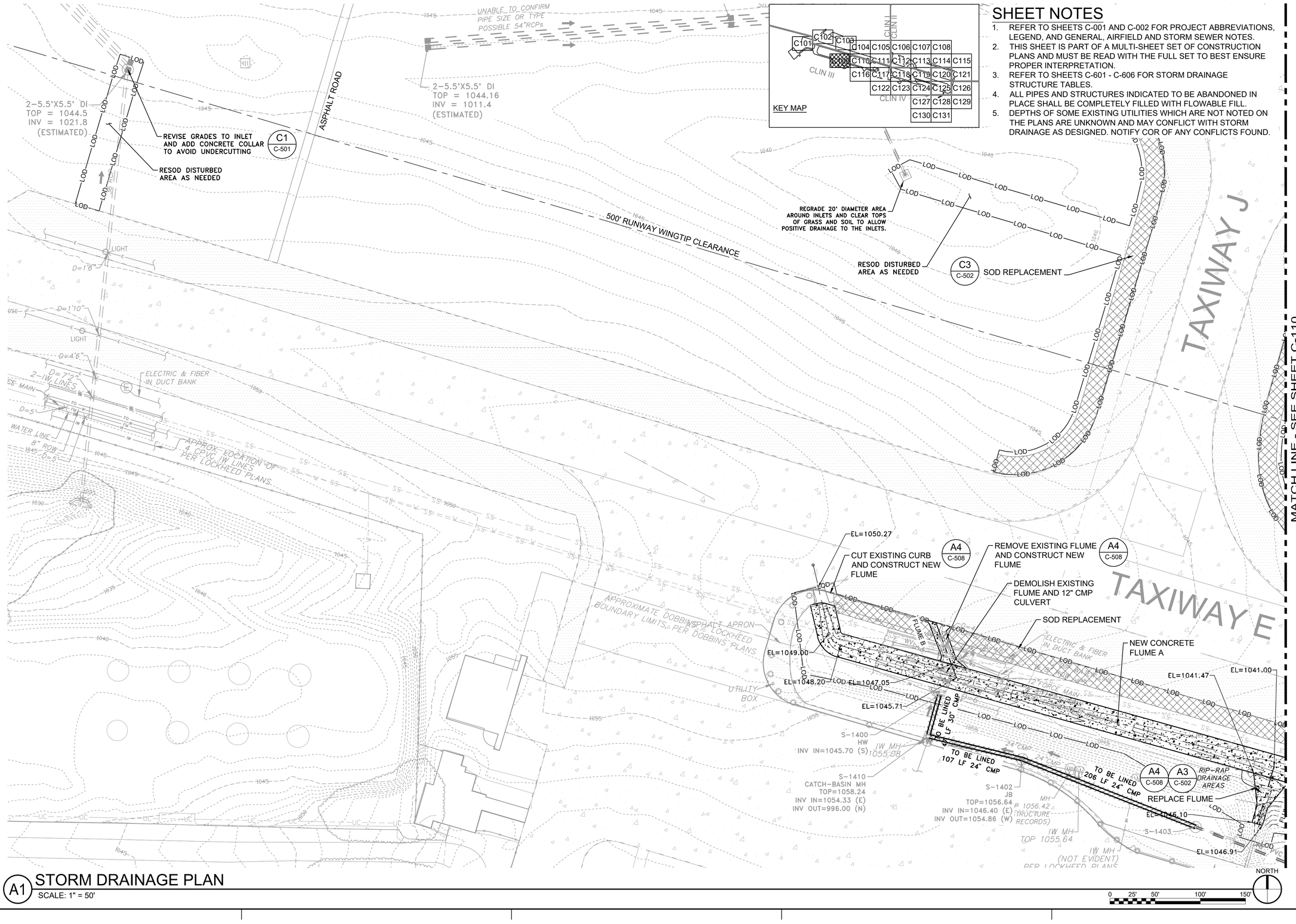

SHEET NOTES

1. REFER TO SHEETS C-001 AND C-002 FOR PROJECT ABBREVIATIONS, LEGEND, AND GENERAL, AIRFIELD AND STORM SEWER NOTES.
2. THIS SHEET IS PART OF A MULTI-SHEET SET OF CONSTRUCTION PLANS AND MUST BE READ WITH THE FULL SET TO BEST ENSURE PROPER INTERPRETATION.
3. REFER TO SHEETS C-601 - C-606 FOR STORM DRAINAGE STRUCTURE TABLES.
4. ALL PIPES AND STRUCTURES INDICATED TO BE ABANDONED IN PLACE SHALL BE COMPLETELY FILLED WITH FLOWABLE FILL.
5. DEPTHS OF SOME EXISTING UTILITIES WHICH ARE NOT NOTED ON THE PLANS ARE UNKNOWN AND MAY CONFLICT WITH STORM DRAINAGE AS DESIGNED. NOTIFY COR OF ANY CONFLICTS FOUND.

A1 STORM DRAINAGE PLAN
SCALE: 1" = 50'

0 25' 50' 100' 150'

NORTH

US Army Corps of Engineers®
Louisville District

TANYA NORMAN, P.E.
P.E. No. 0038055, GA
REGISTERED No. PE038055 PROFESSIONAL ENGINEER
TANYA L. NORMAN
DATE: 01/09/2026

MARK	DESCRIPTION	DATE

DESIGNED BY: T. NORMAN
DRAWN BY: J.P. ARISTIZABAL
CHECKED BY: D.M. LECKIE
SUBMITTED BY: A. DUERR
SIZE: ANSI D
ISSUE DATE: JANUARY 9, 2026
SOLICITATION NO.:
CONTRACT NO.:
FILE NUMBER: 1230216
FILE NAME: 470584-C-101(A).dwg

U.S. ARMY CORPS OF ENGINEERS
LOUISVILLE DISTRICT
LOUISVILLE, KENTUCKY 40210-0059

POND
3200 SOUTHWAY LANE
SUITE 500/600/700
PHONE (678) 336-2700
FAX (678) 336-2710
POND

REPAIR & MAINTAIN AIRFIELD STORMWATER SYSTEM
PHASE II
DOBBINS AIR RESERVE BASE, GEORGIA
PROJECT NO.: FGWB 21-0002 & FGWB 25-0006
P2#: 470584

STORM DRAINAGE PLAN

SHEET ID
C-109

FILE PATH: X:\FY26\123021804.CAD BIM\04.02.CAD_PH 2 SHEETS\470584-C-101(A) PLOTTED: 01/09/2026 BY: NORMAN, TANYA

CERTIFIED FINAL

SHEET NOTES

1. REFER TO SHEETS C-001 AND C-002 FOR PROJECT ABBREVIATIONS, LEGEND, AND GENERAL, AIRFIELD AND STORM SEWER NOTES.
2. THIS SHEET IS PART OF A MULTI-SHEET SET OF CONSTRUCTION PLANS AND MUST BE READ WITH THE FULL SET TO BEST ENSURE PROPER INTERPRETATION.
3. REFER TO SHEETS C-601 - C-606 FOR STORM DRAINAGE STRUCTURE TABLES.
4. ALL PIPES AND STRUCTURES INDICATED MUST BE ABANDONED IN PLACE SHALL BE COMPLETELY FILLED WITH FLOWABLE FILL.
5. DEPTHS OF SOME EXISTING UTILITIES WHICH ARE NOT NOTED ON THE PLANS ARE UNKNOWN AND MAY CONFLICT WITH STORM DRAINAGE AS DESIGNED. NOTIFY COR OF ANY CONFLICTS FOUND.

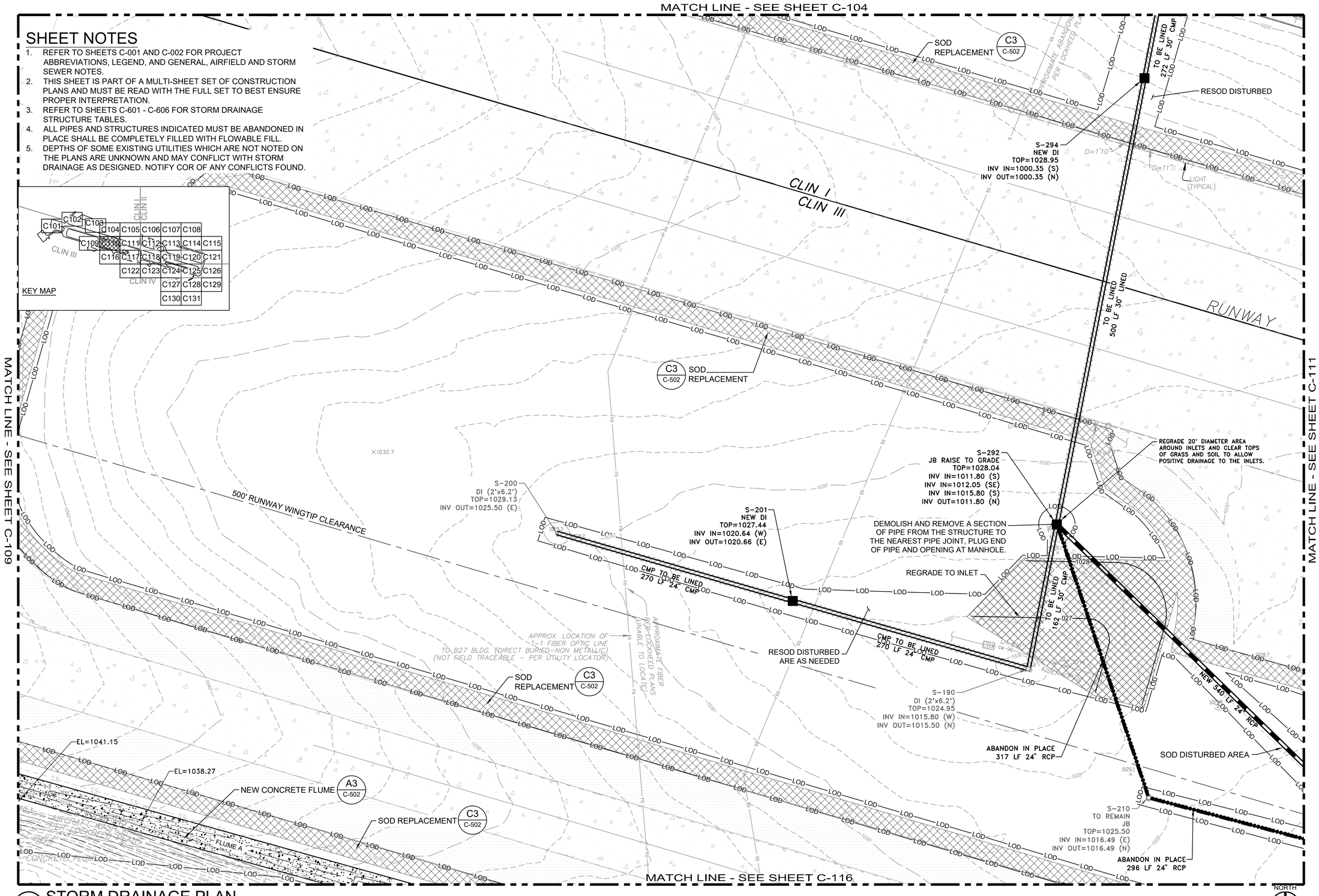

A1 STORM DRAINAGE PLAN
SCALE: 1" = 50'

US Army Corps of Engineers®
Louisville District

TANYA NORMAN, P.E.
P.E. No. 0038055, GA

GEORGIA REGISTERED No. PE038055 PROFESSIONAL ENGINEER TANYA L. NORMAN

DATE: 01/09/2026

MARK	DESCRIPTION	DATE

U.S. ARMY CORPS OF ENGINEERS
LOUISVILLE DISTRICT
LOUISVILLE, KENTUCKY 40210-0059

POND
3500 PARKWAY LANE
SUITE 500
PEACHTREE CORNERS, GA 30092
PHONE (678) 336-7710
POND JOB No. 1230218

DESIGNED BY: T. NORMAN
DRAWN BY: J.P. ARISTIZABAL
CHECKED BY: D.M. LECKIE
SUBMITTED BY: A. DUEHR
SIZE: ANSI D
ISSUE DATE: JANUARY 9, 2026
SOLICITATION NO.:
CONTRACT NO.:
FILE NUMBER: 4230218
FILE NAME: 470584-C-101(B).dwg

REPAIR & MAINTAIN AIRFIELD STORMWATER SYSTEM
PHASE II
DOBBINS AIR RESERVE BASE, GEORGIA
PROJECT NO.: FGWB 21-0002 & FGWB 25-0006
P2#: 470584

STORM DRAINAGE PLAN

SHEET ID
C-110

CERTIFIED FINAL

FILE PATH: X:\FY23\1230218\04.CAD BIM\04.02.CAD_PH 2 SHEETS\470584-C-101(B) PLOTTED: 01/09/2026 BY: NORMAN, TANYA

MATCH LINE - SEE SHEET C-105

MATCH LINE - SEE SHEET C-110

MATCH LINE - SEE SHEET C-112

MATCH LINE - SEE SHEET C-117

TOP=1021.93
INV OUT=1018.60 (W)

500' RUNWAY WINGTIP CLEARANCE

CMP TO BE LINED
401 LF 18" CMP

SEE ENLARGEMENT
PLAN C-401

BECHMARK " 60D NAIL"
GEO #3888
N:1,425,055.9
e:2,190,765.1
ELEV=1,019.04

S-290
JB 6.5 DIA
RAISE TOP
TOP=1013.50
INV IN=999.00 (SE)
INV OUT=999.00 (NW)

CMP TO BE LINED
128 LF 30" RCP

S-230
DI (1.9'x3')
TOP=1020.59
INV OUT=1017.20 (E)

CMP TO BE LINED
360 LF 18" CMP

S-240
DI (2'x3')
TOP=1018.32
INV IN=998.90 (W)
INV IN=998.90 (E)
INV OUT=998.80 (N)

SOD DISTURBED
AREA AS NEEDED

S-293
DI NEW INLET
TOP=1018.11
INV IN=999.80 (SE)
INV OUT=999.80 (NW)

ACCESS ROAD

CMP TO BE LINED
371 LF 18" CMP

SOD
REPLACEMENT C3 C-502

S-250
DI (2'x6.2')
TOP=1017.84
INV OUT=1013.90 (W)

KEY MAP
C101 C102 C103 C104 C105 C106 C107 C108
C109 C110 C111 C112 C113 C114 C115
C116 C117 C118 C119 C120 C121
C122 C123 C124 C125 C126
C127 C128 C129
C130 C131
CLIN I
CLIN II
CLIN III
CLIN IV

SHEET NOTES

1. REFER TO SHEETS C-001 AND C-002 FOR PROJECT ABBREVIATIONS, LEGEND, AND GENERAL, AIRFIELD AND STORM SEWER NOTES.
2. THIS SHEET IS PART OF A MULTI-SHEET SET OF CONSTRUCTION PLANS AND MUST BE READ WITH THE FULL SET TO BEST ENSURE PROPER INTERPRETATION.
3. REFER TO SHEETS C-601 - C-606 FOR STORM DRAINAGE STRUCTURE TABLES.
4. ALL PIPES AND STRUCTURES INDICATED MUST BE ABANDONED IN PLACE SHALL BE COMPLETELY FILLED WITH FLOWABLE FILL.
5. DEPTHS OF SOME EXISTING UTILITIES WHICH ARE NOT NOTED ON THE PLANS ARE UNKNOWN AND MAY CONFLICT WITH STORM DRAINAGE AS DESIGNED. NOTIFY COR OF ANY CONFLICTS FOUND.

SOD DISTURBED
AREA

S-220
NEW DI'
TOP=1024.87
INV IN=1018.35 (S)
INV OUT=1017.60 (NW)

NEW 540 LF 24" RCP

GRADE IN NEW SWALE
(CONSTRUCT AND
STABILIZE IN SAME DAY) A4 C-503

EL=1025.09
EL=1025.30
EL=1028.09

SOD
REPLACEMENT C3 C-502

REPLACE EXSITING INLET

S-1900
DI (2'x2.9')
TOP=1020.43
INV OUT=1013.80 (E)

SOD
REPLACEMENT C3 C-502

SOD
REPLACEMENT C3 C-502

CLIN I
CLIN III

A1 STORM DRAINAGE PLAN
SCALE: 1" = 50'

NORTH

0 25' 50' 100' 150'

US Army Corps of Engineers®
Louisville District

TANYA NORMAN, P.E.
P.E. No. 0038055, GA

GEORGIA REGISTERED No. PE038055 PROFESSIONAL ENGINEER TANYA L. NORMAN

DATE: 01/09/2026

MARK	DESCRIPTION	DATE

DESIGNED BY: T. NORMAN
DRAWN BY: J.P. ARISTIZABAL
CHECKED BY: D.M. LECKIE
SUBMITTED BY: A. ZIEHR
ANSI D

ISSUE DATE: JANUARY 9, 2026
SOLICITATION NO.:
CONTRACT NO.:
FILE NUMBER: 4230216
FILE NAME: 470584-C-101(B).dwg

U.S. ARMY CORPS OF ENGINEERS
LOUISVILLE DISTRICT
LOUISVILLE, KENTUCKY 40210-0059

POND
POND
3025 SHOAL CREEK PARKWAY
SUITE 300
AUSTIN, TEXAS 78758
PHONE (678) 336-2104
POND.COM/TEXAS

REPAIR & MAINTAIN AIRFIELD STORMWATER SYSTEM
PHASE II
DOBBINS AIR RESERVE BASE, GEORGIA
PROJECT NO.: FGWB 21-0002 & FGWB 25-0006
P2#: 470584

STORM DRAINAGE PLAN

SHEET ID
C-111

CERTIFIED FINAL

FILE PATH: X:\FY23\123021804.CAD BIM\04.02.CAD_PH 2 SHEETS\470584-C-101(B) PLOTTED: 01/09/2026 BY: NORMAN, TANYA

MATCH LINE - SEE SHEET C-106

MATCH LINE - SEE SHEET C-111

MATCH LINE - SEE SHEET C-113

MATCH LINE - SEE SHEET C-118

SEE ENLARGEMENT PLAN C-401

TO BE LINED
398 LF 30" RCP

TO BE LINED
78 LF 15" CMP

S-305
DI (2.5'x2')
TOP=1017.48
INV OUT=1013.60 (SW)

18" RCP

S-300
DI (3.7'x2.8')
TOP=1017.96
INV IN=1005.30 (E)
INV IN=1004.20 (SE)
INV IN=1010.30 (NE)
INV OUT=1003.90 (NW)

REMOVE EXISTING 90 LF 30"RCP AND
INSTALL 90 LF 30" RCP

S-320
REPLACE TOP
TOP=1018.00
INV OUT=1004.90 (NW)

A2 / C-508

SOD REPLACEMENT

C3 / C-502

A3 / C-502
260 LF CONCRETE FLUME
TO WEIR CUT INTO INLET
IN S-692

N=1424981.51
E=2191436.15

S-310
DI (7.4'x2.8')
TOP=1014.77
INV OUT=1009.30 (W)

N=1424538.15
E=2191584.31

C3 / C-501
A2 / C-508
S-692
DI (3'x11.2')
LOWER
TOP=1011.95
INV IN=1007.90 (SE)
INV IN=1007.90 (SE)
INV OUT=1007.80 (E)

ACCESS ROAD

80 LF 6" CPP

SOD DISTURBED AREA

REMOVE EXISTING
6" CPP

500' RUNWAY WINGTIP CLEARANCE

30" RCP

LIGHT (TYPICAL)

LOWER SPOT
~1014.7

NEW 286 LF 15" RCP

A3 / C-504
RESTORE
PAVEMENT

C3 / C-502
SOD DISTURBED
AREA

S-994
NEW DI
TOP=1013.71
INV OUT=1011.58 (NW)

A2 / C-508

CLIN II
CLIN III

TAXIWAY G

TAXIWAY A

TAXIWAY B

C3 / C-502
SOD
REPLACEMENT

SOD DISTURBED
AREA

S-680
REMOVE AND REPLACE
4'x6' CONC. LID
TOP=1011.42
INV IN=999.32 (S)
INV OUT=999.32 (N)

A2 / C-508

S-690
TO REMAIN
2xDI (1.8'x2.8')
TOP=1013.15
INV IN=1003.60 (W)
INV IN=1008.80 (E)
INV IN=1003.80 (SE)
INV IN=1004.10 (S)
INV OUT=1003.10 (N)

REMOVE EXISTING 121 LF 8"CPP AND
INSTALL 121 LF 12" RCP

S-698
DI (1.8'x2.8')
REPLACE TOP
TOP=1013.15
INV OUT=1010.40 (W)

A2 / C-508

REPLACE ASPHALT
A3 / C-504

30" RCP

358 LF 24" RCP

CLEAN
EXISTING 24"
RCP

24" RCP

C3 / C-502
SOD
REPLACEMENT

KEY MAP

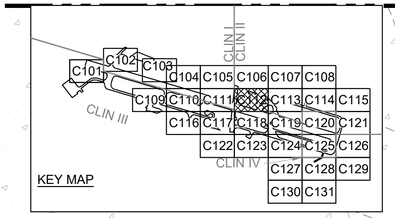

SHEET NOTES

1. REFER TO SHEETS C-001 AND C-002 FOR PROJECT ABBREVIATIONS, LEGEND, AND GENERAL, AIRFIELD AND STORM SEWER NOTES.
2. THIS SHEET IS PART OF A MULTI-SHEET SET OF CONSTRUCTION PLANS AND MUST BE READ WITH THE FULL SET TO BEST ENSURE PROPER INTERPRETATION.
3. REFER TO SHEETS C-601 - C-606 FOR STORM DRAINAGE STRUCTURE TABLES.
4. ALL PIPES AND STRUCTURES INDICATED MUST BE ABANDONED IN PLACE SHALL BE COMPLETELY FILLED WITH FLOWABLE FILL.
5. DEPTHS OF SOME EXISTING UTILITIES WHICH ARE NOT NOTED ON THE PLANS ARE UNKNOWN AND MAY CONFLICT WITH STORM DRAINAGE AS DESIGNED. NOTIFY COR OF ANY CONFLICTS FOUND.

A1 STORM DRAINAGE PLAN
SCALE: 1" = 50'

NORTH

0 25' 50' 100' 150'

US Army Corps of Engineers®
Louisville District

TANYA NORMAN, P.E.
P.E. No. 0038055, GA

GEORGIA REGISTERED No. PE038055 PROFESSIONAL ENGINEER TANYA L. NORMAN

DATE: 01/09/2026

MARK	DESCRIPTION	DATE

DESIGNED BY: T. NORMAN
DRAWN BY: J.P. ARISTIZABAL
CHECKED BY: D.M. LECKIE
SUBMITTED BY: A. BEHLE
SIZE: ANSI D
ISSUE DATE: JANUARY 9, 2026
SOLICITATION NO.:
CONTRACT NO.:
FILE NUMBER: 4230216
FILE NAME: 470584-C-101(B).dwg

U.S. ARMY CORPS OF ENGINEERS
LOUISVILLE DISTRICT
LOUISVILLE, KENTUCKY 40210-0059

POND
POND & COMPANY
SUITE 500 RIVERWAY LANE
PHONE (678) 336-2749
FAX (678) 336-2753

REPAIR & MAINTAIN AIRFIELD STORMWATER SYSTEM
PHASE II
DOBBINS AIR RESERVE BASE, GEORGIA
PROJECT NO.: FGWB 21-0002 & FGWB 25-0006
P2#: 470584

STORM DRAINAGE PLAN

SHEET ID
C-112

CERTIFIED FINAL

FILE PATH: X:\FY23\123021604.CAD\BIM\04.02.CAD_PH 2 SHEETS\470584-C-101(B) PLOTTED: 01/09/2026 BY: NORMAN, TANYA

SEE SHEET C-106 FOR PIPE CONTINUATION

MATCH LINE - SEE SHEET C-107

S-700 GI
REMOVE EXISTING 63 LF 6"CPP AND INSTALL 63 LF 6" PVC
RESTORE PAVEMENT A3 C-504
737
738
2173
FIRE STATION
HVAC
SSMH TOP 1019.66 OUT 1003.1
S-820 S-840 S-830 S-825 S-813 S-814 S-818 S-815 S-816 S-810 S-841 S-842 S-800 S-934 S-933 S-935 S-900 GI TOP=1010.47 S-910 DI TOP=2.31
12" RCP 15" RCP 10" RCP 6" MEP 6" PVC 20 LF 12" PVC
GATE SENSOR
APRON
34 LF 15" RCP S-870
42 LF 15" RCP S-880
REMOVE EXISTING 176 LF 12"RCP AND INSTALL 176 LF 15" RCP
RESTORE PAVEMENT A3 C-504
S-930 TO REMAIN GI TOP=1009.49 INV IN=1004.42 (S) INV IN=1004.10 (W) INV OUT=1002.09 (NE)
S-920 DI TOP=2.31
8" CPP D=4'0"
S-1061 DI TOP=1007.19 INV OUT=1006.00 (S)
TRENCH DRAIN

SHEET NOTES

1. REFER TO SHEETS C-001 AND C-002 FOR PROJECT ABBREVIATIONS, LEGEND, AND GENERAL, AIRFIELD AND STORM SEWER NOTES.
2. THIS SHEET IS PART OF A MULTI-SHEET SET OF CONSTRUCTION PLANS AND MUST BE READ WITH THE FULL SET TO BEST ENSURE PROPER INTERPRETATION.
3. REFER TO SHEETS C-601 - C-606 FOR STORM DRAINAGE STRUCTURE TABLES.
4. ALL PIPES AND STRUCTURES INDICATED MUST BE ABANDONED IN PLACE SHALL BE COMPLETELY FILLED WITH FLOWABLE FILL.
5. DEPTHS OF SOME EXISTING UTILITIES WHICH ARE NOT NOTED ON THE PLANS ARE UNKNOWN AND MAY CONFLICT WITH STORM DRAINAGE AS DESIGNED. NOTIFY COR OF ANY CONFLICTS FOUND.

KEY MAP
CLIN I
CLIN II
CLIN III
CLIN IV
C101 C102 C103 C104 C105 C106 C107 C108 C109 C110 C111 C112 C113 C114 C115 C116 C117 C118 C119 C120 C121 C122 C123 C124 C125 C126 C127 C128 C129 C130 C131

SOD REPLACEMENT C3 C-502
TRENCH DRAIN
D=1'2"
D=1'6"
D=1'8"
D=1'0"
D=1'7"
SOD REPLACEMENT C3 C-502
EL=1011.18
S-696
GRADE IN NEW SWALE (CONSTRUCT AND STABILIZE IN ONE DAY) A4 C-503
SOD DISTURBED AREA
EL=1011.71
500' RUNWAY WINGTIP CLEARANCE
EL=1010.50
GRADE IN NEW SWALE (CONSTRUCT AND STABILIZE IN ONE DAY) A4 C-503
R=495.8
SOD DISTURBED AREA
SOD REPLACEMENT C3 C-502
TAXI

MATCH LINE - SEE SHEET C-112

MATCH LINE - SEE SHEET C-114

MATCH LINE - SEE SHEET C-119

A1 STORM DRAINAGE PLAN
SCALE: 1" = 50'

NORTH
0 25' 50' 100' 150'

US Army Corps of Engineers®
Louisville District

TANYA NORMAN, P.E.
P.E. No. 0038055, GA
GEORGIA REGISTERED No. PE038055 PROFESSIONAL ENGINEER TANYA L. NORMAN
DATE: 01/09/2026

MARK	DESCRIPTION	DATE

DESIGNED BY: T. NORMAN
DRAWN BY: J.P. ARISTIZABAL
CHECKED BY: D.M. LECKIE
SUBMITTED BY: A. DUERR
SIZE: ANSI D
ISSUE DATE: JANUARY 9, 2026
SOLICITATION NO.:
CONTRACT NO.:
FILE NUMBER: 1230216
FILE NAME: 470584-C-101(B).dwg

U.S. ARMY CORPS OF ENGINEERS
LOUISVILLE DISTRICT
LOUISVILLE, KENTUCKY 40210-0059

POND
3320 BUFORD HIGHWAY, SUITE 200
DULUTH, GEORGIA 30096
PHONE: (678) 336-2743
PHONE: (678) 336-2745
POND

REPAIR & MAINTAIN AIRFIELD STORMWATER SYSTEM
PHASE II
DOBBINS AIR RESERVE BASE, GEORGIA
PROJECT NO.: FGWB 21-0002 & FGWB 25-0006
P2#: 470584

STORM DRAINAGE PLAN

SHEET ID
C-113

CERTIFIED FINAL

FILE PATH: X:\PY23\123021804\CAD BIM\04.02.CAD_PH2 SHEETS\470584-C-101(B) PLOTTED: 01/09/2026 BY: NORMAN, TANYA

MATCH LINE - SEE SHEET C-108

MATCH LINE - SEE SHEET C-113

MATCH LINE - SEE SHEET C-115

MATCH LINE - SEE SHEET C-120

SHEET NOTES

1. REFER TO SHEETS C-001 AND C-002 FOR PROJECT ABBREVIATIONS, LEGEND, AND GENERAL, AIRFIELD AND STORM SEWER NOTES.
2. THIS SHEET IS PART OF A MULTI-SHEET SET OF CONSTRUCTION PLANS AND MUST BE READ WITH THE FULL SET TO BEST ENSURE PROPER INTERPRETATION.
3. REFER TO SHEETS C-601 - C-606 FOR STORM DRAINAGE STRUCTURE TABLES.
4. ALL PIPES AND STRUCTURES INDICATED MUST BE ABANDONED IN PLACE SHALL BE COMPLETELY FILLED WITH FLOWABLE FILL.
5. DEPTHS OF SOME EXISTING UTILITIES WHICH ARE NOT NOTED ON THE PLANS ARE UNKNOWN AND MAY CONFLICT WITH STORM DRAINAGE AS DESIGNED. NOTIFY COR OF ANY CONFLICTS FOUND.

KEY MAP

CLIN I, CLIN II, CLIN III, CLIN IV

C101 C102 C103 C104 C105 C106 C107 C108 C109 C110 C111 C112 C113 C114 C115 C116 C117 C118 C119 C120 C121 C122 C123 C124 C125 C126 C127 C128 C129 C130 C131

S-1100
S-1110 3'x3' STEEL LID TOP=1005.17 INV IN=994.30 (N) INV IN=1000.40 (E) INV OUT=994.30 (S)
S-1115 FES INV OUT=1001.50 (W)
S-1120 JB TOP=1004.65 INV IN=994.09 (N) INV IN=1000.10 (W) INV OUT=987.78 (E)
S-1125 DI (2.4'x4') TOP=1002.56 INV OUT=1000.20 (E)
S-1130 JB TOP=999.57 INV IN=987.10 (W) INV IN=989.60 (N) INV OUT=984.60 (S)
S-1210
S-1220
S-1230
S-1233
S-1234
S-1235
S-1240 GI TOP=1004.59 INV IN=1000.92 (N) INV IN=1000.60 (NE) INV OUT=1000.60 (S)
S-1241
S-1242
S-1245 GI TOP=1005.71 INV OUT=1004.12 (SW)
S-1250 GI TOP=1003.00 INV IN=998.80 (N) INV IN=999.90 (E) INV OUT=998.40 (S)
S-1254 GI TOP=1004.37
S-1255 GI TOP=1004.64
S-1260 GI TOP=1002.59 INV IN=998.20 (N) INV OUT=998.20 (E)
S-1270 GI TOP=1002.61 INV IN=993.78 (W) INV OUT=997.50 (S)
S-1280 DI (2.4'x4') TOP=996.74 INV IN=991.70 (N) INV OUT=990.60 (S)
S-1300 DI TOP=1000.44 INV IN=997.02 (NW) INV OUT=996.90 (SE)
S-1301 DI (FULL OF DEBRIS) TOP=1005.72 INV OUT=1002.36 (E)
S-1302 DI TOP=1005.52 INV IN=1002.00 (W) INV OUT=1001.90 (NE)
S-1303 DI TOP=1005.74 INV IN=1001.00 (SW) INV OUT=1000.90 (N)
S-1310 FES INV IN=990.20 (NW)
S-1311 DI TOP=1001.18 INV OUT=997.90 (NW)
S-1312 DI TOP=1002.57 INV IN=998.00 (SE) INV OUT=997.90 (SE)
S-1313 INACCESSIBLE TOP=1001.70 INV OUT=997.69 (SW)
S-1314 FES INV IN=997.00 (NE)
S-1325 TO REMAIN
S-1330 HW (REPLACE) INV IN=988.60 (N)

TO BE LINED 93 LF 36" RCP
TO BE LINED 209 LF 36" RCP
TO BE LINED 197 LF 12" RCP
TO BE LINED 95 LF 15" RCP
TO BE LINED 94 LF 15" RCP
TO BE LINED 162 LF 15" RCP
TO BE LINED 19 LF 15" RCP
TO BE LINED 91 LF 15" RCP
TO BE LINED 377 LF 48" RCP
TO BE LINED 93 LF 18" CMP

N=1424445.28
E=2194380.51

REGRADE 20' DIAMETER AREA AROUND INLETS AND CLEAR TOPS OF GRASS AND SOIL TO ALLOW POSITIVE DRAINAGE TO THE INLETS .

REMOVE EXISTING 67 LF 15"RCP AND INSTALL 67 LF 15" RCP
REMOVE EXISTING 21 LF 30" CMP AND INSTALL 21 LF 30" RCP

SOD REPLACEMENT — C3 / C-502
RESTORE PAVEMENT — A1 / C-504
REPLACE FLUME — A3 / C-502
REPAIR GRADES FROM EROSION, COMPACT AND RESOD DISTURBED AREAS — A1 / C-513

SEE ENLARGEMENT PLAN C-402

APPROXIMATE SEWER LINE PER DOBBINS PLANS

(NOT TRACEABLE)

A1 STORM DRAINAGE PLAN
SCALE: 1" = 50'

NORTH

0 25' 50' 100' 150'

US Army Corps of Engineers®
Louisville District

TANYA NORMAN, P.E.
P.E. No. 0038055, GA
GEORGIA REGISTERED No. PE038055 PROFESSIONAL ENGINEER TANYA L. NORMAN
DATE: 01/09/2026

MARK	DESCRIPTION	DATE

DESIGNED BY: T. NORMAN
DRAWN BY: J.P. ARISTIZABAL
CHECKED BY: D.M. LECKIE
SUBMITTED BY: A. DUERR
SIZE: ANSI D
ISSUE DATE: JANUARY 9, 2026
SOLICITATION NO.:
CONTRACT NO.:
FILE NUMBER: 1230216
FILE NAME: 470584-C-101(B).dwg

U.S. ARMY CORPS OF ENGINEERS
LOUISVILLE DISTRICT
LOUISVILLE, KENTUCKY 40210-0059

POND
POND & COMPANY
SUITE 300
1970 ORANGE TREE LANE
REDLANDS, CALIFORNIA 92374
PHONE (951) 320-7701
FAX (951) 320-7703

REPAIR & MAINTAIN AIRFIELD STORMWATER SYSTEM
PHASE II
DOBBINS AIR RESERVE BASE, GEORGIA
PROJECT NO.: FGWB 21-0002 & FGWB 25-0006
P2#: 470584

STORM DRAINAGE PLAN

SHEET ID
C-114

FILE PATH: X:\PY23\123021804\CAD BIM\04.02.CAD_PH 2 SHEETS\470584-C-101(B) PLOTTED: 01/09/2026 BY: NORMAN, TANYA

CERTIFIED FINAL

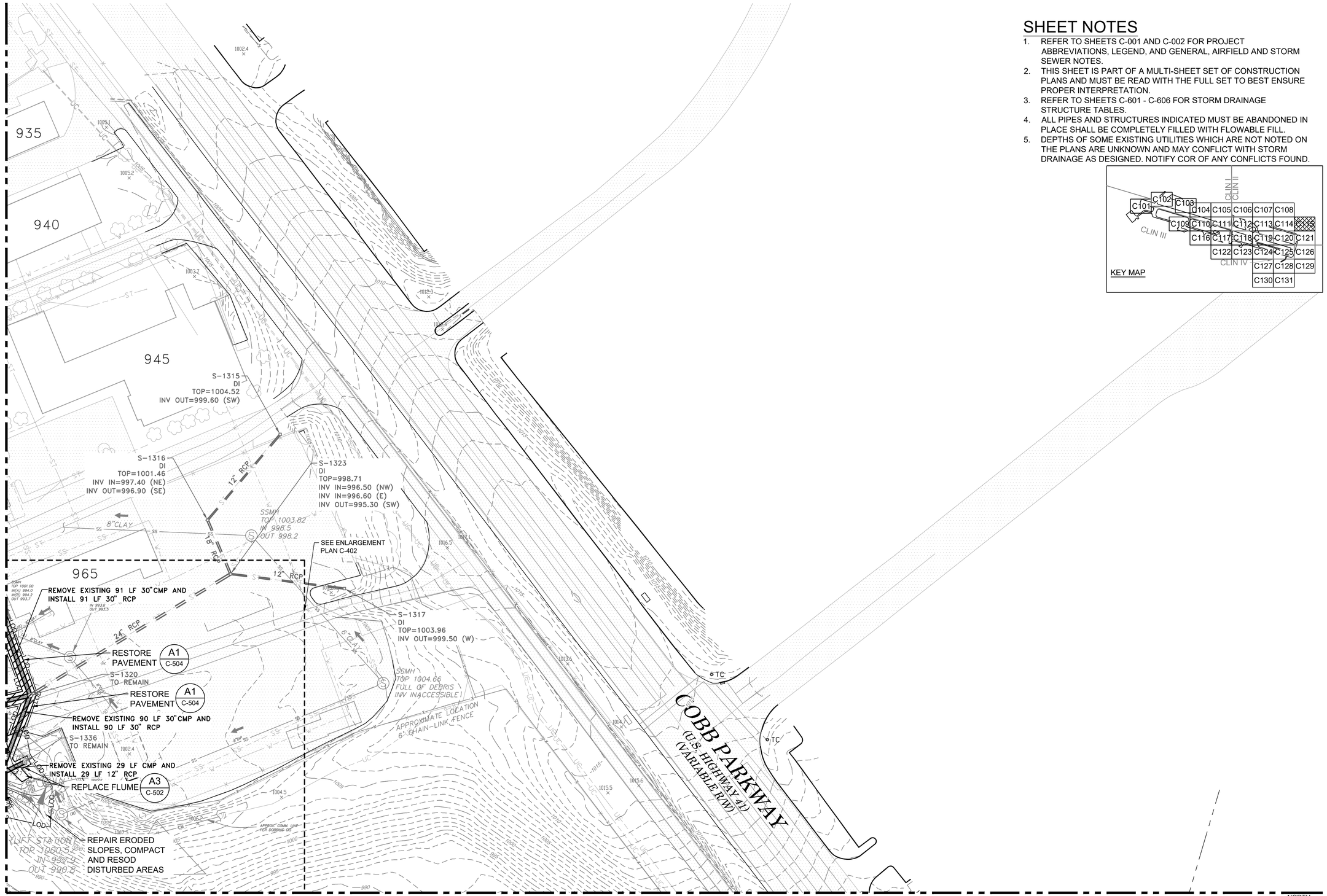

A1 STORM DRAINAGE PLAN
SCALE: 1" = 50'

SHEET NOTES

1. REFER TO SHEETS C-001 AND C-002 FOR PROJECT ABBREVIATIONS, LEGEND, AND GENERAL, AIRFIELD AND STORM SEWER NOTES.
2. THIS SHEET IS PART OF A MULTI-SHEET SET OF CONSTRUCTION PLANS AND MUST BE READ WITH THE FULL SET TO BEST ENSURE PROPER INTERPRETATION.
3. REFER TO SHEETS C-601 - C-606 FOR STORM DRAINAGE STRUCTURE TABLES.
4. ALL PIPES AND STRUCTURES INDICATED MUST BE ABANDONED IN PLACE SHALL BE COMPLETELY FILLED WITH FLOWABLE FILL.
5. DEPTHS OF SOME EXISTING UTILITIES WHICH ARE NOT NOTED ON THE PLANS ARE UNKNOWN AND MAY CONFLICT WITH STORM DRAINAGE AS DESIGNED. NOTIFY COR OF ANY CONFLICTS FOUND.

KEY MAP

US Army Corps of Engineers®
Louisville District

TANYA NORMAN, P.E.
P.E. No. 0038055, GA

GEORGIA REGISTERED No. PE038055 PROFESSIONAL ENGINEER TANYA L. NORMAN

DATE: 01/09/2026

MARK	DESCRIPTION	DATE

DESIGNED BY: T. NORMAN
DRAWN BY: J.P. ARISTIZABAL
CHECKED BY: D.M. LECKIE
SUBMITTED BY: A. DUEHR
SIZE: ANSI D
ISSUE DATE: JANUARY 9, 2026
SOLICITATION NO.:
CONTRACT NO.:
FILE NUMBER: 4230218
FILE NAME: 470584-C-101(B).dwg

U.S. ARMY CORPS OF ENGINEERS
LOUISVILLE DISTRICT
LOUISVILLE, KENTUCKY 40210-0059

POND
3500 PARKWAY LANE
SUITE 500
PEACHTREE CORNERS, GA 30092
PHONE (678) 339-7760
FOND JOB No. 1230218

REPAIR & MAINTAIN AIRFIELD STORMWATER SYSTEM
PHASE II
DOBBINS AIR RESERVE BASE, GEORGIA
PROJECT NO.: FGWB 21-0002 & FGWB 25-0006
P2#: 470584

STORM DRAINAGE PLAN

SHEET ID
C-115

CERTIFIED FINAL

FILE PATH: X:\FY23\1230218\04.CAD BIM\04.02.CAD_PH 2 SHEETS\470584-C-101(B) PLOTTED: 01/09/2026 BY: NORMAN, TANYA

MATCH LINE - SEE SHEET C-110

MATCH LINE - SEE SHEET C-117

S-1404
JB
TOP=1056.70
INV IN=1047.40 (E)
INV OUT=1047.40 (W)

A3 C-502 NEW CONCRETE FLUME

SOD REPLACEMENT

C3 C-502

REMOVE EXISTING FLUME AND CONSTRUCT NEW FLUME

A3 C-502

S-1430
DI (2'x6.2')
TOP=1027.56
INV OUT=1018.90 (S)

12" RCP

TO BE LINED
196 LF 24" CMP

S-1431
HW (ABANDONED)
INV IN=1051.10 (W)

MATCH GRADE OF EXISTING FLUME

END OF SOD REPLACEMENT

PHOTO & AERIAL CONTROL
BENCHMARK "HV4"
NE HELIPAD CORNER
N: 1,423,948.0
E: 2,188,351.6
EL: 1,059.14

IW LIFT STATION MH
TOP 1030.3
IN 1024.9
OUT 1024.8 (PER LMAS DESIGN PLANS)
(UNABLE TO CONFIRM INVERTS)

8" FUEL LINE
PER LOCKHEED PLANS

8" IW LINE
PER LMAS DESIGN
IW PUMP STATION

TAXIWAY E

SOD DISTURBED AREA

C3 C-502

SOD REPLACEMENT

REMOVE EXISTING 473 LF 18" CMP AND INSTALL 473 LF 18" RCP

SOD DISTURBED AREA

N=1423793.77
E=2189187.69

END OF SOD REPLACEMENT

S-1500
DI (2'x3')
TOP=1020.19
INV IN=1016.20 (NW)
INV IN=1016.20 (NE)
INV OUT=1015.80 (E)

S-1610
DI
TOP=1022.18
INV IN=1015.36 (W)
INV IN=1015.37 (S)
INV OUT=1015.36 (E)

36" RCP

S-1600
DI
TOP=1024.11
INV OUT=1018.07 (E)

12" RCP

S-1615
DI
TOP=1020.49
INV OUT=1017.82 (N)

SHEET NOTES

1. REFER TO SHEETS C-001 AND C-002 FOR PROJECT ABBREVIATIONS, LEGEND, AND GENERAL, AIRFIELD AND STORM SEWER NOTES.
2. THIS SHEET IS PART OF A MULTI-SHEET SET OF CONSTRUCTION PLANS AND MUST BE READ WITH THE FULL SET TO BEST ENSURE PROPER INTERPRETATION.
3. REFER TO SHEETS C-601 - C-606 FOR STORM DRAINAGE STRUCTURE TABLES.
4. ALL PIPES AND STRUCTURES INDICATED MUST BE ABANDONED IN PLACE SHALL BE COMPLETELY FILLED WITH FLOWABLE FILL.
5. DEPTHS OF SOME EXISTING UTILITIES WHICH ARE NOT NOTED ON THE PLANS ARE UNKNOWN AND MAY CONFLICT WITH STORM
6. VERIFY LOCATIONS OF EXISTING UTILITIES PRIOR TO START OF WORK AND NOTIFY COR IF SHALLOW UTILITIES (LESS THAN 2' DEEP) ARE ENCOUNTERED. S FOUND.

KEY MAP

CLIN I
CLIN II
CLIN III
CLIN IV

C101 C102 C103 C104 C105 C106 C107 C108 C109 C110 C111 C112 C113 C114 C115 C116 C117 C118 C119 C120 C121 C122 C123 C124 C125 C126 C127 C128 C129 C130 C131

A1 STORM DRAINAGE PLAN
SCALE: 1" = 50'

NORTH

0 25' 50' 100' 150'

US Army Corps of Engineers®
Louisville District

TANYA NORMAN, P.E.
P.E. No. 0038055, GA

GEORGIA REGISTERED No. PE0038055 PROFESSIONAL ENGINEER TANYA L. NORMAN

DATE: 01/09/2026

MARK	DESCRIPTION	DATE

DESIGNED BY: T. NORMAN
DRAWN BY: J.P. ARISTIZABAL
CHECKED BY: D.M. LECKIE
SUBMITTED BY: A. DUERR
SIZE: ANSI D
ISSUE DATE: JANUARY 9, 2026
SOLICITATION NO.:
CONTRACT NO.:
FILE NUMBER: 423021B
FILE NAME: 470584-C-101(B).dwg

U.S. ARMY CORPS OF ENGINEERS
LOUISVILLE DISTRICT
LOUISVILLE, KENTUCKY 40210-0059

POND
3300 BUSCHWAY LANE, SUITE 300 SMYRNA, GA 30080
PHONE (678) 336-2749
POND PROJECT NO. 170584

REPAIR & MAINTAIN AIRFIELD STORMWATER SYSTEM
PHASE II
DOBBINS AIR RESERVE BASE, GEORGIA
PROJECT NO.: FGWB 21-0002 & FGWB 25-0006
P2#: 470584

STORM DRAINAGE PLAN

SHEET ID
C-116

FILE PATH: X:\FY23\123021B\04.CAD BIM\04.02.CAD_PH 2 SHEETS\470584-C-101(B) PLOTTED: 01/09/2026 BY: NORMAN, TANYA

CERTIFIED FINAL

MATCH LINE - SEE SHEET C-111

A4 C-503 GRADE IN NEW SWALE

SOD DISTURBED AREA

NEW 111 LF 15" RCP

HELIPAD

C3 C-502 SOD REPLACEMENT

S-225
NEW DI
TOP=1025.14
INV OUT=1019.46 (N)

500' RUNWAY WINGTIP CLEARANCE

TO BE LINED
470 LF 24" CMP

SOD DISTURBED AREA

C3 C-502 SOD REPLACEMENT

S-1910
DI (2'x3')
TOP=1018.09
INV IN=1010.90 (W)
INV OUT=1010.70 (E)

A4 C-503 GRADE NEW SWALE

TO BE LINED
468 LF 30" CMP

SOLAR LIGHT

LIGHT (TYPICAL)

TAXIWAY G

SEE ENLARGEMENT PLAN C-403

NOTE: ENSURE ELECTRICAL EQUIPMENT AND POWER ARE NOT DISRUPTED BY CHANGES TO THE SIGN SYSTEM OF THE AIRFIELD. ADJUST THE ELECTRICAL CONNECTIONS TO NEW SIGN LOCATION.

A3 C-506 REMOVE AND REPLACE SIGN AND FOUNDATION

CUT SLOTS IN EACH SIDE OF EXISTING INLET TOP TO 1018.28 TO CONNECT WITH NEW FLUME

A3 C-502 NEW CONCRETE FLUME

S-1525
DI (3.8'x3.6')
LOWER TOP
TOP=1018.53
INV OUT=1014.40 (S)

NEW CONCRETE FLUME

A3 C-502

EL=1020.98

C3 C-502 SOD REPLACEMENT

SOD DISTURBED AREA

REMOVE EXISTING 473 LF 18"CMP AND INSTALL 473 LF 18" RCP

S-1510
DI (2.8'x3.8')
TOP=1018.75
INV IN=1015.20 (W)
INV IN=1015.60 (SW)
INV OUT=1015.10 (E)

6" CLAY

CORE HOLE FOR LARGER PIPE

LIGHT (TYPICAL)

TO BE LINED
518 LF 18" CMP

TO BE LINED
216 LF 24" CMP

A1 C-502 HOLDING POSITION MARKING

N=1423552.38
E=2190139.00

N=1423513.58
E=2190280.72

S-1520
DI (2'x6.2')
TOP=1018.16
INV IN=1013.50 (W)
INV IN=1013.90 (N)
INV OUT=1012.90 (E)

MULTIPLE FUEL LINES PER LOCKHEED PLANS

TO BE LINED
144 LF 30" CMP

SOD REPLACEMENT C3 C-502

S-1530
RAISE TO GRADE
TOP=1019.80
INV IN=1012.76 (W)
INV OUT=1012.76 (SE)

TO BE LINED
157 LF 42" CMP

JACK AND BORE 256 LF 48" ID STEEL CASSING AND 300 LF 42" OD HDPE SMOOTH WALL DR 26 PIPE (CARRIER)

C1 C-502

S-1531
NEW DI
TOP=1021.40
INV IN=1009.21 (NW)
INV OUT=1009.19 (SE)
INV OUT=1009.21 (E)

N=1423297.68
E=2190728.02

N=1423276.31
E=2190926.01

ABANDON IN PLACE
918 LF 42" CMP

APRON

S-1620
DI
TOP=1022.44
INV IN=1014.36 (W)
INV IN=1014.36 (S)
INV OUT=1014.30 (E)

12" RCP

S-1625
DI
TOP=1017.75
INV OUT=1015.09 (N)

S-1630
DI
TOP=1022.31
INV IN=1013.24 (W)
INV IN=1015.72 (SW)
INV OUT=1013.20 (SE)

WATER, AIR AND INDUSTRIAL WASTE LINES LOCATED THROUGHOUT THIS AREA. HEAVY CONGESTION OF UNDERGROUND LINES. PLEASE COORDINATE WITH ENGINEERING FOR ANY PROPOSED CONSTRUCTION ACTIVITIES IN THIS AREA

MATCH LINE - SEE SHEET C-116

MATCH LINE - SEE SHEET C-118

MATCH LINE - SEE SHEET C-122

SHEET NOTES

1. REFER TO SHEETS C-001 AND C-002 FOR PROJECT ABBREVIATIONS, LEGEND, AND GENERAL, AIRFIELD AND STORM SEWER NOTES.
2. THIS SHEET IS PART OF A MULTI-SHEET SET OF CONSTRUCTION PLANS AND MUST BE READ WITH THE FULL SET TO BEST ENSURE PROPER INTERPRETATION.
3. REFER TO SHEETS C-601 - C-606 FOR STORM DRAINAGE STRUCTURE TABLES.
4. ALL PIPES AND STRUCTURES INDICATED MUST BE ABANDONED IN PLACE SHALL BE COMPLETELY FILLED WITH FLOWABLE FILL.
5. DEPTHS OF SOME EXISTING UTILITIES WHICH ARE NOT NOTED ON THE PLANS ARE UNKNOWN AND MAY CONFLICT WITH STORM DRAINAGE AS DESIGNED. NOTIFY COR OF ANY CONFLICTS FOUND.

KEY MAP

CLIN I
CLIN II
CLIN III
CLIN IV

C101 C102 C103 C104 C105 C106 C107 C108 C109 C110 C111 C112 C113 C114 C115 C116 C117 C118 C119 C120 C121 C122 C123 C124 C125 C126 C127 C128 C129 C130 C131

A1 STORM DRAINAGE PLAN
SCALE: 1" = 50'

0 25' 50' 100' 150'

NORTH

FILE PATH: X:\PY23\123026\04.CAD BIM\04.02.CAD_PH2 SHEETS\47084C-101(B)_PH2.dwg PLOTTED: 01/09/2026 BY: NORMAN, TANYA

CERTIFIED FINAL

US Army Corps of Engineers®
Louisville District

TANYA NORMAN, P.E.
P.E. No. 0038055, GA

GEORGIA REGISTERED No. PE0038055 PROFESSIONAL ENGINEER TANYA L. NORMAN

DATE: 01/09/2026

MARK	DESCRIPTION	DATE

DESIGNED BY: T. NORMAN
DRAWN BY: J.P. ARISTIZABAL
CHECKED BY: D.M. LECKIE
SUBMITTED BY: A. DUEHR
ANSI D
ISSUE DATE: JANUARY 9, 2026
SOLICITATION NO.:
CONTRACT NO.:
FILE NUMBER: 1230216
FILE NAME: 470584-C-101(B).dwg

U.S. ARMY CORPS OF ENGINEERS
LOUISVILLE DISTRICT
LOUISVILLE, KENTUCKY 40210-0059

POND
SUITE 300
3101 WESTERN AVENUE, SEATTLE, WA 98121
PHONE (206) 382-7423
PHONE (781) 890-2837
WWW.POND.COM

REPAIR & MAINTAIN AIRFIELD STORMWATER SYSTEM
PHASE II
DOBBINS AIR RESERVE BASE, GEORGIA
PROJECT NO.: FGWB 21-0002 & FGWB 25-0006
P2#: 470584

STORM DRAINAGE PLAN

SHEET ID
C-117

MATCH LINE - SEE SHEET C-112

SHEET NOTES

1. REFER TO SHEETS C-001 AND C-002 FOR PROJECT ABBREVIATIONS, LEGEND, AND GENERAL, AIRFIELD AND STORM SEWER NOTES.
2. THIS SHEET IS PART OF A MULTI-SHEET SET OF CONSTRUCTION PLANS AND MUST BE READ WITH THE FULL SET TO BEST ENSURE PROPER INTERPRETATION.
3. REFER TO SHEETS C-601 - C-606 FOR STORM DRAINAGE STRUCTURE TABLES.
4. ALL PIPES AND STRUCTURES INDICATED MUST BE ABANDONED IN PLACE SHALL BE COMPLETELY FILLED WITH FLOWABLE FILL.
5. DEPTHS OF SOME EXISTING UTILITIES WHICH ARE NOT NOTED ON THE PLANS ARE UNKNOWN AND MAY CONFLICT WITH STORM DRAINAGE AS DESIGNED. NOTIFY COR OF ANY CONFLICTS FOUND.

MATCH LINE - SEE SHEET C-117

MATCH LINE - SEE SHEET C-119

MATCH LINE - SEE SHEET C-123

SOD REPLACEMENT C3 C-502

S-1921
NEW DI
TOP=1020.00
INV IN=1007.89 (W)
INV OUT=1007.90 (E)
A2 C-508

TO BE LINED
468 LF 30" CMP

S-1920
JB
TOP=1018.22
INV IN=1006.40 (W)
INV OUT=1005.90 (E)

TO BE LINED
250 LF 30" CMP

S-1930
JB
TOP=1016.55
INV IN=1005.10 (W)
INV OUT=1004.90 (S)

TO BE LINED
221 LF 30" RCP

S-694
DI
NOT LOCATED BY SURVEYOR. BURIED INLET. CONTRACTOR TO VERIFY
RAISE TOP TO 1013.50
INV OUT=1007.94 (N)
A2 C-508

RUNWAY

24" RCP

CLEAN EXISTING 24" RCP

KEY MAP
CLIN I
CLIN II
CLIN III
CLIN IV
C101 C102 C103 C104 C105 C106 C107 C108 C109 C110 C111 C112 C113 C114 C115 C116 C117 C118 C119 C120 C121 C122 C123 C124 C125 C126 C127 C128 C129 C130 C131

VEDA ALZ

500' RUNWAY WINGTIP CLEARANCE

SOD REPLACEMENT C3 C-502

TO BE LINED
163 LF 30" RCP

S-1943
JB
TOP=1013.07
INV IN=1006.00 (E)
INV IN=1009.10 (SW)
INV OUT=1006.00 (W)

CORE STRUCTURE FOR NEW PIPE DI FOR 18" RCP

S-1944
TO REMAIN
DI (6'x2.9')
TOP=1009.78
INV IN=1006.50 (SE)
INV OUT=1006.40 (W)

NEW 145 LF 18" RCP

S-1945
NEW DI
TOP=1011.15
INV OUT=1007.95 (NW)
A1 C-508

TO BE LINED
106 LF 24" CMP

SOD DISTURBED AREA

TO BE LINED
163 LF 24" RCP

LIGHT (TYPICAL)

TO BE LINED
310 LF 24" RCP

61 LF 6"

TO BE LINED
155 LF 30" RCP

S-1940
JB
TOP=1013.95
INV IN=1004.20 (N)
INV IN=1004.20 (E)
INV OUT=1004.10 (S)

S-1942
JB
TOP=1013.83
INV IN=1005.50 (E)
INV OUT=1005.40 (W)
A2 C-508

S-1946
NEW DI
TOP=1013.45
INV IN=997.80 (N)
INV OUT=997.80 (S)
A2 C-508

CORE DRILL EXISTING DI FOR 18" RCP

S-2010
TO REMAIN
DI (6'x2.9')
(STEEL PLATE WITH 12" OPENING AT CUT PIPE)
TOP=1005.23
INV IN=1000.40 (E)
INV OUT=1000.40 (S)

NEW 239 LF 18" RCP

SOD DISTURBED AREA

S-2000
NEW DI
TOP=1009.99
INV OUT=1006.36 (W)
A2 C-508

BENCHMARK
GEO #3675
N: 1,423,160.7
E: 2,191,124.8.

S-1830
DI (3.5'x3.5')
TOP=1014.84
INV IN=1008.50 (SW)
INV OUT=1008.40 (E)

TAXIWAY E

S-1532
NEW DI
TOP=1020.60
INV IN=1003.43 (W)
INV OUT=1003.43 (SE)
A2 C-508

S-1533
NEW DI
TOP=1018.82
INV IN=1000.37 (NW)
INV OUT=1000.37 (SE)
A2 C-508

MULTIPLE FUEL LINES PER LOC.

UTILITY BOX

150 LF 42" RCP

S-1820
LOST SIGNAL

S-1800

S-1810

15" RCP

18" RCP

S-1840
DI (3.5'x3.5')
TOP=1010.32
INV IN=1004.80 (W)
INV IN=1004.80 (SE)
INV OUT=1004.50 (SE)

S-1845
DI (2.7'x2.7')
TOP=1010.00
INV OUT=1007.30 (NW)

UTILITY

FLUME

TO BE LINED
399 LF 30" RCP

TO BE LINED
290 LF 30" RCP

N=1423177.70
E=2191575.36

UTILITY PANEL

STORM DRAINAGE PLAN

A1 SCALE: 1" = 50'

NORTH

0 25' 50' 100' 150'

US Army Corps of Engineers®
Louisville District

TANYA NORMAN, P.E.
P.E. No. 0038055, GA
GEORGIA REGISTERED No. PE038055 PROFESSIONAL ENGINEER TANYA L. NORMAN
DATE: 01/09/2026

MARK	DESCRIPTION	DATE

ISSUE DATE: JANUARY 9, 2026
SOLICITATION NO.:
CONTRACT NO.:
FILE NUMBER: 1230216
FILE NAME: 470584-C-101(B).dwg

DESIGNED BY: T. NORMAN
DRAWN BY: J.P. ARISTIZABAL
CHECKED BY: D.M. LECKIE
SUBMITTED BY: S. ZEHENDER
ANSI D

U.S. ARMY CORPS OF ENGINEERS
LOUISVILLE DISTRICT
LOUISVILLE, KENTUCKY 40210-0059

POND
POND
2091 STEPHENSON HIGHWAY, SUITE 500, SMYRNA, GA 30080
PHONE: (678) 336-2700
WWW.POND.COM

REPAIR & MAINTAIN AIRFIELD STORMWATER SYSTEM PHASE II
DOBBINS AIR RESERVE BASE, GEORGIA
PROJECT NO.: FGWB 21-0002 & FGWB 25-0006
P2#: 470584

STORM DRAINAGE PLAN

SHEET ID
C-118

FILE PATH: X:\PY23\123021804\CAD\BIM\04.02.CADI_PH 2 SHEETS\470584-C-101(B) PLOTTED: 01/09/2026 BY: NORMAN, TANYA

CERTIFIED FINAL

MATCH LINE - SEE SHEET C-113

MATCH LINE - SEE SHEET C-118

MATCH LINE - SEE SHEET C-120

MATCH LINE - SEE SHEET C-124

SHEET NOTES

1. REFER TO SHEETS C-001 AND C-002 FOR PROJECT ABBREVIATIONS, LEGEND, AND GENERAL, AIRFIELD AND STORM SEWER NOTES.
2. THIS SHEET IS PART OF A MULTI-SHEET SET OF CONSTRUCTION PLANS AND MUST BE READ WITH THE FULL SET TO BEST ENSURE PROPER INTERPRETATION.
3. REFER TO SHEETS C-601 - C-606 FOR STORM DRAINAGE STRUCTURE TABLES.
4. ALL PIPES AND STRUCTURES INDICATED MUST BE ABANDONED IN PLACE SHALL BE COMPLETELY FILLED WITH FLOWABLE FILL.
5. DEPTHS OF SOME EXISTING UTILITIES WHICH ARE NOT NOTED ON THE PLANS ARE UNKNOWN AND MAY CONFLICT WITH STORM DRAINAGE AS DESIGNED. NOTIFY COR OF ANY CONFLICTS FOUND.

KEY MAP

CLIN I
CLIN II
CLIN III
CLIN IV

C101 C102 C103 C104 C105 C106 C107 C108 C109 C110 C111 C112 C113 C114 C115 C116 C117 C118 C119 C120 C121 C122 C123 C124 C125 C126 C127 C128 C129 C130 C131

SOD REPLACEMENT C3 C-502

GRADE IN NEW SWALE (CONSTRUCT AND STABILIZE IN ONE DAY) A4 C-503

SOD DISTURBED AREA

EXISTING SWALE FLOW LINE

EL=1006.62

EL=1011.00

EL=1004.41

EL=1006.57

20:1

18:1

S-2110
JB
TOP=1005.42
INV IN=1000.02 (S)
INV IN=1002.42 (W)
INV IN=1002.42 (SE)
INV OUT=999.92 (E)

S-2100
JB
TOP=1005.67
INV IN=1002.07 (NW)
INV IN=1002.07 (NE)
INV OUT=1000.47 (N)

40 LF 6" PVC
44 LF 15" RCP
99 LF 6" PVC
84 LF 15" RCP

CLIN II
CLIN III

500' RUNWAY WINGTIP CLEARANCE

RUNWAY A

LOD

UC

A1 STORM DRAINAGE PLAN
SCALE: 1" = 50'

NORTH

0 25' 50' 100' 150'

US Army Corps of Engineers®
Louisville District

TANYA NORMAN, P.E.
P.E. No. 0038055, GA

GEORGIA REGISTERED No. PE038055 PROFESSIONAL ENGINEER TANYA L. NORMAN

DATE: 01/09/2026

MARK	DESCRIPTION	DATE

ISSUE DATE:	JANUARY 9, 2026
SOLICITATION NO.:	
CONTRACT NO.:	
FILE NUMBER:	1230216
DESIGNED BY:	T. NORMAN
DRAWN BY:	J.P. ARISTIZABAL
CHECKED BY:	D.M. LECKIE
SUBMITTED BY:	A. ZUEHR
FILE NAME:	470584-C-101(B).dwg
ANSI D	

U.S. ARMY CORPS OF ENGINEERS
LOUISVILLE DISTRICT
LOUISVILLE, KENTUCKY 40210-0059

POND
3025 NORMANDY LANE
SUITE 300
ALPHARETTA, GA 30009
PHONE (678) 336-2742
POND-INC.COM

REPAIR & MAINTAIN AIRFIELD STORMWATER SYSTEM
PHASE II
DOBBINS AIR RESERVE BASE, GEORGIA
PROJECT NO.: FGWB 21-0002 & FGWB 25-0006
P2#: 470584

STORM DRAINAGE PLAN

SHEET ID
C-119

CERTIFIED FINAL

FILE PATH: X:\FY23\123021804.CAD BIM\04.02.CAD_PH 2 SHEETS\470584-C-101(B) PLOTTED: 01/09/2026 BY: NORMAN, TANYA

SHEET NOTES

1. REFER TO SHEETS C-001 AND C-002 FOR PROJECT ABBREVIATIONS, LEGEND, AND GENERAL, AIRFIELD AND STORM SEWER NOTES.
2. THIS SHEET IS PART OF A MULTI-SHEET SET OF CONSTRUCTION PLANS AND MUST BE READ WITH THE FULL SET TO BEST ENSURE PROPER INTERPRETATION.
3. REFER TO SHEETS C-601 - C-606 FOR STORM DRAINAGE STRUCTURE TABLES.
4. ALL PIPES AND STRUCTURES INDICATED MUST BE ABANDONED IN PLACE SHALL BE COMPLETELY FILLED WITH FLOWABLE FILL.
5. DEPTHS OF SOME EXISTING UTILITIES WHICH ARE NOT NOTED ON THE PLANS ARE UNKNOWN AND MAY CONFLICT WITH STORM DRAINAGE AS DESIGNED. NOTIFY COR OF ANY CONFLICTS FOUND.

KEY MAP

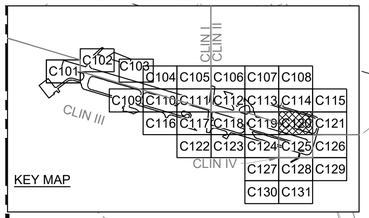

NORTHEAST PARALLEL TAXIWAY

SOD REPLACEMENT C3 C-502

377 LF 48" RCP TO BE LINED

CLIN IV: REMOVE AND REPLACE HEADWALL AND PORTION OF CONC. FLUME. DEMOLISH SECTION OF PIPE TO NEAREST JOINT AND CAP END OF PIPE.

26 LF 48" RCP TO BE LINED

S-1140
DI (2'x3')
TOP=990.13
INV IN=979.00 (N)
INV OUT=978.80 (S)

S-1150
HW
INV IN=978.80 (N)

CLIN II

CLIN IV

500' RUNWAY WINGTIP CLEARANCE

REPAIR EROSION AND RESOD

EL=991.80

EL=996.22

A1 C-511

S-2210
NEW HW
INV IN=974.30 (S)

NEW 259 LF 48" RCP

SOD DISTURBED AREA

APPROXIMATE LIMITS OF LAUNCH PIT

S-2212
NEW JB
W/ AIRCRAFT LOAD
TOP=989.91
INV IN=970.70 (N)
INV OUT=970.70 (S)

ILS EQUIPMENT AND CONDUIT TO BE PROTECTED

937 LF 48" CMP ABANDON IN PLACE

50.00'

16.00'

80' MIN

20'

ILS EQUIPMENT AND CONDUIT TO BE PROTECTED

RUNWAY

C3 C-502 SOD REPLACEMENT

JACK AND BORE 560 LF 60" ID STEEL CASING AND 605 LF 48" OD HDPE SMOOTH WALL DR 26 PIPE (CARRIER)

C1 C-502

CONCRETE SECTION JOINTS

CONCRETE FLUME

MATCH LINE - SEE SHEET C-119

MATCH LINE - SEE SHEET C-121

MATCH LINE - SEE SHEET C-125

A1 STORM DRAINAGE PLAN
SCALE: 1" = 50'

NORTH

0 25' 50' 100' 150'

US Army Corps of Engineers®
Louisville District

TANYA NORMAN, P.E.
P.E. No. 0038055, GA

GEORGIA REGISTERED No. PE0038055 PROFESSIONAL ENGINEER TANYA L. NORMAN

DATE: 01/09/2026

MARK	DESCRIPTION	DATE

ISSUE DATE:	JANUARY 9, 2026
SOLICITATION NO.:	
CONTRACT NO.:	
FILE NUMBER:	1230216
FILE NAME:	470584-C-101(B).dwg

DESIGNED BY:	T. NORMAN
DRAWN BY:	J.P. ARISTIZABAL
CHECKED BY:	D.M. LECKIE
SUBMITTED BY:	A. DUERR
ANS D	

U.S. ARMY CORPS OF ENGINEERS
LOUISVILLE DISTRICT
LOUISVILLE, KENTUCKY 40210-0059

POND
3101 PARK CENTER DRIVE, SUITE 300
FAIRFAX, VIRGINIA 22030
PHONE (571) 730-2723
WWW.POND.COM

REPAIR & MAINTAIN AIRFIELD STORMWATER SYSTEM
PHASE II
DOBBINS AIR RESERVE BASE, GEORGIA
PROJECT NO.: FGWB 21-0002 & FGWB 25-0006
P2#: 470584

STORM DRAINAGE PLAN

SHEET ID
C-120

CERTIFIED FINAL

FILE PATH: X:\PY23\123021804\CAD BIM\04.02.CAD_PH 2 SHEETS\470584-C-101(B) PLOTTED: 01/09/2026 BY: NORMAN, TANYA

MATCH LINE - SEE SHEET C-115

MATCH LINE - SEE SHEET C-120

MATCH LINE - SEE SHEET C-126

SHEET NOTES

1. REFER TO SHEETS C-001 AND C-002 FOR PROJECT ABBREVIATIONS, LEGENDS, AND GENERAL, AIRFIELD AND STORM SEWER NOTES.
2. THIS SHEET IS PART OF A MULTI-SHEET SET OF CONSTRUCTION PLANS AND MUST BE READ WITH THE FULL SET TO BEST ENSURE PROPER INTERPRETATION.
3. REFER TO SHEETS C-601 - C-606 FOR STORM DRAINAGE STRUCTURE TABLES.
4. PROTECT EXISTING STANDPIPE TO REMAIN. IF DAMAGED TO DURING CONSTRUCTION, REPLACE AT CONTRACTORS EXPENSE.
5. DEPTHS OF SOME EXISTING UTILITIES WHICH ARE NOT NOTED ON THE PLANS ARE UNKNOWN AND MAY CONFLICT WITH STORM DRAINAGE AS DESIGNED. NOTIFY COR OF ANY CONFLICTS FOUND.

KEY MAP

CLIN I
CLIN II
CLIN III
CLIN IV

C101 C102 C103 C104 C105 C106 C107 C108 C109 C110 C111 C112 C113 C114 C115 C116 C117 C118 C119 C120 C121 C122 C123 C124 C125 C126 C127 C128 C129 C130 C131

SOD REPLACEMENT C3 C-502

EXPANSION JOINT

EL=990.30

REMOVE AND REPLACE EXISTING 6' CHAIN LINK FENCE. CONTRACTOR SHALL SECURE AIRFIELD. THROUGHOUT CONSTRUCTION, PROVIDING A SECURE PERIMETER AT ALL TIMES.

S-2400
FES
INV IN=990.30 (N)

S-2412
HW
INV IN=992.00 (N)

S-2410
HW
INV OUT=992.00 (S)

15" RCP

APPROXIMATE LOCATION OF CHAIN LINK FENCE

REPAIR SLOPE

NEW CONC. FLUME

PATROL ROAD

EL=975.01

A3 C-502 517 LF CONCRETE FLUME

EXPANSION JOINT

APPROX. COMM. LINE PER DOBBINS ARB GIS

S-2480
PIPE
INV OUT=974.10 (SW)

A3 C-502 NEW CONCRETE FLUME AND OUTFALL PAD

24" RCP

PROTECT EXISTING STANDPIPE TO REMAIN. IF DAMAGED TO DURING CONSTRUCTION, REPLACE AT CONTRACTORS EXPENSE.

ENLARGEMENT - SEE SHEET C-403

S-2471
NEW END WALL
INV IN=964.3

A3 C-502 REMOVE AND REPLACE CONCRETE FLUME

CORE HOLE FOR LARGER PIPE

S-2470
REPLACE EXISITING FLARED END SECTION
INV IN=963.30 (NE)

A5 C-403 S-2450
36" STANDPIPE
TOP=974.80
INV OUT=970.80 (SE)

APPROXIMATE 10'-DIA SINKHOLE

REMOVE EXISTING 80 LF 24" CMP AND INSTALL 80 LF 24" RCP

RAISE EXISTING LOW AREA

S-2460
HW
TOP=959.85
INV IN=957.10 (NW)

S-2430
JB
TOP=985.14
INV IN=981.50 (W)
INV IN=981.50 (S)
INV OUT=981.40 (E)

S-2420
JB
TOP=984.95
INV IN=981.70 (S)
INV OUT=981.70 (E)

CMP TO BE LINED
93 LF 12" CMP

REMOVE 20 LF OF 12" CMP AND INSTALL 20 LF OF 12" CMP

S-2440
INSTALL MES
INV IN=979.41 (W)

CMP TO BE LINED
83 LF 8" CMP

6" CPP

500' RUNWAY WINGTIP CLEARANCE

S-2435
METAL LID BOLTED SHUT
TOP=985.18
INV OUT=981.60 (N)

METAL LID BOLTED SHUT 986.21

EXISTING ACCESS DRIVE

A1 STORM DRAINAGE PLAN
SCALE: 1" = 50'

NORTH

0 25' 50' 100' 150'

US Army Corps of Engineers®
Louisville District

TANYA NORMAN, P.E.
P.E. No. 0038055, GA

GEORGIA REGISTERED No. PE0038055 PROFESSIONAL ENGINEER TANYA L. NORMAN

DATE: 01/09/2026

MARK	DESCRIPTION	DATE

DESIGNED BY:	T. NORMAN
DRAWN BY:	J.P. ARISTIZABAL
CHECKED BY:	D.M. LECKIE
SUBMITTED BY:	A. DEPHEW
SCALE:	ANSI D
ISSUE DATE:	JANUARY 9, 2026
SOLICITATION NO.:	
CONTRACT NO.:	
FILE NUMBER:	423026
FILE NAME:	470584-C-101(B).dwg

U.S. ARMY CORPS OF ENGINEERS
LOUISVILLE DISTRICT
LOUISVILLE, KENTUCKY 40210-0059

POND
POND & COMPANY
3200 CORPORATE EXCHANGE WAY, SUITE 300, MIDDLEBURY LANE, GEORGIA 30092
PHONE (678) 336-2743

REPAIR & MAINTAIN AIRFIELD STORMWATER SYSTEM
PHASE II
DOBBINS AIR RESERVE BASE, GEORGIA
PROJECT NO.: FGWB 21-0002 & FGWB 25-0006
P2#: 470584

STORM DRAINAGE PLAN

SHEET ID
C-121

FILE PATH: X:\FY23\123026\904.CAD BIM\04.02.CAD_PH 2 SHEETS\470684-C-101(B) PLOTTED: 01/09/2026 BY: NORMAN, TANYA

CERTIFIED FINAL

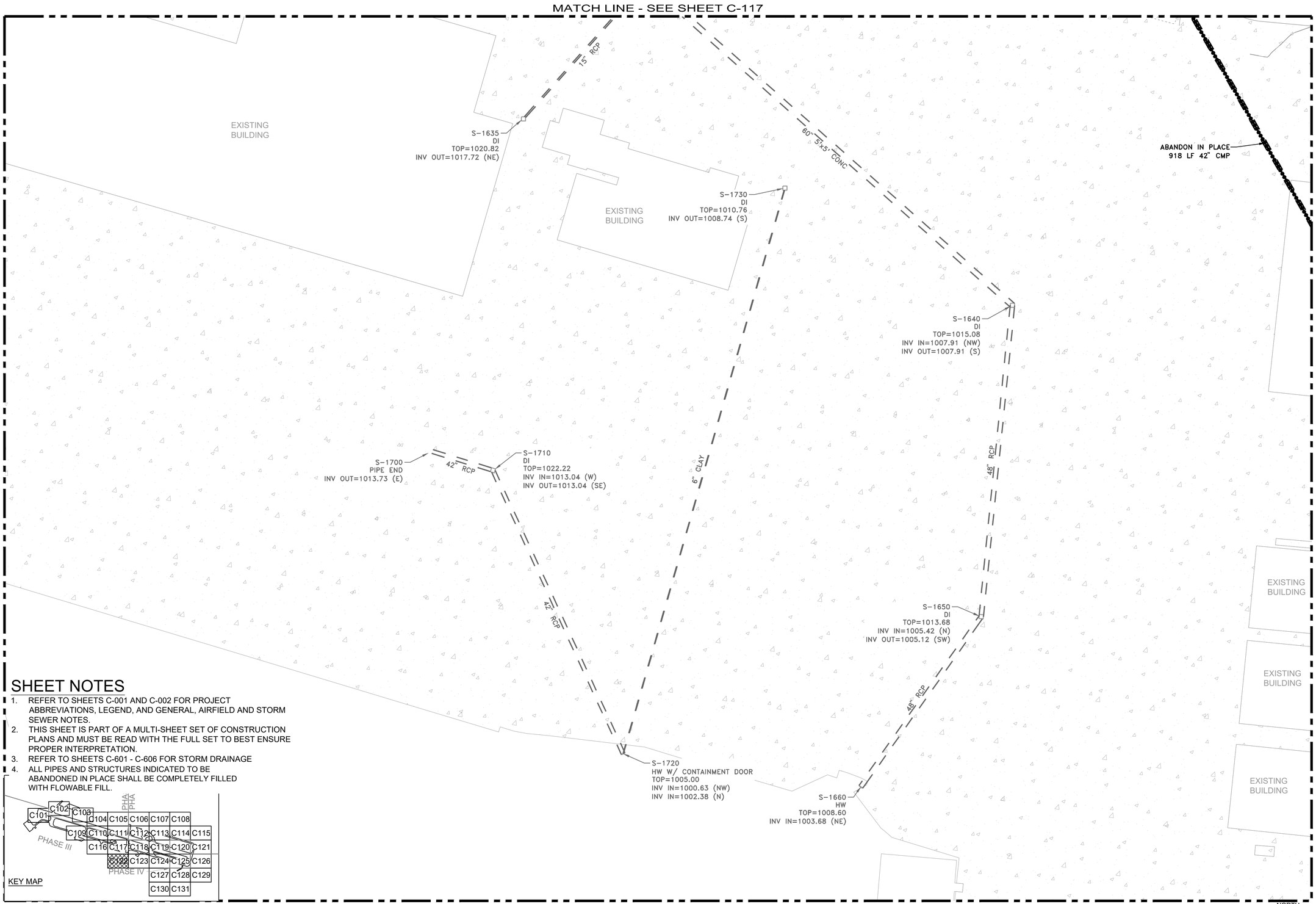

SHEET NOTES

1. REFER TO SHEETS C-001 AND C-002 FOR PROJECT ABBREVIATIONS, LEGEND, AND GENERAL, AIRFIELD AND STORM SEWER NOTES.
2. THIS SHEET IS PART OF A MULTI-SHEET SET OF CONSTRUCTION PLANS AND MUST BE READ WITH THE FULL SET TO BEST ENSURE PROPER INTERPRETATION.
3. REFER TO SHEETS C-601 - C-606 FOR STORM DRAINAGE
4. ALL PIPES AND STRUCTURES INDICATED TO BE ABANDONED IN PLACE SHALL BE COMPLETELY FILLED WITH FLOWABLE FILL.

KEY MAP

A1 STORM DRAINAGE PLAN

SCALE: 1" = 50'

US Army Corps of Engineers®
Louisville District

TANYA NORMAN, P.E.
P.E. No. 0038055, GA

GEORGIA REGISTERED No. PE038055 PROFESSIONAL ENGINEER TANYA L. NORMAN

DATE: 01/09/2026

MARK	DESCRIPTION	DATE

DESIGNED BY: T. NORMAN
DRAWN BY: J.P. ARISTIZABAL
CHECKED BY: D.M. LECKIE
SUBMITTED BY: A. DUEHR
SIZE: ANSI D
FILE NAME: 470584-C-101(C).dwg
ISSUE DATE: JANUARY 9, 2026
SOLICITATION NO.:
CONTRACT NO.:
FILE NUMBER: 4230218

U.S. ARMY CORPS OF ENGINEERS
LOUISVILLE DISTRICT
LOUISVILLE, KENTUCKY 40210-0059

POND
350 PARKWAY LANE
SUITE 500
PEACHTREE CORNERS, GA 30092
PHONE (678) 336-7750
POND JOB No. 1230218

REPAIR & MAINTAIN AIRFIELD STORMWATER SYSTEM
PHASE II
DOBBINS AIR RESERVE BASE, GEORGIA
PROJECT NO.: FGWB 21-0002 & FGWB 25-0006
P2#: 470584

STORM DRAINAGE PLAN

SHEET ID
C-122

CERTIFIED FINAL

FILE PATH: X:\FY23\1230218\04.CAD BIM\04.02.CAD_PH 2 SHEETS\470584-C-101(C) PLOTTED: 01/09/2026 BY: NORMAN, TANYA

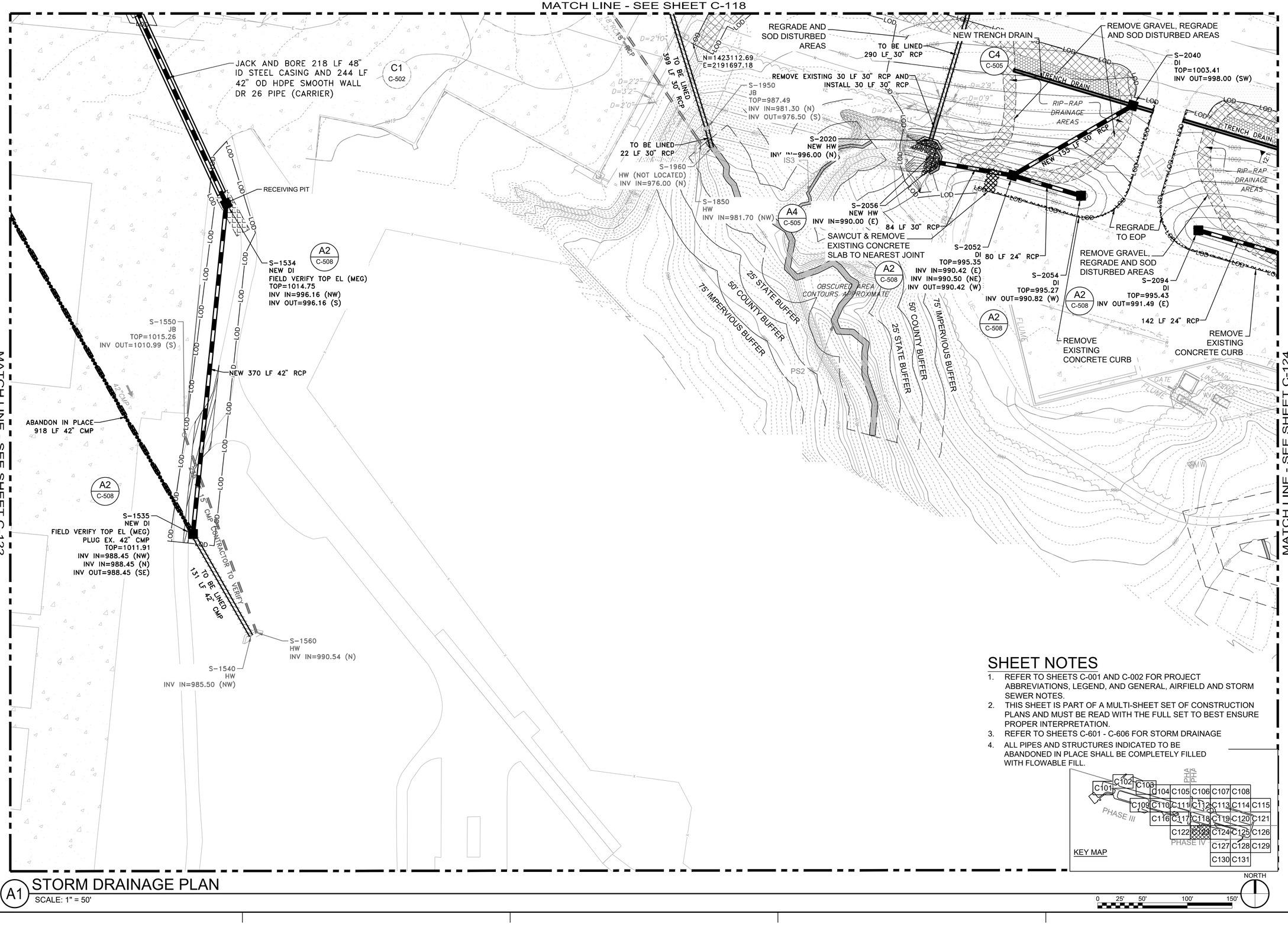

SHEET NOTES

1. REFER TO SHEETS C-001 AND C-002 FOR PROJECT ABBREVIATIONS, LEGEND, AND GENERAL, AIRFIELD AND STORM SEWER NOTES.
2. THIS SHEET IS PART OF A MULTI-SHEET SET OF CONSTRUCTION PLANS AND MUST BE READ WITH THE FULL SET TO BEST ENSURE PROPER INTERPRETATION.
3. REFER TO SHEETS C-601 - C-606 FOR STORM DRAINAGE
4. ALL PIPES AND STRUCTURES INDICATED TO BE ABANDONED IN PLACE SHALL BE COMPLETELY FILLED WITH FLOWABLE FILL.

A1 STORM DRAINAGE PLAN
SCALE: 1" = 50'

NORTH

0 25' 50' 100' 150'

US Army Corps of Engineers® Louisville District

TANYA NORMAN, P.E.
P.E. No. 0038055, GA

GEORGIA REGISTERED No. PE038055 PROFESSIONAL ENGINEER TANYA L. NORMAN

DATE: 01/09/2026

MARK	DESCRIPTION	DATE

U.S. ARMY CORPS OF ENGINEERS
LOUISVILLE DISTRICT
LOUISVILLE, KENTUCKY 40210-0059

POND
3500 PARKWAY LANE
SUITE 500
PEACHTREE CORNERS, GA 30092
PHONE (678) 336-7760
POND JOB No. 7230218

DESIGNED BY: T. NORMAN	ISSUE DATE: JANUARY 9, 2026
DRAWN BY: J.P. ARISTIZABAL	SOLICITATION NO.:
CHECKED BY: D.M. LECKIE	CONTRACT NO.:
SUBMITTED BY: A. DUEHR	FILE NUMBER: 1230218
SIZE: ANSI D	FILE NAME: 470584-C-101(C).dwg

REPAIR & MAINTAIN AIRFIELD STORMWATER SYSTEM
PHASE II
DOBBINS AIR RESERVE BASE, GEORGIA
PROJECT NO.: FGWB 21-0002 & FGWB 25-0006
P2#: 470584

STORM DRAINAGE PLAN

SHEET ID
C-123

CERTIFIED FINAL

FILE PATH: X:\FY23\1230218\04.CAD BIM\04.02.CAD_PH 2 SHEETS\470584-C-101(C) PLOTTED: 01/09/2026 BY: NORMAN, TANYA

MATCH LINE - SEE SHEET C-119

MATCH LINE - SEE SHEET C-123

MATCH LINE - SEE SHEET C-125

MATCH LINE - SEE SHEET C-127

NEW TRENCH DRAIN C4 C-505

S-2080
NEW TRENCH DRAIN
TOP=1004.41
INV OUT=998.80 (SW)

RIP-RAP DRAINAGE AREAS

TRENCH DRAIN

NEW 117 LF 30" RCP

76 LF 30" RCP

REGRADE AND SOD DISTURBED AREAS

REMOVE GRAVEL AND REGRADE

INSTALL RIPRAP AT INVERT A4 C-505

S-2096
HW
INV IN=990.40 (NW)

REMOVE EXISTING CONCRETE CURB

S-2092
DI
TOP=994.87
INV IN=990.78 (W)
INV IN=990.80 (NE)
INV OUT=990.78 (SE)
A2 C-508

OBSCURED AREA CONTOURS APPROXIMATE

C3 C-502 SOD REPLACEMENT

1500' RUNWAY WINGTIP CLEARANCE

SOD DISTURBED AREA

EXISTING SWALE FLOW LINE

GRADE IN NEW SWALE (CONSTRUCT AND STABILIZE IN ONE DAY)

A4 C-503

BENCHMARK "MAG NAIL"
GEO #3674
N: 1,422,930.78
E: 2,192,624.66
EL: 1,005.81

DEAD RUNWAY TRAINING AREA

N=1422412.86
E=2192928.70

N=1422512.84
E=2193100.38

GATE

75' IMPERVIOUS BUFFER
50' COUNTY BUFFER
25' STATE BUFFER

VEDA ALZ

15" RCP

157 LF 12" RCP TO BE LINED

S-2120
DI (6'x2.9')
TOP=994.79
INV IN=990.60 (SE)
INV IN=990.60 (SE)
INV IN=978.34 (W)
INV OUT=978.30 (S)

239 LF 36" RCP TO BE LINED

LIGHT (TYPICAL)

S-2135
DI (6'x2.9')
TOP=989.81
INV OUT=976.10 (E)

SOD REPLACEMENT C3 C-502

24" RCP

S-2130
JB
TOP=990.53
INV IN=975.40 (N)
INV IN=975.50 (W)
INV OUT=975.10 (S)

TAXIWAY E

402 LF 36" RCP TO BE LINED

SOD REPLACEMENT C3 C-502

BENCHMARK "MAG NAIL"
GEO #3673
N: 1,422,674.46
E: 2,193,748.77
EL: 993.89

S-2140
HW
INV IN=971.06 (N)

WETLANDS FLAGGING PLACE BY OTHERS

WL5

PS6

OBSCURED AREA CONTOURS APPROXIMATE

SHEET NOTES

1. REFER TO SHEETS C-001 AND C-002 FOR PROJECT ABBREVIATIONS, LEGEND, AND GENERAL, AIRFIELD AND STORM SEWER NOTES.
2. THIS SHEET IS PART OF A MULTI-SHEET SET OF CONSTRUCTION PLANS AND MUST BE READ WITH THE FULL SET TO BEST ENSURE PROPER INTERPRETATION.
3. REFER TO SHEETS C-601 - C-606 FOR STORM DRAINAGE
4. ALL PIPES AND STRUCTURES INDICATED TO BE ABANDONED IN PLACE SHALL BE COMPLETELY FILLED WITH FLOWABLE FILL.

EXISTING PAVEMENT TO BE PROTECTED. CONTRACTOR RESPONSIBLE TO REPAIR ANY AREAS DAMAGED DURING CONSTRUCTION TO APPROVED STANDARD BY COR.

KEY MAP

PHASE III
PHASE IV
PHA
PHA

C101 C102 C103 C104 C105 C106 C107 C108 C109 C110 C111 C112 C113 C114 C115 C116 C117 C118 C119 C120 C121 C122 C123 C124 C125 C126 C127 C128 C129 C130 C131

A1 STORM DRAINAGE PLAN
SCALE: 1" = 50'

NORTH

0 25' 50' 100' 150'

US Army Corps of Engineers®
Louisville District

TANYA NORMAN, P.E.
P.E. No. 0038055, GA
GEORGIA REGISTERED No. PE038055 PROFESSIONAL ENGINEER TANYA L. NORMAN
DATE: 01/09/2026

MARK	DESCRIPTION	DATE

DESIGNED BY: T. NORMAN
DRAWN BY: J.P. ARISTIZABAL
CHECKED BY: D.M. LECKIE
SUBMITTED BY: A. ZIEMER
ANSI D
ISSUE DATE: JANUARY 9, 2026
SOLICITATION NO.:
CONTRACT NO.:
FILE NUMBER: 1230218
FILE NAME: 470584-C-101(C).dwg

U.S. ARMY CORPS OF ENGINEERS
LOUISVILLE DISTRICT
LOUISVILLE, KENTUCKY 40210-0059

POND
3015 AMWAY AVE
SUITE 2000 ATLANTA, GA 30092
PHONE (678) 530-7470
POND-INC.COM

REPAIR & MAINTAIN AIRFIELD STORMWATER SYSTEM
PHASE II
DOBBINS AIR RESERVE BASE, GEORGIA
PROJECT NO.: FGWB 21-0002 & FGWB 25-0006
P2#: 470584

STORM DRAINAGE PLAN

SHEET ID
C-124

FILE PATH: X:\FY23\123021804.CAD BIM\04.02.CAD_PH 2 SHEETS\470584-C-101(C) PLOTTED: 01/09/2026 BY: NORMAN, TANYA

CERTIFIED FINAL

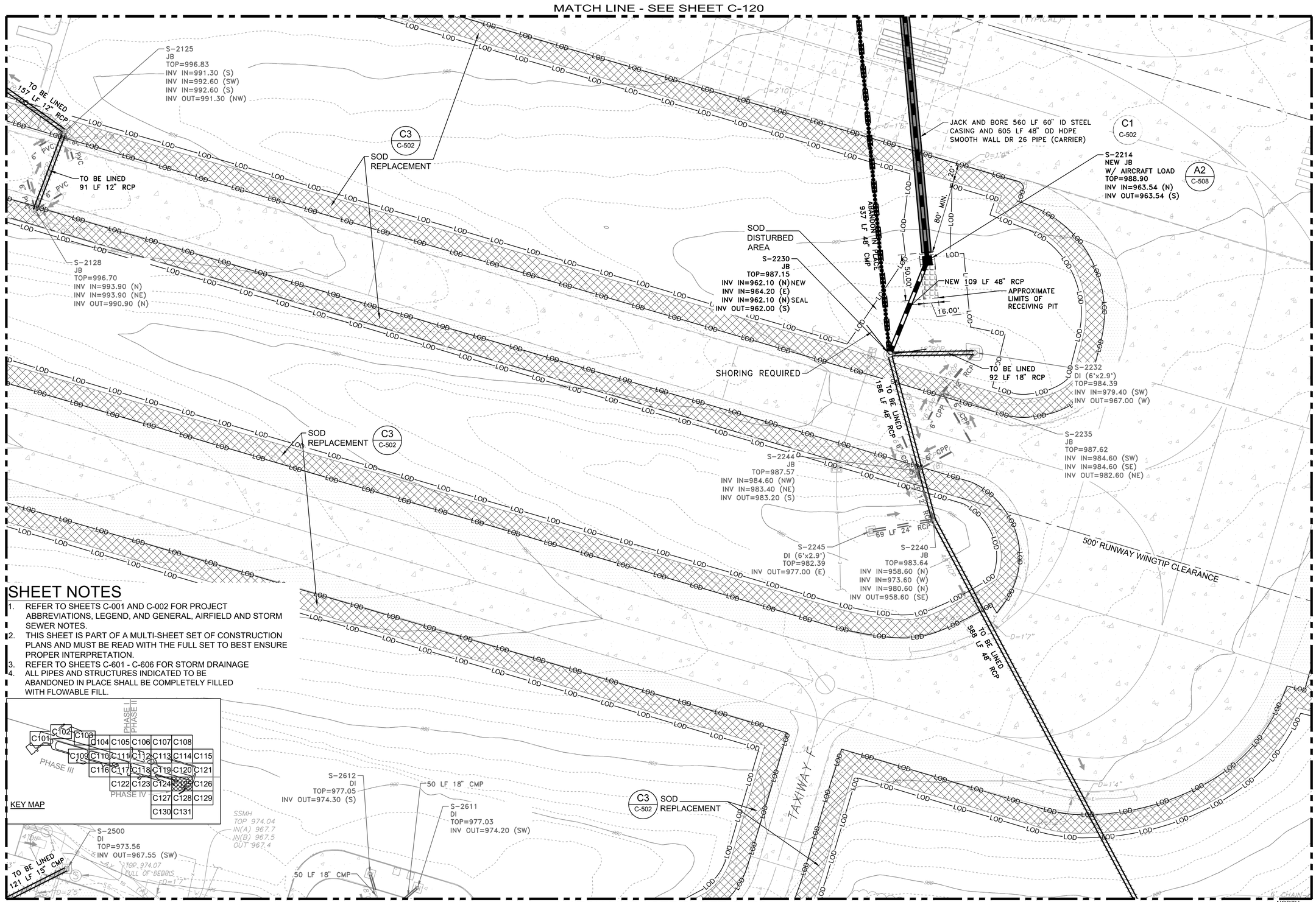

SHEET NOTES

1. REFER TO SHEETS C-001 AND C-002 FOR PROJECT ABBREVIATIONS, LEGEND, AND GENERAL, AIRFIELD AND STORM SEWER NOTES.
2. THIS SHEET IS PART OF A MULTI-SHEET SET OF CONSTRUCTION PLANS AND MUST BE READ WITH THE FULL SET TO BEST ENSURE PROPER INTERPRETATION.
3. REFER TO SHEETS C-601 - C-606 FOR STORM DRAINAGE
4. ALL PIPES AND STRUCTURES INDICATED TO BE ABANDONED IN PLACE SHALL BE COMPLETELY FILLED WITH FLOWABLE FILL.

A1 STORM DRAINAGE PLAN
SCALE: 1" = 50'

US Army Corps of Engineers®
Louisville District

TANYA NORMAN, P.E.
P.E. No. 0038055, GA

GEORGIA REGISTERED No. PE038055 PROFESSIONAL ENGINEER TANYA L. NORMAN

DATE: 01/09/2026

MARK	DESCRIPTION	DATE

DESIGNED BY: T. NORMAN
DRAWN BY: J.P. ARISTIZABAL
CHECKED BY: D.M. LECKIE
SUBMITTED BY: A. DUEHR
ISSUE DATE: JANUARY 9, 2026
SOLICITATION NO.:
CONTRACT NO.:
FILE NUMBER: 4230218
FILE NAME: 470584-C-101(C).dwg
SIZE: ANSI D

U.S. ARMY CORPS OF ENGINEERS
LOUISVILLE DISTRICT
LOUISVILLE, KENTUCKY 40210-0059

POND
3500 PARKWAY LANE
SUITE 500
PEACHTREE CORNERS, GA 30092
PHONE (678) 336-7740
POND JOB No. 1230218

REPAIR & MAINTAIN AIRFIELD STORMWATER SYSTEM
PHASE II
DOBBINS AIR RESERVE BASE, GEORGIA
PROJECT NO.: FGWB 21-0002 & FGWB 25-0006
P2#: 470584

STORM DRAINAGE PLAN

SHEET ID
C-125

CERTIFIED FINAL

FILE PATH: X:\FY23\1230218\04.CAD BIM\04.02.CAD_PH 2 SHEETS\470584-C-101(C) PLOTTED: 01/09/2026 BY: NORMAN, TANYA

MATCH LINE - SEE SHEET C-121

MATCH LINE - SEE SHEET C-125

MATCH LINE - SEE SHEET C-129

SOD REPLACEMENT C3 C-502

SOD REPLACEMENT C3 C-502

CLIN II
CLIN III

500' RUNWAY WINGTIP CLEARANCE

APPROXIMATE LOCATION OF CHAIN-LINK FENCE

WATER LINE

PATROL ROAD

CONCRETE FLUME

PRIVATE ASPHALT ROAD

OBSCURED AREA CONTOURS APPROXIMATE

ASPHALT PATH

AIRFIELD LIGHTS

S-2333
HW
INV OUT=947.60 (S)

S-2331
HW
INV OUT=943.10 (S)
HW 48" RCP
INV 943.31

TO BE LINED
61 LF 48" CMP

S-2332
JB
TOP=949.42
INV IN=942.50 (N)
INV OUT=942.40 (E)

TO BE LINED
51 LF 48" RCP

S-2334
JB
TOP=952.98
INV IN=942.60 (N)
INV IN=941.70 (W)
INV OUT=941.70 (S)

S-2335
HW
INV IN=942.30 (N)

SHEET NOTES

1. REFER TO SHEETS C-001 AND C-002 FOR PROJECT ABBREVIATIONS, LEGEND, AND GENERAL, AIRFIELD AND STORM SEWER NOTES.
2. THIS SHEET IS PART OF A MULTI-SHEET SET OF CONSTRUCTION PLANS AND MUST BE READ WITH THE FULL SET TO BEST ENSURE PROPER INTERPRETATION.
3. REFER TO SHEETS C-601 - C-606 FOR STORM DRAINAGE
4. ALL PIPES AND STRUCTURES INDICATED TO BE ABANDONED IN PLACE SHALL BE COMPLETELY FILLED WITH FLOWABLE FILL.

KEY MAP

PHASE III
PHASE IV
PHA
PHA

C101 C102 C103 C104 C105 C106 C107 C108
C109 C110 C111 C112 C113 C114 C115
C116 C117 C118 C119 C120 C121
C122 C123 C124 C125 C126
C127 C128 C129
C130 C131

A1 STORM DRAINAGE PLAN
SCALE: 1" = 50'

NORTH

0 25' 50' 100' 150'

US Army Corps of Engineers®
Louisville District

TANYA NORMAN, P.E.
P.E. No. 0038055, GA

GEORGIA REGISTERED No. PE038055 PROFESSIONAL ENGINEER TANYA L. NORMAN

DATE: 01/09/2026

MARK	DESCRIPTION	DATE

DESIGNED BY: T. NORMAN
DRAWN BY: J.P. ARISTIZABAL
CHECKED BY: D.M. LEECKE
SUBMITTED BY: A. SUDEHR
SIZE: ANSI D
ISSUE DATE: JANUARY 9, 2026
SOLICITATION NO.:
CONTRACT NO.:
FILE NUMBER: 1230218
FILE NAME: 470584-C-101(C).dwg

U.S. ARMY CORPS OF ENGINEERS
LOUISVILLE DISTRICT
LOUISVILLE, KENTUCKY 40210-0059

POND
POND & COMPANY
3200 CROASDAILE DRIVE, SUITE 500
DURHAM, NORTH CAROLINA 27705
PHONE: (919) 490-4900
FAX: (919) 490-4905

REPAIR & MAINTAIN AIRFIELD STORMWATER SYSTEM
PHASE II
DOBBINS AIR RESERVE BASE, GEORGIA
PROJECT NO.: FGWB 21-0002 & FGWB 25-0006
P2#: 470584

STORM DRAINAGE PLAN

SHEET ID
C-126

CERTIFIED FINAL

FILE PATH: X:\FY23\123021804\CAD BIM\04.02.CAD_PH 2 SHEETS\470584-C-101(C) PLOTTED: 01/09/2026 BY: NORMAN, TANYA

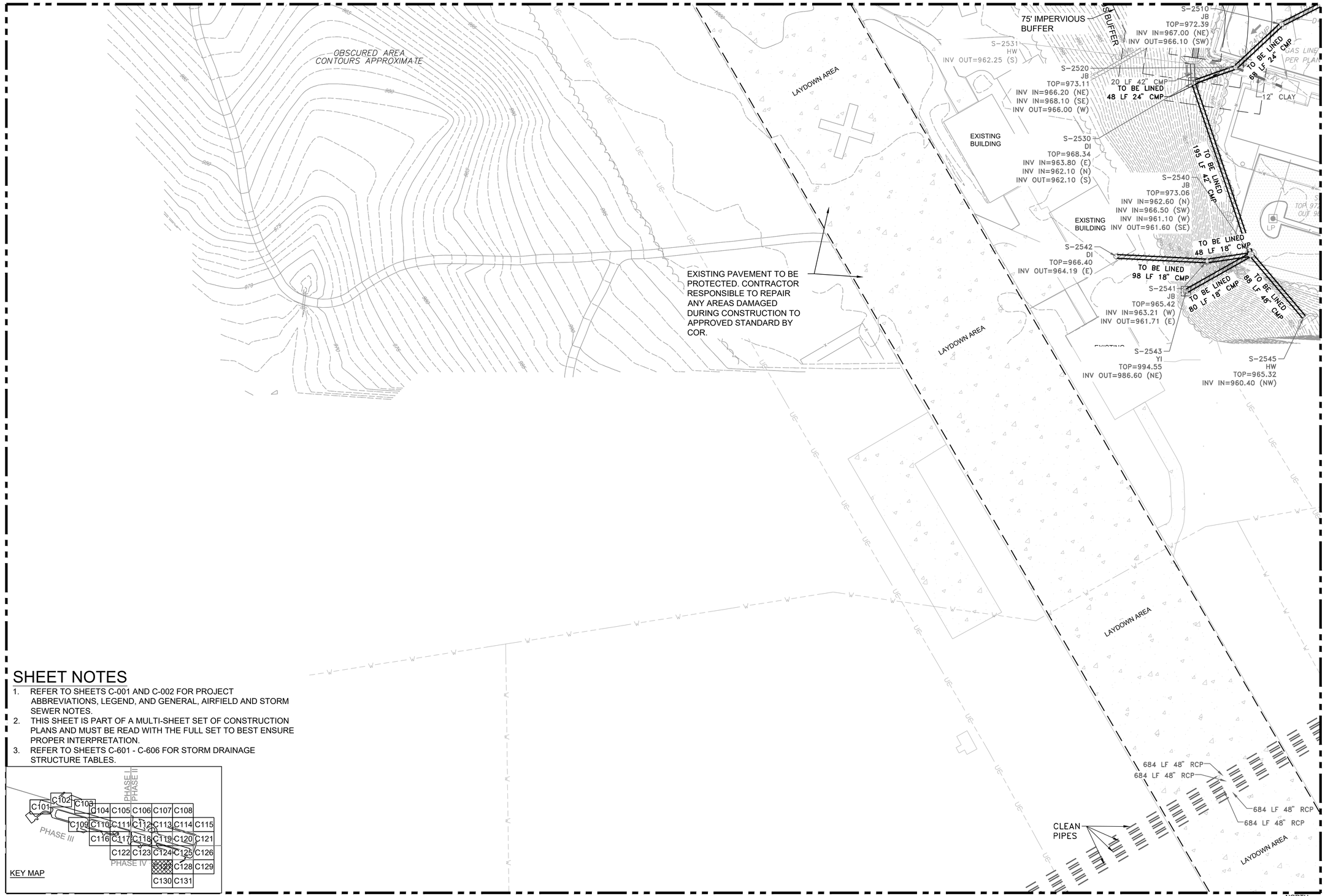

SHEET NOTES

1. REFER TO SHEETS C-001 AND C-002 FOR PROJECT ABBREVIATIONS, LEGEND, AND GENERAL, AIRFIELD AND STORM SEWER NOTES.
2. THIS SHEET IS PART OF A MULTI-SHEET SET OF CONSTRUCTION PLANS AND MUST BE READ WITH THE FULL SET TO BEST ENSURE PROPER INTERPRETATION.
3. REFER TO SHEETS C-601 - C-606 FOR STORM DRAINAGE STRUCTURE TABLES.

A1 STORM DRAINAGE PLAN
SCALE: 1" = 50'

US Army Corps of Engineers®
Louisville District

TANYA NORMAN, P.E.
P.E. No. 0038055, GA

GEORGIA REGISTERED No. PE038055 PROFESSIONAL ENGINEER TANYA L. NORMAN

DATE: 01/09/2026

MARK	DESCRIPTION	DATE

ISSUE DATE: JANUARY 9, 2026
SOLICITATION NO.:
CONTRACT NO.:
FILE NUMBER: 1230218
FILE NAME: 470584-C-101(C).dwg

DESIGNED BY: T. NORMAN
DRAWN BY: J.P. ARISTIZABAL
CHECKED BY: D.M. LECKIE
SUBMITTED BY: A. DUEHR
SIZE: ANSI D

U.S. ARMY CORPS OF ENGINEERS
LOUISVILLE DISTRICT
LOUISVILLE, KENTUCKY 40210-0059

POND
3500 PARKWAY LANE
SUITE 500
PEACHTREE CORNERS, GA 30092
PHONE (678) 336-7740
POND JOB No. 1230218

REPAIR & MAINTAIN AIRFIELD STORMWATER SYSTEM
PHASE II
DOBBINS AIR RESERVE BASE, GEORGIA
PROJECT NO.: FGWB 21-0002 & FGWB 25-0006
P2#: 470584

STORM DRAINAGE PLAN

SHEET ID
C-127

CERTIFIED FINAL

FILE PATH: X:\FY23\1230218\04.CAD BIM\04.02.CAD_PH 2 SHEETS\470584-C-101(C) PLOTTED: 01/09/2026 BY: NORMAN, TANYA

MATCH LINE - SEE SHEET C-125

MATCH LINE - SEE SHEET C-127

MATCH LINE - SEE SHEET C-129

MATCH LINE - SEE SHEET C-131

SOD DISTURBED AREA

REMOVE AND REPLACE 20' OF EXISTING 6'-HIGH CHAIN LINK FENCE

A1 C-514

A3 C-128

RELINE PIPE UNDER BUILDING TO REMAIN (SEE PHOTO LOWER RIGHT)

C3 C-502

SOD REPLACEMENT

C3 C-504

RESTORE PAVEMENT

TO BE LINED 134 LF 24" CMP

TO BE LINED 53 LF 12" CMP

TO BE LINED 68 LF 24" CMP

TO BE LINED 109 LF 24" CMP

TO BE LINED 56 LF 30" CMP

TO BE LINED 154 LF 24" CMP

REMOVE EXISTING 101 LF 24" RCP AND INSTALL 101 LF 24" RCP

TO BE LINED 136 LF 18" CMP

TO BE LINED 153 LF 24" CMP

TO BE LINED 103 LF 24" CMP

TO BE LINED 57 LF 30" CMP

TO BE LINED 156 LF 36" CMP

TO BE LINED 588 LF 48" RCP

TO BE LINED 43 LF 18" CMP

TO BE LINED 31 LF 15" CMP

TO BE LINED 43 LF 15" CMP

TO BE LINED 44 LF 18" CMP

GRADE IN NEW SWALE

CLEAN THE INTERIOR OF THE PIPE.

OBSCURED AREA CONTOURS APPROXIMATE

S-2610 SEDIMENT TANK TOP=976.09 INV IN=973.26 (E) INV OUT=967.19 (W)

S-2620 DI (9.2'x3.7') TOP=972.42 INV IN=969.10 (E) INV OUT=967.30 (W)

S-2630 GI TOP=974.21 INV IN=967.20 (E) INV OUT=967.20 (W)

S-2640 YI TOP=973.03 INV IN=965.90 (E) INV OUT=965.46 (SW)

S-2650 SWCB TOP=971.71 INV IN=965.60 (NE) INV IN=967.10 (W) INV OUT=968.40 (S)

S-2660 SWCB TOP=96779.47 INV IN=967.80 (N) INV IN=967.80 (W) INV OUT=964.40 (SW)

S-2670 GI TOP=970.80 INV IN=963.80 (NE) INV OUT=963.20 (S)

S-2680 HW INV IN=960.94 (N)

S-2690 CB TOP=966.85 INV OUT=962.14 (SW)

S-2695 HW INV IN=959.15 (NE)

S-2700 GI TOP=969.83 INV OUT=964.03 (SE)

S-2710 GI TOP=968.74 INV IN=962.24 (NW) INV OUT=962.14 (SE)

S-2720 GI TOP=968.16 INV IN=960.46 (NW) INV OUT=960.36 (SE)

S-2730 GI TOP=965.32 INV IN=959.52 (NW) INV OUT=958.82 (SE)

S-2740 JB TOP=965.03 INV IN=957.63 (NW) INV OUT=953.73 (S)

S-2760 HW INV IN=944.88 (N)

S-2800 HW INV IN=944.93 (SW)

S-2810 HW INV IN=944.97 (SW)

S-2820 HW INV IN=944.91 (SW)

S-2830 HW INV IN=944.91 (SW)

S-2250 HW INV IN=952.10 (NW)

S-2260 PIPE END INV OUT=950.30 (SW)

S-2262 PIPE INV IN=960.70 (W)

S-2261 FES INV OUT=961.60 (E)

S-2263 HW INV OUT=960.60 (E)

S-2264 PIPE INV IN=951.90 (W)

S-2270 PIPE END INV IN=949.20 (NE)

S-2290 PIPE END INV OUT=947.70 (E)

S-2280 PIPE END INV IN=947.40 (W)

S-2300 HW INV OUT=946.90 (SE)

S-2310 HW INV IN=945.37 (NW)

N=1422147.72 E=2194471.82

N=1422123.32 E=2194552.89

N=1421990.71 E=2185138.33

EL=953.64

SSMH TOP 976.80 IN 964.3 OUT 964.2

SSMH TOP 974.39 IN 961.2 OUT 961.2

SHEET NOTES

1. REFER TO SHEETS C-001 AND C-002 FOR PROJECT ABBREVIATIONS, LEGEND, AND GENERAL, AIRFIELD AND STORM SEWER NOTES.
2. THIS SHEET IS PART OF A MULTI-SHEET SET OF CONSTRUCTION PLANS AND MUST BE READ WITH THE FULL SET TO BEST ENSURE PROPER INTERPRETATION.
3. REFER TO SHEETS C-601 - C-606 FOR STORM DRAINAGE STRUCTURE TABLES.

KEY MAP

PHASE I PHASE II PHASE III PHASE IV

C101 C102 C103 C104 C105 C106 C107 C108 C109 C110 C111 C112 C113 C114 C115 C116 C117 C118 C119 C120 C121 C122 C123 C124 C125 C126 C127 C128 C129 C130 C131

A3 PHOTO OF BUILDING TO REMAIN
SCALE: N.T.S.

A1 STORM DRAINAGE PLAN
SCALE: 1" = 50'

NORTH

0 25' 50' 100' 150'

US Army Corps of Engineers®
Louisville District

TANYA NORMAN, P.E.
P.E. No. 0038055, GA

GEORGIA REGISTERED No. PE038055 PROFESSIONAL ENGINEER TANYA L. NORMAN

DATE: 01/09/2026

MARK	DESCRIPTION	DATE

DESIGNED BY: T. NORMAN
DRAWN BY: J.P. ARISTIZABAL
CHECKED BY: D.M. LECKIE
SUBMITTED BY: A. DUEHR
ANSI D
ISSUE DATE: JANUARY 9, 2026
SOLICITATION NO.:
CONTRACT NO.:
FILE NUMBER: 4230216
FILE NAME: 470584-C-101(C).dwg

U.S. ARMY CORPS OF ENGINEERS
LOUISVILLE DISTRICT
LOUISVILLE, KENTUCKY 40210-0059

POND
3100 BROADWAY LANE
SUITE 500
CHARLESTON, SC 29466
PHONE (843) 330-7750
FAX (843) 330-7751
POND
1075 CENTER DRIVE
SUITE 200
VENTURA, CA 93003
PHONE (805) 642-2040
FAX (805) 642-2041

REPAIR & MAINTAIN AIRFIELD STORMWATER SYSTEM PHASE II
DOBBINS AIR RESERVE BASE, GEORGIA
PROJECT NO.: FGWB 21-0002 & FGWB 25-0006
P2#: 470584

STORM DRAINAGE PLAN

SHEET ID
C-128

CERTIFIED FINAL

FILE PATH: X:\FY23\123021804.CAD BIM\04.02.CAD_PH 2 SHEETS\470584-C-101(C) PLOTTED: 01/09/2026 BY: NORMAN, TANYA

MATCH LINE - SEE SHEET C-126

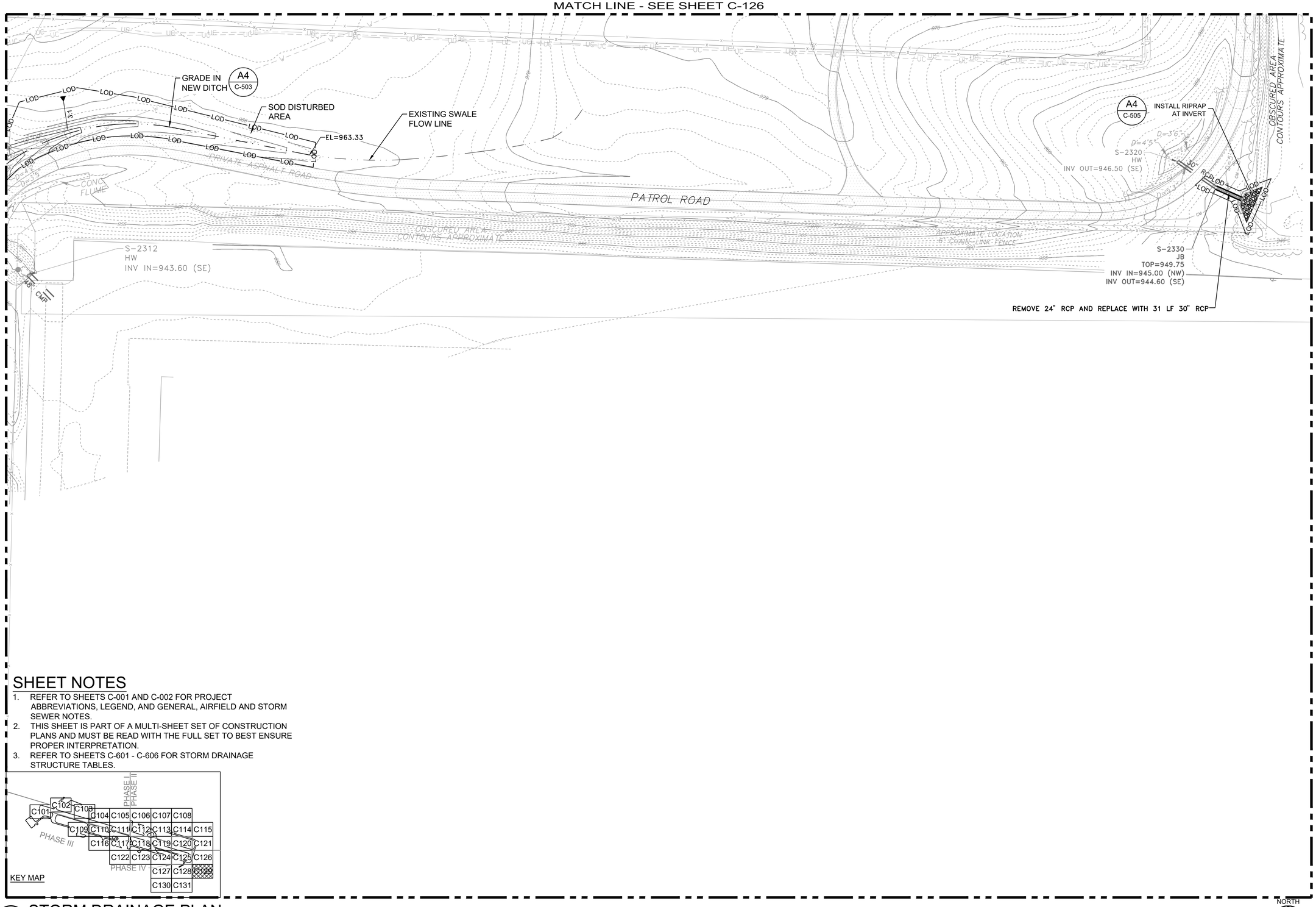

MATCH LINE - SEE SHEET C-128

SHEET NOTES

1. REFER TO SHEETS C-001 AND C-002 FOR PROJECT ABBREVIATIONS, LEGEND, AND GENERAL, AIRFIELD AND STORM SEWER NOTES.
2. THIS SHEET IS PART OF A MULTI-SHEET SET OF CONSTRUCTION PLANS AND MUST BE READ WITH THE FULL SET TO BEST ENSURE PROPER INTERPRETATION.
3. REFER TO SHEETS C-601 - C-606 FOR STORM DRAINAGE STRUCTURE TABLES.

A1 STORM DRAINAGE PLAN

SCALE: 1" = 50'

NORTH

0 25' 50' 100' 150'

US Army Corps of Engineers®
Louisville District

TANYA NORMAN, P.E.
P.E. No. 0038055, GA

GEORGIA REGISTERED No. PE038055 PROFESSIONAL ENGINEER TANYA L. NORMAN

DATE: 01/09/2026

MARK	DESCRIPTION	DATE

DESIGNED BY: T. NORMAN
DRAWN BY: J.P. ARISTIZABAL
CHECKED BY: D.M. LECKIE
SUBMITTED BY: A. DUEHR
SIZE: ANSI D
ISSUE DATE: JANUARY 9, 2026
SOLICITATION NO.:
CONTRACT NO.:
FILE NUMBER: 4230216
FILE NAME: 470584-C-101(C).dwg

U.S. ARMY CORPS OF ENGINEERS
LOUISVILLE DISTRICT
LOUISVILLE, KENTUCKY 40210-0059

POND
POND & COMPANY
3530 PIEDMONT ROAD NE, SUITE 300, ATLANTA, GEORGIA 30305
PHONE (678) 336-2749
POND PROJECT NO. 170584

REPAIR & MAINTAIN AIRFIELD STORMWATER SYSTEM
PHASE II
DOBBINS AIR RESERVE BASE, GEORGIA
PROJECT NO.: FGWB 21-0002 & FGWB 25-0006
P2#: 470584

STORM DRAINAGE PLAN

SHEET ID
C-129

CERTIFIED FINAL

FILE PATH: X:\FY23\123021604.CAD BIM\04.02.CAD_PH 2 SHEETS\470584-C-101(C) PLOTTED: 01/09/2026 BY: NORMAN, TANYA

MATCH LINE - SEE SHEET C-127

S-2805
HW
TOP=953.47
INV OUT=948.55 (NE)

S-2815
HW
TOP=953.58
INV OUT=948.66 (NE)

S-2825
HW
TOP=953.47
INV OUT=948.55 (NE)

CLEAN PIPES

S-2835
HW
TOP=953.42
INV OUT=948.50 (NE)

LAYDOWN AREA

EXISTING PAVEMENT TO BE PROTECTED. CONTRACTOR RESPONSIBLE TO REPAIR ANY AREAS DAMAGED DURING CONSTRUCTION TO APPROVED STANDARD BY COR.

UE

MATCH LINE - SEE SHEET C-131

SHEET NOTES

1. REFER TO SHEETS C-001 AND C-002 FOR PROJECT ABBREVIATIONS, LEGEND, AND GENERAL, AIRFIELD AND STORM SEWER NOTES.
2. THIS SHEET IS PART OF A MULTI-SHEET SET OF CONSTRUCTION PLANS AND MUST BE READ WITH THE FULL SET TO BEST ENSURE PROPER INTERPRETATION.
3. REFER TO SHEETS C-601 - C-606 FOR STORM DRAINAGE STRUCTURE TABLES.

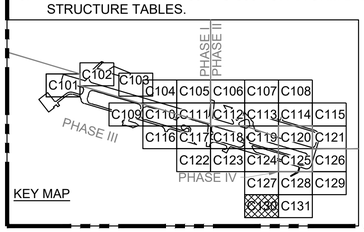

KEY MAP

A1 STORM DRAINAGE PLAN
SCALE: 1" = 50'

NORTH

0 25' 50' 100' 150'

US Army Corps of Engineers®
Louisville District

TANYA NORMAN, P.E.
P.E. No. 0038055, GA

GEORGIA REGISTERED No. PE038055 PROFESSIONAL ENGINEER TANYA L. NORMAN

DATE: 01/09/2026

MARK	DESCRIPTION	DATE

DESIGNED BY:	T. NORMAN
DRAWN BY:	J.P. ARISTIZABAL
CHECKED BY:	D.M. LECKIE
SUBMITTED BY:	A. DUERR
SIZE:	ANSI D
ISSUE DATE:	JANUARY 9, 2026
SOLICITATION NO.:	
CONTRACT NO.:	
FILE NUMBER:	423026
FILE NAME:	470584-C-101(C).dwg

U.S. ARMY CORPS OF ENGINEERS
LOUISVILLE DISTRICT
LOUISVILLE, KENTUCKY 40210-0059

POND
3301 BUFORD HWY, NE
SUITE 300
BUFORD, GEORGIA 30519
PHONE (678) 336-2700
FAX (678) 336-2701
POND PROJECT NO. 170528

REPAIR & MAINTAIN AIRFIELD STORMWATER SYSTEM
PHASE II
DOBBINS AIR RESERVE BASE, GEORGIA
PROJECT NO.: FGWB 21-0002 & FGWB 25-0006
P2#: 470584

STORM DRAINAGE PLAN

SHEET ID
C-130

CERTIFIED FINAL

FILE PATH: X:\PY23\123021804.CAD BIM\04.02.CAD_PH 2 SHEETS\470584-C-101(C) PLOTTED: 01/09/2026 BY: NORMAN, TANYA

MATCH LINE - SEE SHEET C-128

MATCH LINE - SEE SHEET C-130

LAYDOWN AREA

LAYDOWN AREA

LAYDOWN AREA

LAYDOWN AREA

LAYDOWN AREA MUST BE COORDINATED WITH DARB CONTRACTING OFFICER

EXISTING PAVEMENT TO BE PROTECTED. CONTRACTOR RESPONSIBLE TO REPAIR ANY AREAS DAMAGED DURING CONSTRUCTION TO APPROVED STANDARD BY COR.

CONTRACTOR ACCESS

SHEET NOTES

1. REFER TO SHEETS C-001 AND C-002 FOR PROJECT ABBREVIATIONS, LEGEND, AND GENERAL, AIRFIELD AND STORM SEWER NOTES.
2. THIS SHEET IS PART OF A MULTI-SHEET SET OF CONSTRUCTION PLANS AND MUST BE READ WITH THE FULL SET TO BEST ENSURE PROPER INTERPRETATION.
3. REFER TO SHEETS C-601 - C-606 FOR STORM DRAINAGE STRUCTURE TABLES.

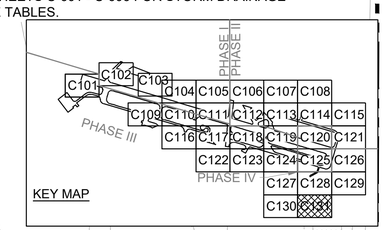

KEY MAP

A1 STORM DRAINAGE PLAN

SCALE: 1" = 50'

NORTH

0 25' 50' 100' 150'

US Army Corps of Engineers®
Louisville District

TANYA NORMAN, P.E.
P.E. No. 0038055, GA

GEORGIA REGISTERED No. PE038055 PROFESSIONAL ENGINEER TANYA L. NORMAN

DATE: 01/09/2026

MARK	DESCRIPTION	DATE

DESIGNED BY: T. NORMAN
DRAWN BY: J.P. ARISTIZABAL
CHECKED BY: D.M. LECKIE
SUBMITTED BY: A. DUEHR
SIZE: ANSI D
ISSUE DATE: JANUARY 9, 2026
SOLICITATION NO.:
CONTRACT NO.:
FILE NUMBER: 1230216
FILE NAME: 470584-C-101(C).dwg

U.S. ARMY CORPS OF ENGINEERS
LOUISVILLE DISTRICT
LOUISVILLE, KENTUCKY 40210-0059

POND
POND
3940 GLENBROOK LANE
SUITE 500
DAVENPORT, IOWA 52807
PHONE (563) 326-2763
FAX (563) 344-1079
ATLANTA, GA 30092

REPAIR & MAINTAIN AIRFIELD STORMWATER SYSTEM
PHASE II
DOBBINS AIR RESERVE BASE, GEORGIA
PROJECT NO.: FGWB 21-0002 & FGWB 25-0006
P2#: 470584

STORM DRAINAGE PLAN

SHEET ID

C-131

CERTIFIED FINAL

FILE PATH: X:\FY23\12302\8\04.02.CAD_PH 2 SHEETS\470584-C-101(C) PLOTTED: 01/09/2026 BY: NORMAN, TANYA

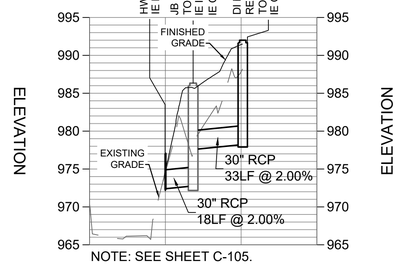

NOTE: SEE SHEET C-105.

STATION

S-330-S-340 PROFILE
HORZ. SCALE 1"= 50'
VERT. SCALE 1"= 10'

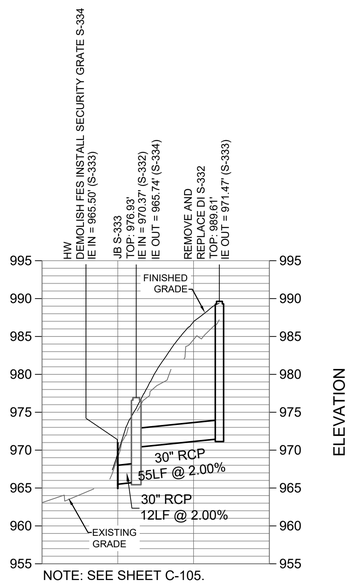

NOTE: SEE SHEET C-105.

STATION

S-334-S-332 PROFILE
HORZ. SCALE 1"= 50'
VERT. SCALE 1"= 10'

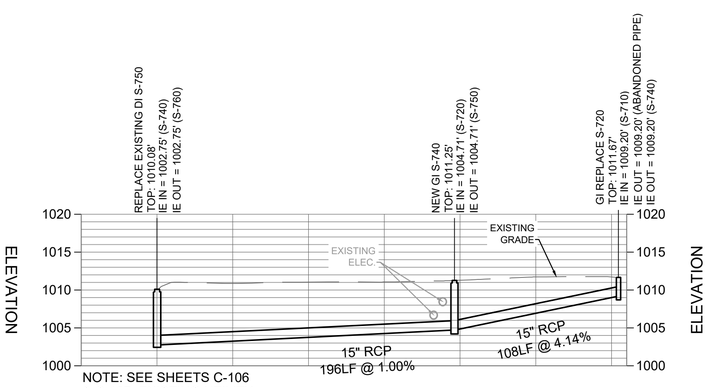

NOTE: SEE SHEETS C-106 & C-107. EXISTING UTILITY CROSSING LOCATIONS AND DEPTHS ARE APPROXIMATE AND MUST BE VERIFIED IN THE FIELD PRIOR TO CONSTRUCTION.

STATION

S-730-S-750 PROFILE
HORZ. SCALE 1"= 50'
VERT. SCALE 1"= 10'

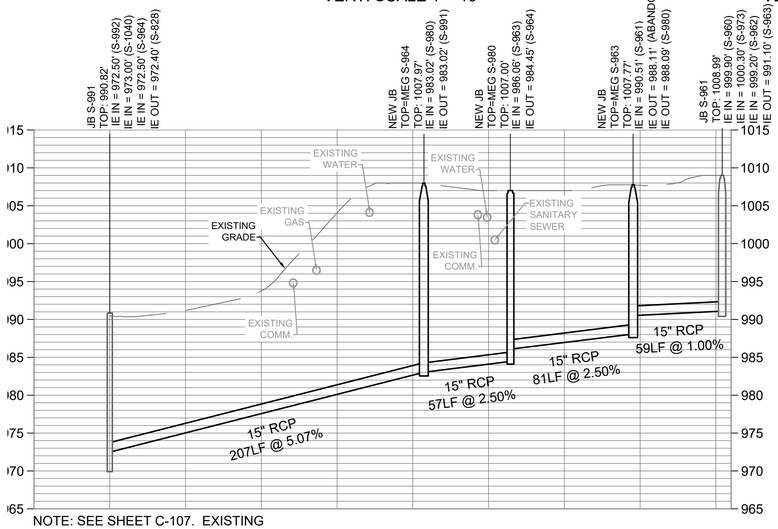

NOTE: SEE SHEET C-107. EXISTING UTILITY CROSSING LOCATIONS AND DEPTHS ARE APPROXIMATE AND MUST BE VERIFIED IN THE FIELD PRIOR TO CONSTRUCTION.

STATION

S-961-S-964 PROFILE
HORZ. SCALE 1"= 50'
VERT. SCALE 1"= 10'

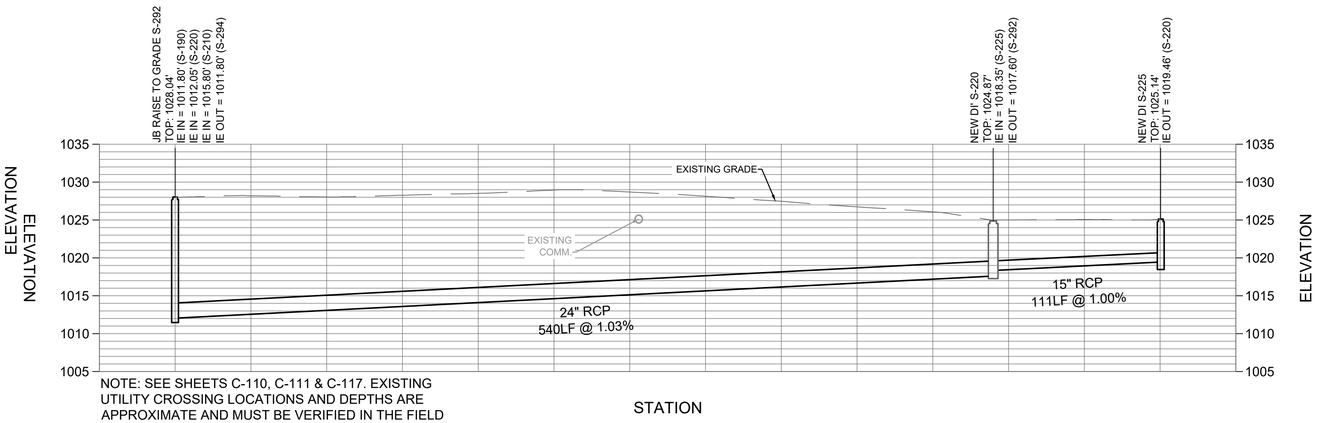

NOTE: SEE SHEETS C-110, C-111 & C-117. EXISTING UTILITY CROSSING LOCATIONS AND DEPTHS ARE APPROXIMATE AND MUST BE VERIFIED IN THE FIELD PRIOR TO CONSTRUCTION.

STATION

S-225-S-292 PROFILE
HORZ. SCALE 1"= 50'
VERT. SCALE 1"= 10'

A1 STORM DRAINAGE PROFILES
SCALE: 1" = 50'

NORTH

0 25' 50' 100' 150'

US Army Corps of Engineers®
Louisville District

TANYA NORMAN, P.E.
P.E. No. 0038055, GA

GEORGIA REGISTERED No. PE038055 PROFESSIONAL ENGINEER TANYA L. NORMAN

DATE: 01/09/2026

MARK	DESCRIPTION	DATE

DESIGNED BY: T. NORMAN
DRAWN BY: J.P. ARISTIZABAL
CHECKED BY: D.MI. LECKIE
SUBMITTED BY: A. ZEHENTBAUER
ANSI D
ISSUE DATE: JANUARY 9, 2026
SOLICITATION NO.:
CONTRACT NO.:
FILE NUMBER: 1230216
FILE NAME: 470584-C-101(E).dwg

U.S. ARMY CORPS OF ENGINEERS
LOUISVILLE DISTRICT
LOUISVILLE, KENTUCKY 40210-0059

POND
POND & COMPANY
3330 OLIVE STREET, SUITE 500 ST. LOUIS, MO 63103
3200 WINDY HILL ROAD, SUITE 1600W ATLANTA, GA 30339
PHONE (678) 539-2700
PHONE (678) 539-2719

REPAIR & MAINTAIN AIRFIELD STORMWATER SYSTEM PHASE II
DOBBINS AIR RESERVE BASE, GEORGIA
PROJECT NO.: FGWB 21-0002 & FGWB 25-0006
P2#: 470584

STORM DRAINAGE PLAN

SHEET ID
C-201

CERTIFIED FINAL

FILE PATH: X:\FY23\123021604.CAD BIM\04.02.CAD_PH 2 SHEETS\470584-C-101(E) PLOTTED: 01/09/2026 BY: NORMAN, TANYA

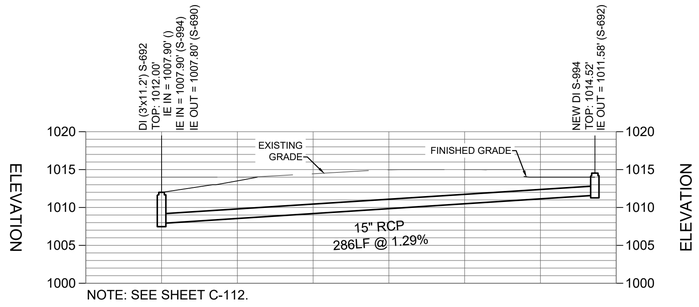

S-692-S-994 PROFILE
HORZ. SCALE 1"= 50'
VERT. SCALE 1"= 10'

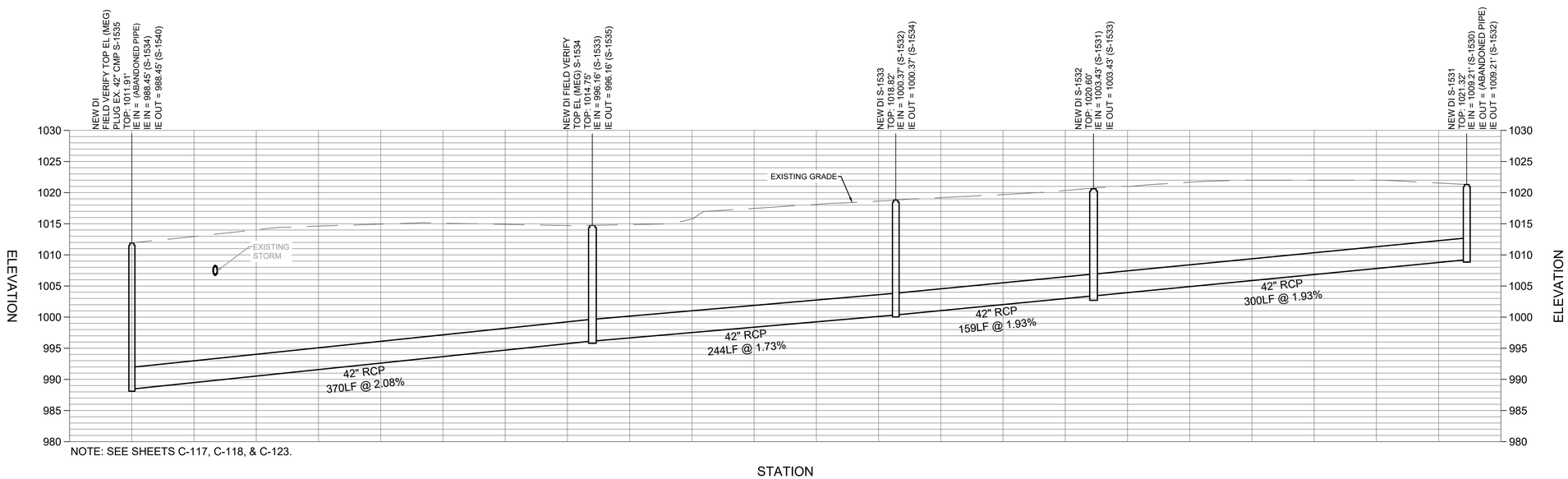

S-1531-S-1535 PROFILE
HORZ. SCALE 1"= 50'
VERT. SCALE 1"= 10'

A1 STORM DRAINAGE PROFILES
SCALE: 1" = 50'

NORTH
0 25' 50' 100' 150'

US Army Corps of Engineers®
Louisville District

TANYA NORMAN, P.E.
P.E. No. 0038055, GA

GEORGIA REGISTERED No. PE038055 PROFESSIONAL ENGINEER TANYA L. NORMAN

DATE: 01/09/2026

MARK	DESCRIPTION	DATE

ISSUE DATE: JANUARY 9, 2026
SOLICITATION NO.:
CONTRACT NO.:
FILE NUMBER: 1230218
FILE NAME: 470584-C-101(E).dwg

DESIGNED BY: T. NORMAN
DRAWN BY: J.P. ARISTIZABAL
CHECKED BY: D.M. LECKIE
SUBMITTED BY: A. DUEHR
SIZE: ANSI D

U.S. ARMY CORPS OF ENGINEERS
LOUISVILLE DISTRICT
LOUISVILLE, KENTUCKY 40210-0059

POND
3500 PARKWAY LANE
SUITE 500
PEACHTREE CORNERS, GA 30092
PHONE (678) 336-7750
POND JOB No. 1230218

REPAIR & MAINTAIN AIRFIELD STORMWATER SYSTEM
PHASE II
DOBBINS AIR RESERVE BASE, GEORGIA
PROJECT NO.: FGWB 21-0002 & FGWB 25-0006
P2#: 470584

STORM DRAINAGE PLAN

SHEET ID
C-202

CERTIFIED FINAL

FILE PATH: X:\FY23\1230218\04.CAD BIM\04.02.CAD_PH 2 SHEETS\470584-C-101(E) PLOTTED: 01/09/2026 BY: NORMAN, TANYA

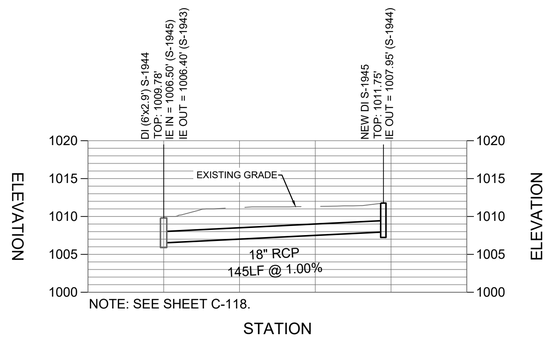

S-1944-S-1945 PROFILE
HORZ. SCALE 1"= 50'
VERT. SCALE 1"= 10'

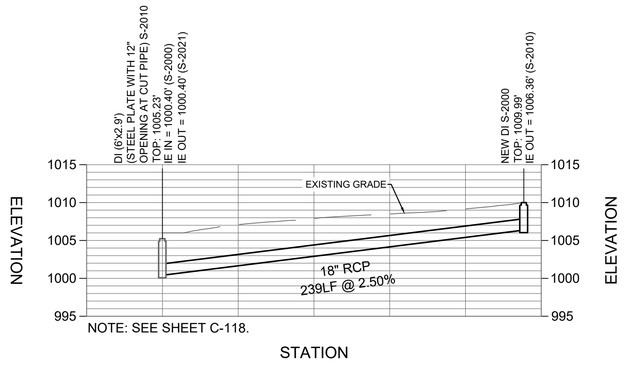

S-2010-S-2000 PROFILE
HORZ. SCALE 1"= 50'
VERT. SCALE 1"= 10'

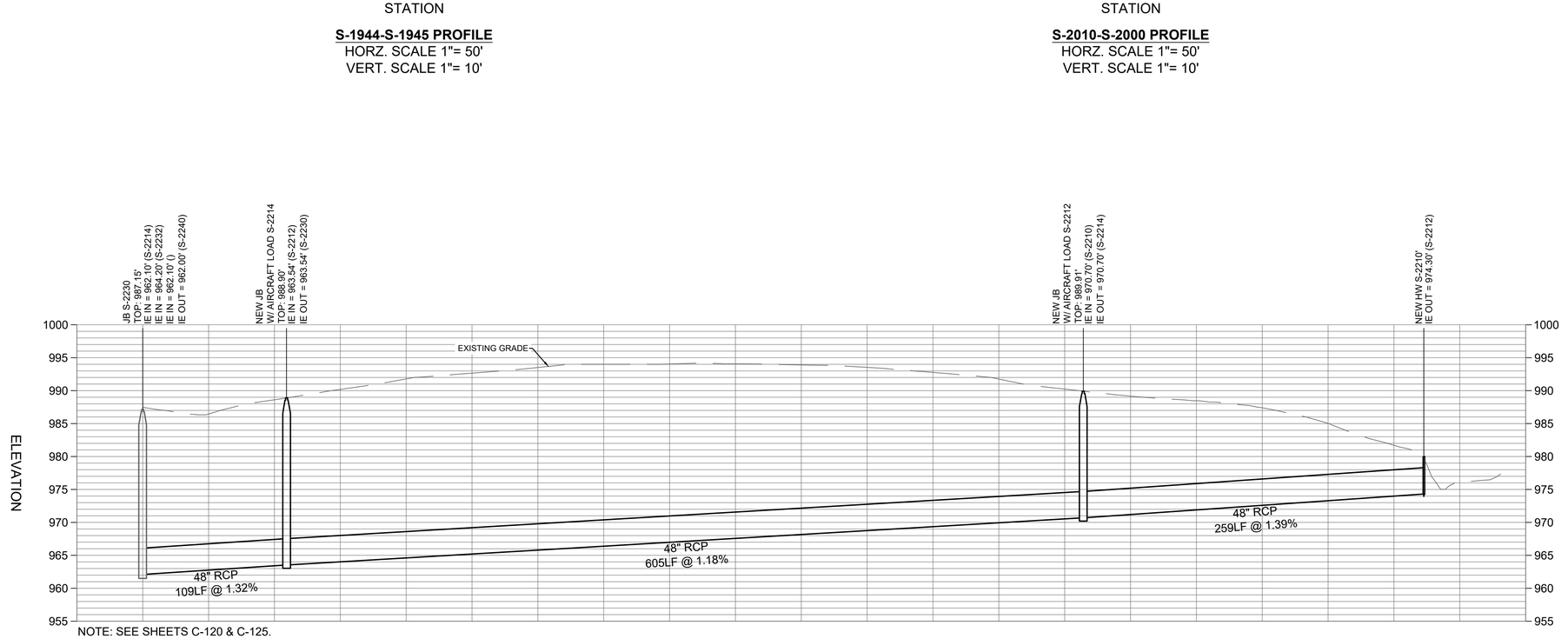

S-2230-S-2212 PROFILE
HORZ. SCALE 1"= 50'
VERT. SCALE 1"= 10'

A1 STORM DRAINAGE PROFILES
SCALE: 1" = 50'

NORTH
0 25' 50' 100' 150'

US Army Corps of Engineers®
Louisville District

TANYA NORMAN, P.E.
P.E. No. 0038055, GA
GEORGIA REGISTERED No. PE038055 PROFESSIONAL ENGINEER TANYA L. NORMAN
DATE: 01/09/2026

MARK	DESCRIPTION	DATE

ISSUE DATE: JANUARY 9, 2026
SOLICITATION NO.:
CONTRACT NO.:
FILE NUMBER: 1230216
FILE NAME: 470584-C-101(E).dwg

DESIGNED BY: T. NORMAN
DRAWN BY: J.P. ARISTIZABAL
CHECKED BY: D.M. LECKIE
SUBMITTED BY: A. DUEHR
SIZE: ANSI D

U.S. ARMY CORPS OF ENGINEERS
LOUISVILLE DISTRICT
LOUISVILLE, KENTUCKY 40210-0059

POND
POND & COMPANY
SUITE 500
1970 BROADMOOR AVE.
SEVEN SPRINGS, COOSA, GA 30092
PHONE (678) 580-7470
PHONE (678) 580-7472
WWW.POND.COM

REPAIR & MAINTAIN AIRFIELD STORMWATER SYSTEM
PHASE II
DOBBINS AIR RESERVE BASE, GEORGIA
PROJECT NO.: FGWB 21-0002 & FGWB 25-0006
P2#: 470584

STORM DRAINAGE PLAN

SHEET ID
C-203

CERTIFIED FINAL

FILE PATH: X:\PY23\123021604.CAD BIM\04.02.CAD_PH 2 SHEETS\470584-C-101(E) PLOTTED: 01/09/2026 BY: NORMAN, TANYA

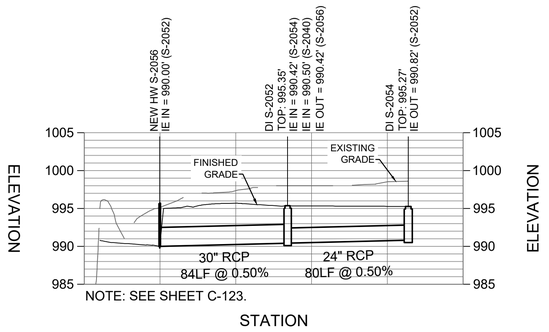

S-2052-S-2054 PROFILE
HORZ. SCALE 1"= 50'
VERT. SCALE 1"= 10'

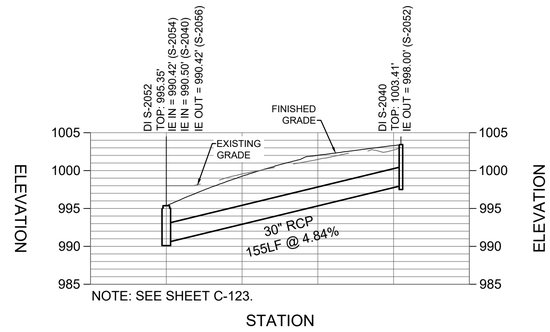

S-2052-S-2040 PROFILE
HORZ. SCALE 1"= 50'
VERT. SCALE 1"= 10'

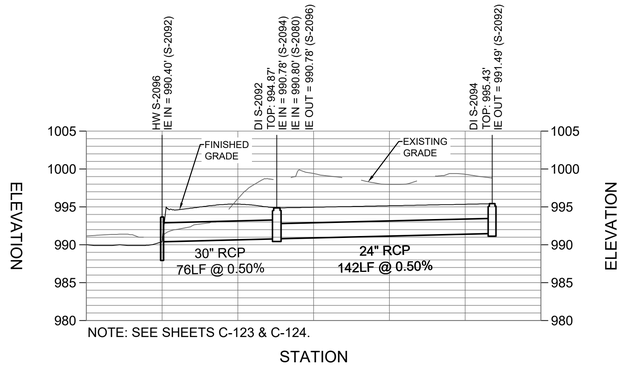

S-2092-S-2094 PROFILE
HORZ. SCALE 1"= 50'
VERT. SCALE 1"= 10'

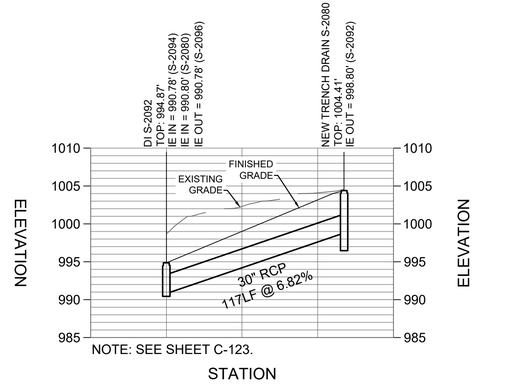

S-2092-S-2080 PROFILE
HORZ. SCALE 1"= 50'
VERT. SCALE 1"= 10'

A1 STORM DRAINAGE PROFILES
SCALE: 1" = 50'

NORTH
0 25' 50' 100' 150'

US Army Corps of Engineers®
Louisville District

TANYA NORMAN, P.E.
P.E. No. 0038055, GA
GEORGIA REGISTERED No. PE038055 PROFESSIONAL ENGINEER TANYA L. NORMAN
DATE: 01/09/2026

MARK	DESCRIPTION	DATE

DESIGNED BY: T. NORMAN
DRAWN BY: J.P. ARISTIZABAL
CHECKED BY: D.M. LECKIE
SUBMITTED BY: A. DUEHR
SIZE: ANSI D
ISSUE DATE: JANUARY 9, 2026
SOLICITATION NO.:
CONTRACT NO.:
FILE NUMBER: 1230216
FILE NAME: 470584-C-101(E).dwg

U.S. ARMY CORPS OF ENGINEERS
LOUISVILLE DISTRICT
LOUISVILLE, KENTUCKY 40210-0059

POND
POND & COMPANY
3200 WATERVIEW PARKWAY, SUITE 300, RICHARDSON, TEXAS 75080
PHONE (972) 536-2716
FIRM REGISTRATION NO. F-12869
PHONE (678) 336-2749
FIRM REGISTRATION NO. F-12869, GA-3000

REPAIR & MAINTAIN AIRFIELD STORMWATER SYSTEM
PHASE II
DOBBINS AIR RESERVE BASE, GEORGIA
PROJECT NO.: FGWB 21-0002 & FGWB 25-0006
P2#: 470584

STORM DRAINAGE PLAN

SHEET ID
C-204

FILE PATH: X:\FY23\123021604.CAD BIM\04.02.CAD_PH 2 SHEETS\470584-C-101(E) PLOTTED: 01/09/2026 BY: NORMAN, TANYA

CERTIFIED FINAL

SHEET NOTES

1. REFER TO SHEETS C-001 AND C-002 FOR PROJECT ABBREVIATIONS, LEGEND, AND GENERAL, AIRFIELD AND STORM SEWER NOTES.
2. THIS SHEET IS PART OF A MULTI-SHEET SET OF CONSTRUCTION PLANS AND MUST BE READ WITH THE FULL SET TO BEST ENSURE PROPER INTERPRETATION.
3. REFER TO SHEETS C-601 - C-606 FOR STORM DRAINAGE STRUCTURE TABLES.

MATCH LINE - SEE SHEET C-105

MATCH LINE - SEE SHEET C-106

MATCH LINE - SEE SHEET C-111

MATCH LINE - SEE SHEET C-112

REMOVE EXISTING 413 LF 30"CMP AND INSTALL 413 LF 30" RCP

REMOVE EXISTING TREES FOR PIPE INSTALLATION

SOD DISTURBED AREA

C3 / C-502 SOD REPLACEMENT

KEY MAP

CLIN I

CLIN II

CLIN III

CLIN IV

BENCHMARK "60D NAIL"
GEO #3888
N:1,425,055.94
E:2,190,765.07
EL:1,019.04

S-290
JB 6.5 DIA
RAISE TOP
TOP=1013.50
INV IN=999.00 (SE)
INV OUT=999.00 (NW)

TO BE LINED
128 LF 30" RCP

S-293
DI NEW INLET
TOP=1018.11
INV IN=999.80 (SE)
INV OUT=999.80 (NW)

TO BE LINED
398 LF 30" RCP

D=0'

D=16'

NORTH

0 10' 20' 40' 60'

A1 ENLARGEMENT PLAN
SCALE: 1" = 20'

US Army Corps of Engineers®
Louisville District

TANYA NORMAN, P.E.
P.E. No. 0038055, GA
GEORGIA REGISTERED No. PE038055 PROFESSIONAL ENGINEER TANYA L. NORMAN
DATE: 01/09/2026

MARK	DESCRIPTION	DATE

DESIGNED BY: T. NORMAN
DRAWN BY: J.P. ARISTIZABAL
CHECKED BY: D.M. LECKIE
SUBMITTED BY: A. DUEHR
SIZE: ANSI D
ISSUE DATE: JANUARY 9, 2026
SOLICITATION NO.:
CONTRACT NO.:
FILE NUMBER: 423026
FILE NAME: 470584-C-101(D).dwg

U.S. ARMY CORPS OF ENGINEERS
LOUISVILLE DISTRICT
LOUISVILLE, KENTUCKY 40210-0059

POND
3011 E. 500 WAY LANE
SUITE 500
CLEARWATER, FLORIDA 33759
PHONE (678) 539-2700
FAX (404) 941-1525

REPAIR & MAINTAIN AIRFIELD STORMWATER SYSTEM
PHASE II
DOBBINS AIR RESERVE BASE, GEORGIA
PROJECT NO.: FGWB 21-0002 & FGWB 25-0006
P2#: 470584
ENLARGED STORM DRAINAGE PLAN

SHEET ID
C-401

FILE PATH: X:\PY23\123021804\CAD BIM\04.02.CADD_PH 2 SHEETS\470584-C-101(D) PLOTTED: 01/09/2026 BY: NORMAN, TANYA

CERTIFIED FINAL

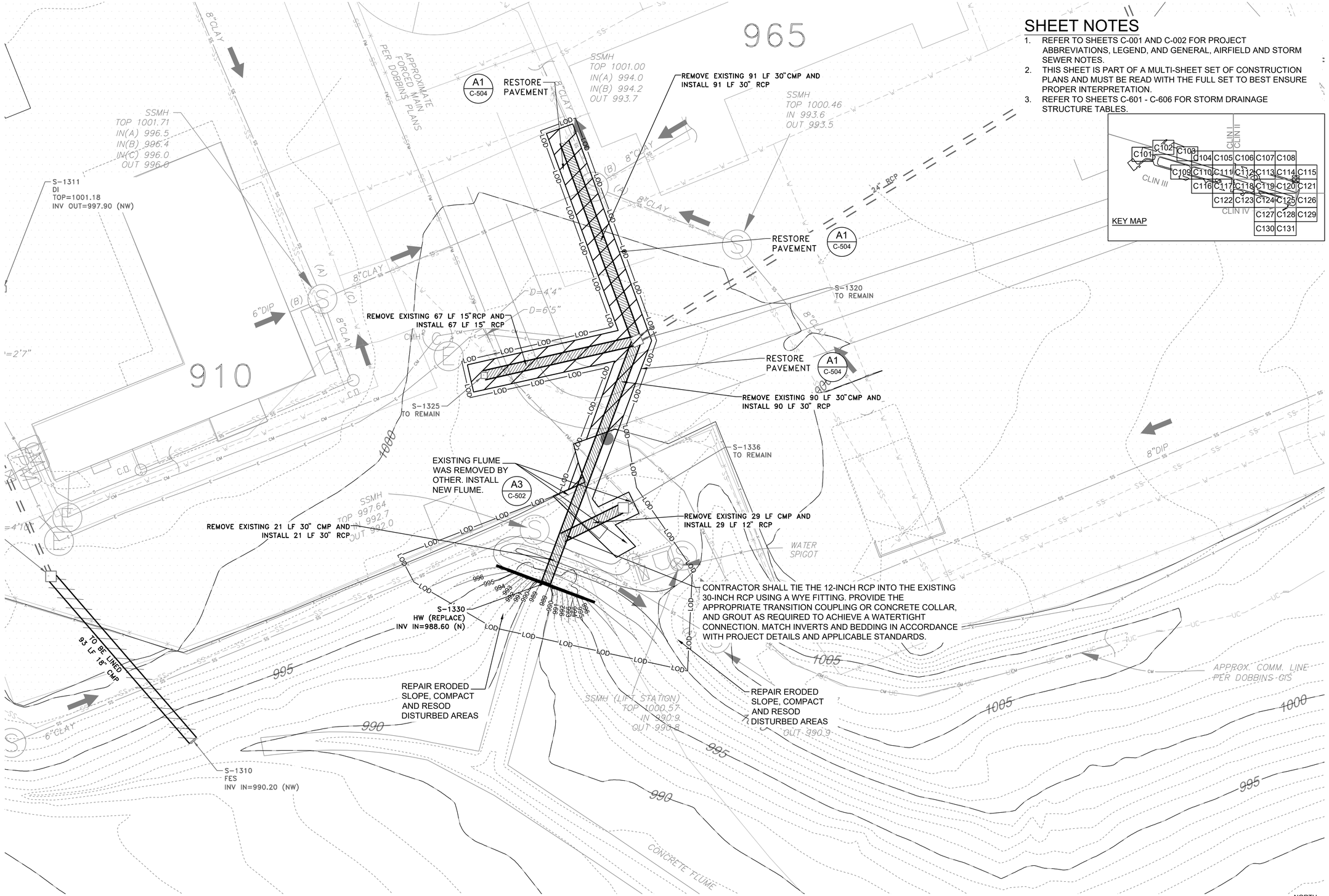

SHEET NOTES

1. REFER TO SHEETS C-001 AND C-002 FOR PROJECT ABBREVIATIONS, LEGEND, AND GENERAL, AIRFIELD AND STORM SEWER NOTES.
2. THIS SHEET IS PART OF A MULTI-SHEET SET OF CONSTRUCTION PLANS AND MUST BE READ WITH THE FULL SET TO BEST ENSURE PROPER INTERPRETATION.
3. REFER TO SHEETS C-601 - C-606 FOR STORM DRAINAGE STRUCTURE TABLES.

A1 ENLARGEMENT PLAN
SCALE: 1" = 20'

US Army Corps of Engineers®
Louisville District

TANYA NORMAN, P.E.
P.E. No. 0038055, GA

GEORGIA REGISTERED No. PE038055 PROFESSIONAL ENGINEER TANYA L. NORMAN

DATE: 01/09/2026

MARK	DESCRIPTION	DATE

DESIGNED BY: T. NORMAN
DRAWN BY: J.P. ARISTIZABAL
CHECKED BY: D.M. LECKIE
SUBMITTED BY: A. DUEHR
SIZE: ANSI D
ISSUE DATE: JANUARY 9, 2026
SOLICITATION NO.:
CONTRACT NO.:
FILE NUMBER: 1230218
FILE NAME: 470584-C-101(D).dwg

U.S. ARMY CORPS OF ENGINEERS
LOUISVILLE DISTRICT
LOUISVILLE, KENTUCKY 40210-0059

POND
3500 PARKWAY LANE
SUITE 500
PEACHTREE CORNERS, GA 30092
PHONE (678) 336-7760
FAX (678) 336-7762
POND JOB No. 1230218

REPAIR & MAINTAIN AIRFIELD STORMWATER SYSTEM
PHASE II
DOBBINS AIR RESERVE BASE, GEORGIA
PROJECT NO.: FGWB 21-0002 & FGWB 25-0006
P2#: 470584
ENLARGED STORM DRAINAGE PLAN

SHEET ID
C-402

CERTIFIED FINAL

FILE PATH: X:\FY23\1230218\04.CAD BIM\04.02.CAD_PH 2 SHEETS\470584-C-101(D) PLOTTED: 01/09/2026 BY: NORMAN, TANYA

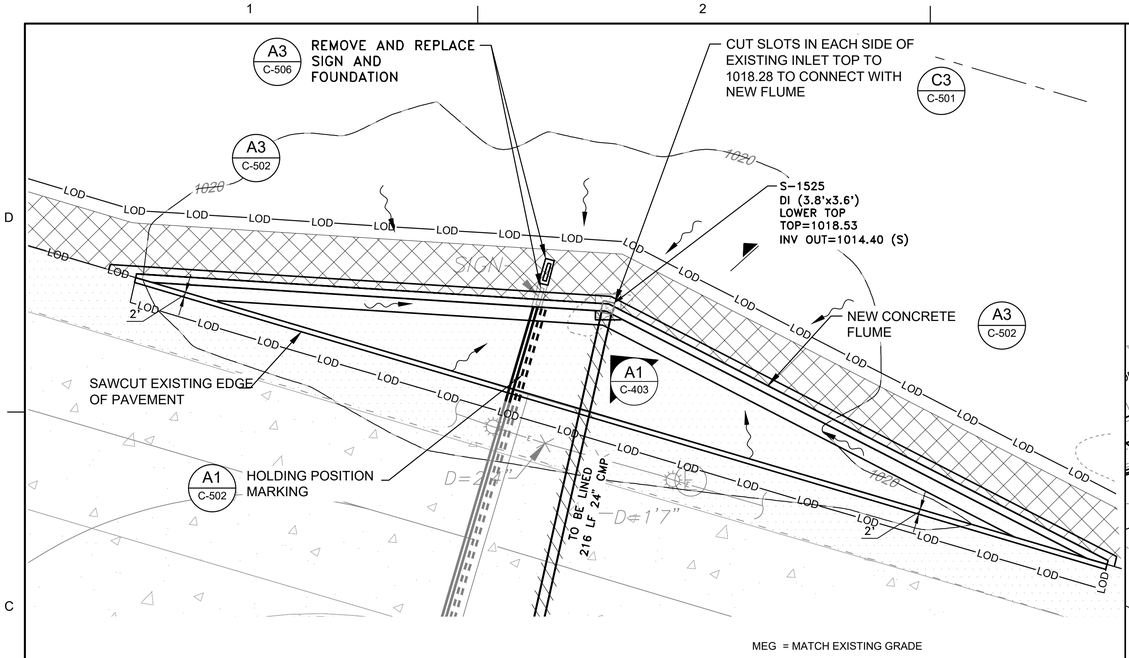

C1 ENLARGED PLAN (SEE SHEET C-117)

SCALE: 1" = 30'

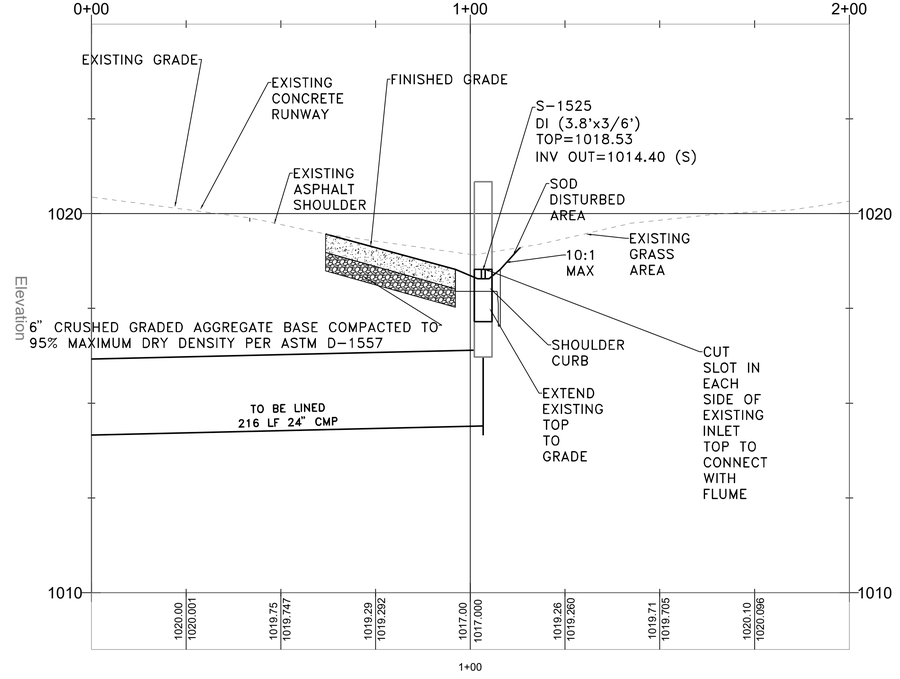

A1 NEW FLUME SECTION (SEE C1/C-403)

SCALE: 1" = 20' HOR 1" = 2' VER

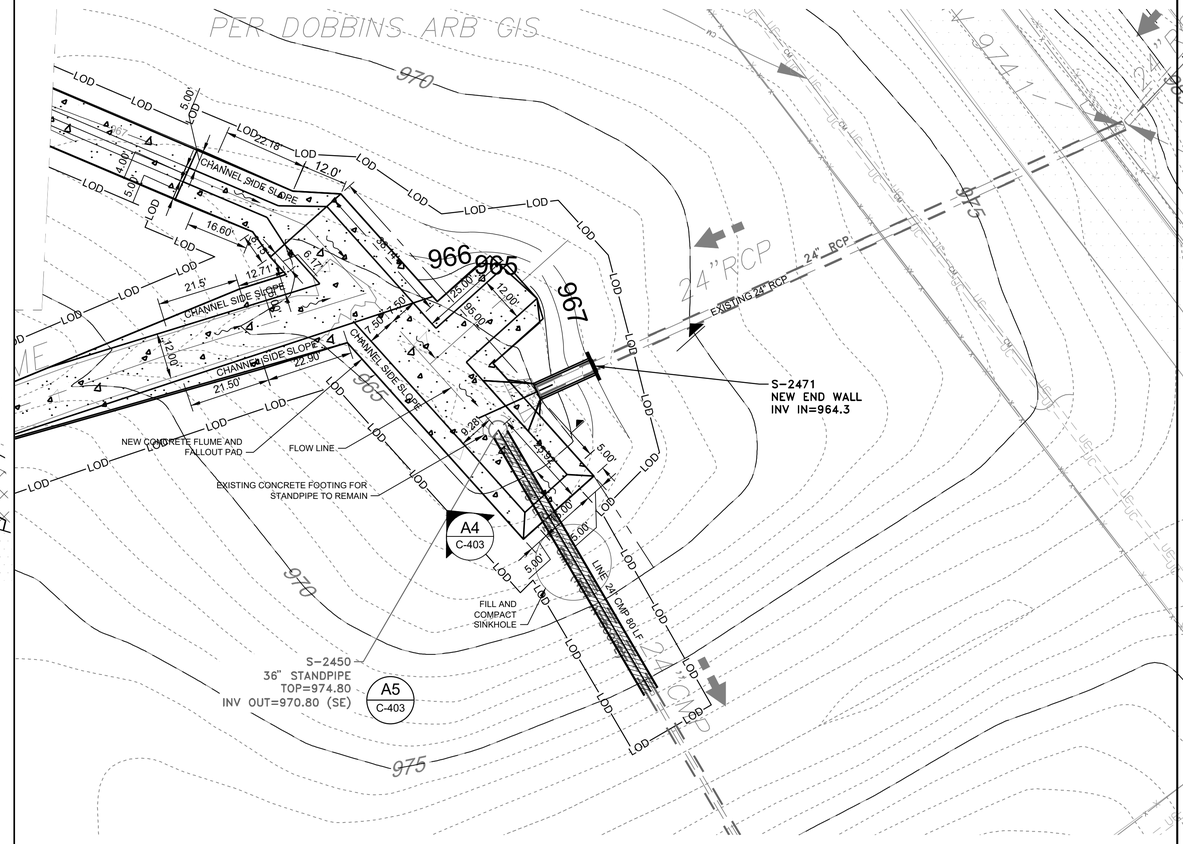

C4 ENLARGED PLAN (SEE SHEET C-121)

SCALE: 1" = 10'

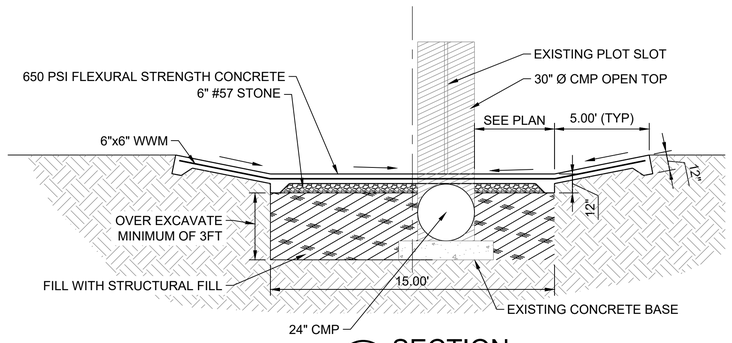

A5 SECTION

CONCRETE PAD AND original STANDPIPE DETAIL

SCALE: 1/4" = 1'

SCALE: 1/4" = 1'-0"

NORTH

US Army Corps of Engineers®
Louisville District

TANYA NORMAN, P.E.
P.E. No. 0038055, GA

GEORGIA REGISTERED No. PE038055 PROFESSIONAL ENGINEER TANYA L. NORMAN

DATE: 01/09/2026

MARK	DESCRIPTION	DATE

DESIGNED BY: T. NORMAN
DRAWN BY: J.P. ARISTIZABAL
CHECKED BY: D.M. LECKIE
SUBMITTED BY: A. DUERR
SIZE: ANSI D
ISSUE DATE: JANUARY 9, 2026
SOLICITATION NO.:
CONTRACT NO.:
FILE NUMBER: 1230218
FILE NAME: 470584-C-101(D).dwg

U.S. ARMY CORPS OF ENGINEERS
LOUISVILLE DISTRICT
LOUISVILLE, KENTUCKY 40210-0059

POND
POND
3200 CROASDAILE DRIVE, SUITE 305 DURHAM, NC 27705 PHONE (919) 490-4714
3200 CROASDAILE DRIVE, SUITE 300 DURHAM, NC 27705 PHONE (919) 490-4714
1075 BIRMINGHAM DRIVE, SUITE 2600 CUMMING, GA 30040 PHONE (678) 580-7575

REPAIR & MAINTAIN AIRFIELD STORMWATER SYSTEM
PHASE II
DOBBINS AIR RESERVE BASE, GEORGIA
PROJECT NO.: FGWB 21-0002 & FGWB 25-0006
P2#: 470584

ENLARGED STORM DRAINAGE PLAN

SHEET ID
C-403

CERTIFIED FINAL

FILE PATH: X:\FY23\1230218\04.CAD\BIM\04.02.CAD_PH 2 SHEETS\470584-C-101(D) PLOTTED: 01/09/2026 BY: NORMAN, TANYA

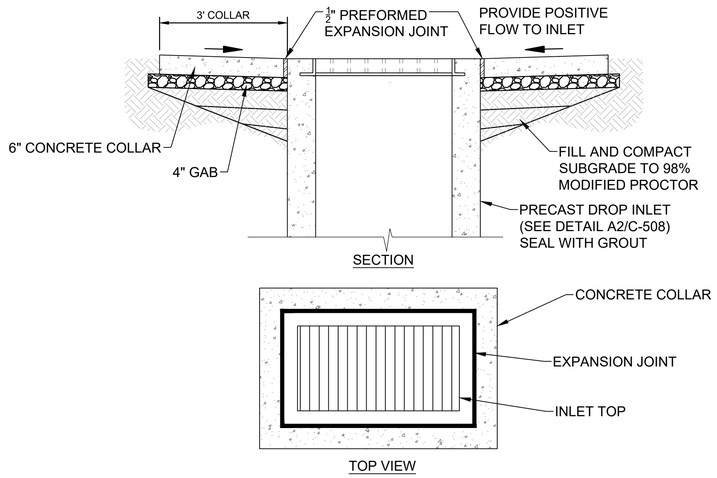

C1 INLET REVISION WITH COLLAR

SCALE: N.T.S.

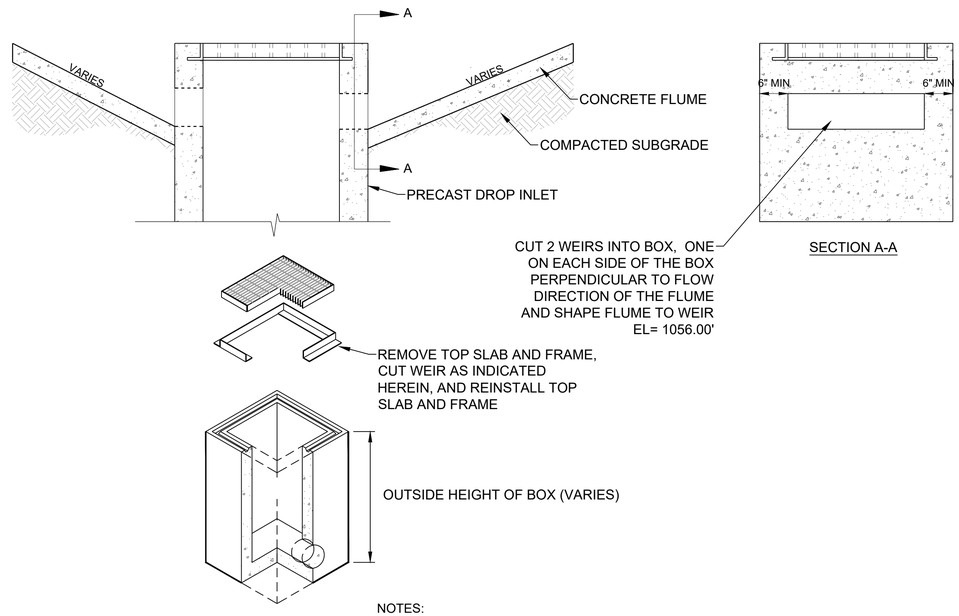

NOTES:

1. PLACEMENT AND DESIGN OF STEEL REINFORCEMENT IN RISER UNITS, RINGS, TOP SLABS AND JOINTS SHALL BE IN COMPLIANCE WITH A.S.T.M. C-478.

C3 WEIR CUT INTO INLET

SCALE: N.T.S.

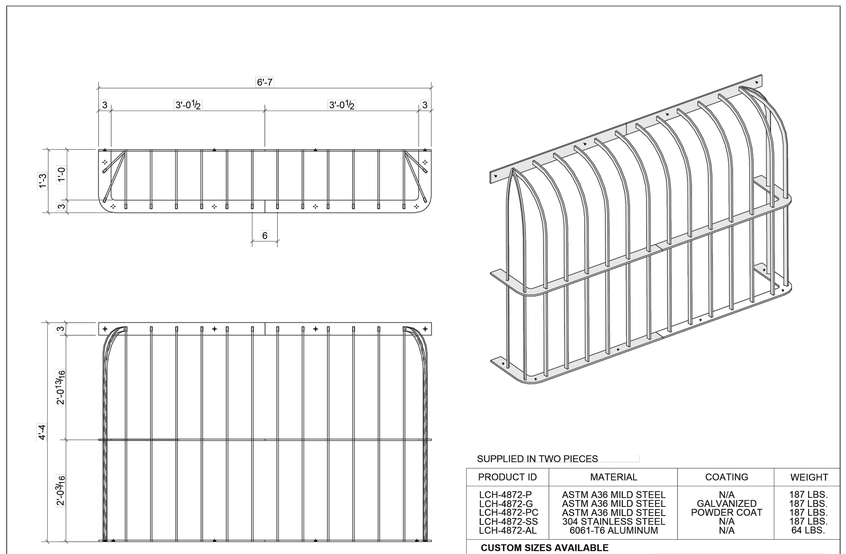

SUPPLIED IN TWO PIECES

PRODUCT ID	MATERIAL	COATING	WEIGHT
LCH-4872-P	ASTM A36 MILD STEEL	N/A	187 LBS.
LCH-4872-G	ASTM A36 MILD STEEL	GALVANIZED	187 LBS.
LCH-4872-PC	ASTM A36 MILD STEEL	POWDER COAT	187 LBS.
LCH-4872-SS	304 STAINLESS STEEL	N/A	187 LBS.
LCH-4872-AL	6061-T6 ALUMINUM	N/A	64 LBS.

CUSTOM SIZES AVAILABLE

OPTIONS: HINGED ACCESS, ANTI-VO

TRASHRACKS.COM
A DIVISION OF J.R.HOE

TITLE:
LCH-4872
48" X 72" CURVED HEADWALL GRATE

MADE IN THE U.S.A.

THE INFORMATION CONTAINED IN THIS DRAWING IS THE SOLE PROPERTY OF J.R. HOE, INC. ANY USAGE IN PART OR AS A WHOLE WITHOUT REFERENCING MANUFACTURER IS PROHIBITED. J.R. HOE RESERVES THE RIGHT TO AMEND PRODUCT DESIGN WITHOUT PRIOR NOTICE FOR PRODUCT IMPROVEMENT.

NOTES:

1. PROVIDE EACH TYPE OF PRODUCT FROM A SINGE SOURCE.
2. VERIFY DIMENSIONS OF ADJACENT CONSTRUCTION BY FIELD MEASUREMENTS BEFORE FABRICATION, AND INDICATION MEASUREMENTS ON SHOP DRAWINGS.
3. INSTALL GRATE ON DOWNSTREAM SIDE OF EACH BOX CULVERT SHOWN ON DETAIL B3/C-503.
4. STEEL PLATES, SHAPES, AND BARS MUST BE FREE OF SURFACE BLEMISHES AND COMPLY WITH ASTM A 572 GRADE 50.
5. FASTENERS AND ANCHORS MUST BE PROVIDED IN ACCORDANCE WITH MANUFACTURER'S RECOMMENDED NON-CORROSIVE TYPE.
6. FINISH MUST BE HOT-DIP GALVANIZED ITEMS AS INDICATED TO COMPLY WITH ASTM A 153/A FOR STEEL AND IRON HARDWARE AND WITH ASTM A 123/A FOR OTHER STEEL AND IRON PRODUCTS.
7. EXAMINE CONDITIONS, WITH INSTALLER PRESENT, FOR COMPLIANCE WITH REQUIREMENTS AND OTHER CONDITIONS AFFECTING PERFORMANCE OF THE WORK.
8. INSTALL GRATE IN ACCORDANCE WITH MANUFACTURER'S WRITTEN INSTRUCTIONS AND DETAILS.
9. SUBMIT PRODUCT DATA AND MANUFACTURER'S STANDARD DETAILS INDICATING TYPES, SIZES, AND FINISHES PRIOR TO INSTALLATION.
10. BASIS OF DESIGN: TRASHRACKS, PRODUCT LCH-4872 OR APPROVED EQUAL.

A1 BOX CULVERT BAR GRATE

SCALE: N.T.S.

US Army Corps of Engineers®
Louisville District

TANYA NORMAN, P.E.
P.E. No. 0038055, GA

GEORGIA REGISTERED No. PE038055 PROFESSIONAL ENGINEER TANYA L. NORMAN

DATE: 01/09/2026

MARK	DESCRIPTION	DATE

DESIGNED BY: T. NORMAN
DRAWN BY: J.P. ARISTIZABAL
CHECKED BY: D.M. LECKIE
SUBMITTED BY: A. DUEHR
SIZE: ANSI D
ISSUE DATE: JANUARY 9, 2026
SOLICITATION NO.:
CONTRACT NO.:
FILE NUMBER: 4230216
FILE NAME: C-500.dwg

U.S. ARMY CORPS OF ENGINEERS
LOUISVILLE DISTRICT
LOUISVILLE, KENTUCKY 40210-0059

POND
3600 GLENWAY LANE, SUITE 500
PROVIDENCE, KENTUCKY, GA 30092
PHONE (859) 539-6741
PHONE (859) 539-6742

REPAIR & MAINTAIN AIRFIELD STORMWATER SYSTEM
PHASE II
DOBBINS AIR RESERVE BASE, GEORGIA
PROJECT NO.: FGWB 21-0002 & FGWB 25-0006
P2#: 470584

CONSTRUCTION DETAILS

SHEET ID
C-501

FILE PATH: X:\FY23\123021\60\4.02.CAD_PH 2 SHEETS\CAD\C-500 PLOTTED: 01/09/2026 BY: NORMAN, TANYA

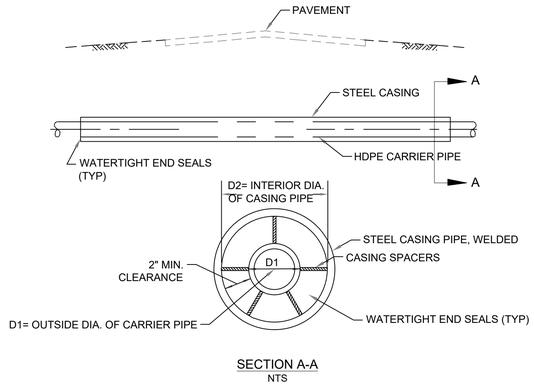

SECTION A-A
NTS

C1 JACK AND BORE
SCALE: N.T.S.

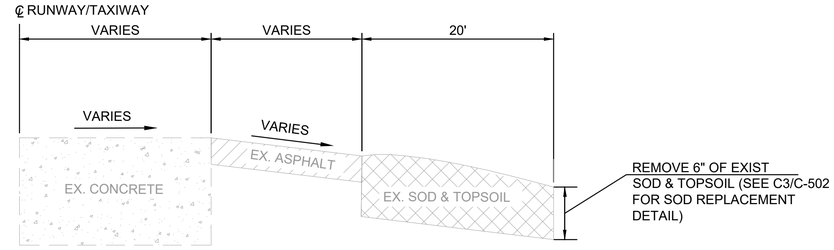

NOTE: REMOVE TOPSOIL IN ACCORDANCE WITH SPECIFICATION 31 00 00.00 06 EARTHWORK.

D4 RUNWAY/TAXIWAY EXIST GROUND DEMOLITION TYPICAL SECTION
NO SCALE

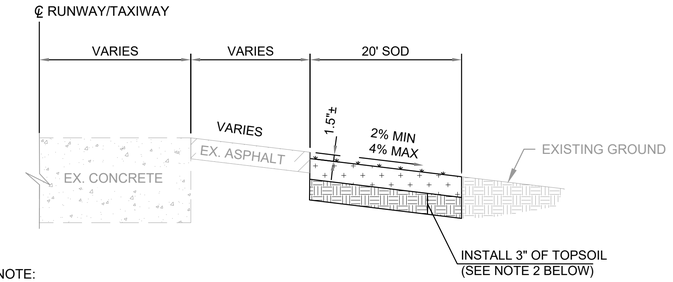

NOTE:
1. SOD PLACEMENT TO FOLLOW IN ACCORDANCE WITH SPECIFICATION 32 92 23 SODDING.
2. TOPSOIL PLACEMENT TO FOLLOW IN ACCORDANCE WITH SPECIFICATION 31 00 00.00 06 EARTHWORK.

C3 RUNWAY/TAXIWAY PROPOSED SOD PLACEMENT
NO SCALE

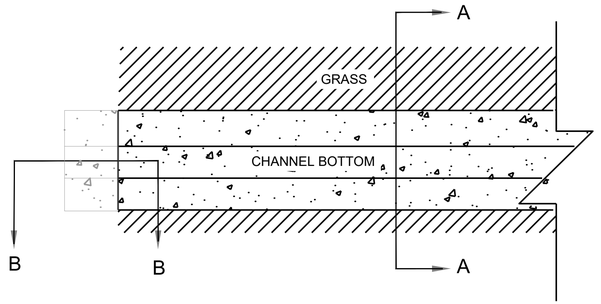

PLAN VIEW

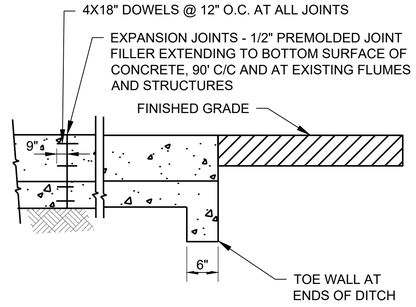

SECTION B-B

NOTE: SEE DETAIL A4/C-508 FOR ADDITIONAL INFORMATION FOR CONNECTIONS TO EXISTING FLUMES.

NOTE:

1. CONTROL DUST IN ACCORDANCE WITH LOCAL, STATE AND FEDERAL POLLUTION CONTROL REGULATIONS.
2. EXTEND TAXIWAY CENTERLINES THROUGH TO EDGE OF PAVED AREA.
3. PRESSURE WASH TO CLEAN PROPOSED HOLD POSITION MARKING AREAS AS SHOWN.
4. TESTING OF THE PAINT PER SECTION 32 17 23.19, EXECUTE THE TESTING REQUIREMENT PER SECTION 32 17 23.19 AND SUBMIT TEST RESULTS TO OWNER.

A1 HOLDING POSITION MARKING REPLACEMENT DETAIL
NO SCALE

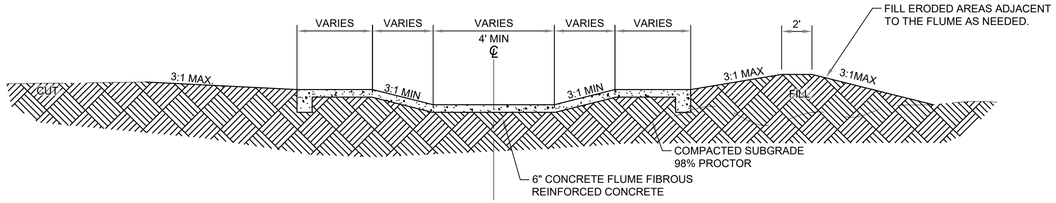

SECTION A-A
N.T.S.

A3 NEW CONCRETE FLUME
SCALE: N.T.S.

US Army Corps of Engineers®
Louisville District

TANYA NORMAN, P.E.
P.E. No. 0038055, GA
GEORGIA REGISTERED No. PE038055 PROFESSIONAL ENGINEER TANYA L. NORMAN
DATE: 01/09/2026

MARK	DESCRIPTION	DATE

ISSUE DATE: JANUARY 9, 2026
SOLICITATION NO.:
CONTRACT NO.:
FILE NUMBER: 423026

DESIGNED BY: T. NORMAN
DRAWN BY: J.P. ARISTIZABAL
CHECKED BY: D.M. LECKIE
SUBMITTED BY: A. DUEHR
SIZE: ANSI D
FILE NAME: C-500.dwg

U.S. ARMY CORPS OF ENGINEERS
LOUISVILLE DISTRICT
LOUISVILLE, KENTUCKY 40210-0059

POND
POND
3025 TOWNSGATE ROAD, SUITE 300 WESTLAKE VILLAGE, CA 91361
PHONE (818) 597-1311 FAX (818) 597-1313

REPAIR & MAINTAIN AIRFIELD STORMWATER SYSTEM PHASE II
DOBBINS AIR RESERVE BASE, GEORGIA
PROJECT NO.: FGWB 21-0002 & FGWB 25-0006
P2#: 470584

CONSTRUCTION DETAILS

SHEET ID
C-502

FILE PATH: X:\PY23\123026\04.CAD BIM\04.02.CAD_PH 2 SHEETS\CAD\C-500 PLOTTED: 01/09/2026 BY: NORMAN, TANYA

CERTIFIED FINAL

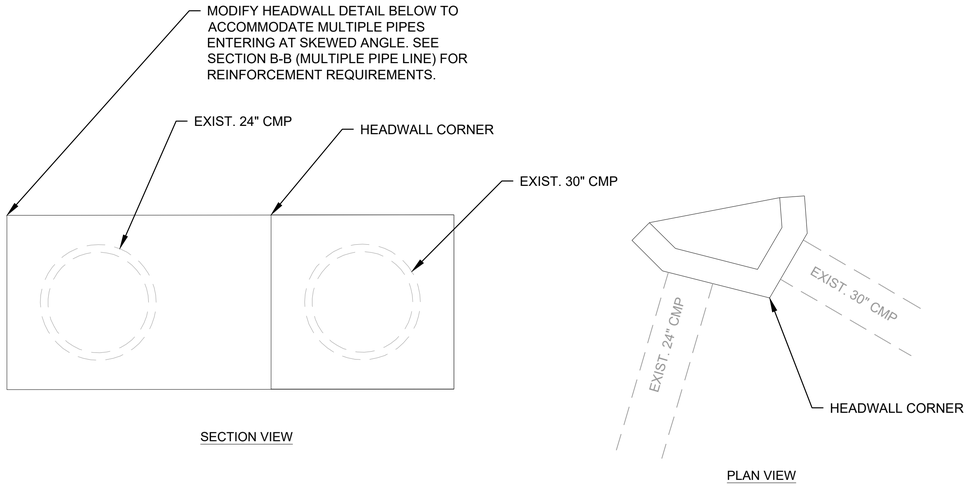

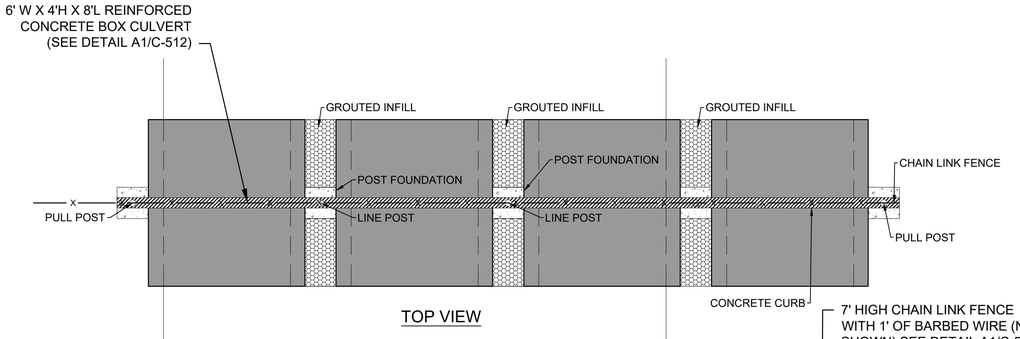

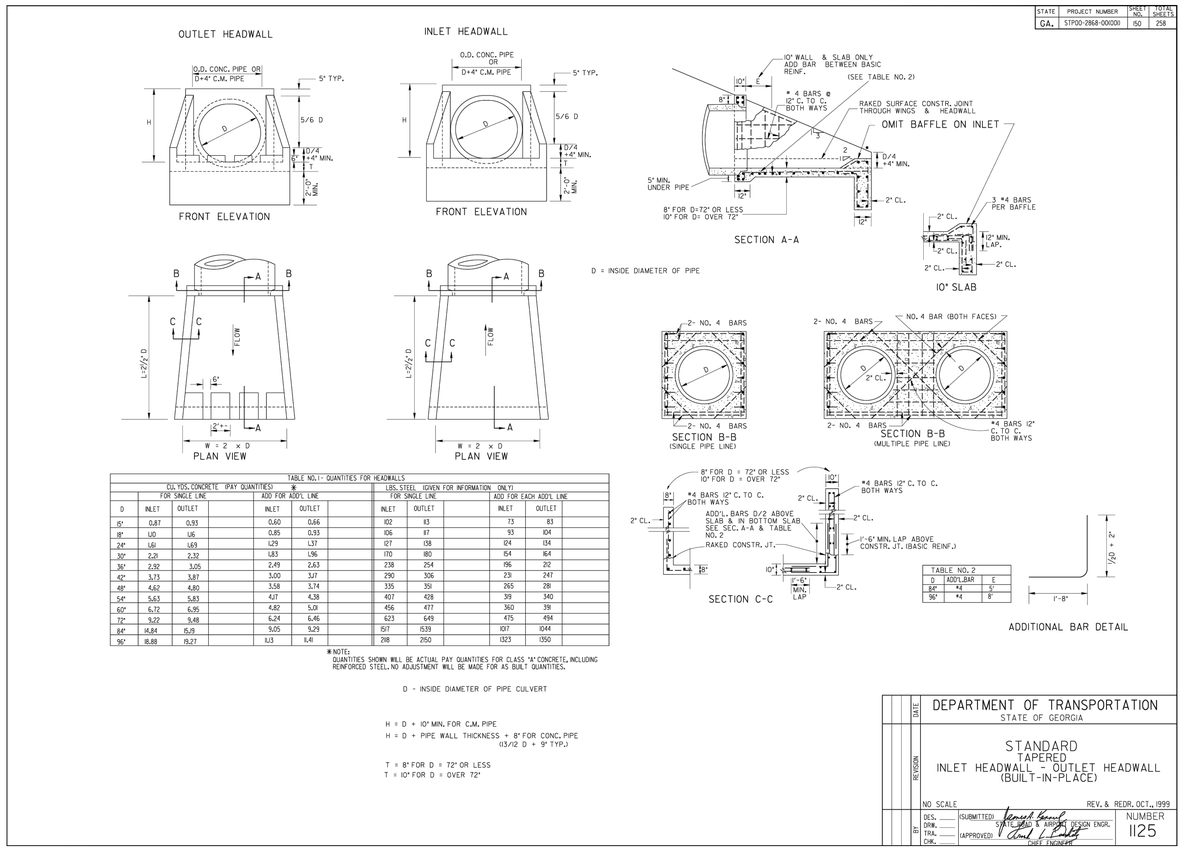

STATE	PROJECT NUMBER	SHEET NO.	TOTAL SHEETS
GA.	STP00-2868-00(000)	150	258

TABLE NO.1 - QUANTITIES FOR HEADWALLS

	CU. YDS. CONCRETE (PAY QUANTITIES) *				LBS. STEEL (GIVEN FOR INFORMATION ONLY)			
	FOR SINGLE LINE		ADD FOR ADD'L LINE		FOR SINGLE LINE		ADD FOR EACH ADD'L LINE	
D	INLET	OUTLET	INLET	OUTLET	INLET	OUTLET	INLET	OUTLET
15"	0.87	0.93	0.60	0.66	102	113	73	83
18"	1.00	1.06	0.85	0.93	106	117	93	104
24"	1.61	1.69	1.29	1.37	127	138	124	134
30"	2.21	2.32	1.83	1.96	170	180	154	164
36"	2.92	3.05	2.49	2.63	238	254	196	212
42"	3.73	3.87	3.00	3.17	290	306	231	247
48"	4.62	4.80	3.58	3.74	335	351	265	281
54"	5.63	5.83	4.17	4.38	407	428	319	340
60"	6.72	6.95	4.82	5.01	456	477	360	381
72"	9.22	9.48	6.24	6.46	623	649	475	494
84"	11.84	12.13	9.05	9.29	767	1039	1017	1044
96"	18.88	19.27	8.13	11.41	2118	2150	1323	1350

* NOTE: QUANTITIES SHOWN WILL BE ACTUAL PAY QUANTITIES FOR CLASS "A" CONCRETE, INCLUDING REINFORCED STEEL. NO ADJUSTMENT WILL BE MADE FOR AS BUILT QUANTITIES.

TABLE NO. 2		
D	ADD'L BAR	E
84"	#4	5"
96"	#4	8"

DEPARTMENT OF TRANSPORTATION
STATE OF GEORGIA

STANDARD
TAPERED
INLET HEADWALL - OUTLET HEADWALL
(BUILT-IN-PLACE)

NO SCALE — REV. & REDR. OCT., 1999

DES. ____ DRW. ____ TRA. ____ CHK. ____ BY: (SUBMITTED) (APPROVED) STATE ROAD & AIRPORT DESIGN ENGR. CHIEF ENGINEER

REVISION — DATE

NUMBER 1125

A1 ENERGY DISSIPATOR HEADWALL
SCALE: N.T.S.

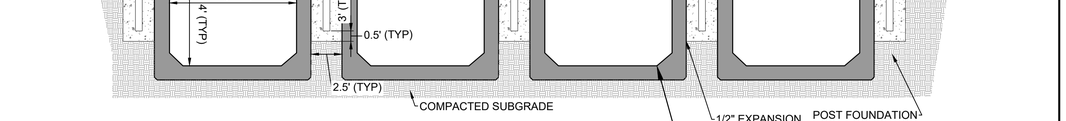

NOTES:
1. EXCAVATE SUBGRADE AS NEEDED TO PROVIDE A UNIFORM FOUNDATION FREE OF PROTRUDING ROCKS.
2. INSTALL HINGED BOX CULVERT BAR SCREEN ON DOWNSTREAM SIDE OF EACH CULVERT. INSTALL IN ACCORDANCE WITH MANUFACTURER'ERS RECOMMENDATIONS. SEE DETAIL A1 ON SHEET C-501.

B3 REINFORCED CONCRETE BOX CULVERT WATER CROSSING
SCALE: N.T.S.

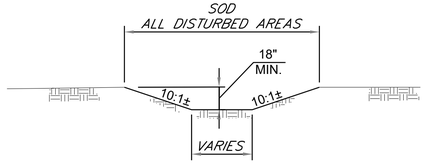

NOTE:

1. CONTRACTOR TO MATCH EXISTING SWALE BOTTOM DIMENSION.

A4 SOD SWALE TYPICAL
SCALE: N.T.S.

US Army Corps of Engineers®
Louisville District

TANYA NORMAN, P.E.
P.E. No. 0038055, GA
GEORGIA REGISTERED No. PE038055 PROFESSIONAL ENGINEER TANYA L. NORMAN
DATE: 01/09/2026

MARK	DESCRIPTION	DATE

DESIGNED BY: T. NORMAN
DRAWN BY: J.P. ARISTIZABAL
CHECKED BY: D.M. LECKIE
SUBMITTED BY: A. DUERR
SIZE: ANSI D
ISSUE DATE: JANUARY 9, 2026
SOLICITATION NO.:
CONTRACT NO.:
FILE NUMBER: 1230216
FILE NAME: C-500.dwg

U.S. ARMY CORPS OF ENGINEERS
LOUISVILLE DISTRICT
LOUISVILLE, KENTUCKY 40210-0059

POND
POND
POND & COMPANY
300 SOUTH WAVERLY LANE
SUITE 200 KENNESAW, GA 30092
PHONE (678) 336-2104
PHONE (615) 324-7370
PHONE (859) 514-7200

REPAIR & MAINTAIN AIRFIELD STORMWATER SYSTEM
PHASE II
DOBBINS AIR RESERVE BASE, GEORGIA
PROJECT NO.: FGWB 21-0002 & FGWB 25-0006
P2#: 470584

CONSTRUCTION DETAILS

SHEET ID
C-503

CERTIFIED FINAL

FILE PATH: X:\FY23\123021804\.CAD BIM\04.02.CAD_PH 2 SHEETS\CAD\C-500 PLOTTED: 01/09/2026 BY: NORMAN, TANYA

D	d (min.)
< 27"	3"
30" to 60"	4"
> 66"	5"

LEGEND
B_C= OUTSIDE DIAMETER
D = INSIDE DIAMETER
d = DEPTH OF BEDDING MATERIAL BELOW PIPE

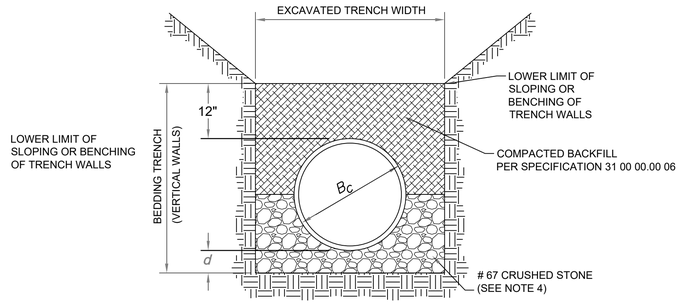

NOTES:
1. FOR CLASS B PIPE BEDDING, SUBGRADE MUST BE EXCAVATED (OR OVER EXCAVATED, IF NECESSARY) SO A UNIFORM FOUNDATION FREE OF PROTRUDING ROCKS MAY BE PROVIDED.
2. GRANULAR BEDDING SHALL BE HAND TAMPED IN 6" LIFTS AND SHALL CONFORM TO ASTM C-22 OR ASTM D-488 GRADATION SIZE # 67.
3. TYPICAL ALL BEDDING.
4. FOR PLASTIC PIPE AND CMP INSTALLATIONS, INSTALL PIPE BEDDING TO THE CROWN OF THE PIPE.

C1 CLASS B PIPE BEDDING
SCALE: N.T.S.

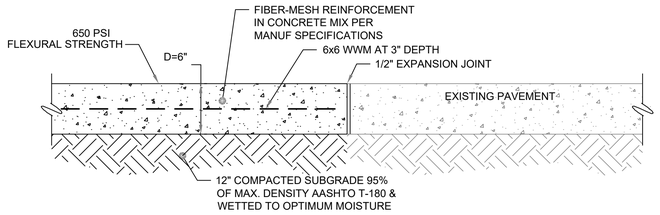

UNDOWELED CONTRACTION (CONTROL) JOINT

NOTES:

1. CRACK CONTROL (CONTRACTION) JOINTS @ 15' O.C. UNLESS OTHERWISE NOTED.
2. EXPANSION JOINTS TO BE 1/2" WITH PRE-MOLDED JOINT FILLER MATERIAL.
3. CONSTRUCT CONTRACTION JOINTS INTO PANELS THAT ARE APPROX. SQUARE. WHEN THIS IS NOT POSSIBLE, RECTANGULAR PANELS CAN BE USED IF THE LONG DIMENSION IS NO MORE THAN 1.25 TIMES THE SHORT DIMENSION.

C3 CONCRETE PAVEMENT
SCALE: N.T.S.

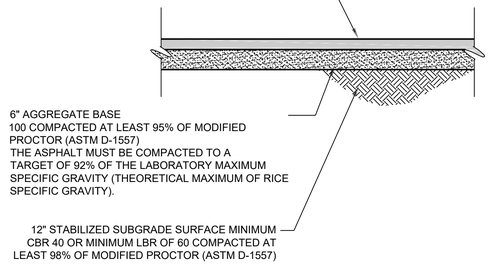

NOTES :

1. A TACK COAT WILL BE REQUIRED FOR ASPHALT PAVEMENT BETWEEN EXISTING PAVEMENT SURFACES, LAYERS OF LIFT OF ASPHALT, OR ASPHALT PLACED AGAINST CURBS, GUTTERS AND CONSTRUCTION JOINTS.
2. BEFORE PLACING THE BASE COURSE THE EXPOSED SUBGRADE SHALL BE COMPACTED TO A DENSITY OF 98% MODIFIED PROCTOR (ASTM D1557) FOR A DEPTH OF 12"
3. SOME STABILIZATION OF THE EXISTING SUB-GRADE SHOULD BE ANTICIPATED BEFORE COMPACTION OF THE BASE MATERIAL. STABILIZATION THE EXISTING SUB-GRADE BY MIXING IN ROUGHLY 4 INCHES OF BASE MATERIAL INTO THE TOP 12 INCHES OF EXISTING SUB-GRADE MATERIAL PRIOR TO COMPACTION. IMPORTED PAVEMENT SUB-GRADE MATERIAL SHOULD HAVE A MINIMUM CBR VALUE OF 32 TO AVOID STABLIZATION REQUIREMENTS.

A1 TYPICAL ASPHALT PAVEMENT REPAIR
SCALE: N.T.S.

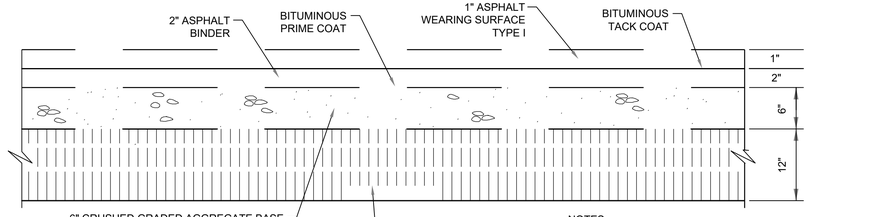

NOTES:
12" COMPACTED SUBGRADE (IN CUT)
24" COMPACTED SUBGRADE (IN FILL)
COMPACT TO 98% MAXIMUM DRY DENSITY PER ASTM D-1557

A3 REPAIR AS-NEEDED ASPHALT PAVEMENT SECTION - TAXIWAY SHOULDER
SCALE: N.T.S.

US Army Corps of Engineers®
Louisville District

TANYA NORMAN, P.E.
P.E. No. 0038055, GA
GEORGIA REGISTERED No. PE038055 PROFESSIONAL ENGINEER TANYA L. NORMAN
DATE: 01/09/2026

MARK	DESCRIPTION	DATE

DESIGNED BY: T. NORMAN
DRAWN BY: J.P. ARISTIZABAL
CHECKED BY: D.M. LECKIE
SUBMITTED BY: A. DUEHR
SIZE: ANSI D
ISSUE DATE: JANUARY 9, 2026
SOLICITATION NO.:
CONTRACT NO.:
FILE NUMBER: 423026
FILE NAME: C-500.dwg

U.S. ARMY CORPS OF ENGINEERS
LOUISVILLE DISTRICT
LOUISVILLE, KENTUCKY 40210-0059

POND
3055 PEACHTREE INDUSTRIAL BLVD
SUITE 300
DULUTH, GEORGIA GA 30097
PHONE (678) 336-2749
PHONE (678) 336-2745
POND PROJECT NO. 170276

REPAIR & MAINTAIN AIRFIELD STORMWATER SYSTEM
PHASE II
DOBBINS AIR RESERVE BASE, GEORGIA
PROJECT NO.: FGWB 21-0002 & FGWB 25-0006
P2#: 470584

CONSTRUCTION DETAILS

SHEET ID
C-504

CERTIFIED FINAL

FILE PATH: X:\FY23\123026\04.CAD BIM\04.02.CAD_PH 2 SHEETS\CAD\C-500 PLOTTED: 01/09/2026 BY: NORMAN, TANYA

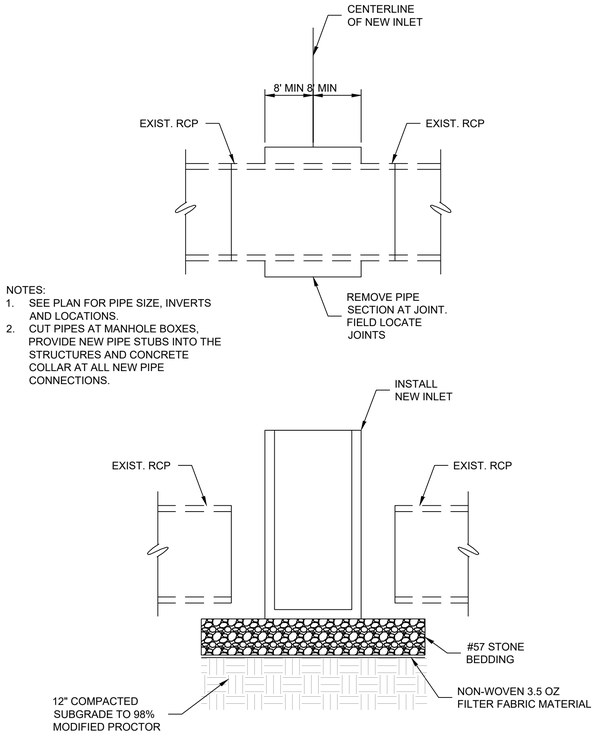

NOTES:
1. SEE PLAN FOR PIPE SIZE, INVERTS AND LOCATIONS.
2. CUT PIPES AT MANHOLE BOXES, PROVIDE NEW PIPE STUBS INTO THE STRUCTURES AND CONCRETE COLLAR AT ALL NEW PIPE CONNECTIONS.

A1 INSTALLATION OF NEW INLET AT EX. PIPE

SCALE: N.T.S.

(AT ALL NEW STRUCTURES ADDED IN EXISTING CULVERT SECTIONS)

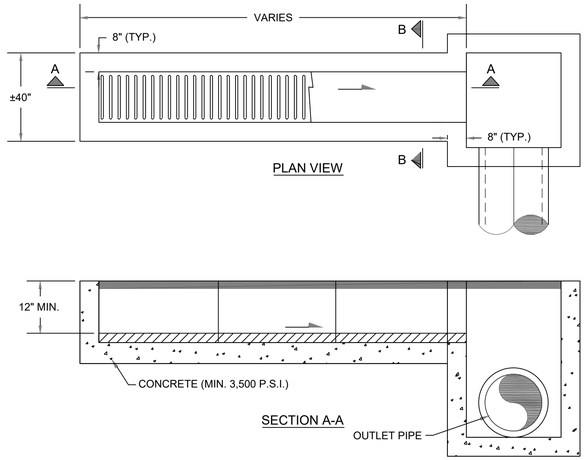

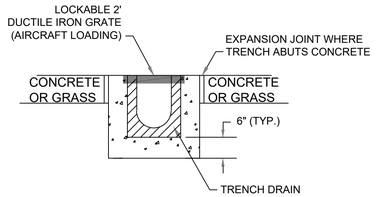

SECTION B-B

NOTES:
1. SUBGRADE SHALL BE COMPACTED TO 95% MOD. PROCTOR DENSITY (AASHTO T-180)
2. CONNECT TRENCH DRAIN TO OUTFALL PIPE IN ACCORDANCE WITH:
   - ALTERNATIVE-A: FOR A TERMINAL CONNECTION USE ONE (1) 90° ELBOW
   - ALTERNATIVE-B: FOR AN IN-LINE CONNECTION USE ONE (1) 45° ELBOW AND ONE (1) WYE.

C4 TRENCH DRAIN

SCALE: N.T.S.

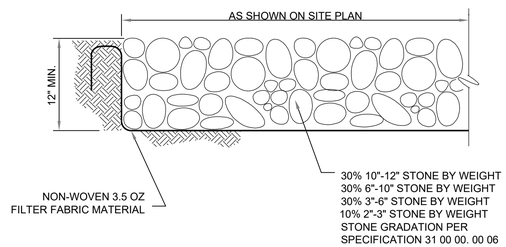

NOTE:

1. CONCRETE RUBBLE SHALL BE FREE OF REBAR, WIRE, AND OTHER MATERIAL THAT MAY PUNCTURE THE FILTER FABRIC MATERIAL. ANY PUNCTURED GEOTEXTILE SHALL BE REPLACED IMMEDIATELY AT THE CONTRACTOR'S EXPENSE

A4 RIPRAP TYPICAL

SCALE: N.T.S.

US Army Corps of Engineers®
Louisville District

TANYA NORMAN, P.E.
P.E. No. 0038055, GA

GEORGIA REGISTERED No. PE038055 PROFESSIONAL ENGINEER TANYA L. NORMAN

DATE: 01/09/2026

MARK	DESCRIPTION	DATE

ISSUE DATE: JANUARY 9, 2026
SOLICITATION NO.:
CONTRACT NO.:
FILE NUMBER: 423026

DESIGNED BY: T. NORMAN
DRAWN BY: J.P. ARISTIZABAL
CHECKED BY: D.M. LECKIE
SUBMITTED BY: A. DUEHR
SIZE: ANSI D
FILE NAME: C-500.dwg

U.S. ARMY CORPS OF ENGINEERS
LOUISVILLE DISTRICT
LOUISVILLE, KENTUCKY 40210-0059

POND
3330 RAMADA DRIVE, SUITE 300
PAINESVILLE, OHIO 44077
PHONE (877) 350-7663
POND & COMPANY, GA CERT. NO. CERT-0002
POND

REPAIR & MAINTAIN AIRFIELD STORMWATER SYSTEM
PHASE II
DOBBINS AIR RESERVE BASE, GEORGIA
PROJECT NO.: FGWB 21-0002 & FGWB 25-0006
P2#: 470584

CONSTRUCTION DETAILS

SHEET ID
C-505

CERTIFIED FINAL

FILE PATH: X:\FY23\123021604.CAD BIM\04.02.CAD_PH 2 SHEETS\CAD\C-500 PLOTTED: 01/09/2026 BY: NORMAN, TANYA

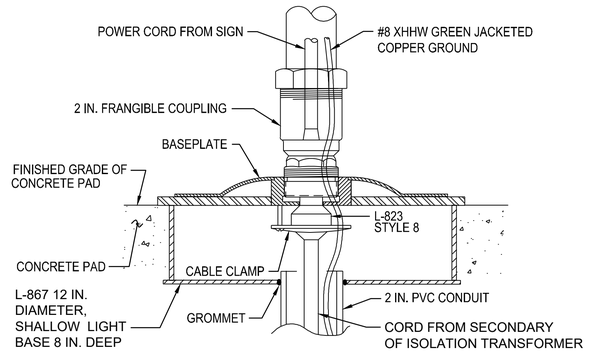

C5 DETAIL
NO SCALE

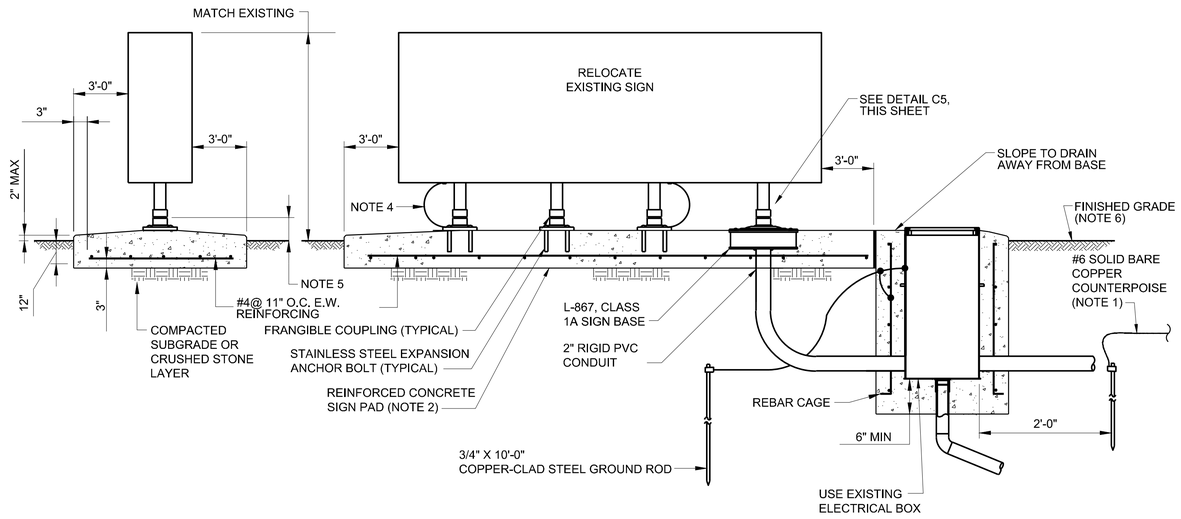

A3 SIGN BASE DETAILS
NO SCALE

NOTES:

1. DO NOT CONNECT COUNTERPOISE TO THE TRANSFORMER BASE. CONNECT TRANSFORMER BASE AND COUNTERPOISE TO SEPARATE GROUND RODS.
2. SIGN PAD MUST HAVE A 1/2" CHAMFER ON ALL EXPOSED HORIZONTAL EDGES. EXTEND PAD 36" CLEAR ON ALL SIDES OF SIGN. SLOPE THE TOP SURFACE TO DRAIN AWAY FROM SIGN, APPROXIMATELY 1% (1/8"/FT). THE TOP OF THE PAD MUST BE APPROXIMATELY 1" ABOVE THE SURROUNDING GRADE.
3. REUSE EXISTING SIGN.
4. ONE TETHER AT EACH END OF THE SIGN IF SEPARATE SIGN MODULES ARE CONNECTED TOGETHER WITHIN A CONTINUOUS FRAME.
5. THE FRANGIBILITY POINT MUST BE NO GREATER THAN 3" ABOVE THE GRADE ADJACENT TO THE PAD.
6. SURROUNDING GRADE MUST SLOPE 1/4" PER FOOT AWAY FROM THE PAD FOR AT LEAST 15'-0" . SOD OR SEED AS REQUIRED.

US Army Corps of Engineers®
Louisville District

TANYA NORMAN, P.E.
P.E. No. 0038055, GA

GEORGIA REGISTERED No. PE038055 PROFESSIONAL ENGINEER TANYA L. NORMAN

DATE: 01/09/2026

MARK	DESCRIPTION	DATE

ISSUE DATE: JANUARY 9, 2026
SOLICITATION NO.:
CONTRACT NO.:
FILE NUMBER: 1230218
DESIGNED BY: T. NORMAN
DRAWN BY: J.P. ARISTIZABAL
CHECKED BY: D.M. LECKIE
SUBMITTED BY: A. DUEHR
SIZE: ANSI D
FILE NAME: C-500.dwg

U.S. ARMY CORPS OF ENGINEERS
LOUISVILLE DISTRICT
LOUISVILLE, KENTUCKY 40210-0059

POND
3500 PARKWAY LANE
SUITE 500
PEACHTREE CORNERS, GA 30092
PHONE (678) 336-7750
POND JOB No. 1230218

REPAIR & MAINTAIN AIRFIELD STORMWATER SYSTEM
PHASE II
DOBBINS AIR RESERVE BASE, GEORGIA
PROJECT NO.: FGWB 21-0002 & FGWB 25-0006
P2#: 470584

CONSTRUCTION DETAILS

SHEET ID
C-506

CERTIFIED FINAL

FILE PATH: X:\FY23\1230218\04.CAD BIM\04.02.CAD_PH 2 SHEETS\CAD\C-500 PLOTTED: 01/09/2026 BY: NORMAN, TANYA

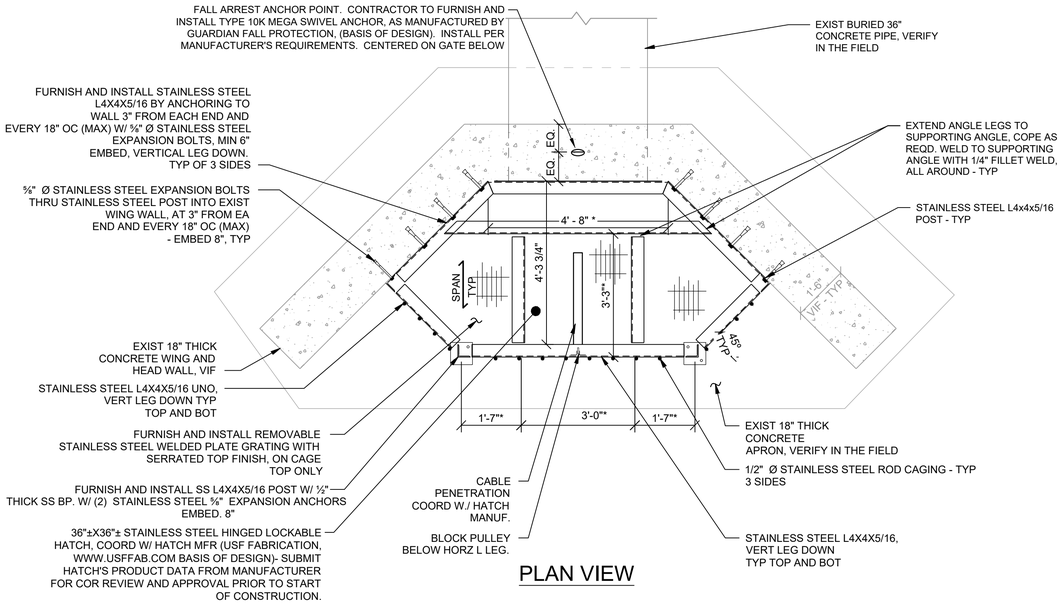

PLAN VIEW

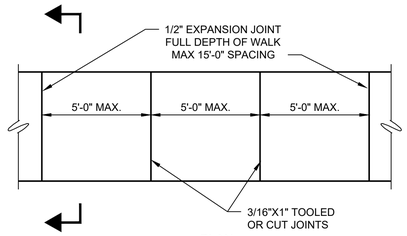

PLAN

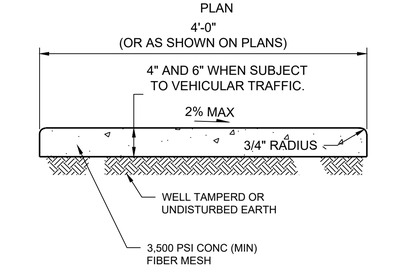

SECTION

C3 CONCRETE WALK
NO SCALE

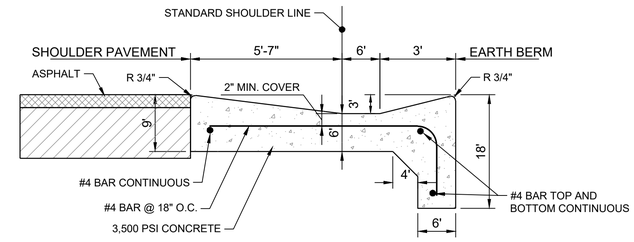

C4 SHOULDER GUTTER
NO SCALE

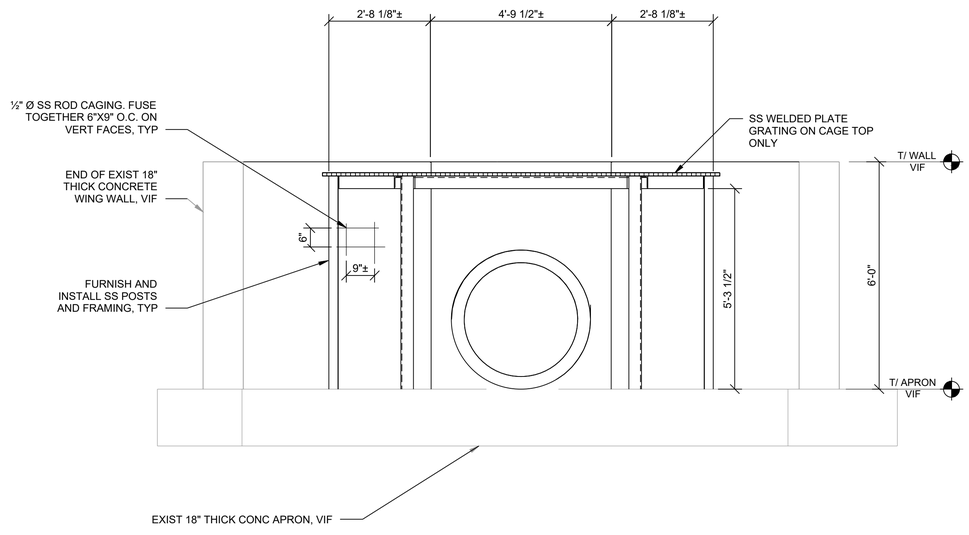

FRONT VIEW

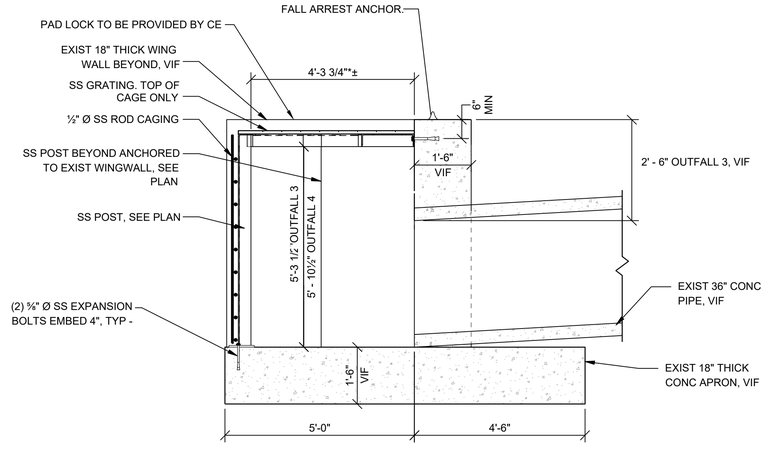

NOTE: SS = STAINLESS STEEL

SIDE VIEW

A1 HEADWALL WITH SECURITY GRATE
0 1' 2' 4' 6'
SCALE: 1/2" = 1'-0"

US Army Corps of Engineers®
Louisville District

TANYA NORMAN, P.E.
P.E. No. 0038055, GA
GEORGIA REGISTERED No. PE0038055 PROFESSIONAL ENGINEER TANYA L. NORMAN
DATE: 01/09/2026

MARK	DESCRIPTION	DATE

DESIGNED BY: T. NORMAN
DRAWN BY: J.P. ARISTIZABAL
CHECKED BY: D.M. LECKIE
SUBMITTED BY: A. DUEHR
SIZE: ANSI D
ISSUE DATE: JANUARY 9, 2026
SOLICITATION NO.:
CONTRACT NO.:
FILE NUMBER: 1223016
FILE NAME: C-500.dwg

U.S. ARMY CORPS OF ENGINEERS
LOUISVILLE DISTRICT
LOUISVILLE, KENTUCKY 40210-0059

POND
3200 BROADWAY LANE, SUITE 500
BUFORD, GEORGIA 30519
PHONE (678) 336-2743
POND PROJECT NO. 170259

REPAIR & MAINTAIN AIRFIELD STORMWATER SYSTEM
PHASE II
DOBBINS AIR RESERVE BASE, GEORGIA
PROJECT NO.: FGWB 21-0002 & FGWB 25-0006
P2#: 470584

CONSTRUCTION DETAILS

SHEET ID
C-507

FILE PATH: X:\FY23\123021\60\4.02.CAD_BIM\04.02.CAD_PH 2 SHEETS\CAD\C-500 PLOTTED: 01/09/2026 BY: NORMAN, TANYA

CERTIFIED FINAL

TYPE "C"

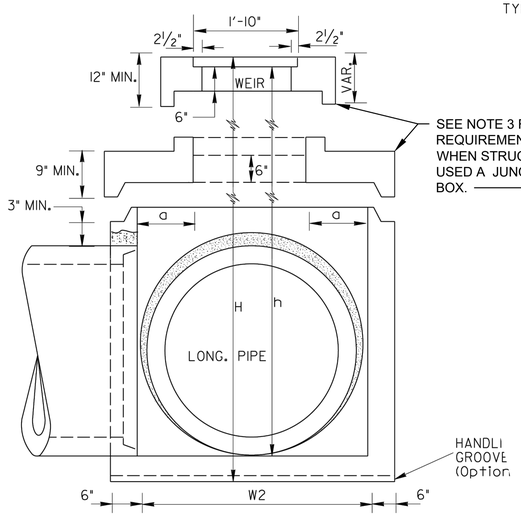

TYPE "C" OR "E" FOR PIPES LARGER THAN 18"(WITH OR WITHOUT WEIR)

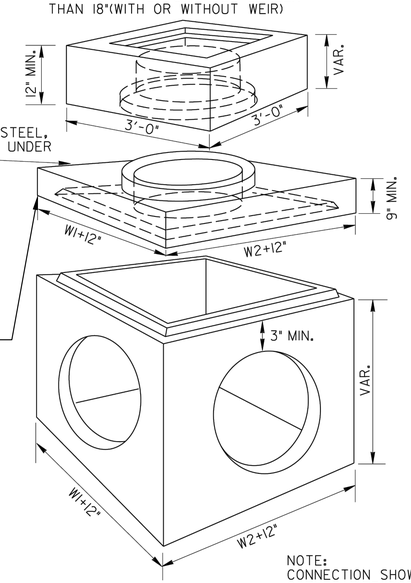

NOTE:
CONNECTION SHOWN ABOVE FOR USE WHERE CONCRETE OUTLET PIPE DOES NOT HAVE BELL OR HUB END PROVIDED AT STRUCTURE OUTLET.

CONNECTING PIP

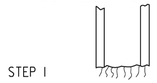

STEP 1

CUT CONCRETE PIPE LEAVING APPROXIMATELY 3" OF REINFORCING MESH EXPOSED.

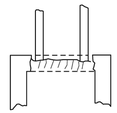

STEP 2

POSITION PIPE APPROXIMATELY 3" INTO OPENING OF WALL.

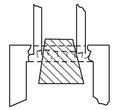

STEP 3

POSITION CONICAL CORE INSIDE OF PIPE AND SEAL WITH GROUT (1/2" MIN. THICKNESS OF GROUT). REMOVE CORE WHEN SET AND RUB GROUT TO SEAL JOINTS.

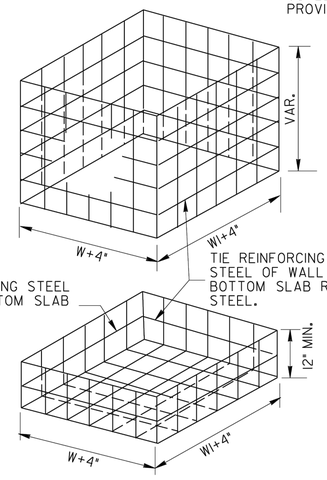

ALTERNATE METHOD OF CONNECTION SKEWED PIPE

PLAN

ALTERNATE METHODS OF CONNECTING SKEWED PIPES MAY INCLUDE PIPE ELBOWS OR CIRCULAR PRECAST BASE UNITS. SEE SEPARATE STANDARDS.

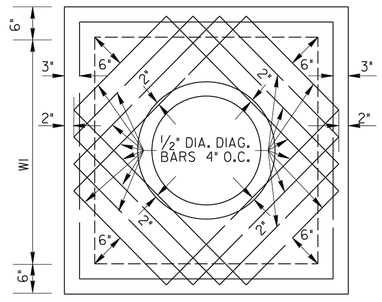

SCALE: ¾" =1

FOR OTHER DETAILS, SEE TYPE "B"

NOTE: REINFORCING STEEL SHALL BE No. 4 STEEL BARS AT 12" O.C. BOTH WAYS OR EQUIVALENT WIRE FABRIC REINFORCING.

SPECIAL NOTE:
STANDARD 1019A INLETS ARE FOR USE AT LOW POINTS AND WHERE HYDRAULIC LOW CAPACITY GRATES ARE SUFFICIENT. WHERE HIGHER CAPACITY GRATES ARE NEEDED ON A CONTINUOUS GRADE, STANDARD 1019B IS RECOMMENDED.

DIMENSIONS FOR DROP INLETS

PIPE SIZE	TYPE C Wior W2	a	MIN. h	MIN. H
15"	2'- 0"		2'-7"	3'-3½"
18"	2'- 0"		2'-10"	3'-6½"
24"	3'- 0"	0'- 6"	4'- 3½"	5'- 0"
30"	3'- 6"	0'- 9"	4'-10½"	5'- 7"
36"	4'- 0"	1'- 0"	5'- 5½"	6'- 2"
42"	4'- 6"	1'- 3"	6'-1½"	6'- 8"
48"	5'- 0"	1'- 6"	6'- 7½"	7'- 3"
54"	5'- 6"	1'- 9"	7'- 2½"	7'-10"
60"	6'- 0"	2'- 0"	7'- 9½"	8'- 5"

NOTE:
1. STRUCTURES WITHIN 250 FT OF RUNWAY CENTERLINE AND 50 FT OF EDGE OF PAVEMENT OF TAXIWAY PRECAST STRUCTURES ARE TO BE DESIGNED FOR A MINIMUM AIRCRAFT WHEEL LOAD OF 84,000 LB AND TIRE PRESSURE OF 95 PSI AND MEET THE MINIMUM REQUIREMENTS OF ASTM C478.
2. STRUCTURES WITHIN 250 FT OF RUNWAY CENTERLINE AND 50 FT OF EDGE OF PAVEMENT OF TAXIWAY DRAIN CASTINGS SHALL BE CAST IRON AND BE AIRPORT RATED AND MEET THE MINIMUM AIRCRAFT WHEEL LOAD OF 840,000 LB AND TIRE PRESSURE OF 95 PSI.
3. INSTALL FLAT TOP SLAB WITH SOLID TOP WHEN STRUCTURE IS USED AS A JUNCTION BOX.

A2 PRECAST DROP INLET (DI)
NO SCALE (GDOT)

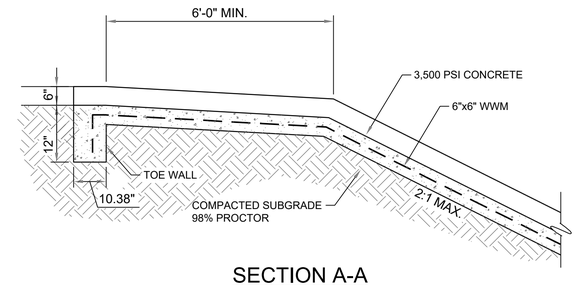

SECTION A-A

N.T.S.

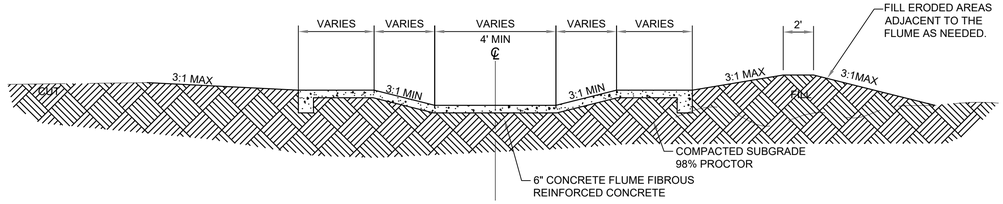

SECTION B-B

N.T.S.

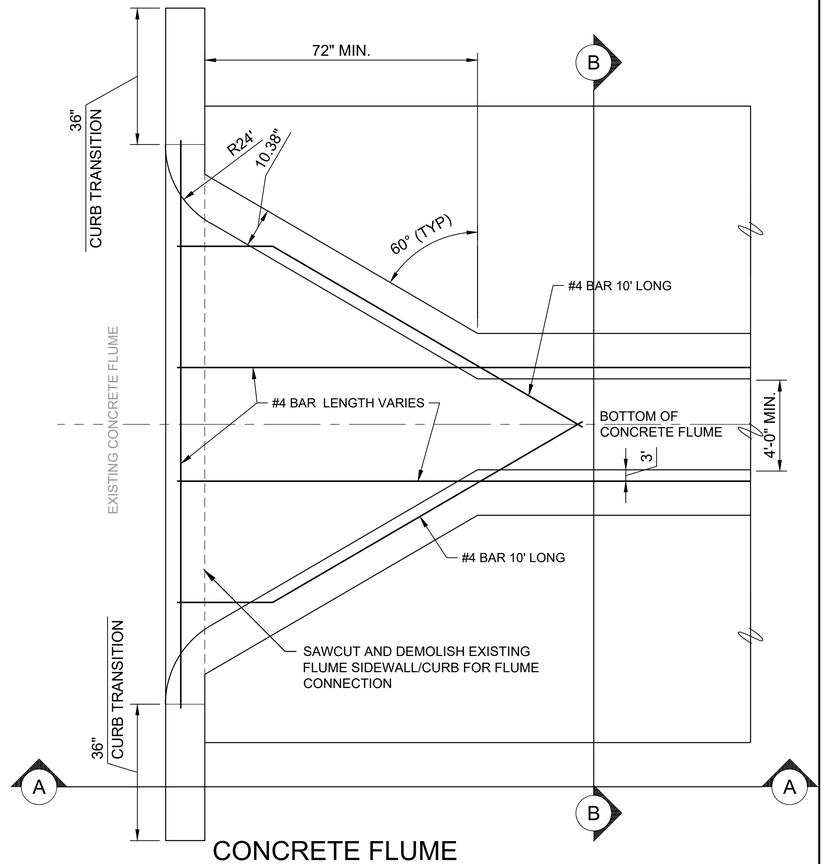

CONCRETE FLUME REPLACEMENT PLAN

A4

US Army Corps of Engineers®
Louisville District

TANYA NORMAN, P.E.
P.E. No. 0038055, GA
REGISTERED PROFESSIONAL ENGINEER
GEORGIA
No. PE038055
TANYA L. NORMAN
DATE: 01/09/2026

MARK	DESCRIPTION	DATE

ISSUE DATE: JANUARY 9, 2026
SOLICITATION NO.:
CONTRACT NO.:
FILE NUMBER: 1230216

DESIGNED BY: T. NORMAN
DRAWN BY: J.P. ARISTIZABAL
CHECKED BY: D.M. LECKIE
SUBMITTED BY: A. ZIEHM
SCALE: ANSI D
FILE NAME: C-500.dwg

U.S. ARMY CORPS OF ENGINEERS
LOUISVILLE DISTRICT
LOUISVILLE, KENTUCKY 40210-0059

POND
3200 GATEWAY LANE, SUITE 500 NORCROSS, GA 30092
PHONE (678) 336-2743
POND PROJECT NO. 170278

REPAIR & MAINTAIN AIRFIELD STORMWATER SYSTEM
PHASE II
DOBBINS AIR RESERVE BASE, GEORGIA
PROJECT NO.: FGWB 21-0002 & FGWB 25-0006
P2#: 470584

CONSTRUCTION DETAILS

SHEET ID
C-508

FILE PATH: X:\FY23\123021\60\4.CAD BIM\04.02.CAD_PH 2 SHEETS\CAD\C-500 PLOTTED: 01/09/2026 BY: NORMAN, TANYA

CERTIFIED FINAL

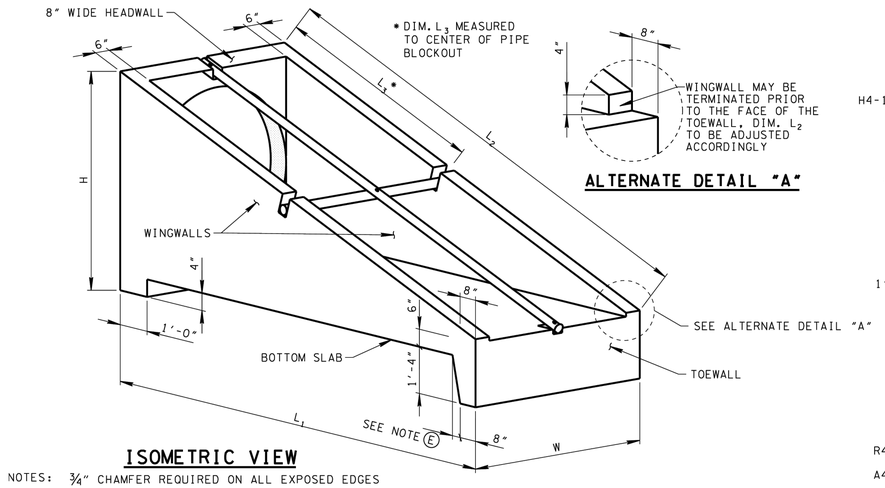

ISOMETRIC VIEW

NOTES: ¾" CHAMFER REQUIRED ON ALL EXPOSED EDGES

ALTERNATE DETAIL "A"

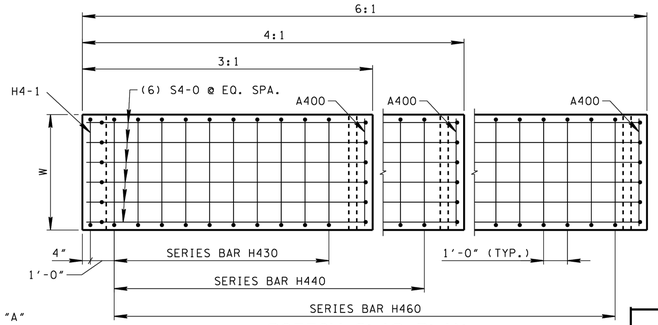

BOTTOM SLAB PLAN

GENERAL NOTES

(A) DRAWING TO BE USED FOR ALL CAST-IN-PLACE AND ALL PRECAST 36" CONCRETE ENDWALLS (TYPE "U") FOR CROSS DRAINS ONLY. "U" ENDWALL TO BE PLACED AT 90° SKEW TO CENTERLINE.

(C) "-" IN BAR DESIGNATION REPRESENTS 3, 4 OR 6 FOR 3:1, 4:1 OR 6:1 SLOPES, RESPECTIVELY.

(D) SPLICING OF REINFORCEMENT IS ACCEPTABLE PROVIDED THAT A MINIMUM 21" SPLICE LENGTH IS USED.

(E) TOEWALL BACK SLOPE MAY BE CONSTRUCTED VARIABLE FROM VERTICAL UP TO 15°.

(G) THE CONTRACTOR MAY ELECT TO SUBSTITUTE AN APPROVED ALTERNATIVE DESIGN.

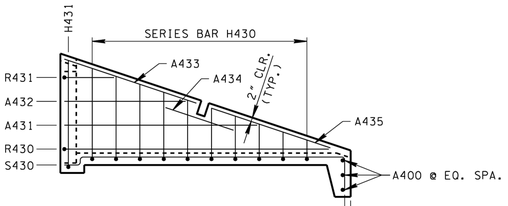

3:1 WINGWALL ELEVATION

NOTE: A-BARS IN HEADWALL NOT SHOWN FOR CLARITY.

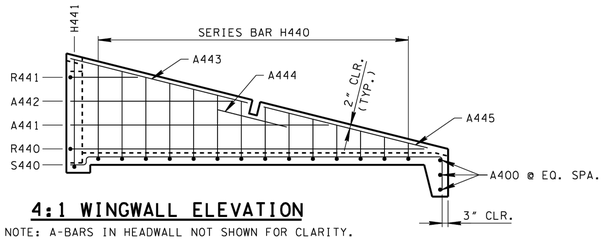

4:1 WINGWALL ELEVATION

NOTE: A-BARS IN HEADWALL NOT SHOWN FOR CLARITY.

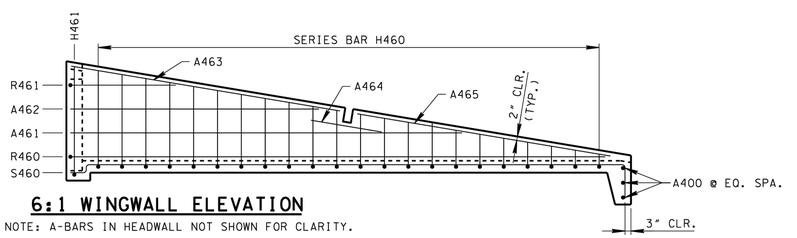

6:1 WINGWALL ELEVATION

NOTE: A-BARS IN HEADWALL NOT SHOWN FOR CLARITY.

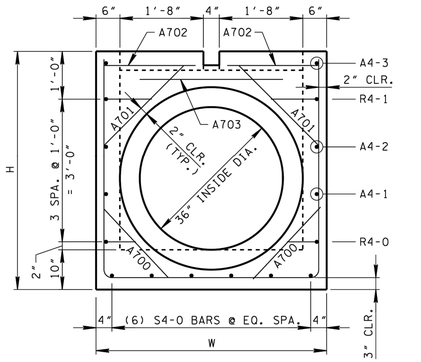

ELEVATION

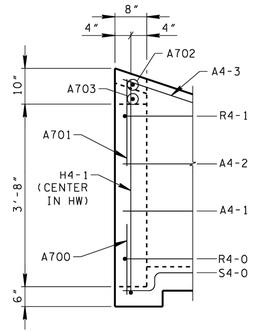

PARTIAL VIEW A-A

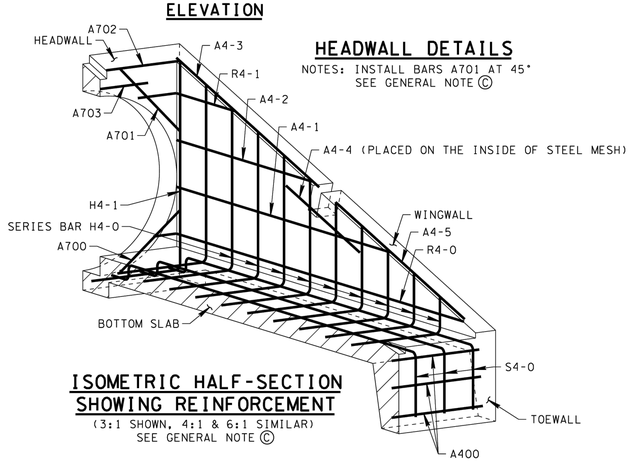

ISOMETRIC HALF-SECTION SHOWING REINFORCEMENT

(3:1 SHOWN, 4:1 & 6:1 SIMILAR)
SEE GENERAL NOTE (C)

HEADWALL DETAILS

NOTES: INSTALL BARS A701 AT 45°
SEE GENERAL NOTE (C)

DIMENSIONS AND QUANTITIES FOR ONE ENDWALL 36" PIPE										
SLOPE	CONCRETE ENDWALL DIMENSIONS					STRUCTURAL STEEL PIPE DIMENSIONS		ESTIMATED QUANTITIES		
	H	L_1	L_2	L_3	W	LG	WG	CLASS "A" CONC. CU. YD.	STEEL BAR REINF. LB.	STRUCTURAL STEEL LB.
4:1	5' - 0"	16' - 0"	16' - 5⅞"	8' - 2½"	4' - 8"		4' - 8"	3.08	276	160

A1 ENDWALL - 36" PIPE
NO SCALE (GDOT)

US Army Corps of Engineers®
Louisville District

TANYA NORMAN, P.E.
P.E. No. 0038055, GA
GEORGIA REGISTERED No. PE038055 PROFESSIONAL ENGINEER TANYA L. NORMAN
DATE: 01/09/2026

MARK	DESCRIPTION	DATE

DESIGNED BY: T. NORMAN
DRAWN BY: J.P. ARISTIZABAL
CHECKED BY: D.M. LEECKE
SUBMITTED BY: S.DIEHR
SIZE: ANSI D
ISSUE DATE: JANUARY 9, 2026
SOLICITATION NO.:
CONTRACT NO.:
FILE NUMBER: 4230218
FILE NAME: C-500.dwg

U.S. ARMY CORPS OF ENGINEERS
LOUISVILLE DISTRICT
LOUISVILLE, KENTUCKY 40210-0059

POND
3320 ROBINHOOD LANE
SUITE 300
ATLANTA, GEORGIA 30305
PHONE: (678) 336-2753
PHONE: (678) 336-2754

REPAIR & MAINTAIN AIRFIELD STORMWATER SYSTEM
PHASE II
DOBBINS AIR RESERVE BASE, GEORGIA
PROJECT NO.: FGWB 21-0002 & FGWB 25-0006
P2#: 470584

CONSTRUCTION DETAILS

SHEET ID
C-509

CERTIFIED FINAL

FILE PATH: X:\PY23\123021804\CAD BIM\04.02.CAD_PH 2 SHEETS\CAD\C-500 PLOTTED: 01/09/2026 BY: NORMAN, TANYA

BILL OF STEEL (GDOT)

CODE NO.	LOCATION	BAR SIZE	3:1 WINGWALL SLOPE						4:1 WINGWALL SLOPE						6:1 WINGWALL SLOPE					
			BENDING DIMENSIONS				NO. REQ'D	LENGTH	BENDING DIMENSIONS				NO. REQ'D	LENGTH	BENDING DIMENSIONS				NO. REQ'D	LENGTH
			a	b	c	d			a	b	c	d			a	b	c	d		
A400	TOEWALL	4	4' - 4"	-	-	-	3	4' - 4"	4' - 4"	-	-	-	3	4' - 4"	4' - 4"	-	-	-	3	4' - 4"
A431	WINGWALLS	4	8' - 1"	-	-	-	2	8' - 1"	-	-	-	-	-	-	-	-	-	-	-	-
A432	WINGWALLS	4	5' - 1"	-	-	-	2	5' - 1"	-	-	-	-	-	-	-	-	-	-	-	-
A433	WINGWALLS	4	5' - 9 ½"	-	-	-	2	5' - 9 ½"	-	-	-	-	-	-	-	-	-	-	-	-
A434	WINGWALLS	4	3' - 0"	-	-	-	2	3' - 0"	-	-	-	-	-	-	-	-	-	-	-	-
A435	WINGWALLS	4	5' - 4"	-	-	-	2	5' - 4"	-	-	-	-	-	-	-	-	-	-	-	-
A441	WINGWALLS	4	-	-	-	-	-	-	10' - 10"	-	-	-	2	10' - 10"	-	-	-	-	-	-	-
A442	WINGWALLS	4	-	-	-	-	-	-	6' - 10"	-	-	-	2	6' - 10"	-	-	-	-	-	-	-
A443	WINGWALLS	4	-	-	-	-	-	-	7' - 7 ½"	-	-	-	2	7' - 7 ½"	-	-	-	-	-	-
A444	WINGWALLS	4	-	-	-	-	-	-	3' - 0"	-	-	-	2	3' - 0"	-	-	-	-	-	-
A445	WINGWALLS	4	-	-	-	-	-	-	7' - 2 ½"	-	-	-	2	7' - 2 ½"	-	-	-	-	-	-
A461	WINGWALLS	4	-	-	-	-	-	-	-	-	-	-	-	-	16' - 5"	-	-	-	2	16' - 5"
A462	WINGWALLS	4	-	-	-	-	-	-	-	-	-	-	-	-	10' - 5"	-	-	-	2	10' - 5"
A463	WINGWALLS	4	-	-	-	-	-	-	-	-	-	-	-	-	11' - 5 ½"	-	-	-	2	11' - 5 ½"
A464	WINGWALLS	4	-	-	-	-	-	-	-	-	-	-	-	-	3' - 0"	-	-	-	2	3' - 0"
A465	WINGWALLS	4	-	-	-	-	-	-	-	-	-	-	-	-	10' - 10"	-	-	-	2	10' - 10"
A700	HEADWALL	7	1' - 11"	-	-	-	2	1' - 11"	1' - 11"	-	-	-	2	1' - 11"	1' - 11"	-	-	-	2	1' - 11"
A701	HEADWALL	7	2' - 4"	-	-	-	2	2' - 4"	2' - 4"	-	-	-	2	2' - 4"	2' - 4"	-	-	-	2	2' - 4"
A702	HEADWALL	7	1' - 10"	-	-	-	2	1' - 10"	1' - 10"	-	-	-	2	1' - 10"	1' - 10"	-	-	-	2	1' - 10"
A703	HEADWALL	7	3' - 0"	-	-	-	1	3' - 0"	3' - 0"	-	-	-	1	3' - 0"	3' - 0"	-	-	-	1	3' - 0"
SERIES H430	BOTTOM SLAB & WINGWALL	4	4' - 4"	*	-	-	1	89' - 2"	-	-	-	-	-	-	-	-	-	-	-	-
			* DIMENSION "b" VARIES FROM 3'-9 ½" TO 0'-9 ½" IN INCREMENTS OF 0'-4" (10 BARS)																	
H431	BOTTOM SLAB & HEADWALL	4	4' - 4"	4' - 5 ½"	-	-	1	13' - 3"	-	-	-	-	-	-	-	-	-	-	-	-
SERIES H440	BOTTOM SLAB & WINGWALL	4	-	-	-	-	-	-	4' - 4"	*	-	-	1	124' - 10"	-	-	-	-	-	-
									* DIMENSION "b" VARIES FROM 3'-11" TO 0'-8" IN INCREMENTS OF 0'-3" (14 BARS)											
H441	BOTTOM SLAB & HEADWALL	4	-	-	-	-	-	-	4' - 4"	4' - 6"	-	-	1	13' - 4"	-	-	-	-	-	-
SERIES H460	BOTTOM SLAB & WINGWALL	4	-	-	-	-	-	-	-	-	-	-	-	-	4' - 4"	*	-	-	1	195' - 3"
															* DIMENSION "b" VARIES FROM 4'-0 ¼" TO 0'-6 ¼" IN INCREMENTS OF 0'-2" (22 BARS)					
H461	BOTTOM SLAB & HEADWALL	4	-	-	-	-	-	-	-	-	-	-	-	-	4' - 4"	4' - 6 ¼"	-	-	1	13' - 4 ½"
R430	HEADWALL & WINGWALL	4	11' - 1"	0' - 7 ½"	-	-	2	11' - 8 ½"	-	-	-	-	-	-	-	-	-	-	-	-
R431	HEADWALL & WINGWALL	4	2' - 1"	1' - 0"	-	-	2	3' - 1"	-	-	-	-	-	-	-	-	-	-	-	-
R440	HEADWALL & WINGWALL	4	-	-	-	-	-	-	14' - 10"	0' - 7 ½"	-	-	2	15' - 5 ½"	-	-	-	-	-	-
R441	HEADWALL & WINGWALL	4	-	-	-	-	-	-	2' - 10"	1' - 0"	-	-	2	3' - 10"	-	-	-	-	-	-
R460	HEADWALL & WINGWALL	4	-	-	-	-	-	-	-	-	-	-	-	-	22' - 5"	0' - 7 ½"	-	-	2	23' - 0 ½"
R461	HEADWALL & WINGWALL	4	-	-	-	-	-	-	-	-	-	-	-	-	4' - 5"	1' - 0"	-	-	2	5' - 5"
S430	BOTTOM SLAB & TOEWALL	4	11' - 1 ½"	0' - 4 ½"	0' - 8"	1' - 5"	6	13' - 7"	-	-	-	-	-	-	-	-	-	-	-	-
S440	BOTTOM SLAB & TOEWALL	4	-	-	-	-	-	-	14' - 11 ½"	0' - 4 ½"	0' - 8"	1' - 5"	6	17' - 5"	-	-	-	-	-	-
S460	BOTTOM SLAB & TOEWALL	4	-	-	-	-	-	-	-	-	-	-	-	-	22' - 7 ½"	0' - 4 ½"	0' - 8"	1' - 5"	6	25' - 1"

PRECAST NOTES

PRECAST UNITS:

THE CONTRACTOR MAY, WITH PERMISSION FROM THE GOV'T, SUBSTITUTE PRECAST ENDWALLS FOR CAST-IN-PLACE ENDWALLS PROVIDED THAT:

① APPROPRIATE SIZING AND LOCATION OF THE LIFTING INSERTS SHALL BE THE RESPONSIBILITY OF THE FABRICATOR TO ASSURE BALANCED HANDLING DURING INSTALLATION OF THE PRECAST ENDWALL.

② THE CONTRACTOR TO PATCH ALL LIFTING INSERT HOLES AND PLACE A MINIMUM OF ONE (1) INCH OF COVER OVER THE HARDWARE OF THESE DEVICES ON BOTH TOP AND BOTTOM SURFACES.

③ PAYMENT FOR PRECAST ENDWALLS BASED ON THE QUANTITIES FOR CAST-IN-PLACE ENDWALLS IS ACCEPTABLE.

④ PRECAST ENDWALL UNITS WHICH ARE DAMAGED DURING SHIPMENT OR INSTALLATION WILL BE REJECTED. IT SHALL BE THE RESPONSIBILITY OF THE CONTRACTOR TO REPLACE THE DAMAGED ENDWALL UNITS AT HIS OWN EXPENSE.

⑤ PIPE OPENINGS FOR HEADWALLS ARE BASED ON REINFORCED CONCRETE PIPE WITH TYPE "B" WALL THICKNESS (AASHTO M170).

⑥ ADDITIONAL REINFORCING STEEL NECESSARY TO MAINTAIN THE INTEGRITY OF THE STRUCTURE DURING HANDLING AND PLACEMENT SHALL BE THE RESPONSIBILITY OF THE FABRICATOR.

CONCRETE: $f'c$=4,500 POUNDS PER SQUARE INCH MINIMUM AT 28 DAYS.
REINFORCING STEEL: ASTM A615, Fy=60,000 POUNDS PER SQUARE INCH.

REINFORCING STEEL LEGEND

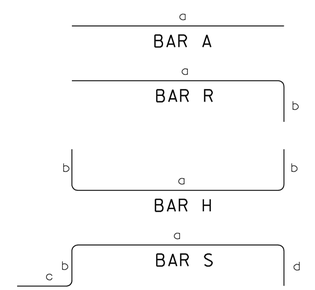

REINFORCING STEEL CODE

TYPE	SIZE	SERIES
A	5	06

DIMENSIONS SHOWN ON THIS SHEET ARE OUTSIDE TO OUTSIDE OF BAR.

STANDARD C.R.S.I. HOOK DETAILS SHALL APPLY, EXCEPT AS NOTED.

A1 HEADWALL REINFORCEMENT REQUIREMENTS
NO SCALE

US Army Corps of Engineers®
Louisville District

TANYA NORMAN, P.E.
P.E. No. 0038055, GA
GEORGIA REGISTERED No. PE0038055 PROFESSIONAL ENGINEER TANYA L. NORMAN
DATE: 01/09/2026

MARK	DESCRIPTION	DATE

DESIGNED BY: T. NORMAN
DRAWN BY: J.P. ARISTIZABAL
CHECKED BY: D.M. LECKIE
SUBMITTED BY: A. DUERR
SIZE: ANSI D
ISSUE DATE: JANUARY 9, 2026
SOLICITATION NO.:
CONTRACT NO.:
FILE NUMBER: 1230216
FILE NAME: C-500.dwg

U.S. ARMY CORPS OF ENGINEERS
LOUISVILLE DISTRICT
LOUISVILLE, KENTUCKY 40210-0059

POND
3200 CROASDAILE DRIVE, SUITE 300
DURHAM, NORTH CAROLINA 27705
PHONE (919) 490-4900
FAX (919) 490-4901
POND

REPAIR & MAINTAIN AIRFIELD STORMWATER SYSTEM
PHASE II
DOBBINS AIR RESERVE BASE, GEORGIA
PROJECT NO.: FGWB 21-0002 & FGWB 25-0006
P2#: 470584

CONSTRUCTION DETAILS

SHEET ID
C-510

CERTIFIED FINAL

FILE PATH: X:\PY23\123021804\CAD BIM\04.02.CAD_PH 2 SHEETS\CADIC-500 PLOTTED: 01/09/2026 BY: NORMAN, TANYA

DIMENSIONS							QUANTITIES ONE STRAIGHT ENDWALL				CONC. IN WALL & FTG. FOR EACH ADDL. PIPE LINE
OPENING		WALL			FOOTING		CLASS "B" CONCRETE				
D	AREA SQ. FT.	G	H	B	E	F	CUBIC FEET WALL	CUBIC FEET FOOT	TOTAL CU. FT.	TOTAL CU.YD.	CU.YD.
12"	0.8	4'0"	2'0"	1'2"	1'10"	1'0"	7.2	7.3	14.5	0.54	0.25
15"	1.2	5'0"	2'3"	1'2"	1'10"	1'2"	9.9	10.7	20.6	0.76	0.36
18"	1.8	6'0"	2'6"	1'3"	1'11"	1'3"	13.6	14.4	28.0	1.04	0.48
24"	3.1	8'0"	3'0"	1'4"	2'0"	1'4"	22.3	21.3	43.6	1.62	0.74
30"	4.9	10'0"	3'6"	1'6"	2'2"	1'6"	34.7	32.5	67.2	2.49	1.13
36"	7.1	12'0"	4'0"	1'8"	2'4"	1'8"	50.5	46.7	97.2	3.60	1.62
42"	9.6	14'0"	4'6"	1'10"	2'6"	2'0"	70.3	70.0	140.3	5.20	2.13
48"	12.6	16'0"	5'0"	2'1"	2'9"	2'0"	96.9	88.0	184.9	6.85	2.58
54"	16.0	18'0"	5'6"	2'4"	3'0"	2'0"	129.4	108.0	237.4	8.79	3.07
60"	19.6	20'0"	6'0"	2'6"	3'2"	2'0"	164.6	126.7	291.3	10.79	3.53

FOR EACH ADDITIONAL PIPE LINE, ADD TO G: OD+(ID OR 3 FEET, WHICHEVER IS SMALLER)

DIMENSIONS							QUANTITIES ONE "U" ENDWALL				
OPENING		WALL			FOOTING		CLASS "B" CONCRETE				STEEL TIE RODS
D	AREA SQ.FT	G	H	K	F	J	CUBIC FEET WALL	CUBIC FEET FOOT	TOTAL CU.FT.	TOTAL CU.YD.	
2:1 FILL SLOPES											
12"	0.8	3'8"	2'0"	1'0"	1'3"	2'2"	6.6	7.3	13.9	0.52	NONE
15"	1.2	3'11"	2'3"	1'5"	1'3"	2'7"	8.3	9.1	17.4	0.64	NONE
18"	1.8	4'2"	2'6"	1'9"	1'3"	2'11"	9.9	10.7	20.6	0.76	NONE
24"	3.1	4'8"	3'0"	2'6"	1'6"	3'8"	13.9	15.5	29.4	1.09	2-3/4"DIA.x2'0"
30"	4.9	5'2"	3'6"	3'3"	1'6"	4'5"	18.7	20.0	38.7	1.43	2-3/4"DIA.x2'0"
36"	7.1	5'8"	4'0"	4'0"	1'9"	5'2"	21.2	26.2	50.4	1.87	2-3/4"DIA.x2'0"
42"	9.6	6'2"	4'6"	4'9"	2'0"	5'11"	30.3	33.2	63.5	2.35	2-3/4"DIA.x2'6"
48"	12.6	6'8"	5'0"	5'6"	2'0"	6'8"	37.3	39.6	76.9	2.85	2-3/4"DIA.x3'0"
54"	16.0	7'2"	5'6"	6'3"	2'0"	7'5"	44.2	45.9	90.1	3.33	2-3/4"DIA.x3'6"
60"	19.6	7'8"	6'0"	7'0"	2'0"	8'2"	51.1	49.1	100.2	3.71	2-3/4"DIA.x4'0"
3:1 FILL SLOPES											
12"	0.8	3'8"	2'0"	2'0"	1'3"	3'2"	7.7	9.9	17.6	0.65	NONE
15"	1.2	3'11"	2'3"	2'9"	1'3"	3'11"	10.0	12.8	22.8	0.84	NONE
18"	1.8	4'2"	2'6"	3'6"	1'3"	4'8"	12.5	16.0	28.5	1.06	NONE
24"	3.1	4'8"	3'0"	5'0"	1'6"	6'2"	18.8	24.0	42.8	1.58	2-3/4"DIA.x2'0"
30"	4.9	5'2"	3'6"	6'6"	1'6"	7'8"	26.3	32.3	58.6	2.17	2-3/4"DIA.x2'0"
36"	7.1	5'8"	4'0"	8'0"	1'9"	9'2"	35.1	42.8	77.9	2.89	2-3/4"DIA.x2'0"
42"	9.6	6'2"	4'6"	9'6"	2'0"	10'8"	45.4	54.5	99.9	3.70	2-3/4"DIA.x2'6"
48"	12.6	6'8"	5'0"	11'0"	2'0"	12'2"	56.9	66.5	123.4	4.57	2-3/4"DIA.x3'0"
54"	16.0	7'2"	5'6"	12'6"	2'0"	13'8"	66.7	79.5	146.2	5.41	2-3/4"DIA.x3'6"
60"	19.6	7'8"	6'0"	13'4"	2'0"	17'2"	81.0	87.9	168.9	6.25	2-3/4"DIA.x4'0"
4:1 FILL SLOPES											
12"	0.8	3'8"	2'0"	2'8"	1'3"	3'10"	8.4	11.8	20.2	0.75	NONE
15"	1.2	3'11"	2'3"	3'8"	1'3"	4'10"	11.2	15.5	26.6	0.98	NONE
18"	1.8	4'2"	2'6"	4'8"	1'3"	5'10"	14.3	19.6	33.9	1.26	NONE
24"	3.1	4'8"	3'0"	6'8"	1'6"	7'10"	22.0	29.8	51.8	1.92	2-3/4"DIA.x2'0"
30"	4.9	5'2"	3'6"	8'8"	1'6"	9'10"	31.3	40.7	72.0	2.67	2-3/4"DIA.x2'0"
36"	7.1	5'8"	4'0"	10'8"	1'9"	11'10"	42.5	54.1	96.6	3.58	2-3/4"DIA.x2'0"
42"	9.6	6'2"	4'6"	12'8"	2'0"	13'10"	55.4	69.2	124.6	4.61	2-3/4"DIA.x2'6"
48"	12.6	6'8"	5'0"	14'8"	2'0"	15'10"	70.0	84.8	154.8	5.73	2-3/4"DIA.x3'0"
54"	16.0	7'2"	5'6"	16'8"	2'0"	17'10"	86.4	101.9	188.3	6.97	2-3/4"DIA.x3'6"
60"	19.6	7'8"	6'0"	18'8"	2'0"	19'10"	104.7	120.5	225.2	8.34	2-3/4"DIA.x4'0"

DIMENSIONS							QUANTITIES ONE ENDWALL WITH 45° WING WALLS				
OPENING		WALL			FOOTING		CLASS "B" CONCRETE				STEEL TIE RODS
D	AREA SQ. FT.	H	G	L	M	F	CUBIC FEET WALL	CUBIC FEET FOOT	TOTAL CU.FT.	TOTAL CU.YD.	
2:1 SLOPES											
18"	1.8	2'6"	3'10"	1'2"	1'7"	1'3"	9.3	10.7	20.0	0.74	NONE
24"	3.1	3'0"	4'4"	1'5"	2'1"	1'4"	13.1	14.4	27.5	1.02	2-3/4"DIA.x2'0"
30"	4.9	3'6"	4'10"	1'9"	2'5"	1'6"	17.4	18.8	36.7	1.34	2-3/4"DIA.x2'0"
36"	7.1	4'0"	5'4"	2'0"	2'11"	1'8"	22.6	24.6	47.2	1.75	2-3/4"DIA.x3'0"
42"	9.6	4'6"	5'10"	2'3"	3'6"	2'0"	29.1	34.6	63.7	2.36	2-3/4"DIA.x3'0"
48"	12.6	5'0"	6'4"	2'6"	4'0"	2'0"	35.9	39.1	75.0	2.78	2-3/4"DIA.x3'0"
54"	16.0	5'6"	6'10"	2'9"	4'6 1/4"	2'0"	42.9	46.6	89.5	3.31	2-3/4"DIA.x3'0"
60"	19.6	6'0"	7'4"	3'0"	5'0 1/2"	2'0"	51.8	51.1	102.9	3.81	2-3/4"DIA.x3'0"
3:1 SLOPES											
18"	1.8	2'6"	3'10"	1'2"	1'9"	1'3"	10.7	14.5	25.2	0.93	NONE
24"	3.1	3'0"	4'4"	1'5"	2'10"	1'4"	16.6	17.8	34.4	1.27	2-3/4"DIA.x2'0"
30"	4.9	3'6"	4'10"	1'9"	3'6"	1'6"	22.9	24.4	47.3	1.71	2-3/4"DIA.x2'0"
36"	7.1	4'0"	5'4"	2'1"	4'3"	1'8"	30.2	32.0	62.2	2.30	2-3/4"DIA.x3'0"
42"	9.6	4'6"	5'10"	2'5"	4'11"	2'0"	38.8	44.0	82.8	3.07	2-3/4"DIA.x3'0"
48"	12.6	5'0"	6'4"	2'8"	5'6"	2'0"	47.5	48.6	96.1	3.56	2-3/4"DIA.x3'0"
54"	16.0	5'6"	6'10"	3'2"	6'1"	2'0"	57.0	53.4	110.4	4.09	2-3/4"DIA.x3'0"
60"	19.6	6'0"	7'4"	3'6"	6'9"	2'0"	68.5	59.1	127.6	4.73	2-3/4"DIA.x3'0"

INLET BEVEL DETAIL

METHOD OF EXTENDING PIPE AND RETAINING EXISTING HEADWALL

CONCRETE WITHIN THE HATCHED AREA TO BE REMOVED BY CHIPPING OR IN A MANNER APPROVED BY THE ENGINEER, FORMING A RECESS NO LESS THAN 1" LARGER THAN THE OUTSIDE DIMENSION OF THE PIPE.

NOTE: THE 3'-0" DIMENSION IS BASED ON DITCH SECTION 1' DEEP. VARY ACCORDING TO DITCH SECTION SO AS TO KEY 1'0" INTO BACK SLOPE OF DITCH.

CONCRETE ENDWALLS WITH "L" TYPE WINGS

NOTE: THESE QUANTITIES WILL VARY ACCORDING TO DITCH SECTION AND ARE TO BE USED FOR ESTIMATING PURPOSES ONLY. PAYMENT TO BE MADE ACCORDING TO QUANTITIES MEASURED AS ACTUALLY PLACED.

DIMENSIONS					QUANTITIES ONE "L" ENDWALL	
D	AREA SQ.FT.	H MIN.	4D TYP.	D+30 TYP.	CU. YD. CONC.	STEEL TIE RODS
15"	1.2	2'3"	5'0"	3'9"	1.08	2-3/4"DIA.x5'0"
18"	1.8	2'6"	6'0"	4'0"	1.24	2-3/4"DIA.x6'0"
24"	3.1	3'0"	8'0"	4'6"	1.59	2-3/4"DIA.x8'0"
30"	4.9	3'6"	10'0"	5'0"	2.00	2-3/4"DIA.x10'0"
36"	7.1	4'0"	12'0"	5'6"	2.46	2-3/4"DIA.x12'0"
42"	9.6	4'6"	14'0"	6'0"	2.98	2-3/4"DIA.x14'0"
48"	12.6	5'0"	16'0"	6'6"	3.53	2-3/4"DIA.x16'0"
54"	16.0	5'6"	18'0"	7'0"	4.13	2-3/4"DIA.x18'0"
60"	19.6	6'0"	20'0"	7'6"	4.85	2-3/4"DIA.x20'0"

3:1 FILL SLOPES

NOTE:
QUANTITIES OF CONCRETE ARE BASED ON INSIDE DIAMETER OF PIPE. NO DEDUCTIONS SHALL BE MADE FOR SHELL THICKNESS OR SKEW OF PIPE IN COMPUTING PAY QUANTITIES.

SECTION SHOWING MINIMUM COVER OVER CULVERTS

NOTE: GRADE GENERALLY TO FOLLOW SLOPE OF STREAM.

⊛ IF PIPE HAS NEITHER A GROOVE NOR A SPIGOT AT ITS INLET, AN INLET BEVEL WILL BE REQ'D.

A1 CONCRETE HEADWALL
NO SCALE (GDOT)

US Army Corps of Engineers® Louisville District

TANYA NORMAN, P.E.
P.E. No. 0038055, GA
GEORGIA REGISTERED No. PE038055 PROFESSIONAL ENGINEER TANYA L. NORMAN
DATE: 01/09/2026

MARK	DESCRIPTION	DATE

ISSUE DATE: JANUARY 9, 2026
SOLICITATION NO.:
CONTRACT NO.:
FILE NUMBER: 1230218
DESIGNED BY: T. NORMAN
DRAWN BY: J.P. ARISTIZABAL
CHECKED BY: D.M. LECKIE
SUBMITTED BY: A. DUEHR
SIZE: ANSI D
FILE NAME: C-500.dwg

U.S. ARMY CORPS OF ENGINEERS
LOUISVILLE DISTRICT
LOUISVILLE, KENTUCKY 40210-0059

POND
3500 PARKWAY LANE
SUITE 500
PEACHTREE CORNERS, GA 30092
PHONE (678) 336-7740
POND JOB No. 1230218

REPAIR & MAINTAIN AIRFIELD STORMWATER SYSTEM
PHASE II
DOBBINS AIR RESERVE BASE, GEORGIA
PROJECT NO.: FGWB 21-0002 & FGWB 25-0006
P2#: 470584

CONSTRUCTION DETAILS

SHEET ID
C-511

CERTIFIED FINAL

FILE PATH: X:\FY23\1230218\04.CAD BIM\04.02.CAD_PH 2 SHEETS\CAD\C-500 PLOTTED: 01/09/2026 BY: NORMAN, TANYA

CULVERT STANDARDS BY SPAN AND HEIGHT						
SIZE (feet) SPAN	HEIGHT	SINGLES Standard Number & Sheet	DOUBLES Standard Number & Sheet	TRIPLES Standard Number & Sheet	SIZE (feet) HEIGHT	SPAN
4	3, 4, 5, 6	2401-1, 2-A, 3	2402-1, 2-A, 3	2403-1, 2-A, 3	3, 4, 5, 6	4
5	3, 4	2401-1, 2-B, 3	2402-1, 2-B, 3	2403-1, 2-B, 3	3, 4	5
5	5, 6, 7, 8	2401-1, 2-C, 3	2402-1, 2-C, 3	2403-1, 2-C, 3	5, 6, 7, 8	5
6	3, 4	2401-1, 2-D, 3	2402-1, 2-D, 3	2403-1, 2-D, 3	3, 4	6
6	5, 6, 7, 8	2401-1, 2-E, 3	2402-1, 2-E, 3	2403-1, 2-E, 3	5, 6, 7, 8	6
7	4	2401-1, 2-F, 3	2402-1, 2-F, 3	2403-1, 2-F, 3	4	7
7	5, 6, 7, 8	2401-1, 2-G, 3	2402-1, 2-G, 3	2403-1, 2-G, 3	5, 6, 7, 8	7
8	4, 5, 6	2401-1, 2-H, 3	2402-1, 2-H, 3	2403-1, 2-H, 3	4, 5, 6	8
8	7, 8, 9, 10	2401-1, 2-I, 3	2402-1, 2-I, 3	2403-1, 2-I, 3	7, 8, 9, 10	8
9	4, 5, 6	2401-1, 2-J, 3	2402-1, 2-J, 3	2403-1, 2-J, 3	4, 5, 6	9
9	7, 8, 9, 10	2401-1, 2-K, 3	2402-1, 2-K, 3	2403-1, 2-K, 3	7, 8, 9, 10	9
10	4	2401-1, 2-L, 3	2402-1, 2-L, 3	2403-1, 2-L, 3	4	10
10	5, 6, 7, 8	2401-1, 2-M, 3	2402-1, 2-M, 3	2403-1, 2-M, 3	5, 6, 7, 8	10
10	9, 10, 11, 12	2401-1, 2-N, 3	2402-1, 2-N, 3	2403-1, 2-N, 3	9, 10, 11, 12	10

WINGWALLS AND PARAPETS STANDARDS BY SKEW	
SKEW	Standard Number & Sheet
90 DEG	2404-1
75 DEG	2405-1, 2
60 DEG	2405-1, 2
45 DEG	2405-1, 3

APRON STANDARDS
Standard Number & Sheet
2406-1, 2

STATE	PROJECT NUMBER	SHEET NO.	TOTAL SHEETS
GA.			

INDEX OF BOX CULVERTS				
STANDARD		INDEX	SHEET	TITLE
SINGLES	2401	2401-1	1 OF 3	REINFORCED CONCRETE SINGLE BOX CULVERT
		2401-2-A	2-A OF 3	4'X3', 4'X4', 4'X5' AND 4'X6'
		2401-2-B	2-B OF 3	5'X3' AND 5'X4'
		2401-2-C	2-C OF 3	5'X5', 5'X6', 5'X7' AND 5'X8'
		2401-2-D	2-D OF 3	6'X3' AND 6'X4'
		2401-2-E	2-E OF 3	6'X5', 6'X6', 6'X7' AND 6'X8'
		2401-2-F	2-F OF 3	7'X4'
		2401-2-G	2-G OF 3	7'X5', 7'X6', 7'X7' AND 7'X8'
		2401-2-H	2-H OF 3	8'X4', 8'X5' AND 8'X6'
		2401-2-I	2-I OF 3	8'X7', 8'X8', 8'X9' AND 8'X10'
		2401-2-J	2-J OF 3	9'X4', 9'X5' AND 9'X6'
		2401-2-K	2-K OF 3	9'X7', 9'X8', 9'X9'AND 9'X10'
		2401-2-L	2-L OF 3	10'X4'
		2401-2-M	2-M OF 3	10'X5'. 10'X6'. 10'X7' AND 10'X8'
		2401-2-N	2-N OF 3	10'X9', 10'X10', 10'X11' AND 10'X12'
		2401-3	3 OF 3	REINFORCED CONCRETE SINGLE BOX CULVERT
DOUBLES	2402	2402-1	1 OF 3	REINFORCED CONCRETE DOUBLE BOX CULVERT
		2402-2-A	2-A OF 3	4'X3', 4'X4', 4'X5' AND 4'X6'
		2402-2-B	2-B OF 3	5'X3' AND 5'X4'
		2402-2-C	2-C OF 3	5'X5', 5'X6', 5'X7' AND 5'X8'
		2402-2-D	2-D OF 3	6'X3' AND 6'X4'
		2402-2-E	2-E OF 3	6'X5', 6'X6', 6'X7' AND 6'X8'
		2402-2-F	2-F OF 3	7'X4'
		2402-2-G	2-G OF 3	7'X5', 7'X6', 7'X7' AND 7'X8'
		2402-2-H	2-H OF 3	8'X4', 8'X5' AND 8'X6'
		2402-2-I	2-I OF 3	8'X7', 8'X8', 8'X9' AND 8'X10'
		2402-2-J	2-J OF 3	9'X4', 9'X5' AND 9'X6'
		2402-2-K	2-K OF 3	9'X7', 9'X8', 9'X9'AND 9'X10'
		2402-2-L	2-L OF 3	10'X4'
		2402-2-M	2-M OF 3	10'X5'. 10'X6'. 10'X7' AND 10'X8'
		2402-2-N	2-N OF 3	10'X9', 10'X10', 10'X11' AND 10'X12'
		2402-3	3 OF 3	REINFORCED CONCRETE DOUBLE BOX CULVERT
TRIPLES	2403	2403-1	1 OF 3	REINFORCED CONCRETE TRIPLE BOX CULVERT
		2403-2-A	2-A OF 3	4'X3', 4'X4', 4'X5' AND 4'X6'
		2403-2-B	2-B OF 3	5'X3' AND 5'X4'
		2403-2-C	2-C OF 3	5'X5', 5'X6', 5'X7' AND 5'X8'
		2403-2-D	2-D OF 3	6'X3' AND 6'X4'
		2403-2-E	2-E OF 3	6'X5', 6'X6', 6'X7' AND 6'X8'
		2403-2-F	2-F OF 3	7'X4'
		2403-2-G	2-G OF 3	7'X5', 7'X6', 7'X7' AND 7'X8'
		2403-2-H	2-H OF 3	8'X4', 8'X5' AND 8'X6'
		2403-2-I	2-I OF 3	8'X7', 8'X8', 8'X9' AND 8'X10'
		2403-2-J	2-J OF 3	9'X4', 9'X5' AND 9'X6'
		2403-2-K	2-K OF 3	9'X7', 9'X8', 9'X9'AND 9'X10'
		2403-2-L	2-L OF 3	10'X4'
		2403-2-M	2-M OF 3	10'X5'. 10'X6'. 10'X7' AND 10'X8'
		2403-2-N	2-N OF 3	10'X9', 10'X10', 10'X11' AND 10'X12'
		2403-3	3 OF 3	REINFORCED CONCRETE TRIPLE BOX CULVERT

INDEX OF WINGWALLS, PARAPETS & APRONS				
WINGWALL & PARAPETS	2404	2404-1	1 OF 1	REINF. CONC. WINGWALLS, TOEWALLS AND PARAPETS FOR CONC. BOX CULVERTS
	2405	2405-1	1 OF 3	REINF. CONC. SKEWED WINGWALLS, TOEWALLS AND PARAPETS FOR 75 AND 60 DEGREES SKEWS
		2405-2	2 OF 3	REINF. CONC. SKEWED WINGWALLS, TOEWALLS AND PARAPETS FOR 75 AND 60 DEGREE SKEWS
		2405-3	3 OF 3	REINF. CONC. SKEWED WINGWALLS, TOEWALLS AND PARAPETS FOR 45 DEGREE SKEW
APRONS	2406	2406-1	1 OF 2	CONCRETE BOX CULVERT APRONS AND BAFFLES DETAIL
		2406-2	2 OF 2	CONCRETE BOX CULVERT APRONS AND BAFFLES DETAIL

DEPARTMENT OF TRANSPORTATION
STATE OF GEORGIA
STANDARD
INDEX OF REINFORCED CONCRETE BOX CULVERTS
NO SCALE SEPTEMBER 2017
DATE / REVISION / BY
DES. FBF DRW. HAC TRA. CHK. FBF (SUBMITTED) STATE DESIGN POLICY ENGINEER (APPROVED) Margaret B Pirkle CHIEF ENGINEER
NUMBER 2400 SHEET 1 OF 1

GDOT Georgia Department of Transportation P. I. No. XXXXXXX

STATE	PROJECT NUMBER	SHEET NO.	TOTAL SHEETS
GA.			

TRIPLE 6'-0" X 3'-0" BOX CULVERT								
BARREL REINFORCEMENT QUANTITIES AND DIMENSIONS								
DESIGN	1	2	3	4	5	6	7	8
BAR A	409A @ 6"	406A @ 6"	407A @ 6"	410A @ 6"	503A @ 6"			
BAR B	468 @ 6"	572 @ 6"	573 @ 6"	568 @ 6"	618 @ 6"			
BAR C	423 @ 6"	424 @ 6"	515 @ 6"	516 @ 6"	601 @ 6"			
BAR D	426 @ 6"	426 @ 6"	426 @ 6"	426 @ 6"	702 @ 12"			
BAR E	403 @ 12"	404 @ 12"	405 @ 12"	406 @ 12"	407 @ 12"			
BAR F	501 @ 12"	404 @ 12"	405 @ 12"	406 @ 12"	407 @ 12"			
BAR G IN 2 SLABS	66 - 401	66 - 401	66 - 401	66 - 401	72 - 401			
BAR H IN 4 WALLS	18 - 402	18 - 402	18 - 402	18 - 402	18 - 402			
BAR J IN EXT. CORNER	0	0	0	3-409B @ 6½"	3-413B @ 7"			
BAR J IN INT. CORNER	0	3-404B @ 5"	3-407B @ 5¾"	4-410B @ 6½"	4-414B @ 7"			
T_1	8"	9"	10"	11"	12"			
T_2	9"	10"	11"	12"	13"			
T_3	8"	9"	10"	11"	12"			
X	21'-4"	21'-6"	21'-8"	21'-10"	22'-0"			
Y	4'-5"	4'-7"	4'-9"	4'-11"	5'-1"			
YD³ CLASS AA CONCRETE/FT	1.517	1.677	1.840	2.004	2.170			
LB BAR REINF STEEL/FT	200.2	245.0	270.7	297.8	387.7			
PARAPET, BARREL END, AND TOEWALL QUANTITIES - 90° SKEW - TOTAL								
YD³ CLASS AA CONCRETE	7.5	7.7	7.8	7.9	8.1			
LB BAR REINF STEEL	1221	1220	1220	1219	1273			
PARAPET, BARREL END, AND TOEWALL QUANTITIES - 75° SKEW - TOTAL								
YD³ CLASS AA CONCRETE	7.9	8.0	8.1	8.3	8.4			
LB BAR REINF STEEL	1525	1527	1529	1530	1587			
PARAPET, BARREL END, AND TOEWALL QUANTITIES - 60° SKEW - TOTAL								
YD³ CLASS AA CONCRETE	8.8	8.9	9.1	9.2	9.4			
LB BAR REINF STEEL	1618	1620	1622	1625	1682			
PARAPET, BARREL END, AND TOEWALL QUANTITIES - 45° SKEW - TOTAL								
YD³ CLASS AA CONCRETE	10.8	11.0	11.2	11.3	11.5			
LB BAR REINF STEEL	1840	1844	1848	1851	1910			

TRIPLE 6'-0" X 4'-0" BOX CULVERT								
BARREL REINFORCEMENT QUANTITIES AND DIMENSIONS								
DESIGN	1	2	3	4	5	6	7	8
BAR A	416A @ 6"	413A @ 6"	415A @ 6"	418A @ 6"	506A @ 6"			
BAR B	470 @ 6"	572 @ 6"	571 @ 6"	568 @ 6"	618 @ 6"			
BAR C	423 @ 6"	424 @ 6"	515 @ 6"	516 @ 6"	601 @ 6"			
BAR D	426 @ 6"	426 @ 6"	426 @ 6"	426 @ 6"	702 @ 12"			
BAR E	408 @ 12"	409 @ 12"	410 @ 12"	411 @ 12"	412 @ 12"			
BAR F	502 @ 12"	409 @ 12"	410 @ 12"	411 @ 12"	412 @ 12"			
BAR G IN 2 SLABS	66 - 401	66 - 401	66 - 401	66 - 401	72 - 401			
BAR H IN 4 WALLS	24 - 402	24 - 402	24 - 402	24 - 402	24 - 402			
BAR J IN EXT. CORNER	0	0	0	3-409B @ 6½"	3-413B @ 7"			
BAR J IN INT. CORNER	0	3-404B @ 5"	4-407B @ 5¾"	4-410B @ 6½"	4-414B @ 7"			
T_1	8"	9"	10"	11"	12"			
T_2	9"	10"	11"	12"	13"			
T_3	8"	9"	10"	11"	12"			
X	21'-4"	21'-6"	21'-8"	21'-10"	22'-0"			
Y	5'-5"	5'-7"	5'-9"	5'-11"	6'-1"			
YD³ CLASS AA CONCRETE/FT	1.641	1.807	1.975	2.146	2.318			
LB BAR REINF STEEL/FT	215.0	258.3	293.1	311.2	404.1			
PARAPET, BARREL END, AND TOEWALL QUANTITIES - 90° SKEW - TOTAL								
YD³ CLASS AA CONCRETE	8.5	8.7	8.8	9.0	9.1			
LB BAR REINF STEEL	1268	1268	1267	1267	1323			
PARAPET, BARREL END, AND TOEWALL QUANTITIES - 75° SKEW - TOTAL								
YD³ CLASS AA CONCRETE	8.9	9.0	9.2	9.3	9.5			
LB BAR REINF STEEL	1575	1576	1578	1580	1638			
PARAPET, BARREL END, AND TOEWALL QUANTITIES - 60° SKEW - TOTAL								
YD³ CLASS AA CONCRETE	9.9	10.1	10.2	10.4	10.6			
LB BAR REINF STEEL	1668	1670	1673	1675	1734			
PARAPET, BARREL END, AND TOEWALL QUANTITIES - 45° SKEW - TOTAL								
YD³ CLASS AA CONCRETE	12.2	12.4	12.6	12.8	13.0			
LB BAR REINF STEEL	1892	1896	1900	1904	1964			

DEPARTMENT OF TRANSPORTATION
STATE OF GEORGIA
STANDARD
REINFORCED CONCRETE TRIPLE BOX CULVERT 6'X3' AND 6'X4'
NO SCALE SEPTEMBER 2017
DATE / REVISION / BY
DES. YSK DRW. FGS TRA. CHK. JWB (SUBMITTED) STATE DESIGN POLICY ENGINEER (APPROVED) Margaret B Pirkle CHIEF ENGINEER
NUMBER 2403 SHEET 2-D OF 3

STATE	PROJECT NUMBER	SHEET NO.	TOTAL SHEETS
GA.			

CULVERT SIZE		DESIGN I-A 2 FT. MINIMUM COVER					DESIGN I-B 3 FT. MINIMUM COVER					CULVERT SIZE	
CLEAR SPAN (FT.)	CLEAR HEIGHT (FT.)	T (INCHES)	MINIMUM AREAS OF CIRCUMFERENTIAL REINFORCING STEEL (SQ.IN.PER LIN.FT.)			MAXIMUM FILL HEIGHTS (FEET)	MINIMUM AREA OF CIRCUMFERENTIAL REINFORCING STEEL (SQ. IN. PER LIN.FT.)			MAXIMUM FILL HEIGHTS (FEET)	T (INCHES)	CLEAR HEIGHT (FT.)	CLEAR SPAN (FT.)
S	H		A_{S1}	A_{S2}	A_{S4}		A_{S1}	A_{S2}	A_{S4}			H	S
4'	3	6	0.21	0.27	0.12	16	0.13	0.18	0.12	10	6	3	4'
	4	6	0.18	0.30	0.12	16	0.12	0.19	0.12	10	6	4	
	5	6	0.24	0.33	0.14	16	0.15	0.23	0.14	10	6	5	
	6	7	0.27	0.37	0.17	16	0.20	0.27	0.17	10	7	6	
5'	3	6	0.26	0.29	0.14	16	0.17	0.21	0.14	10	6	3	5'
	4	6	0.24	0.33	0.14	16	0.16	0.23	0.14	10	6	4	
	5	6	0.20	0.35	0.14	16	0.14	0.25	0.14	10	6	5	
	6	7	0.25	0.39	0.17	16	0.18	0.29	0.17	10	7	6	
6'	3	7	0.32	0.33	0.17	16	0.23	0.23	0.17	10	7	3	6'
	4	7	0.27	0.37	0.17	16	0.20	0.27	0.17	10	7	4	
	5	7	0.25	0.39	0.17	16	0.18	0.29	0.17	10	7	5	
	6	7	0.23	0.41	0.17	16	0.17	0.30	0.17	10	7	6	
7'	4	8	0.35	0.41	0.19	16	0.25	0.27	0.19	10	8	4	7'
	5	8	0.31	0.44	0.19	16	0.23	0.29	0.19	10	8	5	
	6	8	0.28	0.42	0.19	14	0.21	0.34	0.19	10	8	6	
	7	8	0.26	0.44	0.19	14	0.19	0.36	0.19	10	8	7	
8'	4	8	0.43	0.40	0.19	10	0.33	0.30	0.19	8	8	4	8'
	5	8	0.38	0.43	0.19	10	0.30	0.33	0.19	8	8	5	
	6	8	0.35	0.47	0.19	10	0.27	0.35	0.19	8	8	6	
	7	8	0.33	0.50	0.19	10	0.25	0.38	0.19	8	8	7	
	8	8	0.31	0.53	0.19	10	0.24	0.43	0.19	8	8	8	
9'	4	9	0.47	0.45	0.22	10	0.38	0.38	0.22	8	9	4	9'
	5	9	0.43	0.45	0.22	10	0.35	0.39	0.22	8	9	5	
	6	9	0.40	0.48	0.22	10	0.32	0.42	0.22	8	9	6	
	7	9	0.37	0.52	0.22	10	0.30	0.45	0.22	8	9	7	
	8	9	0.35	0.54	0.22	10	0.28	0.47	0.22	8	9	8	
	9	9	0.33	0.57	0.22	10	0.27	0.49	0.22	8	9	9	
	10	10	0.35	0.61	0.24	10	0.30	0.55	0.24	8	10	10	
10'	4	10	0.50	0.46	0.24	10	0.44	0.42	0.24	8	10	4	10'
	5	10	0.47	0.46	0.24	10	0.41	0.42	0.24	8	10	5	
	6	10	0.44	0.50	0.24	10	0.38	0.45	0.24	8	10	6	
	7	10	0.41	0.53	0.24	10	0.35	0.48	0.24	8	10	7	
	8	10	0.38	0.56	0.24	10	0.33	0.51	0.24	8	10	8	
	9	10	0.36	0.60	0.24	10	0.32	0.53	0.24	8	10	9	
	10	10	0.35	0.61	0.24	10	0.30	0.55	0.24	8	10	10	

CONNECTOR BOX TYPE C
(USE FOR CONNECTION TO CAST-IN-PLACE)

CONNECTOR BOX TYPE P
(USE FOR CONNECTION TO PRECAST ENDS)

MINIMUM TRENCH DEPTH = 0.3 Bc + BEDDING DEPTH

- 6" MIN. DEPTH OF FOUNDATION BACKFILL MATERIAL TYPE II FOR WET AREAS OR 3" MIN. DEPTH FOUNDATION BACKFILL MATERIAL TYPE I OTHERWISE. TYPE I AND II MATERIAL BOTH MAY BE USED IF SPECIFIED. CLASS I SOIL SHALL BE REQUIRED FOR TYPE I BACKFILL MATERIAL.

- NORMAL BACKFILL COMPACTED IN 6" LAYERS BROUGHT UP EVENLY ON BOTH SIDES OF CULVERT FROM TOP OF BEDDING TO MINIMUM REQUIRED COVER.

⊗ FOR AN INCOMPRESSIBLE FOUNDATION, INCREASE TRENCH UNDER BOX TO 12" MINIMUM. WHERE AN UNSTABLE MATERIAL IS ENCOUNTERED, ADDITIONAL EXCAVATION AND BACKFILLING TO DEPTHS AND WIDTHS SPECIFIED BY THE ENGINEER IS REQUIRED.

TYPICAL FILLERS	
MATERIALS ALTERNATES	SPACE "X"
GROUT	2" ±
CL. B CONC.	4" ±

NOTE: PAYMENT FOR CULVERT INCLUDES FILLER.

THE DIMENSION "X" SHALL BE COMPATIBLE WITH CULVERT END TREATMENT AND APRON WIDTHS. SPACERS SHALL BE USED BETWEEN BOXES IF BACKFILLED BEFORE FILLER SETS UP.

NOTE:
A CULVERT COMBINATION HAVING A TOTAL CLEAR SPAN & HEIGHT EQUAL TO OR EXCEEDING THAT SPECIFIED MAY BE SUBSTITUTED. EXAMPLE: A TRIPLE 6'x6' MAY BE SUBSTITUTED FOR A DOUBLE 9'x6' OR VICE VERSA.

GENERAL NOTES:

1. SPECIFICATIONS: GA. STANDARD, CURRENT EDITION, AND SUPPLEMENTS THERETO. CONCRETE SHALL CONFORM TO SECTION 843, 5000 P.S.I. MINIMUM.
2. REINFORCING REQUIREMENTS NOT SHOWN SHALL BE ACCORDING TO A.A.S.H.T.O. M-259, MINIMUM CLEARANCE FOR CIRCUMFERENTIAL REINFORCMENT SHALL BE 1INCH, WITH LESS THAN 1INCH OF CLEARANCE BEING CAUSE FOR REJECTION.
3. ALL JOINTS BETWEEN PRECAST SECTIONS SHALL BE TONGUE & GROOVE WITH JOINT MATERIAL. JOINTS BETWEEN CAST-IN-PLACE AND PRECAST SECTIONS SHALL HAVE LONGITUDINAL STEEL EXTENDING FROM TOP, BOTTOM AND BOTH SIDE SLABS OF THE PRECAST BOX TIED TO THE CAST-IN-PLACE REINFORCEMENT.
4. CULVERTS LARGER THAN THE SPECIFIED SIZE MAY BE SUBSTITUTED WITH PAYMENT BEING BASED UPON THE SPECIFIED SIZE RATHER THAN THE SUBSTITUTION. SUCH A SUBSTITUTION MUST BE APPROVED BY THE ENGINEER. MINIMUM COVER MUST BE RETAINED AND NO ADVERSE EFFECTS PRODUCED.
5. ALTERNATES: CAST-IN-PLACE BOX CULVERTS OR OTHER APPROVED PRECAST DESIGNS.
6. LOADING: HS-20 AND ANY FILL HEIGHTS BETWEEN THE MINIMUM AND MAXIMUM SHOWN.
7. ONLY ONE DESIGN OF PRECAST BOX CULVERT IS TO BE USED FOR ANY INSTALLATION.

DEPARTMENT OF TRANSPORTATION
STATE OF GEORGIA
STANDARD
PRECAST BOX CULVERT BARRELS 4'x3' THRU 10'x10' SINGLE & MULTIPLE LINES
NOT TO SCALE REDRAWN JULY 2024 MAR. 1985
6-27-85 DATE / MADE 4" JT. DEPTH MIN REVISION / R.M.U. BY
DES. R.M.U. DRW. R.M.U. TRA. G.M.E. CHK. R.K.C. (SUBMITTED) Floyd E. Hardy STATE ROAD & AIRPORT DESIGN ENGR (APPROVED) STATE HIGHWAY ENGINEER
NUMBER 2530P

MARK	LENGTH	TYPE
401	L* - 4"	1
402	L* + 20"	1
403	4'-0"	1
404	4'-2"	1
405	4'-4"	1
406	4'-6"	1
407	4'-8"	1
408	5'-0"	1
409	5'-2"	1
410	5'-4"	1
411	5'-6"	1
412	5'-8"	1
413	5'-10"	1
414	6'-0"	1
415	6'-2"	1
416	6'-4"	1
417	6'-5"	1
418	6'-6"	1
419	6'-8"	1
420	6'-10"	1
421	7'-0"	1
422	7'-2"	1
423	7'-4"	1
424	7'-5"	1
425	7'-6"	1
426	7'-8"	1
427	7'-10"	1
428	8'-0"	1
429	8'-2"	1
430	8'-4"	1
431	8'-6"	1
432	8'-7"	1
433	8'-8"	1
434	8'-9"	1
435	8'-10"	1
436	8'-11"	1
437	9'-0"	1
438	9'-1"	1
439	9'-2"	1
440	9'-4"	1
441	9'-6"	1
442	9'-8"	1
443	9'-10"	1
444	10'-0"	1
445	10'-2"	1
446	10'-3"	1
447	10'-4"	1
448	10'-6"	1
449	10'-8"	1
450	10'-10"	1
451	11'-0"	1
452	11'-2"	1
453	11'-4"	1
454	11'-6"	1
455	11'-8"	1
456	11'-10"	1
457	12'-0"	1
458	12'-1"	1
459	12'-2"	1
460	12'-4"	1
461	12'-6"	1
462	12'-7"	1
463	12'-8"	1
464	13'-0"	1
465	13'-3"	1
466	13'-4"	1
467	13'-8"	1
468	13'-10"	1
469	13'-11"	1
470	14'-0"	1
471	14'-4"	1
472	14'-5"	1
473	14'-8"	1
474	15'-0"	1
475	15'-1"	1
476	15'-4"	1

MARK	LENGTH	TYPE
477	15'-5"	1
478	16'-2"	1
479	16'-8"	1
480	17'-2"	1
481	17'-8"	1
482	17'-10"	1
483	18'-6"	1
484	19'-2"	1
485	19'-6"	1
486	19'-10"	1
487	20'-0"	1
488	20'-2"	1
489	20'-10"	1
490	21'-4"	1
491	21'-11"	1
492	22'-2"	1
493	22'-4"	1
494	22'-6"	1
495	25'-0"	1
496	25'-2"	1
501	4'-0"	1
502	5'-0"	1
503	5'-2"	1
504	5'-4"	1
505	5'-5"	1
506	5'-8"	1
507	6'-0"	1
508	6'-2"	1
509	6'-5"	1
510	6'-6"	1
511	6'-8"	1
512	7'-0"	1
513	7'-2"	1
514	7'-4"	1
515	7'-6"	1
516	7'-7"	1
517	7'-8"	1
518	8'-0"	1
519	8'-2"	1
520	8'-4"	1
521	8'-5"	1
522	8'-6"	1
523	8'-7"	1
524	8'-8"	1
525	8'-10"	1
526	8'-11"	1
527	9'-0"	1
528	9'-2"	1
529	9'-4"	1
530	9'-6"	1
531	9'-8"	1
532	9'-9"	1
533	9'-10"	1
534	10'-0"	1
535	10'-2"	1
536	10'-3"	1
537	10'-4"	1
538	10'-7"	1
539	10'-8"	1
540	10'-9"	1
541	10'-10"	1
542	10'-11"	1
543	11'-0"	1
544	11'-1"	1
545	11'-2"	1
546	11'-3"	1
547	11'-4"	1
548	11'-6"	1
549	11'-7"	1
550	11'-8"	1
551	11'-10"	1
552	11'-11"	1
553	12'-0"	1
554	12'-1"	1
555	12'-2"	1

MARK	LENGTH	TYPE
556	12'-4"	1
557	12'-6"	1
558	12'-8"	1
559	13'-0"	1
560	13'-2"	1
561	13'-4"	1
562	13'-5"	1
563	13'-6"	1
564	13'-11"	1
565	14'-0"	1
566	14'-1"	1
567	14'-2"	1
568	14'-4"	1
569	14'-5"	1
570	14'-7"	1
571	14'-8"	1
572	14'-9"	1
573	14'-10"	1
574	15'-10"	1
575	16'-6"	1
576	17'-0"	1
577	17'-2"	1
578	17'-4"	1
579	17'-6"	1
580	18'-5"	1
581	18'-11"	1
582	19'-5"	1
583	19'-6"	1
584	19'-10"	1
585	20'-8"	1
586	21'-0"	1
587	21'-2"	1
588	21'-6"	1
589	22'-0"	1
590	22'-2"	1
591	22'-4"	1
592	23'-6"	1
593	24'-0"	1
594	24'-4"	1
595	24'-8"	1
596	24'-10"	1
597	25'-0"	1
601	7'-8"	1
602	8'-4"	1
603	8'-8"	1
604	8'-9"	1
605	9'-11"	1
606	10'-0"	1
607	10'-7"	1
608	11'-0"	1
609	11'-1"	1
610	11'-2"	1
611	12'-2"	1
612	12'-4"	1
613	12'-6"	1
614	12'-7"	1
615	13'-3"	1
616	13'-11"	1
617	14'-0"	1
618	14'-3"	1
619	15'-6"	1
620	15'-10"	1
621	16'-0"	1
622	16'-4"	1
623	16'-6"	1
624	16'-10"	1
625	16'-11"	1
626	17'-2"	1
627	17'-5"	1
628	17'-8"	1
629	18'-5"	1
630	18'-6"	1
631	19'-0"	1
632	19'-1"	1
633	19'-2"	1

MARK	LENGTH	TYPE
634	19'-4"	1
635	19'-6"	1
636	19'-8"	1
637	19'-10"	1
638	20'-1"	1
639	20'-4"	1
640	20'-7"	1
641	20'-8"	1
642	20'-10"	1
643	21'-0"	1
644	21'-4"	1
645	21'-6"	1
646	21'-11"	1
647	22'-0"	1
648	22'-2"	1
649	22'-10"	1
650	23'-0"	1
651	23'-4"	1
652	23'-6"	1
653	23'-8"	1
654	23'-10"	1
655	24'-6"	1
656	24'-8"	1
657	24'-10"	1
701	7'-4"	1
702	7'-8"	1
703	8'-5"	1
704	9'-2"	1
705	9'-8"	1
706	9'-9"	1
707	10'-8"	1
708	10'-10"	1
709	10'-11"	1
710	11'-2"	1
711	11'-8"	1
712	11'-10"	1
713	12'-4"	1
714	12'-6"	1
715	14'-4"	1
716	15'-0"	1
717	15'-4"	1
718	17'-2"	1
719	18'-0"	1
720	18'-5"	1
721	18'-11"	1
722	19'-1"	1
723	19'-2"	1
724	20'-4"	1
725	21'-0"	1
726	21'-2"	1
727	21'-6"	1
728	21'-8"	1
729	21'-10"	1
730	22'-0"	1
731	22'-2"	1
732	22'-6"	1
733	23'-0"	1
734	23'-4"	1
735	23'-8"	1
736	23-10"	1
737	24'-0"	1
738	24'-2"	1
739	24'-4"	1
740	24'-6"	1
741	24'-10"	1

MARK	LENGTH	TYPE	A	B
401A	4'-2"	3	1'-7"	2'-7"
402A	4'-3"	3	1'-8"	2'-7"
403A	4'-4"	3	1'-8	2'-8"
404A	4'-4"	3	1'-9"	2'-7"
405A	4'-5"	3	1'-9"	2'-8"
406A	4'-6"	3	1'-10"	2'-8"
407A	4'-7"	3	1'-10"	2'-9"
408A	4'-9"	3	2'-0"	2'-9"
409A	4'-9"	3	2'-2"	2'-7"
410A	5'-0"	3	2'-2"	2'-10"
411A	5'-4"	3	1'-9"	3'-7"
412A	5'-5"	3	1'-9"	3'-8"
413A	5'-6"	3	1'-10"	3'-8"
414A	5'-7"	3	1'-11"	3'-8"
415A	5'-8"	3	1'-11"	3'-9"
416A	5'-8"	3	2'-1"	3'-7"
417A	5'-9"	3	2'-0"	3'-9"
418A	6'-0"	3	2'-2"	3'-10"
419A	6'-0"	3	2'-4"	3'-8"
420A	6'-1"	3	2'-3"	3'-10"
421A	6'-6"	3	1'-11"	4'-7"
422A	6'-7"	3	2'-0"	4'-7"
423A	6'-7"	3	2'-7"	4'-0"
424A	6'-8"	3	2'-0"	4'-8"
425A	6'-9"	3	2'-0"	4'-9"
426A	6'-9"	3	2'-1"	4'-8"
427A	6'-9"	3	2'-8"	4'-1"
428A	6'-10"	3	2'-1"	4'-9"
429A	6'-10"	3	2'-3"	4'-7"
430A	6'-11"	3	2'-2"	4'-9"
431A	7'-0"	3	2'-4"	4'-8"
432A	7'-0"	3	2'-5"	4'-7"
433A	7'-1"	3	2'-3"	4'-10"
434A	7'-2"	3	3'-0"	4'-2"
435A	7'-6"	3	3'-3"	4'-3"
436A	7'-7"	3	2'-7"	5'-0"
437A	7'-7"	3	3'-6"	4'-1"
438A	7'-9"	3	2'-2"	5'-7"
439A	7'-10"	3	2'-2"	5'-8"
440A	7'-10"	3	2'-3"	5'-7"
441A	7'-10"	3	2'-9"	5'-1"
442A	8'-0"	3	2'-3"	5'-9"
443A	8'-1"	3	2'-4"	5'-9"
444A	8'-1"	3	2'-6"	5'-7"
445A	8'-2"	3	3'-0"	5'-2"
446A	8'-3"	3	2'-5"	5'-10"
447A	8'-3"	3	2'-8"	5'-7"
448A	8'-4"	3	2'-8"	5'-8"
449A	8'-6"	3	3'-3"	5'-3"
450A	8'-6"	3	3'-5"	5'-1"
451A	8'-9"	3	2'-9"	6'-0"
452A	8'-11"	3	2'-10"	6'-1"
453A	9'-1"	3	2'-5"	6'-8"
454A	9'-1"	3	2'-6"	6'-7"
455A	9'-3"	3	2'-6"	6'-9"
456A	9'-3"	3	3'-1"	6'-2"
457A	9'-4"	3	2'-8"	6'-8"
458A	9'-5"	3	3'-2"	6'-3"
459A	9'-5"	3	3'-4"	6'-1"
460A	9'-7"	3	3'-4"	6'-3"
461A	9'-9"	3	3'-1"	6'-8"
462A	9'-10"	3	2'-10"	7'-0"
463A	9'-10"	3	3'-3"	6'-7"
464A	10'-1"	3	3'-0"	7'-1"
465A	10'-4"	3	3'-2"	7'-2"
466A	10'-6"	3	2'-11"	7'-7"
467A	10'-7"	3	2'-10"	7'-9"
468A	10'-7"	3	2'-11"	7'-8"
469A	10'-8"	3	3'-5"	7'-3"
470A	11'-1"	3	3'-1"	8'-0"
471A	11'-5"	3	3'-9"	7'-8"
472A	11'-7"	3	3'-5"	8'-2"
473A	11'-10"	3	3'-7"	8'-3"
474A	12'-4"	3	3'-4"	9'-0"
475A	12'-9"	3	3'-7"	9'-2"
476A	13'-0"	3	3'-9"	9'-3"

MARK	LENGTH	TYPE	A	B
477A	13'-5"	3	4'-4"	9'-1"
478A	13'-9"	3	3'-10"	9'-11"
479A	14'-0"	3	3'-10"	10'-2"
480A	14'-3"	3	4'-0"	10'-3"
481A	16'-10"	3	4'-9"	12'-1"
482A	18'-1"	3	7'-0"	11'-1"
501A	4'-4"	3	1'-9"	2'-7"
502A	4'-8"	3	2'-1"	2'-7"
503A	5'-3"	3	2'-4"	2'-11"
504A	5'-6"	3	1'-11"	3'-7"
505A	5'-8"	3	2'-1"	3'-7"
506A	6'-3"	3	2'-4"	3'-11"
507A	6'-7"	3	2'-7"	4'-0"
508A	6'-9"	3	2'-2"	4'-7"
509A	6'-10"	3	2'-11"	3'-11"
510A	7'-1"	3	2'-6"	4'-7"
511A	7'-1"	3	2'-11"	4'-2"
512A	7'-3"	3	2'-4"	4'-11"
513A	7'-4"	3	3'-3"	4'-1"
514A	7'-6"	3	3'-3"	4'-3"
515A	7'-7"	3	2'-7"	5'-0"
516A	7'-7"	3	3'-3"	4'-4"
517A	7'-9"	3	2'-10"	4'-11"
518A	7'-11"	3	3'-6"	4'-5"
519A	8'-0"	3	2'-4"	5'-8"
520A	8'-0"	3	2'-5"	5'-7"
521A	8'-1"	3	2'-5"	5'-8"
522A	8'-1"	3	2'-11"	5'-2"
523A	8'-3"	3	2'-6"	5'-9"
524A	8'-4"	3	3'-3"	5'-1"
525A	8'-4"	3	3'-9"	4'-7"
526A	8'-5"	3	2'-6"	5'-11"
527A	8'-5"	3	3'-2"	5'-3"
528A	8'-7"	3	3'-0"	5'-7"
529A	8'-7"	3	3'-3"	5'-4"
530A	8'-11"	3	3'-0"	5'-11"
531A	8'-11"	3	3'-6"	5'-5"
532A	9'-0"	3	3'-7"	5'-5"
533A	9'-2"	3	3'-0"	6'-2"
534A	9'-3"	3	3'-2"	6'-1"
535A	9'-3"	3	3'-3"	6'-0"
536A	9'-4"	3	2'-7"	6'-9"
537A	9'-5"	3	2'-9"	6'-8"
538A	9'-5"	3	3'-10"	5'-7"
539A	9'-6"	3	2'-8"	6'-10"
540A	9'-6"	3	2'-9"	6'-9"
541A	9'-6"	3	3'-3"	6'-3"
542A	9'-7"	3	2'-8"	6'-11"
543A	9'-8"	3	3'-4"	6'-4"
544A	9'-9"	3	2'-10"	6'-11"
545A	10'-0"	3	3'-7"	6'-5"
546A	10'-3"	3	3'-2"	7'-1"
547A	10'-3"	3	3'-3"	7'-0"
548A	10'-4"	3	3'-2"	7'-2"
549A	10'-4"	3	3'-5"	6-11"
550A	10'-5"	3	3'-10"	6'-7"
551A	10'-7"	3	3'-0"	7'-7"
552A	10'-7"	3	3'-4"	7'-3"
553A	10'-7"	3	3'-6"	7'-1"
554A	10'-8"	3	2'-10"	7'-10"
555A	10'-8"	3	2'-11"	7'-9"
556A	10'-8"	3	3'-0"	7'-8"
557A	10'-9"	3	3'-5"	7'-4"
558A	10'-10"	3	3'-0"	7'-10"
559A	10'-11"	3	3'-0"	7'-11"
560A	10'-11"	3	4'-2"	6'-9"
561A	11'-1"	3	3'-2"	7'-11"
562A	11'-1"	3	3'-8"	7'-5"
563A	11'-3"	3	3'-8"	7'-7"
564A	11'-6"	3	3'-5"	8'-1"
565A	11'-6"	3	3'-11"	7'-7"
566A	11'-7"	3	3'-5"	8'-2"
567A	11'-10"	3	3'-7"	8'-3"
568A	11'-10"	3	3'-11"	7'-11"
569A	11'-11"	3	3'-7"	8'-4"

MARK	LENGTH	TYPE	A	B
570A	12'-0"	3	3'-11"	8'-1"
571A	12'-0"	3	4'-3"	7'-9"
572A	12'-3"	3	3'-10"	8'-5"
573A	12'-6"	3	3'-5"	9'-1"
574A	12'-8"	3	4'-1"	8'-7"
575A	13'-0"	3	3'-10"	9'-2"
576A	13'-2"	3	4'-5"	8'-9"
577A	13'-3"	3	3'-11"	9'-4"
578A	13'-7"	3	4'-6"	9'-1"
579A	13'-10"	3	3'-9"	10'-1"
580A	13'-10"	3	4'-3"	9'-7"
581A	14'-2"	3	3'-11"	10'-3"
582A	14'-4"	3	4'-3"	10'-1"
583A	14'-6"	3	4'-2"	10'-4"
584A	14'-7"	3	4'-2"	10'-5"
585A	14'-8"	3	5'-9"	8'-11"
586A	15'-0"	3	4'-5"	10'-7"
587A	15'-10"	3	4'-5"	11'-5"
588A	16'-7"	3	6'-6"	10'-1"
589A	17'-3"	3	4'-10"	12'-5"
601A	8'-0"	3	3'-7"	4'-5"
602A	8'-10"	3	4'-1"	4'-9"
603A	9'-10"	3	4'-1"	5'-9"
604A	10'-10"	3	3'-2"	7'-8"
605A	10'-11"	3	3'-2"	7'-9"
606A	11'-3"	3	3'-3"	8'-0"
607A	13'-0"	3	3'-9"	9'-3"
608A	13'-4"	3	3'-11"	9'-5"
609A	14'-2"	3	4'-0"	10'-2"
610A	14'-5"	3	4-2"	10'-3"
611A	14'-8"	3	4'-3"	10'-5"
612A	15'-6"	3	4'-9"	10'-9"
613A	16'-9"	3	5'-0"	11'-9"
614A	17'-7"	3	5'-0"	12'-7"
615A	18'-0"	3	5'-3"	12'-9"
701A	7'-10"	3	3'-7"	4'-3"
702A	8'-7"	3	2'-9"	5'-10"
703A	8'-9"	3	3'-6"	5'-3"
704A	10'-5"	3	4'-0"	6'-5"
705A	11'-0"	3	3'-9"	7'-3"
706A	11'-5"	3	3'-4"	8'-1"
707A	11'-6"	3	4'-1"	7'-5"
708A	12'-3"	3	4'-0"	8'-3"
709A	12'-8"	3	4'-3"	8'-5"
710A	13'-6"	3	4'-3"	9'-3"
711A	13'-11"	3	3'-11"	10'-0"
712A	13'-11"	3	4'-6"	9'-5"
713A	16'-0"	3	4'-9"	11'-3"
714A	17'-6"	3	5'-3"	12'-3"
801A	15'-1"	3	5'-4"	9'-9"
802A	17'-2"	3	5'-7"	11'-7"

MARK	LENGTH	TYPE	A	B
401B	3'-1½"	6	1'-1½"	0'-6"
402B	3'-1⅝"	6	1'-1⅝"	0'-6"
403B	3'-3½"	6	1'-1½"	0'-7"
404B	3'-3⅝"	6	1'-1⅝"	0'-7"
405B	3'-3¾"	6	1'-1¾"	0'-7"
406B	3'-5½"	6	1'-1½"	0'-8"
407B	3'-5⅝"	6	1'-1⅝"	0'-8"
408B	3'-5¾"	6	1'-1¾"	0'-8"
409B	3'-7½"	6	1'-1½"	0'-9"
410B	3'-7⅝"	6	1'-1⅝"	0'-9"
411B	3'-7¾"	6	1'-1¾"	0'-9"
412B	3'-7⅞"	6	1'-1⅞"	0'-9"
413B	3'-9⅝"	6	1'-1⅝"	0'-10"
414B	3'-9¾"	6	1'-1¾"	0'-10"
415B	3'-11⅝"	6	1'-1⅝"	0'-11'
416B	3'-11¾"	6	1'-1¾"	0'-11'
417B	4'-1⅝"	6	1'-1⅝"	1'-0"
418B	4'-1¾"	6	1'- 1¾"	1'-0"
419B	4'-3⅝"	6	1'-1⅝"	1'-1"
420B	4'-3¾"	6	1'-1¾"	1'-1"
421B	4'-5⅝"	6	1'-1⅝"	1'-2"
422B	4'-5¾"	6	1'-1¾"	1'-2"
423B	4'-5⅞"	6	1'-1⅞"	1'-2"
424B	4'-7⅝"	6	1'-1⅝"	1'-3"
425B	4'-7¾"	6	1'-1¾"	1'-3"
426B	4'-9⅝"	6	1'-1⅝"	1'-4"
427B	4'-9¾"	6	1'-1¾"	1'-4"
428B	4'-9⅞"	6	1'-1⅞"	1'-4"
429B	5'-1¾"	6	1'-1¾"	1'-6"
430B	5'-1⅞"	6	1'-1⅞"	1'-6"
431B	5'-5¾"	6	1'-1¾"	1'-8"
432B	5'-5⅞"	6	1'-1⅞"	1'-8"

• L = LENGTH OF CULVERT

DEPARTMENT OF TRANSPORTATION
STATE OF GEORGIA
STANDARD
REINFORCED CONCRETE TRIPLE BOX CULVERT
NO SCALE SEPTEMBER 2017
DATE / REVISION / BY
DES. YSK DRW. FGS TRA. CHK. JWB (SUBMITTED) STATE DESIGN POLICY ENGINEER (APPROVED) Margaret B Pirkle CHIEF ENGINEER
NUMBER 2403 SHEET 3 OF 3

A1 STANDARD REINFORCED CONCRETE BOX CULVERTS
SCALE: N.T.S.

US Army Corps of Engineers® Louisville District

TANYA NORMAN, P.E.
P.E. No. 0038055, GA
GEORGIA REGISTERED No. PE038055 PROFESSIONAL ENGINEER TANYA L. NORMAN
DATE: 01/09/2026

MARK	DESCRIPTION	DATE

ISSUE DATE: JANUARY 9, 2026
SOLICITATION NO.:
CONTRACT NO.:
FILE NUMBER: 1230218
DESIGNED BY: T. NORMAN
DRAWN BY: J.P. ARISTIZABAL
CHECKED BY: D.M. LECKIE
SUBMITTED BY: A. DUEHR
SIZE: ANSI D
FILE NAME: C-500.dwg

U.S. ARMY CORPS OF ENGINEERS
LOUISVILLE DISTRICT
LOUISVILLE, KENTUCKY 40210-0059

POND
3500 PARKWAY LANE SUITE 500 PEACHTREE CORNERS, GA 30092 PHONE (678) 336-7740 POND JOB No. 1230218

REPAIR & MAINTAIN AIRFIELD STORMWATER SYSTEM PHASE II
DOBBINS AIR RESERVE BASE, GEORGIA
PROJECT NO.: FGWB 21-0002 & FGWB 25-0006
P2#: 470584

CONSTRUCTION DETAILS

SHEET ID
C-512

CERTIFIED FINAL

FILE PATH: X:\FY23\1230218\04.CAD BIM\04.02.CAD_PH 2 SHEETS\CAD\C-500 PLOTTED: 01/09/2026 BY: NORMAN, TANYA

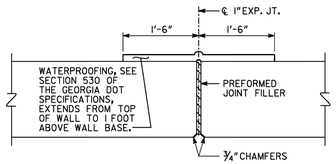

DETAIL OF EXPANSION JOINT

SEE GENERAL NOTE #3

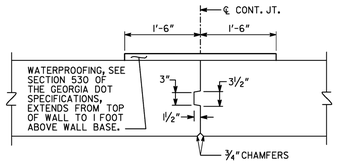

DETAIL OF CONTRACTION JOINT

SEE GENERAL NOTE #3

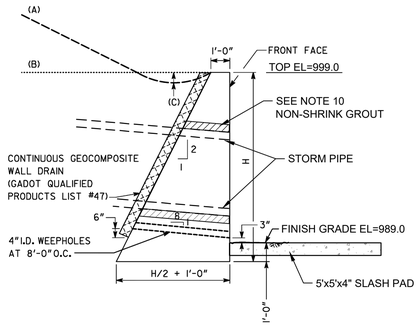

TYPICAL SECTION A

MAXIMUM "H"*			
BACKSLOPE	TYP. SECTION A	TYP. SECTION B **	TYP. SECTION C **
FLAT	8'-6"	10'-0"	10'-0"
SLOPE TO 4H	6'-3"	7'-0"	7'-0"
SLOPE TO 2H	4'-6"	4'-9"	4'-9"

* GREATER "H" PERMITTED IF APPROVED BY BRIDGE DESIGN.

** TYPICAL SECTION B SHALL HAVE A MINIMUM H OF 3'-8"
TYPICAL SECTION C SHALL HAVE A MINIMUM H OF 4'-6"

5' MIN. TO NEAREST JOINT (TYP)

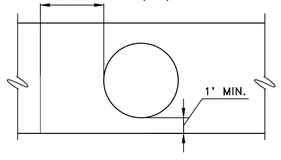

GENERAL NOTES:

1. GRAVITY WALLS SHALL NOT BE USED WHEN HORIZONTAL DISTANCE FROM EDGE OF TRAVEL WAY TO FRONT FACE OF WALL IS LESS THAN (H + 1'0").
2. GRAVITY WALLS DESIGNED FOR THE FOLLOWING SOIL PROPERTIES:

	FOUNDATION	BACKFILL
COHESION =	0 PSF	0 PSF
Φ =	28°	28°
UNIT WEIGHT =	120 PCF	120 PCF

3. EXPANSION JOINTS SHALL BE LOCATED AT A MAXIMUM SPACING OF 90'-0" AND EXTEND THROUGH THE WALL. CONTRACTION JOINTS SHALL BE LOCATED AT A MAXIMUM SPACING OF 30'- 0".
4. GRAVITY WALLS WITH A VERTICAL FRONT FACE SHALL BE PAID FOR AS "CLASS B CONCRETE OR MORTAR RUBBLE MASONRY, RETAINING WALL". GRAVITY WALLS WITH A BARRIER FRONT FACE SHALL BE PAID FOR AS "CLASS A CONCRETE, RETAINING WALL". WATERPROOFING, JOINT FILLER, WALL DRAIN,AND OTHER INCIDENTAL ITEMS SHALL BE INCLUDED IN OVERALL BID SUBMITTED.
5. A CONCRETE DITCH DETAIL FOR THE TOP OF THE WALL SHOULD BE INCLUDED IN THE ROADWAY PLANS WHEN WATER IS FLOWING TOWARDS THE BACK OF THE WALL. SEE CONSTRUCTION DETAIL D-49.
6. FINISH EXPOSED SURFACES OF THE WALL WITH A TYPE III FINISH.
7. APPLY GRAFFITI PROOF COATING AS PER SECTIONS 500 AND 838 OF THE GEORGIA DOT SPECIFICATIONS.
8. ALL NECESSARY FENCE AND HANDRAIL SHOULD BE INCLUDED IN THE ROADWAY PLANS WHEN APPROPRIATE.
9. GRAVITY WALL TYPICAL SECTIONS A, B, AND C HAVE BEEN DESIGNED PER THE AASHTO LRFD BRIDGE DESIGN SPECIFICATIONS, 7TH EDITION, 2014.
10. MAXIMUM OPENING SHALL BE THE PIPE OUTSIDE DIAMETER PLUS 6". MORTAR USED TO SEAL THE PIPE OPENING WILL BE SUCH MIX THAT SHRINKAGE WILL NOT CAUSE LEAKAGE.

A1 GRAVITY WALL

NO SCALE (GDOT)

US Army Corps of Engineers®
Louisville District

TANYA NORMAN, P.E.
P.E. No. 0038055, GA

GEORGIA REGISTERED No. PE038055 PROFESSIONAL ENGINEER TANYA L. NORMAN

DATE: 01/09/2026

MARK	DESCRIPTION	DATE

DESIGNED BY: T. NORMAN
DRAWN BY: J.P. ARISTIZABAL
CHECKED BY: D.M. LECKIE
SUBMITTED BY: A. DUEHR
SIZE: ANSI D
ISSUE DATE: JANUARY 9, 2026
SOLICITATION NO.:
CONTRACT NO.:
FILE NUMBER: 1223026
FILE NAME: C-500.dwg

U.S. ARMY CORPS OF ENGINEERS
LOUISVILLE DISTRICT
LOUISVILLE, KENTUCKY 40210-0059

POND
3055 PEACHTREE INDUSTRIAL BLVD. SUITE 500 DULUTH, GEORGIA GA 30096
PHONE (678) 336-2743
PHONE (678) 336-2745

REPAIR & MAINTAIN AIRFIELD STORMWATER SYSTEM
PHASE II
DOBBINS AIR RESERVE BASE, GEORGIA
PROJECT NO.: FGWB 21-0002 & FGWB 25-0006
P2#: 470584

CONSTRUCTION DETAILS

SHEET ID

C-513

CERTIFIED FINAL

FILE PATH: X:\FY23\123021804.CAD BIM\04.02.CAD_PH 2 SHEETS\CAD\C-500 PLOTTED: 01/09/2026 BY: NORMAN, TANYA

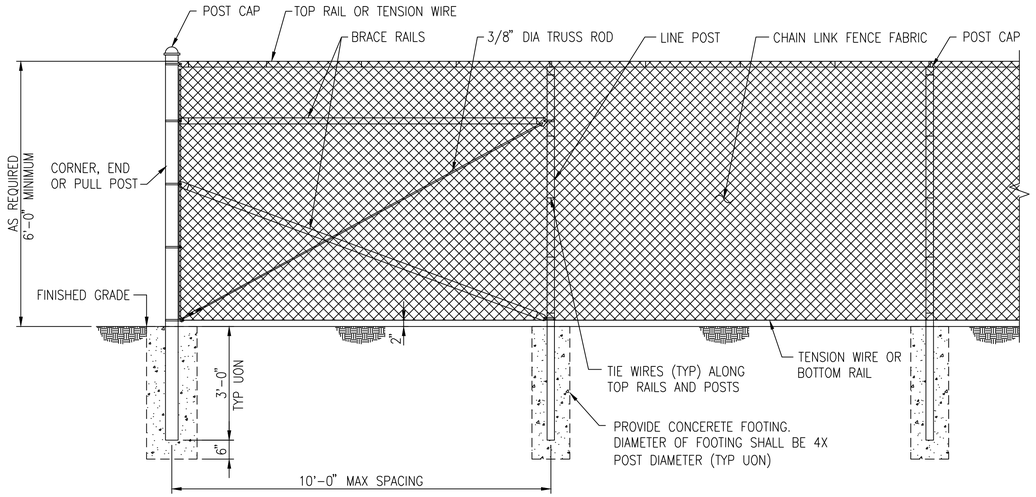

TYPICAL FENCE AND CORNER PANEL ELEVATION

SCALE: 1" = 1'-0"

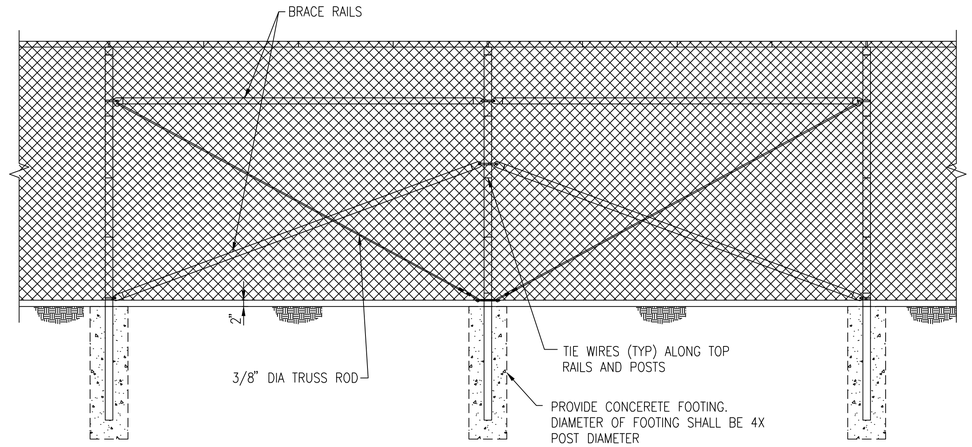

TYPICAL FENCE AND BRACED PANEL ELEVATION

SCALE: 1" = 1'-0"

NOTE (1): A BOTTOM RAIL CAN BE ADDED FOR SECURITY, IT SHALL BE INSTALLED APPROX 3" ABOVE GRADE (A MINIMUM OF 2" AND A MAXIMUM OF 4"). HARDWARE SHALL BE WELDED OR SHOT NAILED TO POSTS AND RAILS IN ORDER TO SECURE IN PLACE. ATTACH FABRIC TO NEW BOTTOM RAIL TO ELIMINATE POSSIBILITY OF PEELING UP FABRIC.

NOTE (2): SOME LOCATIONS MAY REQUIRE 8' OF FABRIC.

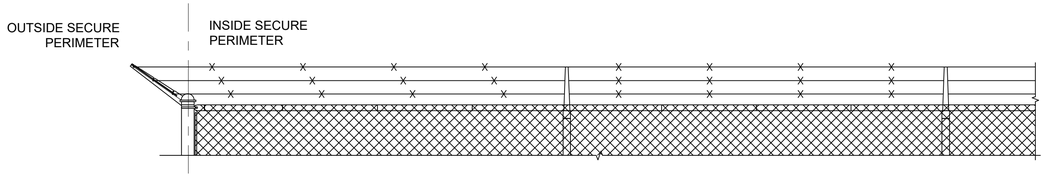

TYPICAL 3 STRAND BARBED WIRE AND SINGLE EXTENSION ARM CONFIGURATION

SCALE: 1" = 1'-0"

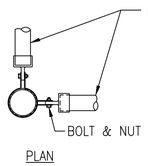

PLAN

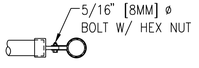

PLAN – ROUND POST

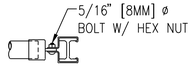

PLAN – "H" POST

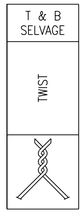

PLAN – ROUND POST

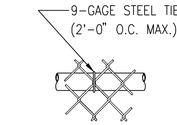

ELEVATION
TOP OR BRACE RAIL ATTACHMENT

PLAN – "H" POST

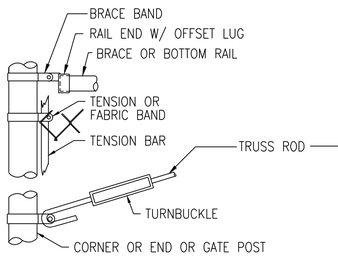

ELEVATION

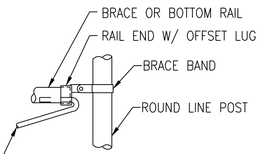

ELEVATION – ROUND POST

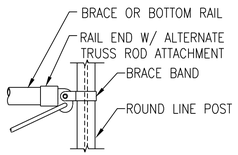

ELEVATION – "H" POST

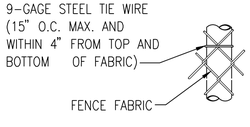

ELEVATION – ROUND POST

FITTINGS NOTES
1. METRIC DIMENSIONS ARE NOMINAL EQUIVALENTS TO U.S. DIMENSIONS.
2. ALL FITTINGS MATERIAL SHALL BE AS SPECIFIED.

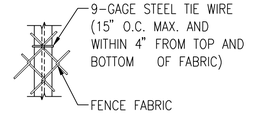

ELEVATION – "H" POST

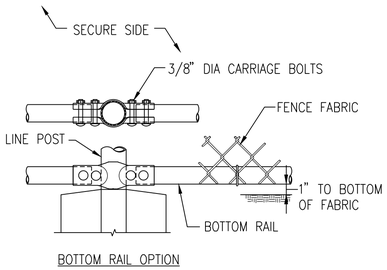

BOTTOM RAIL OPTION

LINE POST DETAILS

SCALE: 1 1/2" = 1'-0"

CORNER OR END POSTS

SCALE: 1 1/2" = 1'-0"

A1 CHAIN-LINK HIGH SECURITY FENCE

NO SCALE

GRAPHIC SCALES

1" = 1'-0" — 0, 6", 1', 2'

1 1/2" = 1'-0" — 0, 4", 8", 1'-4"

US Army Corps of Engineers®
Louisville District

TANYA NORMAN, P.E.
P.E. No. 0038055, GA

GEORGIA REGISTERED No. PE038055 PROFESSIONAL ENGINEER TANYA L. NORMAN

DATE: 01/09/2026

MARK	DESCRIPTION	DATE

ISSUE DATE: JANUARY 9, 2026
SOLICITATION NO.:
CONTRACT NO.:
FILE NUMBER: 1230216

DESIGNED BY: T. NORMAN
DRAWN BY: J.P. ARISTIZABAL
CHECKED BY: D.M. LECKIE
SUBMITTED BY: A. OLIVER
SIZE: ANSI D
FILE NAME: C-500.dwg

U.S. ARMY CORPS OF ENGINEERS
LOUISVILLE DISTRICT
LOUISVILLE, KENTUCKY 40210-0059

POND
3300 BUCKMAN LANE
SUITE 200 NORCROSS, GEORGIA 30092
PHONE (678) 580-7215
POND & COMPANY, CERTIFICATE OF AUTHORIZATION NO. COA 1579

REPAIR & MAINTAIN AIRFIELD STORMWATER SYSTEM
PHASE II
DOBBINS AIR RESERVE BASE, GEORGIA
PROJECT NO.: FGWB 21-0002 & FGWB 25-0006
P2#: 470584

CONSTRUCTION DETAILS

SHEET ID
C-514

CERTIFIED FINAL

FILE PATH: X:\FY23\123021604.CAD BIM\04.02.CAD_PH 2 SHEETS\CAD\C-500 PLOTTED: 01/09/2026 BY: NORMAN, TANYA

STRUCTURE TABLE C-104

STRUCTURE NAME	STRUCTURE TYPE	STRUCTURE DETAIL	OPPOSITE STURCTURES & PIPE SLOPES
S-50	ABANDON DI (2'x3')	RIM = 1017.22' INV OUT = 1013.20' (SE)	S-51 2.2%
S-51	ABANDON DI (2'x3')	RIM = 1017.24' INV IN = 1011.80' (NW) INV OUT = 1011.40' (E)	S-50 2.2% S-52 1.3%
S-52	HW REMOVE EXISTING HEADWALL	INV IN = 1009.00' (W)	S-51 1.3%
S-53	DI (2'x3')	RIM = 1032.62' INV OUT = 1026.30' (N)	S-54 1.8%
S-54	HW	INV IN = 1024.90' (S)	S-53 1.8%
S-100	DI (2'x3')	RIM = 1026.89' INV OUT = 1023.10' (E)	S-110 6.5%
S-110	DI (2'x3')	RIM = 1024.52' INV IN = 1003.90' (W) INV IN = 1003.90' (E) INV OUT = 1003.80' (NE)	S-100 6.5% S-130 4.8% S-140 6.5%
S-140	JB RAISE TOP TO FINISHED GRADE	RIM = 1015.50' INV IN = 993.89' (SW) INV IN = 994.14' (S) INV OUT = 993.89' (NE)	S-110 6.5% S-150 6.1% S-294 2.3%
S-170	JB TO REMAIN	RIM = 981.07' INV IN = 975.40' (S) INV OUT = 971.41' (NE)	S-180 10.0% S-175 1.0% *
S-175	HW DEMOLISH AND REPLACE EXISTING HEADWALL AND INSTALL SECURITY GRATE	INV IN = 971.18' (SW)	S-170 1.0% *
S-180	NEW DI	RIM = 993.88' INV OUT = 986.77' (N)	S-170 10.0% *

STRUCTURE TABLE C-105

STRUCTURE NAME	STRUCTURE TYPE	STRUCTURE DETAIL	OPPOSITE STURCTURES & PIPE SLOPES
S-130	D1 (2'x3')	RIM = 1021.93' INV OUT = 1018.60' (W)	S-110 4.8%
S-150	HW DEMOLISH AND REPLACE HEADWALL AND INSTALL SECURITY GRATE	RIM = 975.13' INV IN = 971.30' (SW)	S-140 6.1%
S-260	HW DEMOLISH AND REPLACE EXISTING HEADWALL AND INSTALL SECURITY GRATE	RIM = 973.11' INV IN = 970.90' (S)	S-240 7.0%
S-270	HW DEMOLISH AND REPLACE EXISTING HEADWALL AND INSTALL SECURITY GRATE	RIM = 974.19' INV IN = 970.90' (SE)	S-290 6.8%
S-330	DI NEW INLET REPLACE STRUCTURE	RIM = 991.99' INV OUT = 978.21' (NE)	S-341 2.0% *
S-332	REMOVE AND REPLACE DI	RIM = 989.61' INV OUT = 971.47' (N)	S-333 2.0% *
S-333	JB	RIM = 976.93' INV IN = 970.37' (S) INV OUT = 965.74' (NE)	S-332 2.0% * S-334 2.0% *
S-334	HW INSTALL SECURITY GRATE	INV IN = 965.50' (SW)	S-333 2.0% *
S-340	HW	INV IN = 972.40' (SW)	S-341 2.0% *
S-341	JB	RIM = 986.34' INV IN = 977.55' (SW) INV OUT = 972.77' (NE)	S-330 2.0% * S-340 2.0% *
S-400	JB	RIM = 1000.25' INV IN = 994.82' (E)	S-410 9.9%

STRUCTURE TABLE C-106

STRUCTURE NAME	STRUCTURE TYPE	STRUCTURE DETAIL	OPPOSITE STURCTURES & PIPE SLOPES
S-410	GI	RIM = 1018.37' INV OUT = 1017.90' (W)	S-400 9.9%
S-420	INLET - TYPE C	RIM = 1018.33' INV OUT = 1015.13' (NE)	S-430 1.5%
S-430	GI	RIM = 1016.26' INV IN = 1012.05' (SW)	S-420 1.5%
S-440	GI	RIM = 1015.65' INV OUT = UNK (SW)	S-450 UNK
S-450	GI	RIM = 1016.23' INV IN = UNK (NE) INV OUT = UNK (SW)	S-440 UNK S-460 UNK
S-460	GI	RIM = 1016.50' INV IN = UNK (NE)	S-450 UNK
S-500	PIPE	INV IN = 996.94' (W)	S-510 UNK
S-510	–	RIM = 1000.90' INV IN = UNK (W) INV OUT = UNK (E)	S-520 UNK S-500 UNK
S-520	PIPE	INV IN = 1008.22' (W) INV IN = UNK (S) INV OUT = 1008.22' (E)	S-530 2.4% S-510 UNK S-525 8.2%
S-525	PIPE	INV OUT = 1012.79' (N)	S-520 8.2%
S-530	GI	RIM = 1013.95' INV IN = UNK (S) INV OUT = 1009.64' (E)	S-540 UNK S-520 2.4%
S-540	GI	RIM = 1014.64' INV IN = UNK (SE) INV OUT = UNK (N)	S-550 UNK S-530 UNK
S-550	GI	RIM = 1015.71' INV IN = UNK (S) INV OUT = UNK (NW)	S-560 UNK S-540 UNK
S-560	GI	RIM = 1016.30' INV IN = 1012.06' (SE) INV OUT = UNK (N)	S-570 3.0% S-550 UNK
S-570	GI	RIM = 1015.29' INV OUT = 1013.08' (NW)	S-560 3.0%
S-600	YI	RIM = 974.14' INV IN = 968.14' (S)	S-610 1.4%
S-610	DI	RIM = 978.10' INV IN = 971.66' (SW) INV OUT = 971.66' (N)	S-620 1.8% S-600 1.4%
S-620	SP BOX	RIM = 980.47' INV IN = 973.57' (S) INV OUT = 973.52' (NE) INV OUT = UNK (NW)	S-630 2.0% S-610 1.8% S-625 UNK
S-625	NEW HW	(MATCH EX. INV @ POND)	S-620 MATCH EX. SLOPE *
S-630	YI	RIM = 984.02' INV IN = UNK (S) INV OUT = UNK (N)	S-640 UNK S-620 UNK
S-640	YI (THIS IS STMH)	RIM = 998.19' INV IN = UNK (S) INV IN = UNK (E) INV OUT = UNK (N)	S-660 UNK S-630 UNK S-659 UNK
S-650	JB	RIM = 1012.57' INV IN = 1008.30' (NW) INV OUT = 1008.30' (SW)	S-651 1.3% S-676 3.7%
S-651	JB	RIM = 1011.13' INV IN = 1007.80' (NE) INV OUT = 1006.40' (NW)	S-650 1.3% S-652 0.4%

STRUCTURE TABLE C-106

STRUCTURE NAME	STRUCTURE TYPE	STRUCTURE DETAIL	OPPOSITE STURCTURES & PIPE SLOPES
S-652	DI	RIM = 1011.04' INV IN = 1006.10' (SE) INV OUT = 1005.90' (NW)	S-651 0.4% S-653 0.5%
S-653	DI	RIM = 1010.77' INV IN = 1005.50' (SE) INV OUT = UNK (NW)	S-652 0.5% S-654 UNK
S-654	JB	RIM = 1010.70' INV IN = UNK (SE) INV IN = 1005.60' (NE) INV OUT = 1004.68' (NW)	S-653 UNK S-656 0.6% S-657 1.4%
S-655	PIPE	INV OUT = 1006.08' (W)	S-661 3.3%
S-656	JB	RIM = 1010.30' INV IN = 1005.90' (SE) INV OUT = 1005.10' (SW)	S-661 0.8% S-654 0.6%
S-657	JB	RIM = 1009.03' INV IN = 1003.50' (SE) INV OUT = 993.60' (W)	S-654 1.4% S-659 1.5%
S-658	GI	RIM = 1009.78' INV OUT = 985.20' (N)	S-659 22.8%
S-659	REPLACE JB AND RAISE TO GRADE	RIM = 995.86' INV IN = 993.11' (E) INV IN = 993.11' (S) INV OUT = 993.11' (W)	S-657 1.5% S-640 15.2% S-658 22.8%
S-660	STMH	RIM = 1011.00' INV IN = UNK (S) INV OUT = UNK (N)	S-670 UNK S-640 UNK
S-661	JB	RIM = 1011.16' INV IN = 1006.40' (E) INV IN = 1007.10' (W) INV OUT = UNK (NW)	S-655 3.3% S-656 0.8% S-671 UNK
S-670	JB	RIM = 1010.23' INV IN = 988.00' (S) INV IN = UNK (E) INV OUT = 987.90' (N)	S-680 1.8% S-660 UNK S-674 5.1%
S-671	PIPE	INV OUT = UNK (E)	S-661 UNK
S-672	PIPE	INV OUT = 1008.89' (E)	S-676 0.5%
S-673	PIPE	INV OUT = 1009.40' (SW)	S-676 0.5%
S-674	GI	RIM = 1012.85' INV IN = 1004.10' (SE) INV OUT = 1003.60' (W)	S-675 0.4% S-670 5.1%
S-675	DI	RIM = 1010.11' INV OUT = 1005.00' (NW)	S-674 0.4%
S-676	DI	RIM = 1012.13' INV IN = 1008.80' (W) INV IN = 1009.20' (NE) INV OUT = 1009.10' (SE)	S-672 0.5% S-650 3.7% S-673 0.5%
S-710	GI REPLACE	RIM = 1011.67' INV IN = 1010.00' (SE) INV OUT = 1009.90' (NW)	S-711 0.5% S-720 1.2%
S-711	GI	RIM = 1012.37' INV IN = 1010.70' (SE) INV OUT = 1010.20' (NW)	S-700 0.7% S-710 0.5%
S-720	GI REPLACE	RIM = 1011.67' INV IN = 1009.20' (SE) ABANDONED PIPE (NW) INV OUT = 1009.20' (NE)	S-710 1.2% S-740 4.1% *
S-740	NEW GI	RIM = 1011.25' INV IN = 1004.71' (SE) INV OUT = 1007.00' (NE)	S-720 4.1% * S-750 1.0% *

STRUCTURE TABLE C-107

STRUCTURE NAME	STRUCTURE TYPE	STRUCTURE DETAIL	OPPOSITE STURCTURES & PIPE SLOPES
S-750	REPLACE EXISTING DI	RIM = 1010.08' INV IN = 1005.04' (SW) INV OUT = 1005.04' (NE)	S-760 3.5% * S-740 1.0% *
S-752	DI	RIM = 1007.46' INV IN = 1003.30' (SW) INV OUT = 1003.50' (E)	S-760 3.9%
S-760	DI	RIM = 1005.35' INV IN = 1001.50' (SW) INV IN = 1001.70' (W) INV OUT = 1001.50' (NE)	S-750 3.5% S-770 0.5% S-752 3.9%
S-761	CB	RIM = 1003.00' INV IN = 999.70' (SE) INV OUT = 1000.70' (SE)	S-762 1.5% S-762 1.5%
S-762	CB	RIM = 1002.89' INV IN = 999.80' (SE) INV IN = 999.70' (NW) INV OUT = 1000.70' (NW) INV OUT = 999.50' (N)	S-763 0.5% S-761 1.5% S-761 1.5% S-764 0.5%
S-763	PIPE	INV OUT = 1000.01' (NW)	S-762 0.5%
S-764	PIPE	INV IN = 999.14' (S)	S-762 0.5%
S-770	DI	RIM = 1003.82' INV IN = 1001.24' (SW) INV IN = 1000.60' (W) INV IN = 1000.70' (SE) INV IN = 1000.70' (SW) INV OUT = 1000.40' (NE)	S-760 0.5% S-774 1.7% S-780 1.3% S-775 1.6%
S-771	DI	RIM = 1006.02' INV OUT = 1001.70' (E)	S-774 3.7%
S-773	DI	RIM = 1004.17' INV OUT = 1002.50' (SE)	S-774 1.6%
S-774	DI	RIM = 1004.57' INV IN = 1002.91' (W) INV IN = 1001.00' (NW) INV OUT = 1000.90' (E)	S-771 3.7% S-770 1.7% S-773 1.6%
S-775	DI	RIM = 1005.63' INV IN = 1002.70' (S) INV OUT = 1001.50' (NW)	S-776 2.5% S-770 1.6%
S-776	SWCB	RIM = 1011.08' INV OUT = 1004.70' (N)	S-775 2.5%
S-780	JB	RIM = 1003.99' INV IN = 998.50' (SW) INV OUT = 998.40' (NE)	S-770 1.3% S-781 0.8%
S-781	JB	RIM = 1002.14' INV IN = 997.60' (SW) INV IN = UNK (S) INV OUT = 996.00' (E)	S-780 0.8% S-783 UNK S-789 4.9%
S-783	DI	RIM = 997.24' INV IN = UNK (W) INV OUT = UNK (E)	S-781 UNK S-784 UNK
S-784	CI	RIM = 997.76' INV IN = UNK (W) INV OUT = 992.90' (NE)	S-783 UNK S-786 1.0%
S-785	DI	RIM = 1004.68' INV IN = 1001.30' (W) INV OUT = 1001.30' (NE)	S-787 0.5% S-789 0.5%
S-786	PIPE	INV IN = 992.00' (SW)	S-784 1.0%
S-787	PIPE	INV OUT = 1001.54' (E)	S-785 0.5%
S-788	SWCB	RIM = 1004.39' INV OUT = 1001.20' (SW)	S-789 0.7%
S-789	DI	RIM = 1004.97' INV IN = 1001.00' (SW) INV IN = 1000.80' (NE) INV OUT = 1000.70' (N)	S-785 0.5% S-781 4.9% S-788 0.7%
S-791	PIPE	INV OUT = 987.69' (NE)	S-796 0.5%

NOTES:

* NEW PIPE INSTALLATION. SEE STORM SEWER PROFILES (C-200 SHEETS).

** VERIFY INVERT OF EXISTING PIPE(S) PRIOR TO REPAIR.

UNK = UNKNOWN

US Army Corps of Engineers®
Louisville District

TANYA NORMAN, P.E.
P.E. No. 0038055, GA
GEORGIA REGISTERED No. PE038055 PROFESSIONAL ENGINEER TANYA L. NORMAN
DATE: 01/09/2026

MARK | DESCRIPTION | DATE

ISSUE DATE: JANUARY 9, 2026
SOLICITATION NO.:
CONTRACT NO.:
FILE NUMBER: 1230218
DESIGNED BY: T. NORMAN
DRAWN BY: J.P. ARISTIZABAL
CHECKED BY: D.M. LECKIE
SUBMITTED BY: A. DUEHR
SIZE: ANSI D
FILE NAME: 470584-C-101(D).dwg

U.S. ARMY CORPS OF ENGINEERS
LOUISVILLE DISTRICT
LOUISVILLE, KENTUCKY 40210-0059

POND
3500 PARKWAY LANE
SUITE 500
PEACHTREE CORNERS, GA 30092
PHONE (678) 336-7740
POND JOB No. 1230218

REPAIR & MAINTAIN AIRFIELD STORMWATER SYSTEM
PHASE II
DOBBINS AIR RESERVE BASE, GEORGIA
PROJECT NO.: FGWB 21-0002 & FGWB 25-0006
P2#: 470584

STRUCTURE TABLES

SHEET ID
C-601

CERTIFIED FINAL

FILE PATH: X:\FY23\1230218\04.CAD BIM\04.02.CAD_PH 2 SHEETS\470584-C-101(D) PLOTTED: 01/09/2026 BY: NORMAN, TANYA

STRUCTURE TABLE C-107

STRUCTURE NAME	STRUCTURE TYPE	STRUCTURE DETAIL	OPPOSITE STURCTURES & PIPE SLOPES
S-792	PIPE	INV OUT = 988.49' (E)	S-794 0.5%
S-793	PIPE	INV OUT = 989.49' (N)	S-794 0.5%
S-794	DI	RIM = 992.71' INV IN = 989.30' (S) INV IN = 988.30' (W) INV OUT = 988.10' (N)	S-793 0.5% S-796 1.0% S-792 0.5%
S-795	PIPE	INV IN = 987.14' (W)	S-796 0.5%
S-796	JB	RIM = 991.57' INV IN = 987.50' (S) INV IN = 987.50' (SW) INV OUT = 987.40' (E)	S-794 1.0% S-795 0.5% S-791 0.5%
S-802	DI	RIM = 1009.84' INV IN = 1008.80' (SW) INV OUT = 1007.90' (NE)	S-801 0.5% S-803 1.3%
S-803	DI	RIM = 1009.03' INV IN = 1006.30' (SW) INV OUT = 1006.30' (NE)	S-802 1.3% S-804 2.6%
S-804	JB	RIM = 1009.82' INV IN = 1005.20' (SW) INV IN = 1005.70' (NW) INV OUT = 1005.20' (NE)	S-803 2.6% S-806 2.3% S-805 0.3%
S-805	CB	RIM = 1009.49' INV OUT = 1005.80' (SE)	S-804 0.3%
S-806	DI	RIM = 1005.33' INV IN = 1002.80' (SW) INV OUT = 1002.70' (NE)	S-804 2.3% S-807 3.0%
S-807	DI	RIM = 1001.23' INV IN = 998.90' (SW) INV IN = 999.02' (S) INV OUT = 997.90' (NE)	S-806 3.0% S-809 3.7% S-839 3.0%
S-808	JB	RIM = 1000.04' INV OUT = 995.40' (SE)	S-809 8.1%
S-809	JB	RIM = 1000.71' INV IN = 995.90' (SW) INV IN = 993.40' (NW) INV OUT = 993.10' (SE)	S-807 3.7% S-811 13.1% S-808 8.1%
S-811	JB	RIM = 1001.71' INV IN = 994.20' (NW) INV OUT = 994.20' (E)	S-809 13.1% S-812 1.0%
S-812	JB	RIM = 997.73' INV IN = 992.50' (W) INV IN = 994.80' (W) INV OUT = 992.50' (N)	S-811 1.0% S-822 6.4% S-821 0.5%
S-821	PIPE	INV OUT = 994.91' (E)	S-812 0.5%
S-822	CB	RIM = 996.58' INV IN = 991.30' (S) INV OUT = 990.10' (NE)	S-812 6.4% S-823 8.3%
S-823	DI	RIM = 997.09' INV IN = 984.20' (SW) INV IN = 993.10' (W) INV IN = 994.30' (N) INV IN = 994.60' (NE) INV OUT = 990.10' (NE)	S-822 8.3% S-828 10.8% S-824 0.5% S-826 0.5% S-827 0.5%
S-824	PIPE	INV OUT = 993.35' (E)	S-823 0.5%
S-826	PIPE	INV OUT = 994.46' (S)	S-823 0.5%
S-827	PIPE	INV OUT = 994.79' (SW)	S-823 0.5%
S-828	JB	RIM = 976.88' INV IN = 969.20' (S) INV IN = 971.80' (SW) INV OUT = 969.10' (NE)	S-1012 0.5% S-991 2.8% S-823 10.8%
S-831	DI	RIM = 1008.84' INV IN = 1006.70' (S) INV OUT = 1006.70' (N)	S-830 0.4% S-832 3.8%

STRUCTURE TABLE C-107

STRUCTURE NAME	STRUCTURE TYPE	STRUCTURE DETAIL	OPPOSITE STURCTURES & PIPE SLOPES
S-832	JB	RIM = 1009.17' INV IN = 1005.40' (S) INV OUT = 1005.40' (NE)	S-831 3.8% S-833 1.9%
S-833	DI	RIM = 1007.28' INV IN = 1002.90' (SW) INV IN = 1002.70' (SE) INV OUT = 1002.80' (NE)	S-832 1.9% S-838 2.3% S-839 1.5%
S-834	PIPE	INV OUT = 1006.02' (S)	S-835 0.5%
S-835	DI	RIM = 1007.38' INV IN = UNK (N) INV OUT = UNK (SW)	S-834 UNK S-836 UNK
S-836	JB	RIM = 1009.12' INV IN = UNK (NE) INV OUT = UNK (NW)	S-835 UNK S-837 UNK
S-837	JB	RIM = 1008.11' INV IN = UNK (SE) INV OUT = UNK ' (W)	S-836 UNK S-838 UNK
S-838	DI	RIM = 1007.26' INV IN = UNK (E) INV OUT = 1004.20' (NW)	S-837 UNK S-833 2.3%
S-839	DI	RIM = 1005.31' INV IN = 1001.60' (SW) INV OUT = 1001.30' (N)	S-833 1.5% S-807 3.0%
S-850	DWCB	RIM = 1009.39' INV IN = 1005.76' (W) INV OUT = 1004.97' (E)	S-840 0.5% S-860 2.0%
S-860	DI	RIM = 1008.07' INV IN = 1003.07' (W) INV OUT = 1003.07' (SE)	S-850 2.0% S-870 0.5%
S-960	JB	RIM = 1008.77' INV IN = 999.69' (SW) INV OUT = 999.69' (N)	S-930 1.4% S-961 0.4%
S-961	JB	RIM = 1008.99' INV IN = 999.90' (S) INV IN = 1000.30' (E) INV IN = 999.20' (N) INV OUT = 991.10' (NE)	S-963 1.0% * S-960 0.4% S-973 1.5% S-962 2.2%
S-963	NEW JB TOP=MEG	RIM = 1007.77' INV IN = 990.51' (SW) ABANDONED PIPE (N) INV OUT = 988.09' (E)	S-961 1.0% S-980 2.5%
S-964	NEW JB TOP=MEG	RIM = 1007.97' INV IN = 983.02' (S) INV OUT = 983.02' (NE)	S-991 5.1% * S-980 2.5% *
S-971	DI	RIM = 1008.07' INV OUT = 1003.80' (N)	S-973 1.1%
S-972	DI	RIM = 1002.67' INV OUT = 1001.00' (W)	S-973 1.9%
S-973	DI	RIM = 1001.07' INV IN = 999.90' (E) INV IN = 1004.00' (S) INV OUT = 1000.80' (W)	S-972 1.9% S-971 1.1% S-961 1.5%
S-980	NEW JB TOP=MEG	RIM = 1007.00' INV IN = 986.06' (W) INV OUT = 984.45' (N)	S-963 2.5% * S-964 2.5% *
S-991	JB	RIM = 990.82' INV IN = 972.50' (SW) INV IN = 973.00' (S) INV IN = 972.50' (SW) INV OUT = 972.40' (N)	S-992 2.7% S-828 2.8% S-1040 4.6% S-964 5.1% *
S-992	JB	RIM = 992.98' INV IN = 975.10' (W) INV OUT = 974.70' (NE)	S-1000 39.2% ** S-991 2.7%
S-1000	JB	RIM = 1007.69' INV IN = 1004.20' (W) INV OUT = 1003.80' (E)	S-1001 1.9% S-992 39.2% **
S-1001	DI	RIM = 1008.51' INV IN = 1006.50' (W) INV OUT = 1006.20' (E)	S-1002 1.6% S-1000 1.9%
S-1002	DI	RIM = 1008.60' INV OUT = 1006.90' (E)	S-1001 1.6%

STRUCTURE TABLE C-107

STRUCTURE NAME	STRUCTURE TYPE	STRUCTURE DETAIL	OPPOSITE STURCTURES & PIPE SLOPES
S-1010	NEW GI TOP=MEG	RIM = 990.30' INV IN = 985.30' (SE) INV IN = 971.20' (NE) INV OUT = 970.80' (NW)	S-1030 1.2% S-1010-PIPE 1.9% S-1039 14.3%
S-1011	JB	RIM = 982.59' INV IN = 968.80' (SE) INV OUT = 968.70' (N)	S-1010-PIPE 1.8% S-1012 0.5%
S-1012	DI (NOT FIELD LOCATED)	RIM = 972.30' INV IN = 968.46' (SW) INV IN = 968.34' (S) INV OUT = 967.90' (N)	S-828 0.5% S-1013 2.8% S-1011 0.5%
S-1013	DI	RIM = 973.17' INV IN = 961.70' (S) INV IN = 962.90' (E) INV OUT = 959.70' (NW)	S-1012 2.8% S-1015 UNK 0.5%
S-1015	CB	RIM = 973.50' INV IN = UNK (SE) INV IN = 968.60' (E) INV OUT = 959.60' (NW)	S-1013 UNK S-1014 1.4% S-1015-1 2.8%
S-1022	DI	RIM = 994.95' INV OUT = UNK (SE)	S-1034 UNK
S-1030	NEW JB TOP=MEG	RIM = 1004.10' INV IN = 986.90' (SE) INV IN = 989.02' (N) INV OUT = 986.90' (NW)	S-1030-PIPE 3.2% S-1010 1.2% S-1037 5.0%
S-1032	DI	RIM = 994.96' INV IN = 991.30' (W) INV OUT = 991.40' (E)	S-1031 0.5% S-1033 1.1%
S-1033	DI	RIM = 994.37' INV IN = 992.43' (W) INV OUT = UNK (E)	S-1032 1.1% S-1034 UNK
S-1034	JB	RIM = 996.32' INV IN = UNK (W) INV IN = 992.50' (NW) INV IN = UNK (SE) INV OUT = 990.40' (N)	S-1033 UNK S-1035 1.7% S-1022 UNK S-1021 10.8%
S-1035	JB	RIM = 995.72' INV IN = 989.90' (S) INV OUT = 989.30' (N)	S-1034 1.7% S-1036 1.5%
S-1036	DI	RIM = 992.00' INV IN = 988.30' (S) INV IN = 988.20' (E) INV OUT = 987.80' (W)	S-1035 1.5% S-1038 1.3% S-1205 2.8%
S-1037	PIPE	RIM = 993.23' INV OUT = 992.00' (S)	S-1030 5.0%
S-1038	DI	INV IN = 985.90' (E) INV OUT = 985.90' (W)	S-1036 1.3% S-1039 3.7%
S-1039	DI	RIM = 990.88' INV IN = 982.40' (E) INV OUT = 982.30' (SW)	S-1038 3.7% S-1010 14.3%
S-1040	DI	RIM = 990.08' INV IN = 985.90' (SE) INV IN = 974.90' (SE) INV OUT = 974.10' (N)	S-1041 10.3% S-991 4.6%
S-1041	DI	RIM = 1002.70' INV IN = 1000.60' (E) INV OUT = 999.30' (NW)	S-1042 1.5% S-1040 10.3%
S-1042	DI	RIM = 1004.37' INV IN = 1001.60' (E) INV OUT = 1001.50' (W)	S-1043 UNK S-1041 1.5%
S-1043	DI	RIM = 1003.32' INV OUT = UNK (W)	S-1042 UNK
S-1050	TRENCH DRAIN	RIM = 1003.51' INV IN = 1000.10' (N) INV OUT = UNK (NW)	S-1030-PIPE 3.3% S-1051 UNK
S-1051	DI	RIM = 1003.06' INV OUT = UNK (S)	S-1050 UNK
S-1052	DI	RIM = 1007.72' INV IN = 1006.70' (W) INV OUT = 1007.08' E)	S-1064 0.7%
S-1064	DI	RIM = 1006.09' INV IN = 1004.90' (NW) INV OUT = 1004.90' (SE)	S-1052 0.7% S-1065 2.4%

STRUCTURE TABLE C-107

STRUCTURE NAME	STRUCTURE TYPE	STRUCTURE DETAIL	OPPOSITE STURCTURES & PIPE SLOPES
S-1066	DI	RIM = 1006.07' INV OUT = 1004.40' (S)	S-1067 2.1%
S-1068	DI	RIM = 1004.58' INV OUT = 1002.70' (SE)	S-1069 4.9%
S-1069	PIPE	INV IN = 1005.20' (NW)	S-1068 4.9%

STRUCTURE TABLE C-108

STRUCTURE NAME	STRUCTURE TYPE	STRUCTURE DETAIL	OPPOSITE STURCTURES & PIPE SLOPES
S-1021	DI	RIM = 1001.63' INV OUT = 996.90' (NW)	S-1034 10.8%
S-1034	JB	RIM = 996.32' INV IN = 990.50' (W) INV IN = 992.50' (NW) INV IN = 992.60' (SE) INV OUT = 990.40' (N)	S-1033 0.3% S-1035 1.7% S-1022 UNK S-1021 10.8%
S-1035	JB	RIM = 995.72' INV IN = 989.90' (S) INV OUT = 989.30' (N)	S-1034 1.7% S-1036 1.5%
S-1200	DI	RIM = 1005.78' INV OUT = 1003.20' (S)	S-1210 0.4%
S-1201	DI	RIM = 1003.84' INV OUT = 1000.00' (NW)	S-1202 0.5%
S-1202	DI	RIM = 1004.37' INV IN = 999.30' (SE) INV OUT = 999.00' (NW)	S-1201 0.5% S-1204 4.0%
S-1203	DI	RIM = 1002.53' INV OUT = 998.70' (W)	S-1204 1.5%
S-1204	DI	RIM = 1002.02' INV IN = 996.60' (SE) INV IN = 996.60' (E) INV OUT = 996.50' (NW)	S-1202 4.0% S-1205 4.6% S-1203 1.5%
S-1205	DI	RIM = 992.57' INV IN = 990.10' (SE) INV OUT = 990.00' (W)	S-1204 4.6% S-1036 2.8%
S-1206	PIPE NOT VISIBLE	INV OUT = UNK (N)	S-1207 UNK
S-1207	INV INACCESSIBLE SOLID METAL LID	RIM = 1002.67' INV IN = UNK (S)	S-1206 UNK

STRUCTURE TABLE C-109

STRUCTURE NAME	STRUCTURE TYPE	STRUCTURE DETAIL	OPPOSITE STURCTURES & PIPE SLOPES
S-1400	HW	INV IN = 1045.70' (S)	S-1410 UNK **
S-1402	JB	INV IN = 1046.40' (E) INV OUT = 1054.86' (W)	S-1403 1.0% S-1410 0.5%
S-1403	JB (PIPE SIZE CONNECTIONS NOT CONFIRMED)	RIM = 1057.63' INV IN = 1044.30' (E) INV OUT = 1044.30' (W)	S-1404 1.7% S-1402 1.0%
S-1410	CATCH-BASIN MH	RIM = 1058.24' INV IN = UNK (E) INV OUT = 996.00' (N)	S-1400 UNK ** S-1402 0.5%

NOTES:
* NEW PIPE INSTALLATION. SEE STORM SEWER PROFILES (C-200 SHEETS).
** VERIFY INVERT OF EXISTING PIPE(S) PRIOR TO REPAIR.
UNK = UNKNOWN

US Army Corps of Engineers® Louisville District

TANYA NORMAN, P.E.
P.E. No. 0038055, GA
GEORGIA REGISTERED No. PE038055 PROFESSIONAL ENGINEER TANYA L. NORMAN
DATE: 01/09/2026

MARK | DESCRIPTION | DATE

ISSUE DATE: JANUARY 9, 2026
SOLICITATION NO.:
CONTRACT NO.:
FILE NUMBER: 1230218
DESIGNED BY: T. NORMAN
DRAWN BY: J.P. ARISTIZABAL
CHECKED BY: D.M. LECKIE
SUBMITTED BY: A. DUEHR
SIZE: ANSI D
FILE NAME: 470584-C-101(D).dwg

U.S. ARMY CORPS OF ENGINEERS
LOUISVILLE DISTRICT
LOUISVILLE, KENTUCKY 40210-0059

POND
3500 PARKWAY LANE
SUITE 500
PEACHTREE CORNERS, GA 30092
PHONE (678) 336-7740
POND JOB No. 1230218

REPAIR & MAINTAIN AIRFIELD STORMWATER SYSTEM
PHASE II
DOBBINS AIR RESERVE BASE, GEORGIA
PROJECT NO.: FGWB 21-0002 & FGWB 25-0006
P2#: 470584

STRUCTURE TABLES

SHEET ID
C-602

CERTIFIED FINAL

FILE PATH: X:\FY23\1230218\04.CAD BIM\04.02.CAD_PH 2 SHEETS\470584-C-101(D) PLOTTED: 01/09/2026 BY: NORMAN, TANYA

FILE PATH: X:\FY23\1230218\04.CAD BIM\04.02.CAD_PH 2 SHEETS\470584-C-101(D) PLOTTED: 01/09/2026 BY: NORMAN, TANYA

STRUCTURE TABLE C-110

STRUCTURE NAME	STRUCTURE TYPE	STRUCTURE DETAIL	OPPOSITE STURCTURES & PIPE SLOPES
S-190	DI (2'x6.2')	RIM = 1024.95' INV IN = 1015.80' (W) INV OUT = 1015.50' (N)	S-201 1.8% S-292 2.3%
S-200	DI (2'x6.2')	RIM = 1029.13' INV OUT = 1025.50' (E)	S-201 1.8%
S-201	NEW DI	RIM = 1027.44' INV IN = 1020.64' (W) INV OUT = 1020.66' (E)	S-200 1.8% S-190 1.8%
S-210	JB	RIM = 1025.50' ABANDONED PIPE(E) INV OUT = 1016.49' (N)	0.4%
S-292	JB RAISE TO GRADE	RIM = 1028.04' INV IN = 1011.80' (S) INV IN = 1012.05' (SE) INV IN = 1015.80' (S) INV OUT = 1011.80' (N)	S-190 2.3% S-294 2.3% S-220 1.0% * S-210 0.2%
S-294	NEW DI	RIM = 1028.95' INV IN = 1000.35' (S) INV OUT = 1000.35' (N)	S-292 2.3% S-140 2.3%

STRUCTURE TABLE C-111

STRUCTURE NAME	STRUCTURE TYPE	STRUCTURE DETAIL	OPPOSITE STURCTURES & PIPE SLOPES
S-220	NEW DI'	RIM = 1024.87' INV IN = 1018.35' (S) INV OUT = 1017.60' (NW)	S-225 1.0% * S-292 1.0% *
S-230	DI (1.9'x3')	RIM = 1020.59' INV OUT = 1017.20' (E)	S-240 5.1%
S-240	DI (2'x3')	RIM = 1018.32' INV IN = 998.90' (W) INV IN = 998.90' (E) INV OUT = 998.80' (N)	S-230 5.1% S-250 4.0% S-260 7.0%
S-250	DI (2'x6.2')	RIM = 1017.84' INV OUT = 1013.90' (W)	S-240 4.0%
S-293	DI NEW INLET	RIM = 1018.11' INV IN = 999.80' (SE) INV OUT = 999.80' (NW)	S-300 1.0% S-290 0.6%
S-1900	DI (2'x2.9')	RIM = 1020.43' INV OUT = 1013.80' (E)	S-1910 0.6%

STRUCTURE TABLE C-112

STRUCTURE NAME	STRUCTURE TYPE	STRUCTURE DETAIL	OPPOSITE STURCTURES & PIPE SLOPES
S-300	DI (3.7'x2.8')	RIM = 1017.96' INV IN = 1005.30' (E) INV IN = 1004.20' (SE) INV IN = 1010.30' (NE) INV OUT = 1003.90' (NW)	S-310 1.7% S-320 0.8% S-293 1.0% S-305 4.2%
S-305	DI (2.5'x2')	RIM = 1017.48' INV OUT = 1013.60' (SW)	S-300 4.2%
S-310	DI (7.4'x2.8')	RIM = 1014.77' INV OUT = 1009.30' (W)	S-300 1.7%
S-320	REPLACE TOP	RIM = 1018.00' INV OUT = 1004.90' (NW)	S-300 0.8%
S-680	REMOVE AND REPLACE 4'x6' CONC. LID	RIM = 1011.42' INV IN = 999.32' (S) INV OUT = 999.32' (N)	S-690 2.2% S-670 1.8%
S-690	2xDI (1.8'x2.8')	RIM = 1013.15' INV IN = 1003.60' (W) INV IN = 1008.80' (E) INV IN = 1003.80' (SE) INV IN = 1004.10' (S) INV OUT = 1003.10' (N)	S-692 0.9% S-698 1.3% S-696 1.7% S-694 0.5% S-680 2.2%
S-692	DI (3'x11.2')	RIM = 1012.00' INV IN = 1007.90' (SE) INV IN = 1007.90' (SE) INV OUT = 1007.80' (E)	UNK S-690 0.9% S-994 1.3% *
S-698	DI (1.8'x2.8') REPLACE TOP	RIM = 1013.15' INV OUT = 1010.40' (W)	S-690 1.3%
S-994	NEW DI	RIM = 1014.52' INV OUT = 1011.58' (NW)	S-692 1.3% *

STRUCTURE TABLE C-113

STRUCTURE NAME	STRUCTURE TYPE	STRUCTURE DETAIL	OPPOSITE STURCTURES & PIPE SLOPES
S-696	2xDI (1.8'x2.8')	RIM = 1012.81' INV OUT = 1010.06' (NW)	S-690 1.7%
S-700	GI	RIM = 1012.67' INV IN = 1011.30' (SE) INV OUT = 1011.00' (NW)	S-711 0.7% S-701 0.3%
S-701	PIPE	INV OUT = 1011.46' (NW)	S-700 0.3%
S-800	DI	RIM = 1009.85' INV OUT = 1006.89' (NW)	S-810 0.5%
S-810	DI	RIM = 1009.98' INV IN = 1006.56' (SE) INV IN = 1006.56' (NW) INV IN = 1006.56' (NE)	S-800 0.5% S-820 0.5% S-813 0.5%
S-813	DI	RIM = 1010.23' INV IN = 1007.40' (E) INV OUT = 1006.90' (SW)	S-814 1.0% S-810 0.5%
S-814	CO	RIM = 1009.98' INV IN = 1007.60' (SE) INV OUT = 1007.60' (W)	S-815 1.5% S-813 1.0%
S-815	CO	RIM = 1010.76' INV IN = 1007.80' (W) INV IN = 1007.80' (NE) INV OUT = 1007.80' (NW)	S-816 1.2% S-814 1.5% S-818 1.2%
S-816	CO	RIM = 1010.81' INV IN = 1008.05' (S) INV OUT = 1008.05' (E)	S-817 1.1% S-815 1.2%
S-817	PIPE	INV OUT = 1008.15' (N)	S-816 1.1%
S-818	CO	RIM = 1010.76' INV IN = 1008.05' (SE) INV OUT = 1008.05' (SW)	S-819 1.1% S-815 1.2%
S-819	PIPE	INV OUT = 1008.15' (NW)	S-818 1.1%
S-820	DI	RIM = 1009.94' INV IN = 1006.30' (NW) INV IN = 1006.70' (NE) INV OUT = 1006.50' (SE)	S-830 1.0% S-810 0.5% S-825 1.4%
S-825	DI	RIM = 1010.04' INV OUT = 1007.10' (SW)	S-820 1.4%
S-830	DI	RIM = 1010.03' INV IN = 1007.00' (SW) INV IN = 1006.30' (W) INV OUT = 1005.93' (SE) INV OUT = 1006.10' (N)	S-820 1.0% S-831 0.4% S-841 4.1% S-845 0.5%
S-840	DWCB	RIM = 1009.73' INV OUT = 1006.35' (E)	S-850 0.5%
S-841	DI	RIM = 1012.31' INV IN = UNK (S) INV IN = 1007.50' (NE) INV OUT = 1009.40' (NE)	S-842 UNK S-830 4.1% S-844 0.5%
S-842	DI	RIM = 3370.52' INV IN = 1008.50' (W) INV OUT = UNK (N)	S-843 0.5% S-841 UNK
S-843	PIPE	INV OUT = 1008.61' (E)	S-842 0.5%
S-844	PIPE	INV OUT = 1007.57' (SW)	S-841 0.5%
S-845	PIPE	INV OUT = 1006.36' (E)	S-830 0.5%
S-870	DI	RIM = 1008.33' INV IN = 1002.90' (NW) INV OUT = 1005.23' (S)	S-860 0.5% S-880 0.5%
S-880	DI	RIM = 1009.20' INV IN = 1005.02' (N)	S-870 0.5%

STRUCTURE TABLE C-113

STRUCTURE NAME	STRUCTURE TYPE	STRUCTURE DETAIL	OPPOSITE STURCTURES & PIPE SLOPES
S-900	GI	RIM = 1010.47' INV OUT = UNK (E)	S-910 UNK
S-910	DI	RIM = 2.31' INV IN = UNK W) INV OUT UNK (E)	S-900 UNK S-920 UNK
S-920	DI	RIM = 2.31' INV IN = UNK W) INV OUT UNK (N)	S-910 UNK S-930 UNK
S-930	GI	RIM = 1009.49' INV IN = 1004.42' (S) INV IN = UNK (W) INV OUT = 1002.09' (NE)	S-960 1.4% S-920 UNK S-933 0.5%
S-933	DI	RIM = 1008.25' INV IN = 1005.39' (NW) INV OUT = 1005.03' (E)	S-934 2.0% S-930 0.5%
S-934	CO	RIM = 1010.69' INV IN = 1006.13' (W) INV IN = 1007.50' (N) INV OUT = 1006.12' (SE)	S-935 2.0% S-933 2.0% S-937 2.0%
S-935	CO	RIM = 1010.69' INV IN = 1007.50' (N) INV OUT = 1007.08' (E)	S-936 2.0% S-934 2.0%
S-936	PIPE	INV OUT = 1007.60' (S)	S-935 2.0%
S-937	PIPE	INV OUT = 1007.62' (S)	S-934 2.0%
S-1061	DI	RIM = 1007.19' INV OUT = 1006.00' (S)	S-1062 2.5%
S-1062	PIPE	INV IN = 1005.20' (N)	S-1061 2.5%

STRUCTURE TABLE C-114

STRUCTURE NAME	STRUCTURE TYPE	STRUCTURE DETAIL	OPPOSITE STURCTURES & PIPE SLOPES
S-1100	PIPE	INV OUT = 995.30' (S)	S-1110 1.1%
S-1110	3'x3' STEEL LID	RIM = 1005.17' INV IN = 994.30' (N) INV IN = 1000.40' (E) INV OUT = 994.30' (S)	S-1100 1.1% S-1120 0.1% ** S-1115 3.2%
S-1115	FES	INV OUT = 1001.50' (W)	S-1110 3.2%
S-1120	JB	RIM = 1004.65' INV IN = 994.09' (N) INV IN = 1000.10' (W) INV OUT = 987.78' (E)	S-1110 0.1% ** S-1130 0.1% S-1125 0.1%
S-1125	DI (2.4'x4')	RIM = 1002.56' INV OUT = 1000.20' (E)	S-1120 0.1%
S-1130	JB	RIM = 999.57' INV IN = 987.10' (W) INV IN = 989.60' (N) INV OUT = 984.60' (S)	S-1120 0.1% S-1140 1.5% S-1280 0.9%
S-1210	JB	RIM = 1005.53' INV IN = 1002.43' (N) INV OUT = 1002.43' (S)	S-1200 0.4% S-1220 0.4%
S-1220	GI	RIM = 1005.60' INV IN = 1001.86' (N) INV OUT = 1001.86' (W)	S-1210 0.4% S-1230 0.5%
S-1230	GI	RIM = 1004.89' INV IN = 1001.43' (E) INV IN = 1001.43' (N) INV OUT = 1001.43' (S)	S-1220 0.5% S-1240 1.0% S-1233 8.1%
S-1233	JB	RIM = 1006.07' INV IN = 999.90' (N) INV OUT = 999.90' (S)	S-1234 2.0% S-1230 8.1%
S-1234	GI	RIM = 1004.41' INV IN = 1001.77' (NE) INV OUT = 1001.77' (S)	S-1235 0.4% S-1233 2.0%
S-1235	GI	RIM = 1005.22' INV OUT = 1002.12' (SW)	S-1234 0.4%
S-1240	GI	RIM = 1004.59' INV IN = 1000.92' (N) INV IN = 1000.60' (NE) INV OUT = 1000.60' (S)	S-1230 1.0% S-1250 1.1% S-1241 0.1%
S-1241	JB	RIM = 1003.73' INV IN = UNK (E) INV OUT = UNK (SW)	S-1242 UNK S-1240 0.1%
S-1242	JB	RIM = 1006.10' INV IN = UNK (NE) INV IN = UNK (SE) INV OUT = UNK (W)	S-1245 UNK S-1241 UNK S-1243 UNK
S-1243	PIPE	INV OUT = 1003.63' (NW)	S-1242 0.5%
S-1245	GI	RIM = 1005.71' INV OUT = 1004.12' (SW)	S-1242 3.8%
S-1250	GI	RIM = 1003.00' INV IN = 998.80' (N) INV IN = 999.90' (E) INV OUT = 998.40' (S)	S-1240 1.1% S-1260 0.2% S-1254 1.6%
S-1254	GI	RIM = 1004.37' INV IN = UNK (E) INV OUT = UNK (W)	S-1255 UNK S-1250 UNK
S-1255	GI	RIM = 1004.64' INV OUT = UNK (W)	S-1254 UNK
S-1260	GI	RIM = 1002.59' INV IN = 998.20' (N) INV OUT = 998.20' (E)	S-1250 0.2% S-1270 8.8%
S-1270	GI	RIM = 1002.61' INV IN = 993.78' (W) INV OUT = 997.50' (S)	S-1260 8.8% S-1280 3.7%
S-1280	DI (2.4'x4')	RIM = 996.74' INV IN = 991.70' (N) INV OUT = 990.60' (S)	S-1270 3.7% S-1130 0.9%

NOTES:

* NEW PIPE INSTALLATION. SEE STORM SEWER PROFILES (C-200 SHEETS).

** VERIFY INVERT OF EXISTING PIPE(S) PRIOR TO REPAIR.

UNK = UNKNOWN

US Army Corps of Engineers®
Louisville District

TANYA NORMAN, P.E.
P.E. No. 0038055, GA
GEORGIA REGISTERED No. PE038055 PROFESSIONAL ENGINEER TANYA L. NORMAN
DATE: 01/09/2026

MARK | DESCRIPTION | DATE

ISSUE DATE: JANUARY 9, 2026
SOLICITATION NO.:
CONTRACT NO.:
FILE NUMBER: 1230218
DESIGNED BY: T. NORMAN
DRAWN BY: J.P. ARISTIZABAL
CHECKED BY: D.M. LECKIE
SUBMITTED BY: A. DUEHR
SIZE: ANSI D
FILE NAME: 470584-C-101(D).dwg

U.S. ARMY CORPS OF ENGINEERS
LOUISVILLE DISTRICT
LOUISVILLE, KENTUCKY 40210-0059

POND
3500 PARKWAY LANE
SUITE 500
PEACHTREE CORNERS, GA 30092
PHONE (678) 336-7740
POND JOB No. 1230218

REPAIR & MAINTAIN AIRFIELD STORMWATER SYSTEM
PHASE II
DOBBINS AIR RESERVE BASE, GEORGIA
PROJECT NO.: FGWB 21-0002 & FGWB 25-0006
P2#: 470584

STRUCTURE TABLES

SHEET ID
C-603

CERTIFIED FINAL

STRUCTURE TABLE C-114

STRUCTURE NAME	STRUCTURE TYPE	STRUCTURE DETAIL	OPPOSITE STURCTURES & PIPE SLOPES
S-1300	DI	RIM = 1000.44' INV IN = 997.02' (NW) INV OUT = 996.90' (SE)	S-1310 7.2% S-1312 0.5%
S-1301	DI (FULL OF DEBRIS)	RIM = 1005.72' INV OUT = 1002.36' (E)	S-1302 0.5%
S-1302	DI	RIM = 1005.52' INV IN = 1002.00' (W) INV OUT = 1001.90' (NE)	S-1301 0.5% S-1303 0.7%
S-1303	DI	RIM = 1005.74' INV IN = 1001.00' (SW) INV OUT = 1000.90' (N)	S-1302 0.7% S-1304 0.5%
S-1304	PIPE	INV IN = 1000.29' (S)	S-1303 0.5%
S-1310	FES	INV IN = 990.20' (NW)	S-1300 7.2%
S-1311	DI	RIM = 1001.18' INV OUT = 997.90' (NW)	S-1312 0.2%
S-1312	DI	RIM = 1002.57' INV IN = 998.00' (SE) INV OUT = 997.90' (SE)	S-1311 0.2% S-1300 0.5%
S-1313	INACCESSIBLE	RIM = 1001.70' INV OUT = UNK (SW)	S-1314 UNK
S-1314	FES	INV IN = 997.00' (NE)	S-1313 1.0%
S-1324	PIPE	INV OUT = UNK (S)	S-1320 UNK
S-1325	NO INFO	INV OUT = UNK (E)	S-1320 UNK
S-1330	HW (REPLACE)	INV IN = 988.60' (N)	PIPE SECTION 1.0%

STRUCTURE TABLE C-115

STRUCTURE NAME	STRUCTURE TYPE	STRUCTURE DETAIL	OPPOSITE STURCTURES & PIPE SLOPES
S-1315	DI	RIM = 1004.52' INV OUT = 999.60' (SW)	S-1316 1.8%
S-1316	DI	RIM = 1001.46' INV IN = 997.40' (NE) INV OUT = 996.90' (SE)	S-1315 1.8% S-1323 0.6%
S-1317	DI	RIM = 1003.96' INV OUT = 999.50' (W)	S-1323 2.4%
S-1320	DI (2'x6.2)	RIM = 1003.16' INV IN = 989.80' (N) INV IN = 993.80' (NE) INV IN = 993.50' (W) INV OUT = 989.70' (S)	S-1324 UNK PIPE SECT. 1.0% S-1323 0.6% S-1325 1.5%
S-1323	DI	RIM = 998.71' INV IN = 996.50' (NW) INV IN = 996.60' (E) INV OUT = 995.30' (SW)	S-1320 0.6% S-1316 0.6% S-1317 2.4%
S-1336	DI (2.4'x1.8')	RIM = 995.70' INV OUT = 992.80' (SW)	0.3%

STRUCTURE TABLE C-116

STRUCTURE NAME	STRUCTURE TYPE	STRUCTURE DETAIL	OPPOSITE STURCTURES & PIPE SLOPES
S-1404	JB	RIM = 1056.70' INV IN = 1047.40' (E) INV OUT = 1047.40' (W)	S-1405 0.5% S-1403 1.7%
S-1405	PIPE	RIM = 1057.95' INV OUT = 1047.84' (W)	S-1404 0.5%
S-1430	DI (2'x6.2')	RIM = 1027.56' INV OUT = 1018.90' (S)	S-1440 0.8%
S-1431	HW (ABANDONED)	INV IN = 1051.10' (W)	S-1432 0.5%
S-1432	PIPE	INV OUT = 1051.26' (E)	S-1431 0.5%
S-1440	PIPE	INV IN = 1017.24' (N)	S-1430 0.8%
S-1500	DI (2'x3')	RIM = 1020.19' INV IN = 1016.20' (NW) INV IN = 1016.20' (NE) INV OUT = 1015.80' (E)	S-1505 0.3% S-1510 0.1% S-1504 0.3% **
S-1504	PIPE	INV OUT = 1016.40' (SW)	S-1500 0.3%
S-1505	PIPE	INV OUT = 1016.40' (SE)	S-1500 0.3%
S-1600	DI	RIM = 1024.11' INV OUT = 1018.07' (E)	S-1610 1.1%
S-1610	DI	RIM = 1022.18' INV IN = 1015.36' (W) INV IN = 1015.37' (S) INV OUT = 1015.36' (E)	S-1600 1.1% S-1620 0.3% S-1615 1.0%
S-1615	DI	RIM = 1020.49' INV OUT = 1017.82' (N)	S-1610 1.0%

STRUCTURE TABLE C-117

STRUCTURE NAME	STRUCTURE TYPE	STRUCTURE DETAIL	OPPOSITE STURCTURES & PIPE SLOPES
S-225	NEW DI	RIM = 1025.14' INV OUT = 1019.46' (N)	S-220 1.0% *
S-1504	PIPE	INV OUT = 1016.40' (SW)	S-1500 0.3%
S-1510	DI (2.8'x3.8')	RIM = 1018.75' INV IN = 1015.20' (W) INV IN = 1015.60' (SW) INV OUT = 1015.10' (E)	S-1500 0.1% ** S-1515 0.3% S-1520 0.3%
S-1515	PIPE	INV OUT = 1015.80' (NE)	S-1510 0.3%
S-1520	DI (2'x6.2')	RIM = 1018.16' INV IN = 1013.50' (W) INV IN = 1013.90' (N) INV OUT = 1012.90' (E)	S-1510 0.3% S-1530 0.1% ** S-1525 0.2%
S-1525	DI (3.8'x3.6') LOWER TOP	RIM = 1018.53' INV OUT = 1014.40' (S)	S-1520 0.2%
S-1530	RAISE TO GRADE	RIM = 1019.80' INV IN = 1012.76' (W) INV OUT = 1012.76' (SE)	S-1520 0.1% ** S-1531 2.3%
S-1531	NEW DI	RIM = 1021.40' INV IN = 1009.21' (NW) ABANDONED PIPE (SE) INV OUT = 1009.21' (E)	S-1530 2.3% S-1535 2.3% S-1532 1.9% *
S-1610	DI	RIM = 1022.18' INV IN = 1015.36' (W) INV IN = 1015.37' (S) INV OUT = 1015.36' (E)	S-1600 1.1% S-1620 0.3% S-1615 1.0%
S-1620	DI	RIM = 1022.44' INV IN = 1014.36' (W) INV IN = 1014.36' (S) INV OUT = 1014.30' (E)	S-1610 0.3% S-1630 0.3% S-1625 1.0%
S-1625	DI	RIM = 1017.75' INV OUT = 1015.09' (N)	S-1620 1.0%
S-1630	DI	RIM = 1022.31' INV IN = 1013.24' (W) INV IN = 1015.72' (SW) INV OUT = 1013.20' (SE)	S-1620 0.3% S-1640 1.0% S-1635 1.0%
S-1910	DI (2'x3')	RIM = 1018.09' INV IN = 1010.90' (W) INV OUT = 1010.70' (E)	S-1900 0.6% S-1921 0.6%

STRUCTURE TABLE C-118

STRUCTURE NAME	STRUCTURE TYPE	STRUCTURE DETAIL	OPPOSITE STURCTURES & PIPE SLOPES
S-694	DI NOT LOCATED BY SURVEYOR, BURIED INLET, CONTRACTOR TO VERIFY	RIM = 1013.50' INV OUT = 1007.94' (N)	S-690 0.5%
S-1532	NEW DI	RIM = 1020.60' INV IN = 1003.43' (W) INV OUT = 1003.43' (SE)	S-1531 1.9% * S-1533 1.9% *
S-1533	NEW DI	RIM = 1018.82' INV IN = 1000.37' (NW) INV OUT = 1000.37' (SE)	S-1532 1.9% * S-1534 1.7% *
S-1800	DI	RIM = 1018.34' INV OUT = 1011.80' (E)	S-1810 1.5%
S-1810	DI	RIM = 1016.95' INV IN = 1010.50' (W) INV OUT = 1010.50' (E)	S-1800 1.5% S-1820 0.4%
S-1820	DI	RIM = 1016.95' INV IN = 1010.40' (W) INV OUT = 1010.20' (NE)	S-1810 0.4% S-1830 0.8%
S-1830	DI (3.5'x3.5')	RIM = 1014.84' INV IN = 1008.50' (SW) INV OUT = 1008.40' (E)	S-1820 0.8% S-1840 2.0%
S-1840	DI (3.5'x3.5')	RIM = 1010.32' INV IN = 1004.80' (W) INV IN = 1004.80' (SE) INV OUT = 1004.50' (SE)	S-1830 2.0% S-1850 8.2% S-1845 6.4%
S-1845	DI (2.7'x2.7')	RIM = 1010.00' INV OUT = 1007.30' (NW)	S-1840 6.4%
S-1920	JB	RIM = 1018.22' INV IN = 1006.40' (W) INV OUT = 1005.90' (E)	S-1921 0.6% S-1930 0.4%
S-1921	NEW DI	RIM = 1020.00' INV IN = 1007.89' (W) INV OUT = 1007.90' (E)	S-1910 0.6% S-1920 0.6%
S-1930	JB	RIM = 1016.55' INV IN = 1005.10' (W) INV OUT = 1004.90' (S)	S-1920 0.4% S-1940 0.4%
S-1940	JB	RIM = 1013.95' INV IN = 1004.20' (N) INV IN = 1004.20' (E) INV OUT = 1004.10' (S)	S-1930 0.4% S-1946 4.1% S-1942 0.4%
S-1941	PIPE	INV OUT = UNK (NE)	S-1943 UNK
S-1942	JB	RIM = 1013.83' INV IN = 1005.50' (E) INV OUT = 1005.40' (W)	S-1943 0.3% S-1940 0.4%
S-1943	JB	RIM = 1013.07' INV IN = 1006.00' (E) INV IN = 1009.10' (SW) INV OUT = 1006.00' (W)	S-1944 0.4% S-1942 0.3% S-1941 UNK
S-1944	DI (6'x2.9')	RIM = 1009.78' INV IN = 1006.50' (SE) INV OUT = 1006.40' (W)	S-1943 0.4% S-1945 1.0% *
S-1945	NEW DI	RIM = 1011.15' INV OUT = 1007.95' (NW)	S-1944 1.0% *
S-1946	NEW DI	RIM = 1013.45' INV IN = 997.80' (N) INV OUT = 997.80' (S)	S-1940 4.1% S-1950 4.1%
S-2000	NEW DI	RIM = 1009.99' INV OUT = 1006.36' (W)	S-2010 2.5% *
S-2010	DI (6'x2.9') (STEEL PLATE WITH 12" OPENING AT CUT PIPE)	RIM = 1005.23' INV IN = 1000.40' (E) INV OUT = 1000.40' (S)	S-2021 1.4% S-2000 2.5% *

NOTES:
* NEW PIPE INSTALLATION. SEE STORM SEWER PROFILES (C-200 SHEETS).
** VERIFY INVERT OF EXISTING PIPE(S) PRIOR TO REPAIR.
UNK = UNKNOWN

US Army Corps of Engineers®
Louisville District

TANYA NORMAN, P.E.
P.E. No. 0038055, GA
GEORGIA REGISTERED No. PE0038055 PROFESSIONAL ENGINEER TANYA L. NORMAN
DATE: 01/09/2026

MARK	DESCRIPTION	DATE

DESIGNED BY: T. NORMAN
DRAWN BY: J.P. ARISTIZABAL
CHECKED BY: D.M. LECKIE
SUBMITTED BY: A. DUEHR
SIZE: ANSI D
ISSUE DATE: JANUARY 9, 2026
SOLICITATION NO.:
CONTRACT NO.:
FILE NUMBER: 4230216
FILE NAME: 470584-C-101(D).dwg

U.S. ARMY CORPS OF ENGINEERS
LOUISVILLE DISTRICT
LOUISVILLE, KENTUCKY 40210-0059

POND
POND
3055 KELLER SPRINGS ROAD, SUITE 200, ADDISON, TEXAS 75001
1201 PEACHTREE STREET NE, SUITE 400, ATLANTA, GA 30309
PHONE (678) 336-2749
PHONE (972) 503-7215

REPAIR & MAINTAIN AIRFIELD STORMWATER SYSTEM
PHASE II
DOBBINS AIR RESERVE BASE, GEORGIA
PROJECT NO.: FGWB 21-0002 & FGWB 25-0006
P2#: 470584

STRUCTURE TABLES

SHEET ID
C-604

CERTIFIED FINAL

FILE PATH: X:\FY23\123021604.CAD BIM\04.02.CAD_PH 2 SHEETS\470584-C-101(D) PLOTTED: 01/09/2026 BY: NORMAN, TANYA

STRUCTURE TABLE C-119

STRUCTURE NAME	STRUCTURE TYPE	STRUCTURE DETAIL	OPPOSITE STURCTURES & PIPE SLOPES
S-2100	JB	RIM = 1005.67' INV IN = 1002.07' (NW) INV IN = 1002.07' (NE) INV OUT = 1000.47' (N)	S-2110 0.5% S-2102 1.0% S-2104 1.0%
S-2102	PIPE	INV OUT = 1002.51' (SE)	S-2100 1.0%
S-2104	PIPE	INV OUT = 1002.41' (SW)	S-2100 1.0%
S-2110	JB	RIM = 1005.42' INV IN = 1000.02' (S) INV IN = 1002.42' (W) INV IN = 1002.42' (SE) INV OUT = 999.92' (E)	S-2100 0.5% S-2120 2.6% S-2112 1.0% S-2114 1.0%
S-2112	PIPE	INV OUT = 1002.82' (E)	S-2110 1.0%
S-2114	PIPE	INV OUT = 1002.79' (NW)	S-2110 1.0%

STRUCTURE TABLE C-120

STRUCTURE NAME	STRUCTURE TYPE	STRUCTURE DETAIL	OPPOSITE STURCTURES & PIPE SLOPES	
S-1140	DI (2'x3')	RIM = 990.13' INV IN = 979.00' (N) INV OUT = 978.80' (S)	S-1130 1.5% S-1150 UNK	**
S-1150	HW	INV IN = UNK (N)	S-1140 UNK	**
S-2210	NEW HW	INV OUT = 974.30' (S)	S-2212 1.4%	*
S-2212	NEW JB W/ AIRCRAFT LOAD	RIM = 989.91' INV IN = 970.70' (N) INV OUT = 970.70' (S)	S-2210 1.4% S-2214 1.2%	*

STRUCTURE TABLE C-121

STRUCTURE NAME	STRUCTURE TYPE	STRUCTURE DETAIL	OPPOSITE STURCTURES & PIPE SLOPES
S-2400	FES	INV IN = 990.30' (N)	S-2410 3.9%
S-2410	HW	INV OUT = 992.00' (S)	S-2400 3.9%
S-2411	PIPE	INV OUT = 992.14' (S)	S-2412 0.5%
S-2412	HW	INV IN = 992.00' (N)	S-2411 0.5%
S-2420	JB	RIM = 984.95' INV IN = 981.70' (S) INV OUT = 981.70' (E)	S-2425 UNK S-2430 0.2%
S-2425	PIPE	INV OUT = UNK (N)	S-2420 UNK
S-2430	JB	RIM = 985.14' INV IN = 981.50' (W) INV IN = 981.50' (S) INV OUT = 981.40' (E)	S-2420 0.2% PIPE SECT. 1.7% S-2435 0.2%
S-2435	METAL LID BOLTED SHUT	RIM = 985.18' INV OUT = UNK (N)	S-2430 UNK
S-2440	INSTALL MES	INV IN = 979.41' (W)	PIPE SECTION 1.7%
S-2450	36" STANDPIPE	RIM = 974.80' INV OUT = 970.80' (SE)	S-2450-1 14.4%
S-2460	HW	INV IN = 957.10' (NW)	S-2450-1 1.2%
S-2470	REPLACE EXISITING FLARED END SECTION	INV IN = 963.30' (NE)	S-2480 6.4%
S-2471	NEW END WALL	INV IN = 964.30' (NE)	
S-2480	PIPE	INV OUT = 974.10' (SW)	S-2470 6.4%

STRUCTURE TABLE C-122

STRUCTURE NAME	STRUCTURE TYPE	STRUCTURE DETAIL	OPPOSITE STURCTURES & PIPE SLOPES
S-1635	DI	RIM = 1020.82' INV OUT = 1017.72' (NE)	S-1630 1.0%
S-1640	DI	RIM = 1015.08' INV IN = 1007.91' (NW) INV OUT = 1007.91' (S)	S-1650 0.7% S-1630 1.0%
S-1650	DI	RIM = 1013.68' INV IN = 1005.42' (N) INV OUT = 1005.12' (SW)	S-1640 0.7% S-1660 0.6%
S-1660	HW	INV IN = 1003.68' (NE)	S-1650 0.6%
S-1700	PIPE END	INV OUT = 1013.73' (E)	S-1710 1.0%
S-1710	DI	RIM = 1022.22' INV IN = 1013.04' (W) INV OUT = 1013.04' (SE)	S-1700 1.0% S-1720 3.7%
S-1720	HW W/ CONTAINMENT DOOR	INV IN = 1000.63' (NW) INV IN = 1002.38' (N)	S-1710 3.7% S-1730 1.0%
S-1730	DI	RIM = 1010.76' INV OUT = 1008.74' (S)	S-1720 1.0%

STRUCTURE TABLE C-123

STRUCTURE NAME	STRUCTURE TYPE	STRUCTURE DETAIL	OPPOSITE STURCTURES & PIPE SLOPES
S-1534	NEW DI FIELD VERIFY TOP EL (MEG)	RIM = 1014.75' INV IN = 996.16' (NW) INV OUT = 996.16' (S)	S-1533 1.7% * S-1535 2.1% *
S-1535	NEW DI FIELD VERIFY TOP EL (MEG) PLUG EX. 42" CMP	RIM = 1011.91' ABANDONED PIPE (NW) INV IN = 988.45' (N) INV OUT = 988.45' (SE)	S-1531 2.3% S-1540 2.3% S-1534 2.1% *
S-1540	HW	INV IN = 985.50' (NW)	S-1535 2.3%
S-1550	JB	RIM = 1015.26' INV OUT = 1010.99' (S)	S-1560 8.7%
S-1560	HW	INV IN = 990.54' (N)	S-1550 8.7%
S-1810	DI	RIM = 1016.95' INV IN = 1010.50' (W) INV OUT = 1010.50' (E)	S-1800 1.5% S-1820 0.4%
S-1850	HW	INV IN = 981.70' (NW)	S-1840 8.2%
S-1950	JB	RIM = 987.49' INV IN = 981.30' (N) INV OUT = 976.50' (S)	S-1946 4.1% S-1960 2.2%
S-1960	HW (NOT LOCATED)	INV IN = 976.00' (N)	S-1950 2.2%
S-2020	NEW HW	INV IN = 996.00' (N)	S-2021 1.4%
S-2021	PIPE	INV IN = 996.39' (N) INV OUT = 996.41' (S)	S-2010 1.4% S-2020 1.4%
S-2040	DI	RIM = 1003.41' INV OUT = 998.00' (SW)	S-2052 4.8%
S-2052	DI	RIM = 995.35' INV IN = 990.42' (E) INV IN = 990.50' (NE) INV OUT = 990.42' (W)	S-2054 0.5% * S-2056 0.5% * S-2040 4.8% *
S-2054	DI	RIM = 995.27' INV OUT = 990.82' (W)	S-2052 0.5% *
S-2056	NEW HW	INV IN = 990.00' (E)	S-2052 0.5% *
S-2094	DI	RIM = 995.43' INV OUT = 991.49' (E)	S-2092 0.5% *

STRUCTURE TABLE C-124

STRUCTURE NAME	STRUCTURE TYPE	STRUCTURE DETAIL	OPPOSITE STURCTURES & PIPE SLOPES
S-2080	NEW TRENCH DRAIN	RIM = 1004.41' INV OUT = 998.80' (SW)	S-2092 6.8% *
S-2092	DI	RIM = 994.87' INV IN = 990.78' (W) INV IN = 990.80' (NE) INV OUT = 990.78' (SE)	S-2094 0.5% * S-2096 0.5% * S-2080 6.8% *
S-2096	HW	INV IN = 990.40' (NW)	S-2092 0.5% *
S-2120	DI (6'x2.9')	RIM = 994.79' INV IN = 990.60' (SE) INV IN = 990.60' (SE) INV IN = 978.34' (W) INV OUT = 978.30' (S)	S-2125 0.4% S-2122 UNK S-2130 1.2% S-2110 2.6%
S-2122	PIPE	INV OUT = UNK (NW)	S-2120 UNK
S-2130	JB	RIM = 990.53' INV IN = 975.40' (N) INV IN = 975.50' (W) INV OUT = 975.10' (S)	S-2120 1.2% S-2140 1.0% S-2135 2.1%
S-2135	DI (6'x2.9')	RIM = 989.81' INV OUT = 976.10' (E)	S-2130 2.1%
S-2140	HW	INV IN = 971.06' (N)	S-2130 1.0%

STRUCTURE TABLE C-125

STRUCTURE NAME	STRUCTURE TYPE	STRUCTURE DETAIL	OPPOSITE STURCTURES & PIPE SLOPES
S-2123	PIPE	INV OUT = UNK (NE)	S-2125 UNK
S-2124	PIPE	INV OUT = UNK (N)	S-2125 UNK
S-2125	JB	RIM = 996.83' INV IN = 991.30' (S) INV IN = 992.60' (SW) INV IN = 992.60' (S) INV OUT = 991.30' (NW)	S-2128 0.4% S-2120 0.4% S-2123 UNK S-2124 UNK
S-2126	PIPE	INV OUT = UNK (S)	S-2128 UNK
S-2127	PIPE	INV OUT = UNK (SW)	S-2128 UNK
S-2128	JB	RIM = 996.70' INV IN = 993.90' (N) INV IN = 993.90' (NE) INV OUT = 990.90' (N)	S-2125 0.4% S-2126 UNK S-2127 UNK
S-2214	NEW JB W/ AIRCRAFT LOAD	RIM = 988.90' INV IN = 963.54' (N) INV OUT = 963.54' (S)	S-2212 1.2% * S-2230 1.3% *
S-2230	JB	RIM = 987.15' INV IN = 962.10' (N) INV IN = 964.20' (E) ABANDONED PIPE (N) INV OUT = 962.00' (S)	S-2214 1.3% S-2240 1.8% S-2232 3.0%
S-2232	DI (6'x2.9')	RIM = 984.39' INV IN = 979.40' (SW) INV OUT = 967.00' (W)	S-2235 5.7% S-2230 3.0%
S-2233	PIPE	INV OUT = UNK (NE)	S-2235 UNK
S-2234	PIPE	INV OUT = UNK (NW)	S-2235 UNK
S-2235	JB	RIM = 987.62' INV IN = 984.60' (SW) INV IN = 984.60' (SE) INV OUT = 982.60' (NE)	S-2233 UNK S-2234 UNK S-2232 5.7%
S-2240	JB	RIM = 983.64' INV IN = 958.60' (N) INV IN = 973.60' (W) INV IN = 980.60' (N) INV OUT = 958.60' (SE)	S-2230 1.8% S-2250 1.1% S-2245 4.9% S-2244 4.6%
S-2242	PIPE	INV OUT = UNK (SW)	S-2244 UNK
S-2243	PIPE	INV OUT = UNK (SE)	S-2244 UNK
S-2244	JB	RIM = 987.57' INV IN = 984.60' (NW) INV IN = 983.40' (NE) INV OUT = 983.20' (S)	S-2243 UNK S-2242 UNK S-2240 4.6%
S-2245	DI (6'x2.9')	RIM = 982.39' INV OUT = 977.00' (E)	S-2240 4.9%
S-2500	DI	RIM = 973.56' INV OUT = 967.55' (SW)	S-2510 0.5%
S-2611	DI	RIM = 977.03' INV OUT = 974.20' (SW)	S-2613 1.2%
S-2612	DI	RIM = 977.05' INV OUT = 974.30' (S)	S-2613 1.4%

NOTES:

* NEW PIPE INSTALLATION. SEE STORM SEWER PROFILES (C-200 SHEETS).

** VERIFY INVERT OF EXISTING PIPE(S) PRIOR TO REPAIR.

UNK = UNKNOWN

US Army Corps of Engineers®
Louisville District

TANYA NORMAN, P.E.
P.E. No. 0038055, GA

GEORGIA REGISTERED No. PE0038055 PROFESSIONAL ENGINEER TANYA L. NORMAN

DATE: 01/09/2026

MARK	DESCRIPTION	DATE

DESIGNED BY: T. NORMAN
DRAWN BY: J.P. ARISTIZABAL
CHECKED BY: D.M. LECKIE
SUBMITTED BY: A. DUEHR
SIZE: ANSI D
ISSUE DATE: JANUARY 9, 2026
SOLICITATION NO.:
CONTRACT NO.:
FILE NUMBER: 1230216
FILE NAME: 470584-C-101(D).dwg

U.S. ARMY CORPS OF ENGINEERS
LOUISVILLE DISTRICT
LOUISVILLE, KENTUCKY 40210-0059

POND
POND & COMPANY
SUITE 500 RIVERWAY LANE
SUITE 1000 ATLANTA, GEORGIA 30092
PHONE (678) 336-7150
POND.COM

REPAIR & MAINTAIN AIRFIELD STORMWATER SYSTEM
PHASE II
DOBBINS AIR RESERVE BASE, GEORGIA
PROJECT NO.: FGWB 21-0002 & FGWB 25-0006
P2#: 470584

STRUCTURE TABLES

SHEET ID
C-605

CERTIFIED FINAL

FILE PATH: X:\FY23\123021804.CAD BIM\04.02.CAD_PH 2 SHEETS\470584-C-101(D) PLOTTED: 01/09/2026 BY: NORMAN, TANYA

STRUCTURE TABLE C-126

STRUCTURE NAME	STRUCTURE TYPE	STRUCTURE DETAIL	OPPOSITE STURCTURES & PIPE SLOPES
S-2331	HW	INV OUT = 943.10' (S)	S-2332 1.0%
S-2332	JB	RIM = 949.42' INV IN = 942.50' (N) INV OUT = 942.40' (E)	S-2331 1.0% S-2334 1.4%
S-2333	HW	INV OUT = 947.60' (S)	S-2334 5.2%
S-2334	JB	RIM = 952.98' INV IN = 942.60' (N) INV IN = 941.70' (W) INV OUT = 941.70' (S)	S-2333 5.2% S-2335 0.3% S-2332 1.4%
S-2335	HW	INV IN = 942.30' (N)	S-2334 0.3%

STRUCTURE TABLE C-127

STRUCTURE NAME	STRUCTURE TYPE	STRUCTURE DETAIL	OPPOSITE STURCTURES & PIPE SLOPES	
S-2510	JB	RIM = 972.39' INV IN = 967.00' (NE) INV OUT = 966.10' (SW)	S-2500 0.5% S-2520 0.1%	**
S-2520	JB	RIM = 973.11' INV IN = 966.20' (NE) INV IN = 968.10' (SE) INV OUT = 966.00' (W)	S-2510 0.1% S-2530 4.6% S-2521 0.5%	**
S-2521	PIPE	INV OUT = 968.37' (NW)	S-2520 0.5%	
S-2530	DI	RIM = 968.34' INV IN = 963.80' (E) INV IN = 962.10' (N) INV OUT = 962.10' (S)	S-2520 4.6% S-2540 0.3% S-2531 0.8%	
S-2531	HW	INV OUT = 962.25' (S)	S-2530 0.8%	
S-2540	JB	RIM = 973.06' INV IN = 962.60' (N) INV IN = 966.50' (SW) INV IN = 961.10' (W) INV OUT = 961.60' (SE)	S-2530 0.3% S-2545 1.4% S-2543 25.0% S-2541 1.3%	**
S-2541	JB	RIM = 965.42' INV IN = 963.21' (W) INV OUT = 961.71' (E)	S-2542 1.0% S-2540 1.3%	
S-2542	DI	RIM = 966.40' INV OUT = 964.19' (E)	S-2541 1.0%	
S-2543	YI	RIM = 994.55' INV OUT = 986.60' (NE)	S-2540 25.0%	**
S-2545	HW	INV IN = 960.40' (NW)	S-2540 1.4%	

STRUCTURE TABLE C-128

STRUCTURE NAME	STRUCTURE TYPE	STRUCTURE DETAIL	OPPOSITE STURCTURES & PIPE SLOPES	
S-2250	HW	INV IN = 952.10' (NW)	S-2240 1.1%	
S-2260	PIPE END	INV OUT = 950.30' (SW)	S-2270 2.5%	
S-2261	FES	INV OUT = 961.60' (E)	S-2262 2.9%	
S-2262	PIPE	INV IN = 960.70' (W)	S-2261 2.9%	
S-2263	HW	INV OUT = 960.60' (E)	S-2264 20.4%	**
S-2264	PIPE	INV IN = 951.90' (W)	S-2263 20.4%	**
S-2270	PIPE END	INV IN = 949.20' (NE)	S-2260 2.5%	
S-2280	PIPE END	INV IN = 947.40' (W)	S-2290 0.7%	
S-2290	PIPE END	INV OUT = 947.70' (E)	S-2280 0.7%	
S-2300	HW	INV OUT = 946.90' (SE)	S-2310 3.9%	
S-2310	HW	INV IN = 945.37' (NW)	S-2300 3.9%	
S-2600	HW	INV OUT = 973.08' (W)	S-2610 0.4%	
S-2610	SEDIMENT TANK	RIM = 976.09' INV IN = 973.26' (E) INV OUT = 967.19' (W)	S-2600 0.4% S-2620 5.1%	
S-2613	DI	RIM = 977.36' INV IN = 973.60' (N) INV IN = 973.60' (NE)	S-2612 1.4% S-2611 1.2%	
S-2620	DI (9.2'x3.7')	RIM = 972.42' INV IN = 969.10' (E) INV OUT = 967.30' (W)	S-2610 5.1% S-2630 0.1%	**
S-2630	GI	RIM = 974.21' INV IN = 967.20' (E) INV OUT = 967.20' (W)	S-2620 0.1% S-2640 0.8%	**
S-2640	YI	RIM = 973.03' INV IN = 965.90' (E) INV OUT = 965.46' (SW)	S-2630 0.8% S-2650 0.1%	**
S-2650	SWCB	RIM = 971.71' INV IN = 965.60' (NE) INV IN = 967.10' (W) INV OUT = 968.40' (S)	S-2640 0.1% S-2660 0.9% S-2651 2.3%	**
S-2651	DI	RIM = 973.31' INV IN = 971.50' (NW) INV OUT = 968.20' (E)	S-2652 0.5% S-2650 2.3%	
S-2652	PIPE	INV OUT = 971.57' (SE)	S-2651 0.5%	
S-2660	SWCB	RIM = 96779.47' INV IN = 967.80' (N) INV IN = 967.80' (W) INV OUT = 964.40' (SW)	S-2650 0.9% S-2670 0.6% S-2661 0.6%	
S-2661	SWCB	RIM = 973.39' INV OUT = 967.50' (E)	S-2660 0.6%	
S-2670	GI	RIM = 970.80' INV IN = 963.80' (NE) INV OUT = 963.20' (S)	S-2660 0.6% S-2680 4.1%	

STRUCTURE TABLE C-128

STRUCTURE NAME	STRUCTURE TYPE	STRUCTURE DETAIL	OPPOSITE STURCTURES & PIPE SLOPES
S-2680	HW	INV IN = 960.94' (N)	S-2670 4.1%
S-2690	CB	RIM = 966.85' INV OUT = 962.14' (SW)	S-2695 7.1%
S-2695	HW	INV IN = 959.15' (NE)	S-2690 7.1%
S-2700	GI	RIM = 969.83' INV OUT = 964.03' (SE)	S-2710 1.3%
S-2710	GI	RIM = 968.74' INV IN = 962.24' (NW) INV OUT = 962.14' (SE)	S-2700 1.3% S-2720 1.1%
S-2720	GI	RIM = 968.16' INV IN = 960.46' (NW) INV OUT = 960.36' (SE)	S-2710 1.1% S-2730 0.8%
S-2730	GI	RIM = 965.32' INV IN = 959.52' (NW) INV OUT = 958.82' (SE)	S-2720 0.8% S-2740 2.1%
S-2740	JB	RIM = 965.03' INV IN = 957.63' (NW) INV OUT = 953.73' (S)	S-2730 2.1% S-2760 5.7%
S-2760	HW	INV IN = 944.88' (N)	S-2740 5.7%
S-2800	HW	INV IN = 944.93' (SW)	S-2805 0.5%
S-2810	HW	INV IN = 944.97' (SW)	S-2815 0.5%
S-2820	HW	INV IN = 944.91' (SW)	S-2825 0.5%
S-2830	HW	INV IN = 944.91' (SW)	S-2835 0.5%

STRUCTURE TABLE C-129

STRUCTURE NAME	STRUCTURE TYPE	STRUCTURE DETAIL	OPPOSITE STURCTURES & PIPE SLOPES
S-2311	PIPE	INV OUT = 943.78' (NW)	S-2312 0.5%
S-2312	HW	INV IN = 943.60' (SE)	S-2311 0.5%
S-2320	HW	INV OUT = 946.50' (SE)	S-2330 3.0%
S-2330	JB	RIM = 949.75' INV IN = 945.00' (NW) INV OUT = 944.60' (SE)	S-2320 3.0% S-2340 2.6%
S-2340	NEW HEADWALL AT END OF PIPE	INV IN = 943.80' (NW)	S-2330 2.6%

STRUCTURE TABLE C-130

STRUCTURE NAME	STRUCTURE TYPE	STRUCTURE DETAIL	OPPOSITE STURCTURES & PIPE SLOPES
S-2805	HW	INV OUT = 948.55' (NE)	S-2800 0.5%
S-2815	HW	INV OUT = 948.66' (NE)	S-2810 0.5%
S-2825	HW	INV OUT = 948.55' (NE)	S-2820 0.5%
S-2835	HW	INV OUT = 948.50' (NE)	S-2830 0.5%

NOTES:
* NEW PIPE INSTALLATION. SEE STORM SEWER PROFILES (C-200 SHEETS).
** VERIFY INVERT OF EXISTING PIPE(S) PRIOR TO REPAIR.
UNK = UNKNOWN

US Army Corps of Engineers®
Louisville District

TANYA NORMAN, P.E.
P.E. No. 0038055, GA
GEORGIA REGISTERED No. PE0038055 PROFESSIONAL ENGINEER TANYA L. NORMAN
DATE: 01/09/2026

MARK	DESCRIPTION	DATE

DESIGNED BY: T. NORMAN
DRAWN BY: J.P. ARISTIZABAL
CHECKED BY: D.M. LECKIE
SUBMITTED BY: A. DUEHR
SIZE: ANSI D
ISSUE DATE: JANUARY 9, 2026
SOLICITATION NO.:
CONTRACT NO.:
FILE NUMBER: 423021B
FILE NAME: 470584-C-101(D).dwg

U.S. ARMY CORPS OF ENGINEERS
LOUISVILLE DISTRICT
LOUISVILLE, KENTUCKY 40210-0059

POND
3335 PERIMETER HILL DRIVE, SUITE 300
NASHVILLE, TENNESSEE 37211
PHONE (615) 329-2743
FAX (615) 329-2740
POND

REPAIR & MAINTAIN AIRFIELD STORMWATER SYSTEM
PHASE II
DOBBINS AIR RESERVE BASE, GEORGIA
PROJECT NO.: FGWB 21-0002 & FGWB 25-0006
P2#: 470584

STRUCTURE TABLES

SHEET ID
C-606

CERTIFIED FINAL

FILE PATH: X:\PY23\123021B\04.CAD BIM\04.02.CAD_PH 2 SHEETS\470584-C-101(D) PLOTTED: 01/09/2026 BY: NORMAN, TANYA