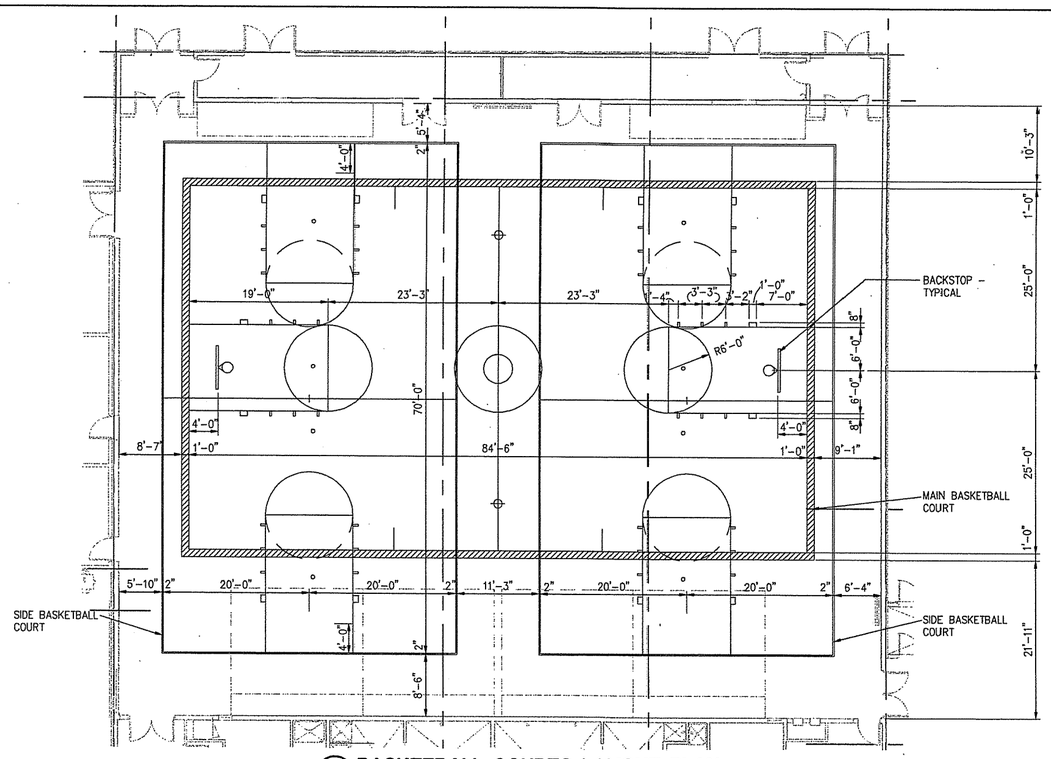

2 BASKETBALL COURTS LAYOUT PLAN
A4.3|A4.3 SCALE: 1/8"=1'-0"

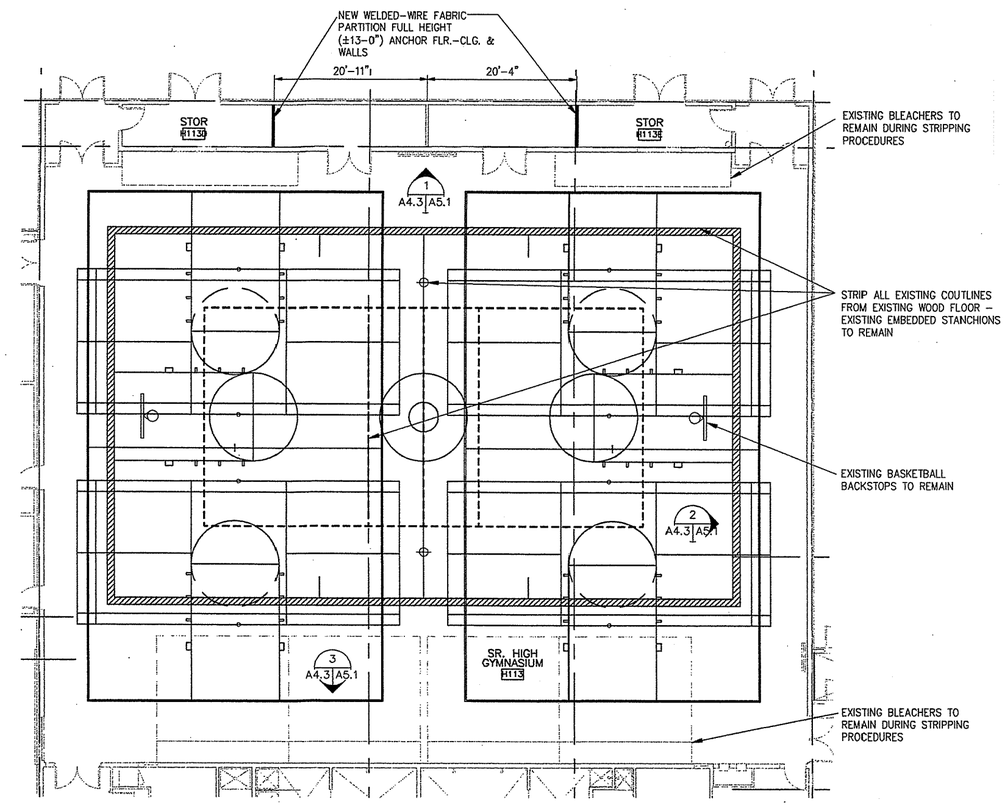

NOTE: FOR NEW COURTLINE LAYOUTS SEE PLANS 2/A4.3 AND 3/A4.3

1 GYMNASIUM FLOOR PLAN
A2.1|A4.3 SCALE: 1/8"=1'-0"

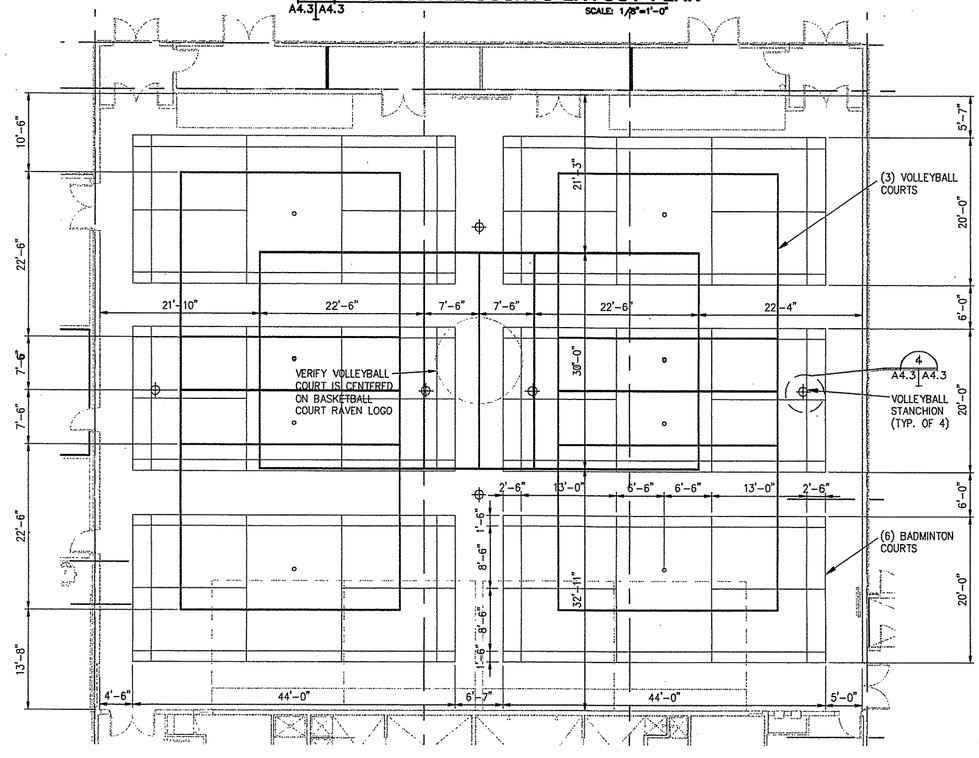

3 VOLLEYBALL/BADMINTON LAYOUT PLAN
A4.3|A4.3 SCALE: 1/8"=1'-0"

NOTES ON COURTS LAYOUT:

1. VOLLEYBALL COURTS (30'x60'): COLOR - YELLOW; LINE WIDTH: 1".
2. BADMINTON COURTS (20'x44'): COLOR - GREEN; LINE WIDTH: 1". COURT LAYOUT SHALL CONFORM TO THE RULES OF THE DIVISION FOR GIRLS AND WOMEN'S SPORTS.
3. VOLLEYBALL COURTS LAYOUTS SHALL CONFORM TO THE RULES OF THE NATIONAL FEDERATION OF STATE HIGH SCHOOL ASSOCIATION.
4. MAIN BASKETBALL COURT (50'x84'-6"): COLOR - BLACK W/ WHITE LANE SPACE MARKS & NEUTRAL ZONE MARKS, PERIMETER LINE WIDTH: 12". OTHER MAIN BASKETBALL COURT MARKING WIDTH: 2".
5. SIDE BASKETBALL COURTS (40'x70'): COLOR - BLUE W/ WHITE LANE SPACE MARKS & NEUTRAL ZONE MARKS. PERIMETER LINE WIDTH: 3".

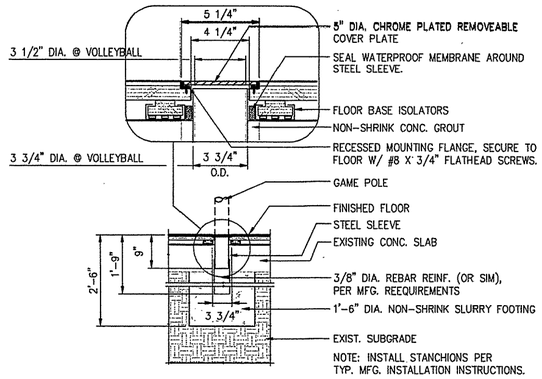

NOTE: INSTALL STANCHIONS PER TYP. MFG. INSTALLATION INSTRUCTIONS.

4 TYP. STANCHION DETAIL
A4.4|A4.3 SCALE: 3/4" = 1'-0"

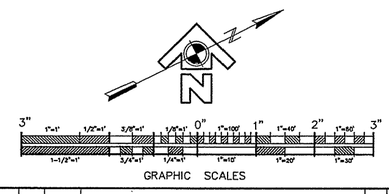

REV.	DATE	C.O.	ACTION	DESCRIPTION	BY	APP'D.

CONTRACTOR _____ CONTRACT NO. _____
CITY _____ STATE _____

RECOMMENDED: (PRIME CONTRACTOR) APPROVED: (RESIDENT ENGINEER) DATE:

USKH — A quarter century of design for Alaskans

ALASKA DISTRICT
CORPS OF ENGINEERS
ANCHORAGE, ALASKA

DESIGNED: HAP
DRAWN: MAF
TRACED:
CHECKED: JAH
SUBMITTED:
GL SECT.

BEN EIELSON JR./SR. HIGH SCHOOL - PHASE 3
EIELSON AIR FORCE BASE, ALASKA
ARCHITECTURAL
SR. HIGH GYMNASIUM FLOOR PLANS

RECOMMENDED: (CHIEF, MILITARY TECHNICAL ENGINEERING BRANCH) APPROVED: (CHIEF ENGINEERING DIVISION) DATE:

SCALE: AS SHOWN SPEC. NO.
DRAWING NUMBER 29-02-38
SHEET OF

REFERENCE NO. A4.3