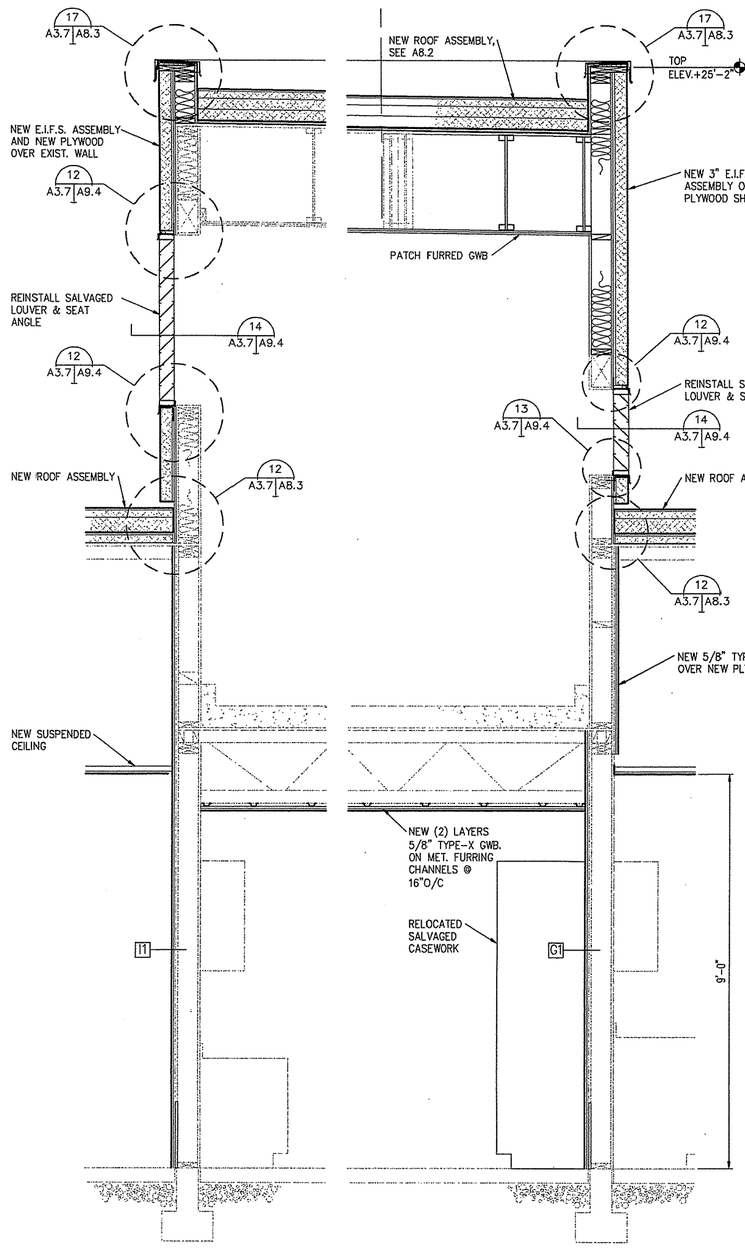

5 WALL SECTION - NEW
A3.4 A2.2 A3.7 SCALE: 3/4"=1'-0"

4 WALL SECTION - NEW
A3.4 A2.2 A3.7 SCALE: 3/4"=1'-0"

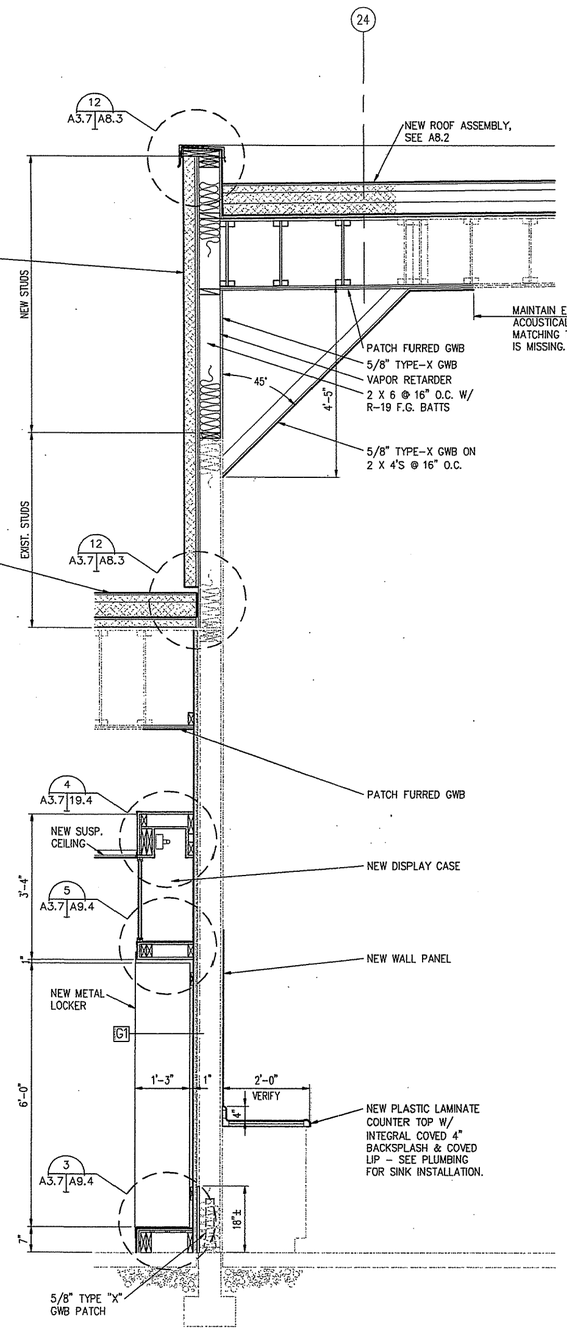

3 WALL SECTION - NEW
A3.4 A2.2 A3.7 SCALE: 3/4"=1'-0"

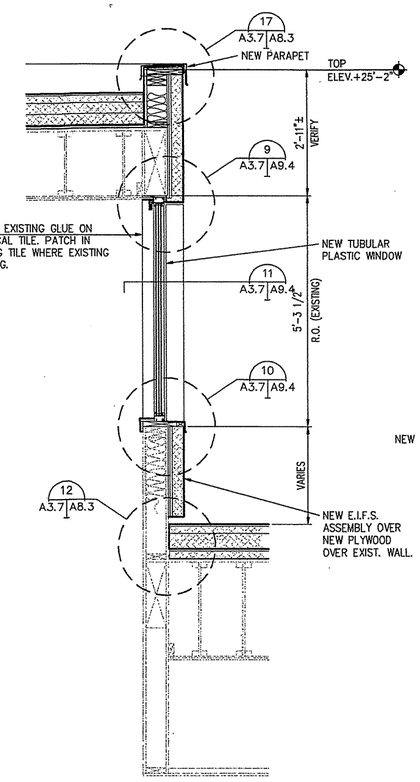

2 WALL SECTION - NEW
A3.4 A2.2 A3.7 SCALE: 3/4"=1'-0"

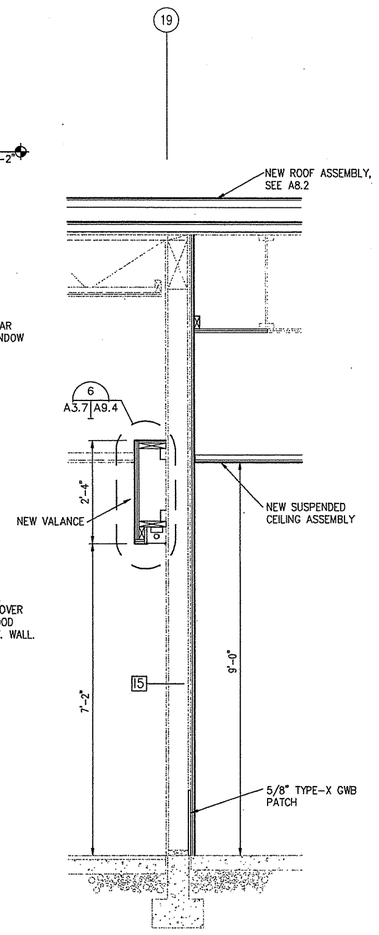

1 WALL SECTION - NEW
A3.4 A2.2 A3.7 SCALE: 3/4"=1'-0"

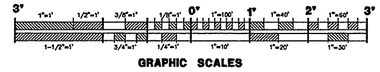

GRAPHIC SCALES

REV.	DATE	C.O.	ACTION	DESCRIPTION	BY	APP'D.

CONTRACT NO.
CONTRACTOR
CITY STATE
RECOMMENDED: PRIME CONTRACTOR
APPROVED: RESIDENT ENGINEER
DATE:

USKH A quarter century of design for Alaskans

ALASKA DISTRICT
CORPS OF ENGINEERS
ANCHORAGE, ALASKA

DESIGNED: HAP
DRAWN: MAF
TRACED:
CHECKED: JAH
SUBMITTED:
CH. SECT.

BEN EIELSON JR./SR. HIGH SCHOOL - PHASE 3
EIELSON AIR FORCE BASE, ALASKA
ARCHITECTURAL

WALL SECTIONS

RECOMMENDED: CHIEF, MILITARY TECHNICAL ENGINEERING BRANCH
APPROVED: CHIEF ENGINEERING DIVISION
DATE:
SCALE: AS SHOWN
SPEC. NO.
DRAWING NUMBER 29-02-38
SHEET OF

REFERENCE NO. A3.7