CORPS OF ENGINEERS

U. S. ARMY

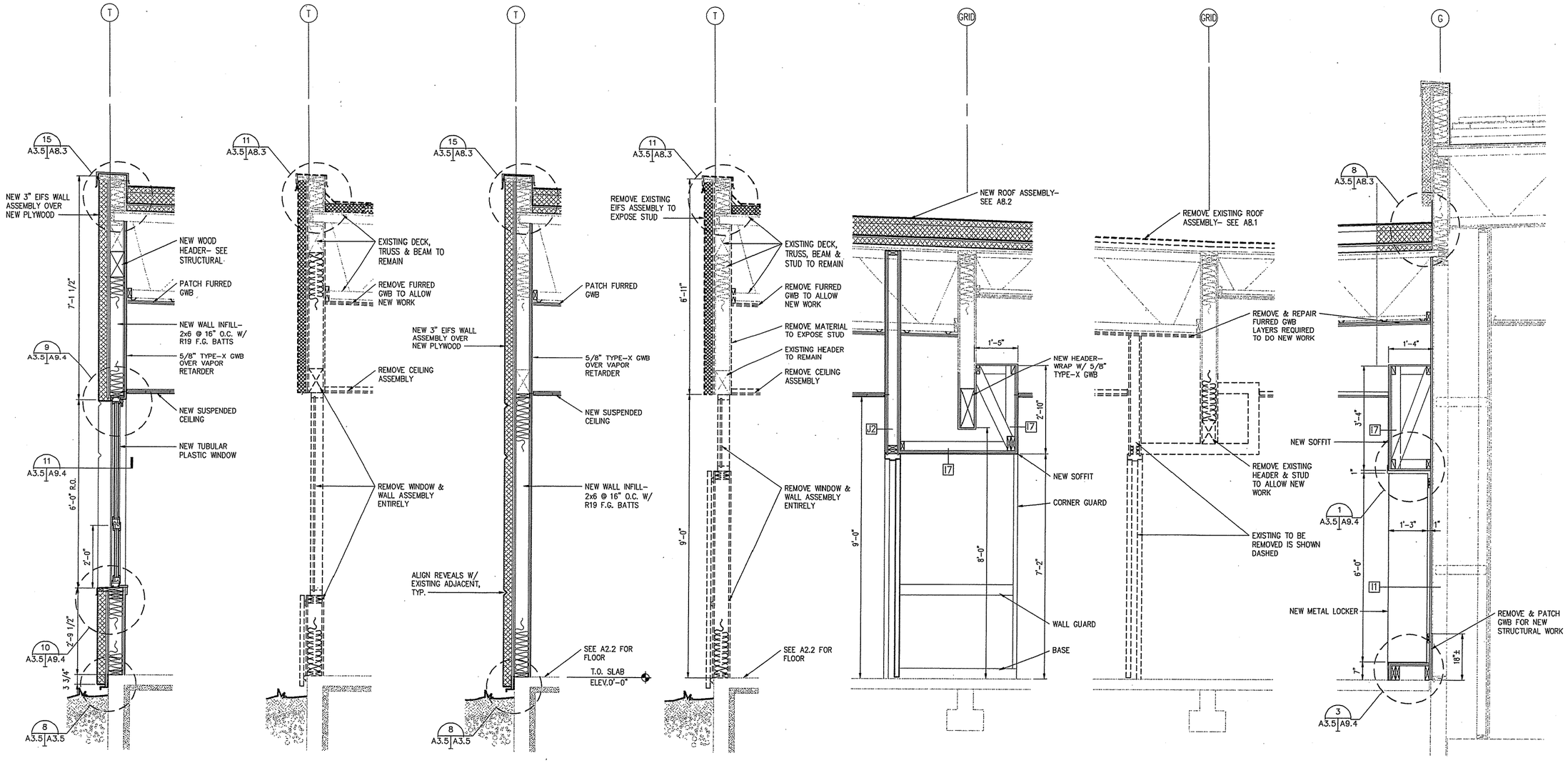

7 WALL SECTION - NEW
A3.4 A3.5 A2.2 A3.2 SCALE: 3/4"=1'-0"

6 WALL SECTION - DEMO
A3.4 A3.5 D2.2 A3.2 SCALE: 3/4"=1'-0"

5 WALL SECTION - NEW
A3.4 A3.5 A2.2 A3.2 SCALE: 3/4"=1'-0"

4 WALL SECTION - DEMO
A3.4 A3.5 D2.2 A3.2 SCALE: 3/4"=1'-0"

3 WALL SECTION - NEW
A3.4 A3.5 A2.2 SCALE: 3/4"=1'-0"

2 WALL SECTION - DEMO
A3.4 A3.5 D2.2 SCALE: 3/4"=1'-0"

1 WALL SECTION
A3.4 A3.5 A2.2 SCALE: 3/4"=1'-0"

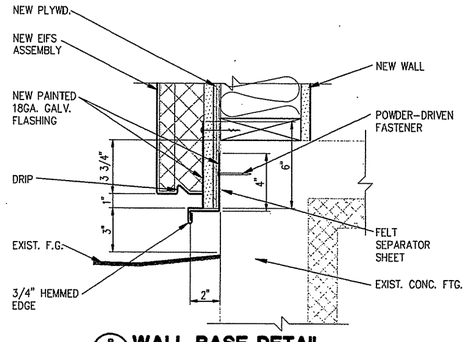

8 WALL BASE DETAIL
A3.5 A3.5 A3.2 SCALE: 3"=1'-0"

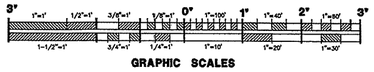

GRAPHIC SCALES

REFERENCE NO. A3.5

REV.	DATE	C.O.	ACTION	DESCRIPTION	BY	APP'D.

CONTRACT NO.

CONTRACTOR

CITY STATE

RECOMMENDED: PRIME CONTRACTOR

APPROVED: RESIDENT ENGINEER

DATE:

USKH A quarter century of design for Alaska

ALASKA DISTRICT CORPS OF ENGINEERS ANCHORAGE, ALASKA

DESIGNED: HAP
DRAWN: MAF
TRACED:
CHECKED: JAH
SUBMITTED:
CH. SECT.

BEN EIELSON JR./SR. HIGH SCHOOL – PHASE 3
EIELSON AIR FORCE BASE, ALASKA
ARCHITECTURAL

WALL SECTIONS

RECOMMENDED: CHIEF, MILITARY TECHNICAL ENGINEERING BRANCH

APPROVED: CHIEF ENGINEERING DIVISION

DATE:

SCALE: AS SHOWN

SPEC. NO.

DRAWING NUMBER 29-02-38

SHEET OF