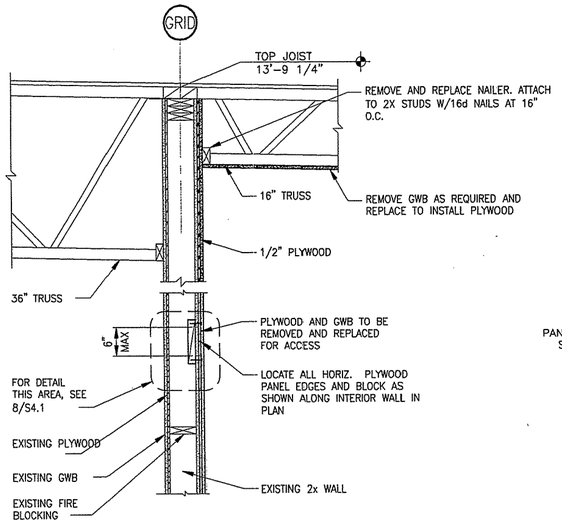

6 S3.1 S4.1 TYPICAL DETAIL

SCALE: 1"=1'-0"

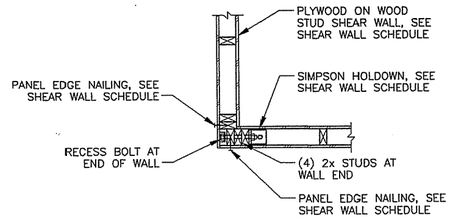

4 S3.1 S4.1 PLAN - TYPICAL END OF SHEAR WALL CONNECTION

SCALE: 1"=1'-0"

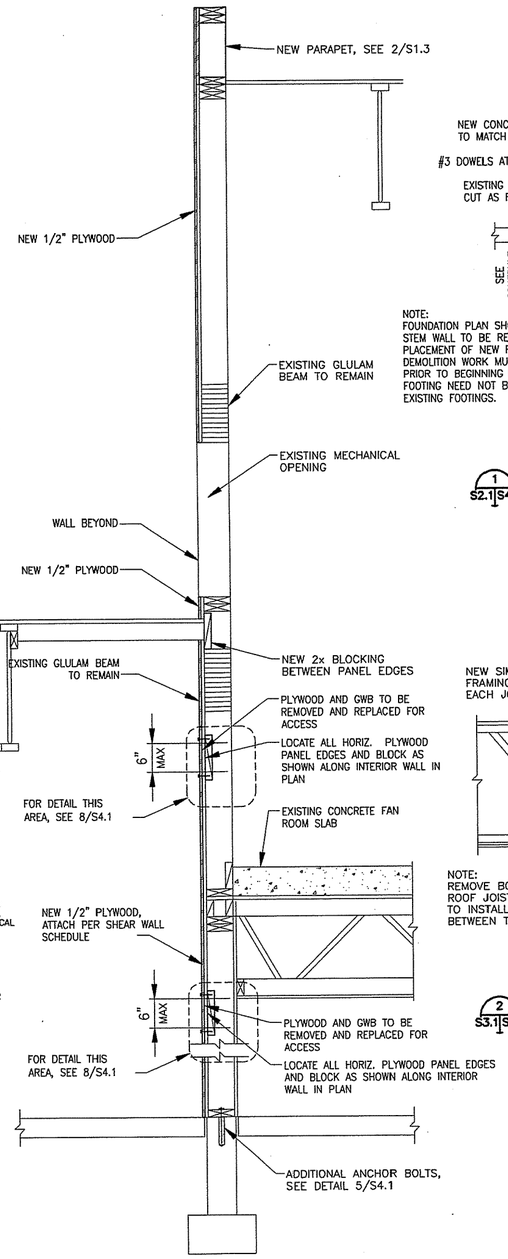

3 S3.1 S4.1 TYPICAL DETAIL

SCALE: 1"=1'-0"

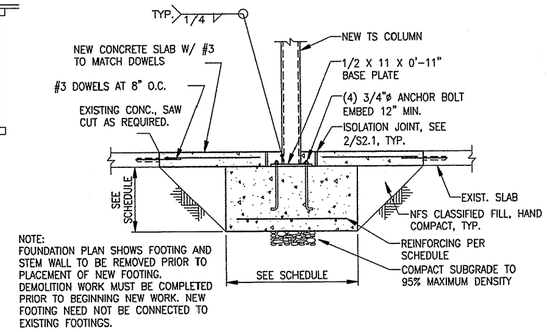

NOTE:
FOUNDATION PLAN SHOWS FOOTING AND STEM WALL TO BE REMOVED PRIOR TO PLACEMENT OF NEW FOOTING. DEMOLITION WORK MUST BE COMPLETED PRIOR TO BEGINNING NEW WORK. NEW FOOTING NEED NOT BE CONNECTED TO EXISTING FOOTINGS.

1 S2.1 S4.1 TYPICAL NEW INTERIOR COLUMN AT FOOTING

SCALE: 3/4"=1'-0"

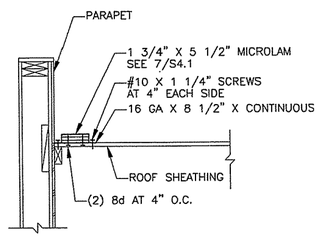

NOTE: AT PARAPET LOCATIONS, INSTALL DRAG STRUT AS SHOWN. AT OTHER LOCATIONS, INSTALL DRAG STRUT AT TOP OF WALL ABOVE ROOF SHEATHING. FOR FRAMING OF PARAPETS, ROOFS, OR WALLS, SEE PLANS AND DETAILS.

7 S3.3 S4.1 TYPICAL DRAGSTRUT AT ROOF

SCALE: NONE

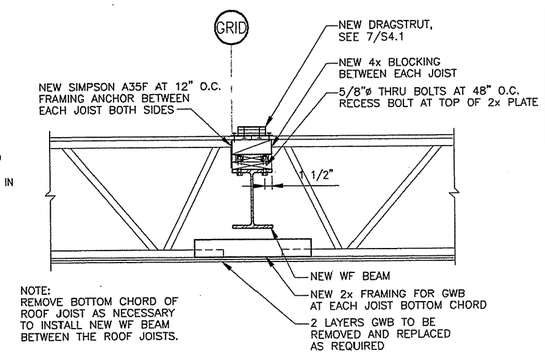

NOTE:
REMOVE BOTTOM CHORD OF ROOF JOIST AS NECESSARY TO INSTALL NEW WF BEAM BETWEEN THE ROOF JOISTS.

2 S3.1 S4.1 NEW BEAM AT EXISTING ROOF JOISTS

SCALE: 1"=1'-0"

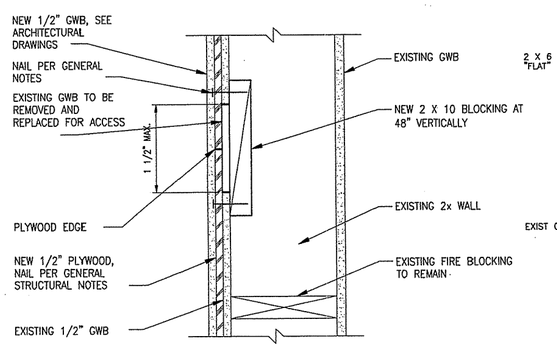

8 S4.1 S4.1 TYPICAL NEW BLOCKING IN EXISTING WALL

SCALE: NONE

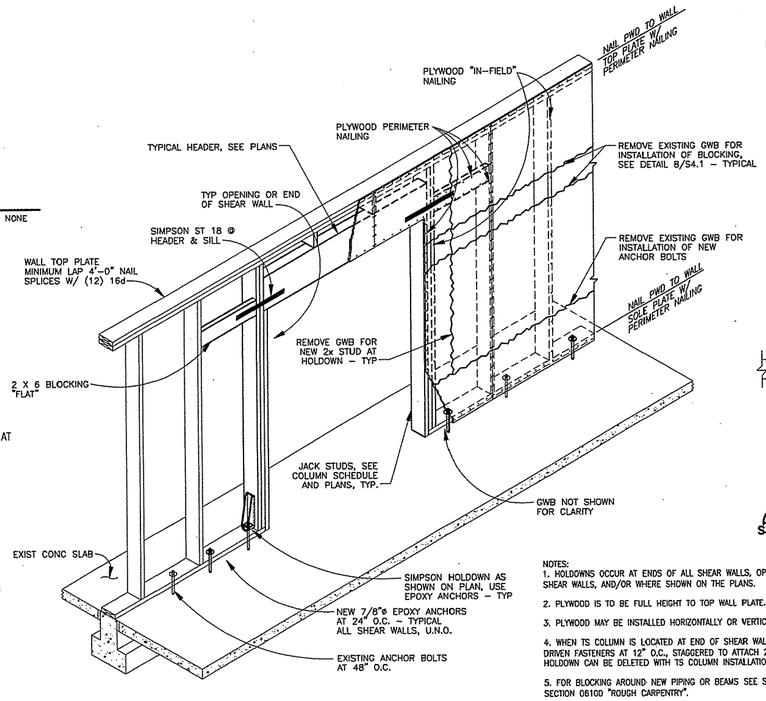

5 S3.1 S4.1 TYPICAL SHEAR WALL DESIGN

SCALE: 1"=1'-0"

NOTES:
1. HOLDOWNS OCCUR AT ENDS OF ALL SHEAR WALLS. OPENINGS IN SHEAR WALLS, AND/OR WHERE SHOWN ON THE PLANS.
2. PLYWOOD IS TO BE FULL HEIGHT TO TOP WALL PLATE.
3. PLYWOOD MAY BE INSTALLED HORIZONTALLY OR VERTICALLY.
4. WHEN TS COLUMN IS LOCATED AT END OF SHEAR WALL, USE POWDER DRIVEN FASTENERS AT 12" O.C., STAGGERED TO ATTACH 2x FRAMING. HOLDOWN CAN BE DELETED WITH TS COLUMN INSTALLATION.
5. FOR BLOCKING AROUND NEW PIPING OR BEAMS SEE SPECIFICATION SECTION 06100 "ROUGH CARPENTRY".
6. IN LIEU OF PARTIAL GWB REMOVAL ON SHEAR WALLS, CONTRACTOR MAY REMOVE ALL GWB TO INSTALL NEW SHEAR WALL COMPONENTS, I.E. BLOCKING, ANCHOR BOLTS, HOLDOWNS, ETC.

GRAPHIC SCALES

REFERENCE NO. S4.1

REV.	DATE	C.O.	ACTION	DESCRIPTION	BY	APP'D.

CONTRACT NO.

CONTRACTOR

CITY STATE

RECOMMENDED: PRIME CONTRACTOR | APPROVED: RESIDENT ENGINEER | DATE:

USKH — A quarter century of design for Alaskans

ALASKA DISTRICT
CORPS OF ENGINEERS
ANCHORAGE, ALASKA

DESIGNED: MNA
DRAWN: DJR
TRACED:
CHECKED: BEH
SUBMITTED:
CH. SECT.

BEN EIELSON JR./SR. HIGH SCHOOL - PHASE 3
EIELSON AIR FORCE BASE, ALASKA
STRUCTURAL
STRUCTURAL DETAILS

RECOMMENDED: CHIEF, MILITARY TECHNICAL ENGINEERING BRANCH | APPROVED: CHIEF ENGINEERING DIVISION | DATE:

SCALE: AS NOTED | SPEC. NO.

DRAWING NUMBER 29-02-38

SHEET OF