CORPS OF ENGINEERS

U. S. ARMY

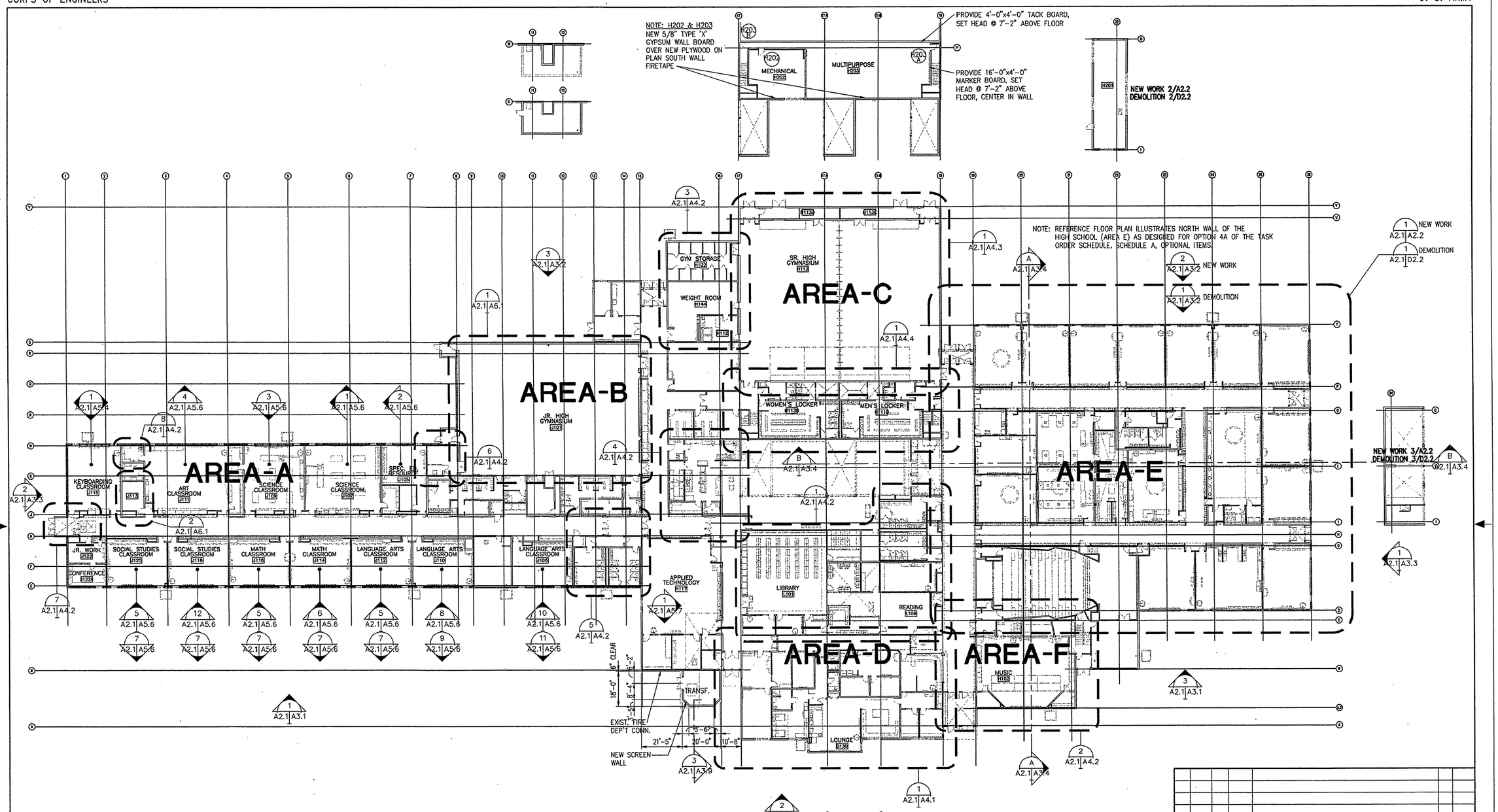

REFERENCE FLOOR PLAN

SCALE: 1"=20'-0"

REV.	DATE	C.O.	ACTION	DESCRIPTION	BY	APP'D.

CONTRACT NO.

CONTRACTOR

CITY STATE

RECOMMENDED: PRIME CONTRACTOR

APPROVED: RESIDENT ENGINEER

DATE:

USKH — A quarter century of design for Alaskans

ALASKA DISTRICT
CORPS OF ENGINEERS
ANCHORAGE, ALASKA

DESIGNED: HAP
DRAWN: MAF
TRACED:
CHECKED: JAH
SUBMITTED:
CH. SECT.

BEN EIELSON JR./SR. HIGH SCHOOL - PHASE 3
EIELSON AIR FORCE BASE, ALASKA
ARCHITECTURAL

REFERENCE FLOOR PLAN

RECOMMENDED: CHIEF, MILITARY TECHNICAL ENGINEERING BRANCH

APPROVED: CHIEF ENGINEERING DIVISION

DATE:

SCALE: 1"=20'-0"

SPEC. NO.

DRAWING NUMBER 29-02-38

SHEET OF

REFERENCE NO. A2.1

CORPS OF ENGINEERS

U. S. ARMY

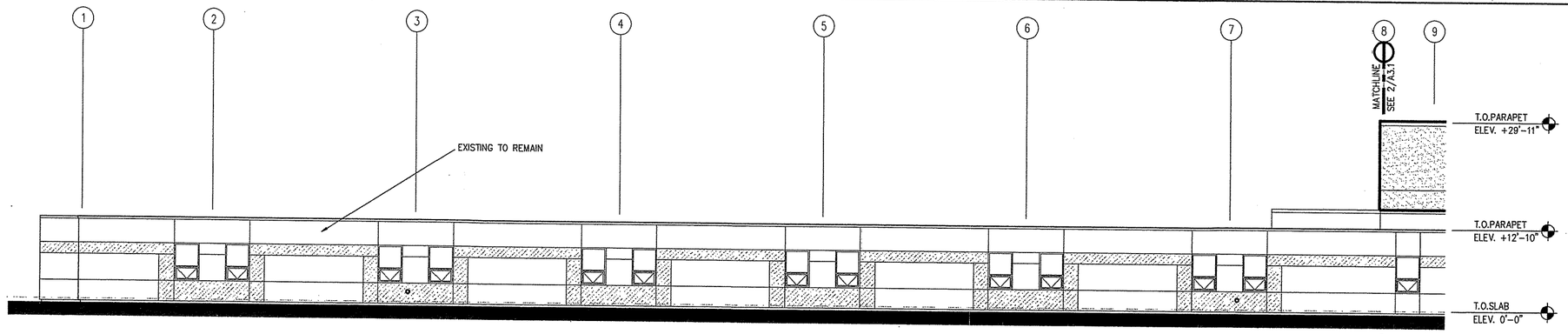

1 A2.1 A3.1 **SOUTH EXTERIOR ELEVATION**

SCALE: 1/8"=1'-0"

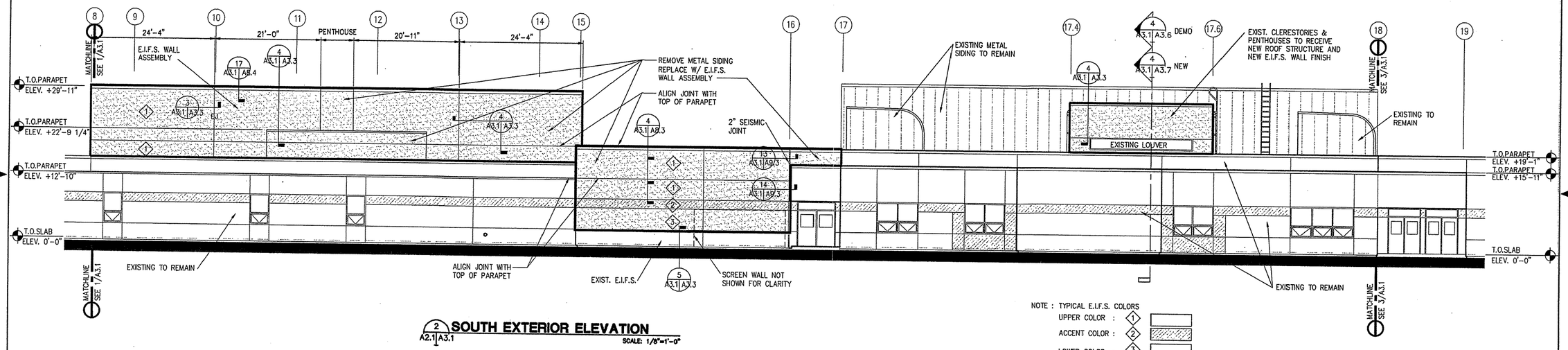

2 A2.1 A3.1 **SOUTH EXTERIOR ELEVATION**

SCALE: 1/8"=1'-0"

NOTE : TYPICAL E.I.F.S. COLORS

UPPER COLOR : 1

ACCENT COLOR : 2

LOWER COLOR : 3

SEE ROOM FINISH SCHEDULE UNSCHEDULED COLORS

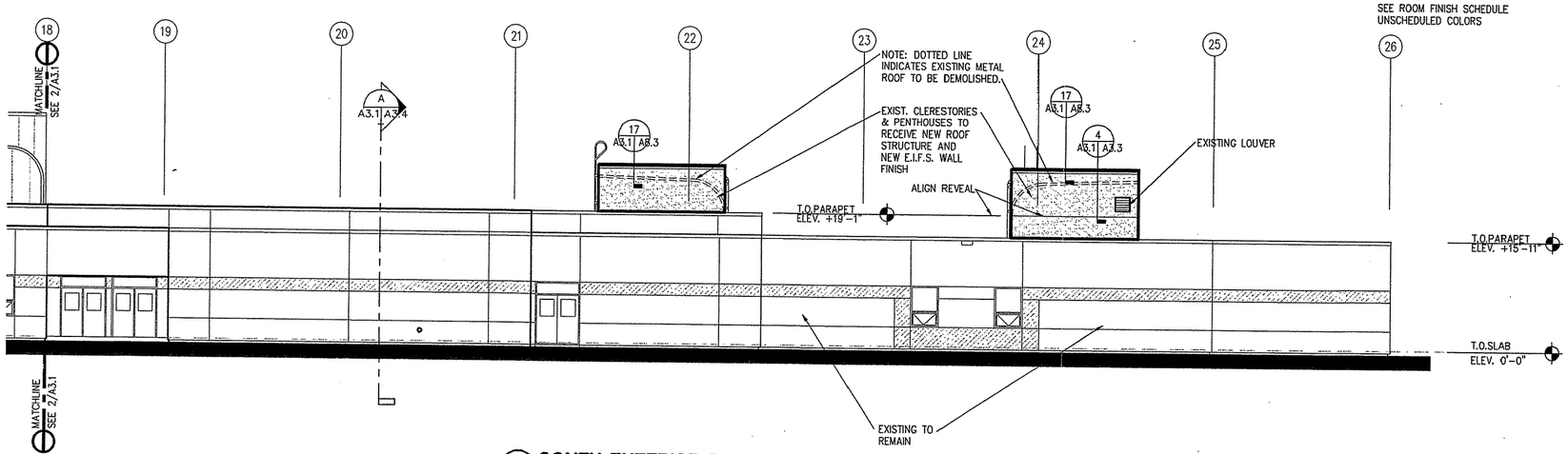

3 A2.1 A3.1 A2.2 **SOUTH EXTERIOR ELEVATION**

SCALE: 1/8"=1'-0"

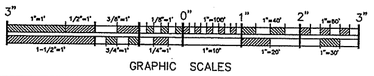

GRAPHIC SCALES

REV.	DATE	C.O.	ACTION	DESCRIPTION	BY	APP'D.

CONTRACT NO. _____

CONTRACTOR _____

CITY _____ STATE _____

RECOMMENDED: PRIME CONTRACTOR | APPROVED: RESIDENT ENGINEER | DATE:

USKH — A quarter century of design for Alaskans

ALASKA DISTRICT
CORPS OF ENGINEERS
ANCHORAGE, ALASKA

DESIGNED: HAP
DRAWN: MAF
TRACED:
CHECKED: JAH
SUBMITTED:
CH. SECT.

BEN EIELSON JR./SR. HIGH SCHOOL – PHASE 3
EIELSON AIR FORCE BASE, ALASKA
ARCHITECTURAL

EXTERIOR ELEVATIONS

RECOMMENDED: CHIEF, MILITARY TECHNICAL ENGINEERING BRANCH | APPROVED: CHIEF ENGINEERING DIVISION | DATE:

SCALE: 1/8"=1'-0" | SPEC. NO.

DRAWING NUMBER 29-02-38

SHEET OF

REFERENCE NO. A3.1

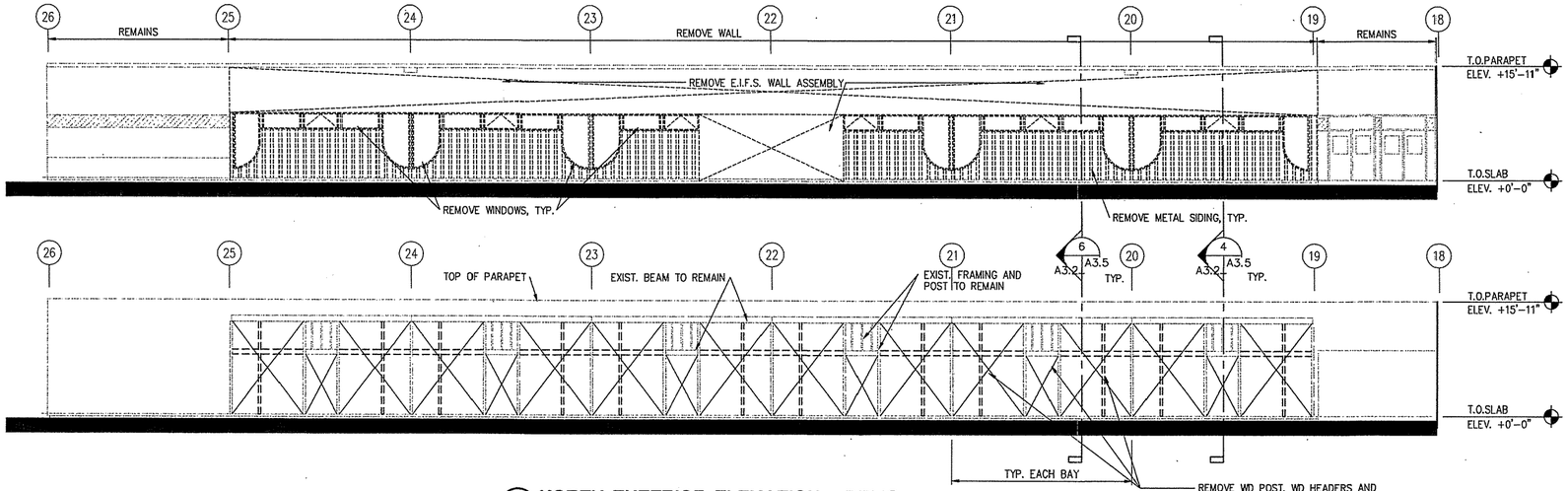

1 NORTH EXTERIOR ELEVATION - DEMO

D2.2 A3.2

SCALE: 1/8"=1'-0"

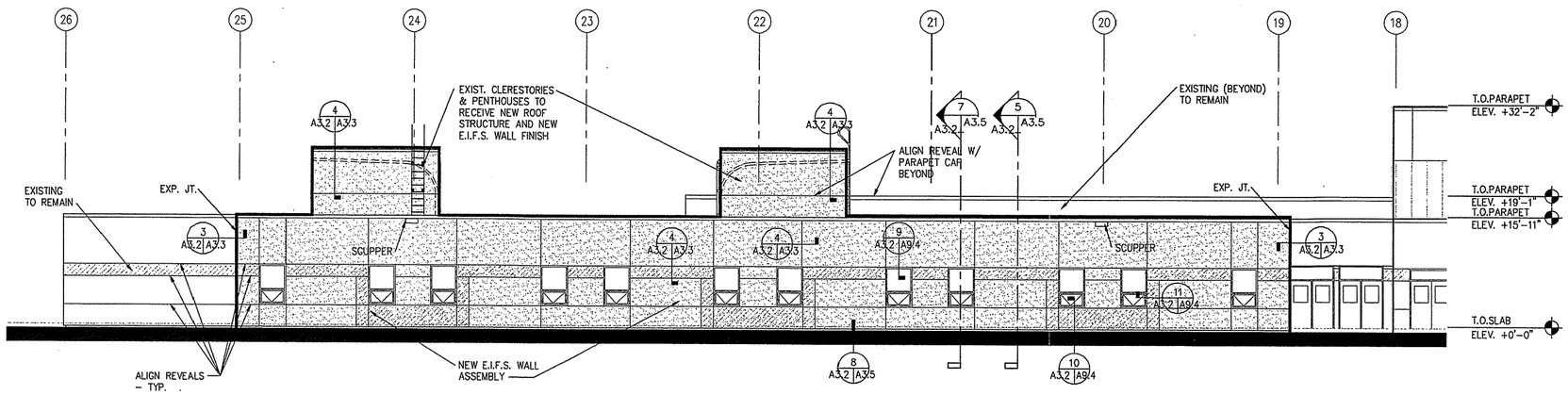

2 NORTH EXTERIOR ELEVATION - NEW WORK

A2.1 A3.2
A2.2

SCALE: 1/8"=1'-0"

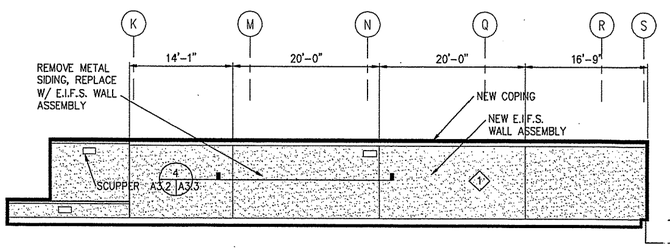

4 EAST SIDE GYMNASUIM ELEVATION

A3.2 A3.2

SCALE: 1/8"=1'-0"

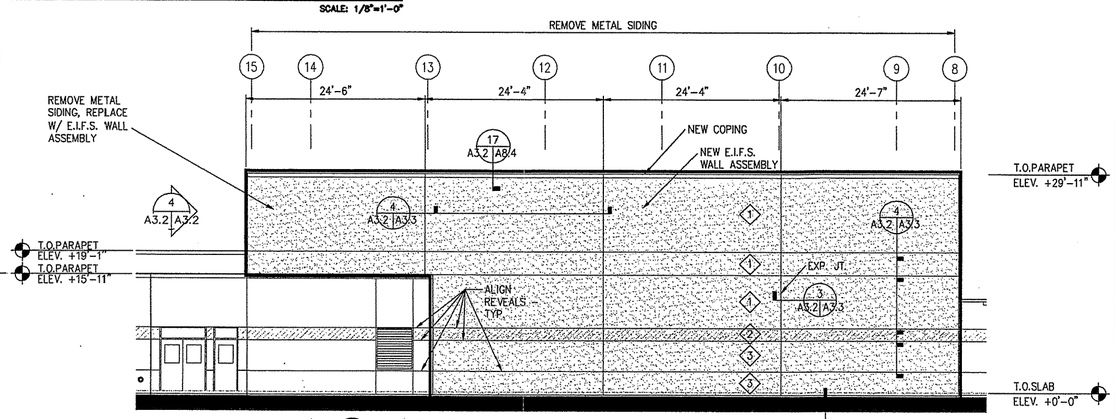

3 NORTH EXTERIOR ELEVATION

A2.1 A3.2

SCALE: 1/8"=1'-0"

NOTES:

1. TYPICAL E.I.F.S. COLORS
   UPPER COLOR : 1
   ACCENT COLOR : 2
   LOWER COLOR : 3
   SEE ROOM FINISH SCHEDULE UNSCHEDULED COLORS

2. THE NORTH EXTERIOR ELEVATION (DETAIL 2/A3.2) ILLUSTRATES NORTH WALL OF THE HIGH SCHOOL (AREA E) AS DESIGNED FOR OPTION 4A OF THE TASK ORDER SCHEDULE, SCHEDULE A, OPTIONAL ITEMS. FOR THE EXISTING EXTERIOR ELEVATION OF THE NORTH WALL, SEE DRAWING SHEET A2.2A (EXISTING NORTH ELEVATION).

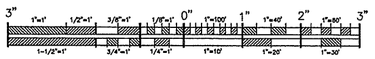

GRAPHIC SCALES

REV.	DATE	C.O.	ACTION	DESCRIPTION	BY	APP'D.

CONTRACTOR _____ CONTRACT NO. _____

CITY _____ STATE _____

RECOMMENDED: PRIME CONTRACTOR | APPROVED: RESIDENT ENGINEER | DATE:

USKH — A quarter century of design for Alaska

ALASKA DISTRICT
CORPS OF ENGINEERS
ANCHORAGE, ALASKA

DESIGNED: HAP
DRAWN: MAF
TRACED:
CHECKED: JAH
SUBMITTED:
SR. SECT.

BEN EIELSON JR./SR. HIGH SCHOOL – PHASE 3
EIELSON AIR FORCE BASE, ALASKA
ARCHITECTURAL

EXTERIOR ELEVATIONS

RECOMMENDED: CHIEF, MILITARY TECHNICAL ENGINEERING BRANCH | APPROVED: CHIEF ENGINEERING DIVISION | DATE:

SCALE: 1/8"=1'-0" | SPEC. NO.

DRAWING NUMBER 29-02-38

SHEET OF

REFERENCE NO. A3.2

CORPS OF ENGINEERS

U. S. ARMY

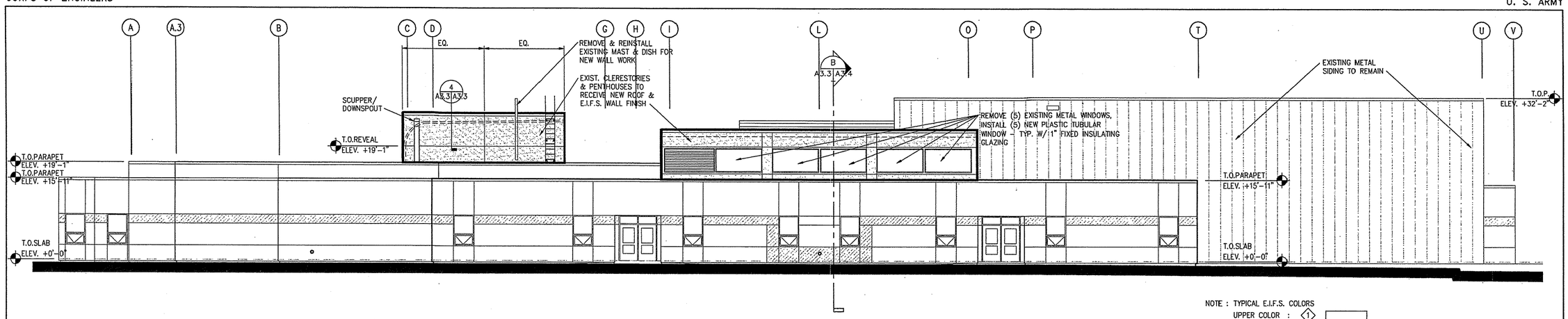

NOTE : TYPICAL E.I.F.S. COLORS
UPPER COLOR : 1
ACCENT COLOR : 2
LOWER COLOR : 3
SEE ROOM FINISH SCHEDULE UNSCHEDULED COLORS

1 EAST EXTERIOR ELEVATION

A2.1 A3.3 A2.2

SCALE: 1/8"=1'-0"

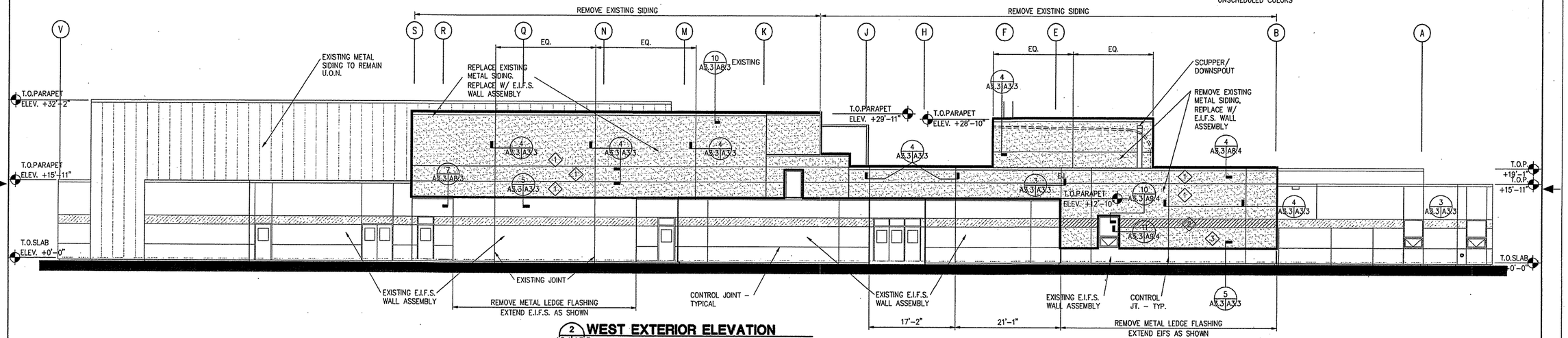

2 WEST EXTERIOR ELEVATION

A2.1 A3.3

SCALE: 1/8"=1'-0"

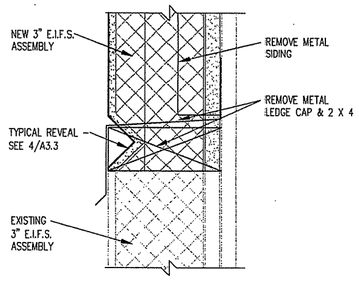

5 TYPICAL TIE-IN JOINT DETAIL

A3.1 A3.3 A3.2 A3.3

HORIZONTAL/VERTICAL

SCALE: 6"=1'-0"

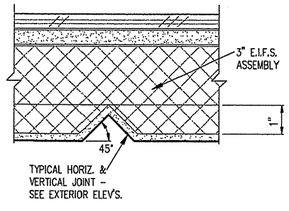

4 TYPICAL CONTROL JOINT DETAIL

A3.1 A3.3 A3.2 A3.3

HORIZONTAL/VERTICAL

SCALE: 6"=1'-0"

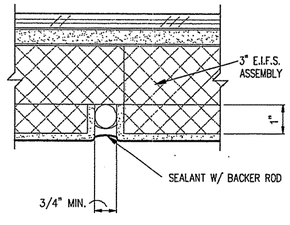

3 EXPANSION JOINT DETAIL

A3.1 A3.3 A3.2 A3.3

HORIZONTAL/VERTICAL

SCALE: 6"=1'-0"

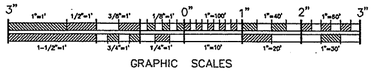

GRAPHIC SCALES

REFERENCE NO. A3.3

REV.	DATE	C.O.	ACTION	DESCRIPTION	BY	APP'D.

CONTRACTOR _____ CONTRACT NO. _____

CITY _____ STATE _____

RECOMMENDED: _____ PRIME CONTRACTOR

APPROVED: _____ RESIDENT ENGINEER

DATE:

USKH — A quarter century of design for Alaskans

ALASKA DISTRICT
CORPS OF ENGINEERS
ANCHORAGE, ALASKA

DESIGNED: HAP
DRAWN: MAF
TRACED:
CHECKED: JAH
SUBMITTED:
CH. SECT.

BEN EIELSON JR./SR. HIGH SCHOOL - PHASE 3
EIELSON AIR FORCE BASE, ALASKA
ARCHITECTURAL

EXTERIOR ELEVATIONS

RECOMMENDED: _____ CHIEF, MILITARY TECHNICAL ENGINEERING BRANCH

APPROVED: _____ CHIEF ENGINEERING DIVISION

DATE:

SCALE: 1/8"=1'-0"

SPEC. NO.

DRAWING NUMBER 29-02-38

SHEET OF

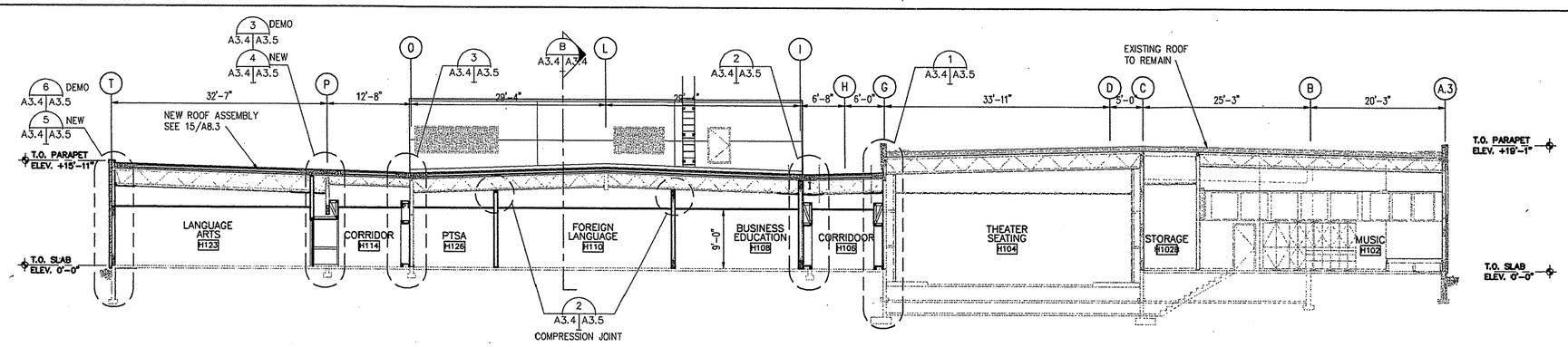

A BUILDING SECTION "A"
A2.1 A3.4 A2.2
SCALE: 1/8"=1'-0"

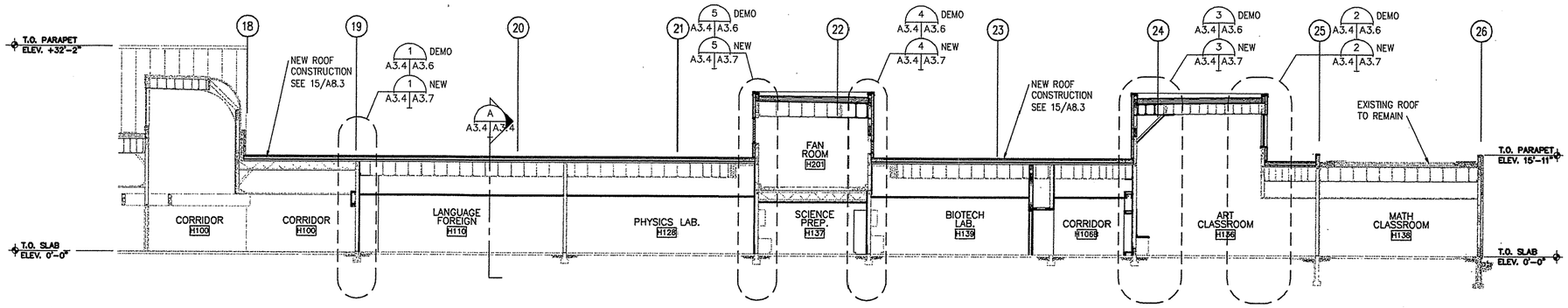

B BUILDING SECTION "B"
A2.1 A3.4 A2.2
SCALE: 1/8"=1'-0"

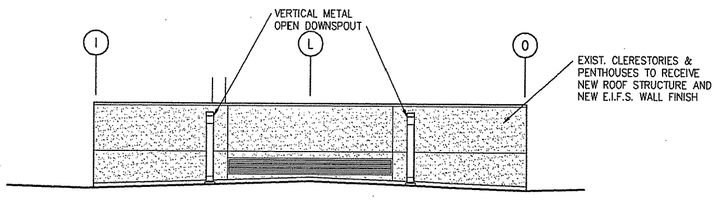

1 PARTIAL EAST EXTERIOR ELEVATION
A2.1 A3.4
SCALE: 1/8"=1'-0"

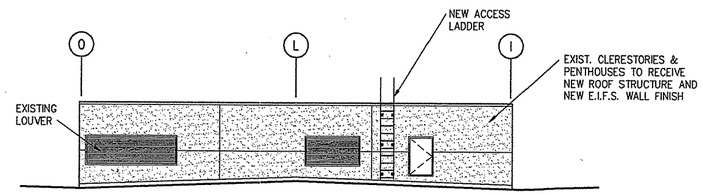

2 PARTIAL WEST EXTERIOR ELEVATION
A2.1 A3.4
SCALE: 1/8"=1'-0"

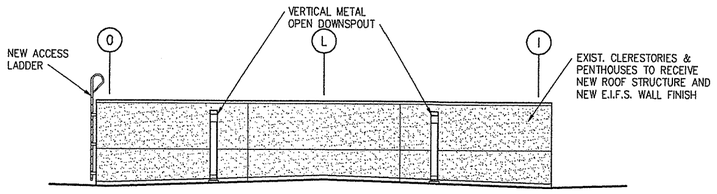

3 PARTIAL WEST EXTERIOR ELEVATION
A2.1 A3.4
SCALE: 1/8"=1'-0"

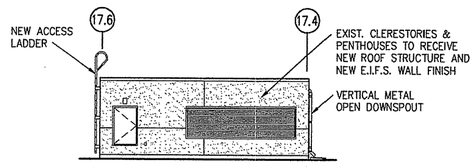

4 PARTIAL NORTH EXTERIOR ELEVATION
A2.1 A3.4
SCALE: 1/8"=1'-0"

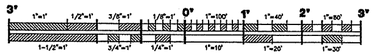

REV.	DATE	C.O.	ACTION	DESCRIPTION	BY	APP'D.

CONTRACTOR _____ CONTRACT NO. _____
CITY _____ STATE _____

RECOMMENDED: _____ PRIME CONTRACTOR
APPROVED: _____ RESIDENT ENGINEER
DATE:

USKH — A quarter century of design for Alaskans

ALASKA DISTRICT
CORPS OF ENGINEERS
ANCHORAGE, ALASKA

DESIGNED: HAP
DRAWN: MAF
TRACED:
CHECKED: JAH
SUBMITTED:
CH. SECT.

BEN EIELSON JR./SR. HIGH SCHOOL – PHASE 3
EIELSON AIR FORCE BASE, ALASKA
ARCHITECTURAL

BUILDING SECTIONS

RECOMMENDED: _____ CHIEF, MILITARY TECHNICAL ENGINEERING BRANCH
APPROVED: _____ CHIEF ENGINEERING DIVISION
DATE:

SCALE: AS SHOWN
SPEC. NO.
DRAWING NUMBER 29-02-38
SHEET OF

REFERENCE NO. A3.4

CORPS OF ENGINEERS

U. S. ARMY

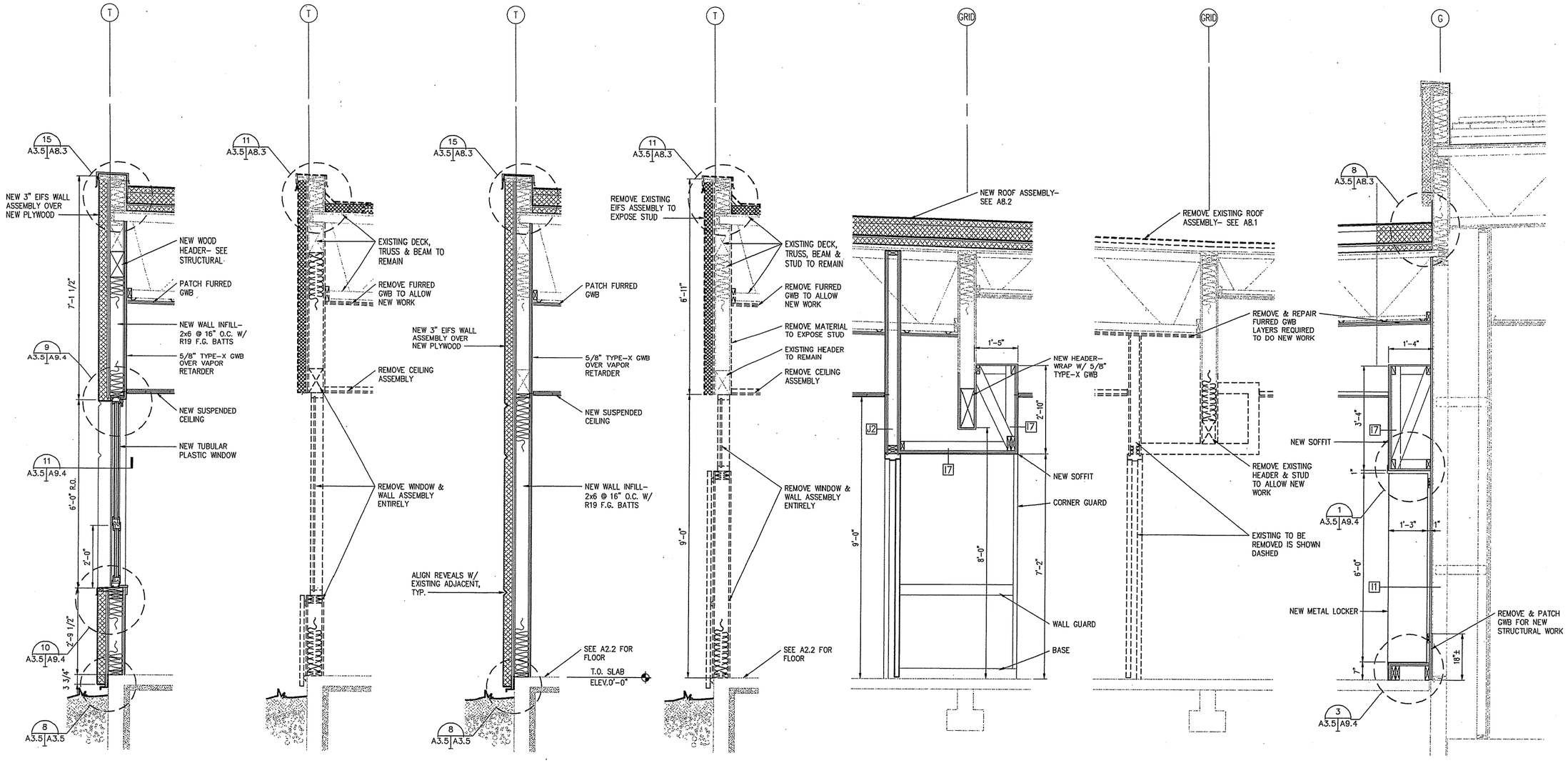

7 WALL SECTION - NEW
A3.4 A3.5 A2.2 A3.2 SCALE: 3/4"=1'-0"

6 WALL SECTION - DEMO
A3.4 A3.5 D2.2 A3.2 SCALE: 3/4"=1'-0"

5 WALL SECTION - NEW
A3.4 A3.5 A2.2 A3.2 SCALE: 3/4"=1'-0"

4 WALL SECTION - DEMO
A3.4 A3.5 D2.2 A3.2 SCALE: 3/4"=1'-0"

3 WALL SECTION - NEW
A3.4 A3.5 A2.2 SCALE: 3/4"=1'-0"

2 WALL SECTION - DEMO
A3.4 A3.5 D2.2 SCALE: 3/4"=1'-0"

1 WALL SECTION
A3.4 A3.5 A2.2 SCALE: 3/4"=1'-0"

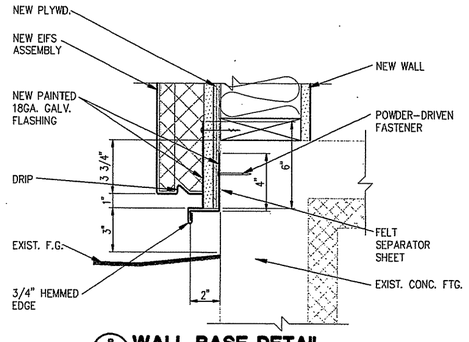

8 WALL BASE DETAIL
A3.5 A3.5 A3.2 SCALE: 3"=1'-0"

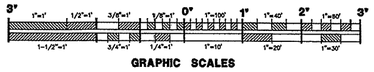

GRAPHIC SCALES

REFERENCE NO. A3.5

REV.	DATE	C.O.	ACTION	DESCRIPTION	BY	APP'D.

CONTRACT NO.

CONTRACTOR

CITY STATE

RECOMMENDED: PRIME CONTRACTOR

APPROVED: RESIDENT ENGINEER

DATE:

USKH A quarter century of design for Alaska

ALASKA DISTRICT CORPS OF ENGINEERS ANCHORAGE, ALASKA

DESIGNED: HAP
DRAWN: MAF
TRACED:
CHECKED: JAH
SUBMITTED:
CH. SECT.

BEN EIELSON JR./SR. HIGH SCHOOL – PHASE 3
EIELSON AIR FORCE BASE, ALASKA
ARCHITECTURAL

WALL SECTIONS

RECOMMENDED: CHIEF, MILITARY TECHNICAL ENGINEERING BRANCH

APPROVED: CHIEF ENGINEERING DIVISION

DATE:

SCALE: AS SHOWN

SPEC. NO.

DRAWING NUMBER 29-02-38

SHEET OF

CORPS OF ENGINEERS

U. S. ARMY

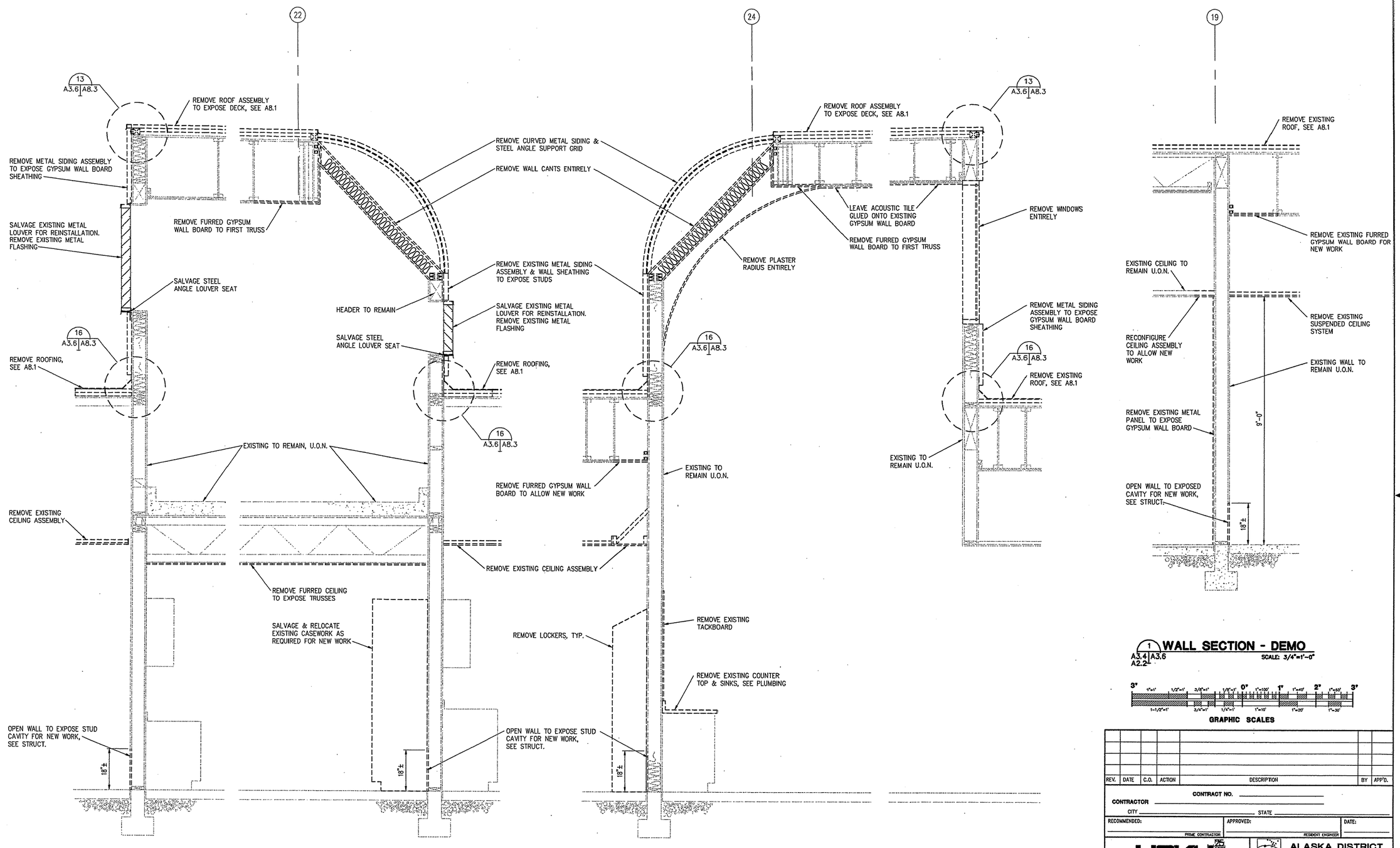

5 WALL SECTION - DEMO
A3.4 A3.6 A2.2 SCALE: 3/4"=1'-0"

4 WALL SECTION - DEMO
A3.4 A3.6 A2.2 SCALE: 3/4"=1'-0"

3 WALL SECTION - DEMO
A3.4 A3.6 A2.2 SCALE: 3/4"=1'-0"

2 WALL SECTION - DEMO
A3.4 A3.6 A2.2 SCALE: 3/4"=1'-0"

1 WALL SECTION - DEMO
A3.4 A3.6 A2.2 SCALE: 3/4"=1'-0"

GRAPHIC SCALES

REV.	DATE	C.O.	ACTION	DESCRIPTION	BY	APP'D.

CONTRACT NO.

CONTRACTOR

CITY STATE

RECOMMENDED: PRIME CONTRACTOR | APPROVED: RESIDENT ENGINEER | DATE:

USKH A quarter century of design for Alaskans

ALASKA DISTRICT
CORPS OF ENGINEERS
ANCHORAGE, ALASKA

DESIGNED: HAP
DRAWN: MAF
TRACED:
CHECKED: JAH
SUBMITTED:
DI. SECT.

BEN EIELSON JR./SR. HIGH SCHOOL – PHASE 3
EIELSON AIR FORCE BASE, ALASKA
ARCHITECTURAL

WALL SECTIONS

RECOMMENDED: CHIEF, MILITARY TECHNICAL ENGINEERING BRANCH | APPROVED: CHIEF ENGINEERING DIVISION | DATE:

SCALE: AS SHOWN | SPEC. NO.

DRAWING NUMBER 29-02-38

SHEET OF

REFERENCE NO. A3.6

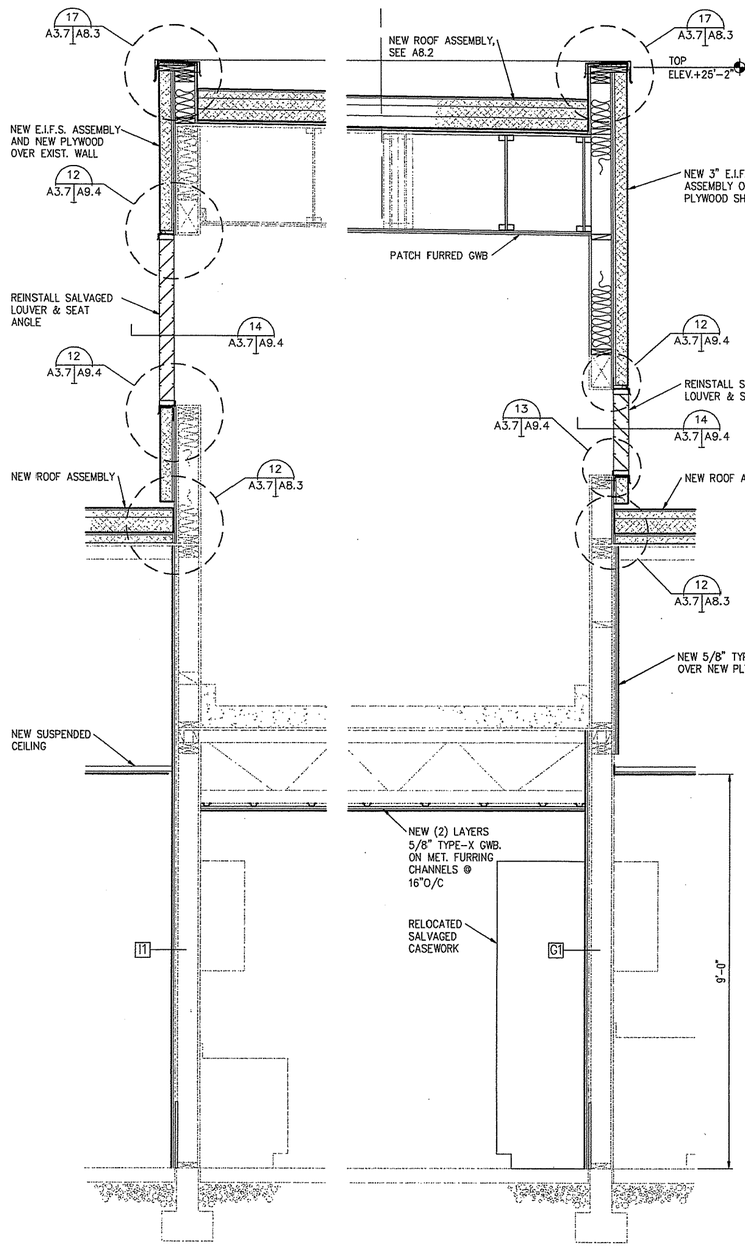

5 WALL SECTION - NEW
A3.4 A2.2 A3.7 SCALE: 3/4"=1'-0"

4 WALL SECTION - NEW
A3.4 A2.2 A3.7 SCALE: 3/4"=1'-0"

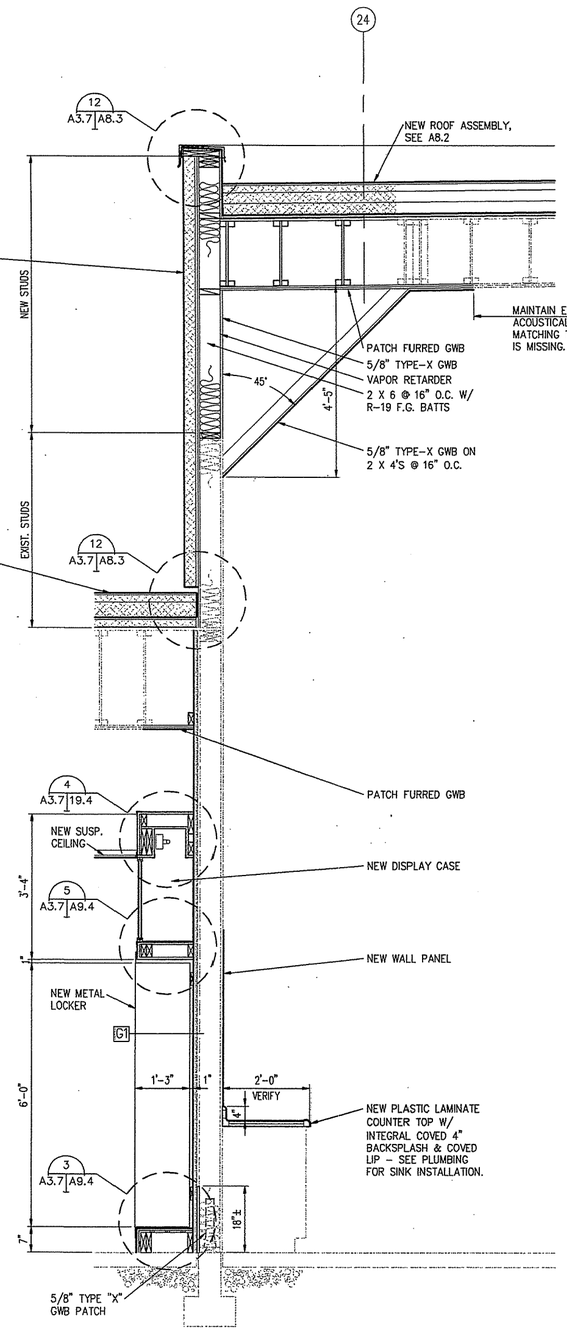

3 WALL SECTION - NEW
A3.4 A2.2 A3.7 SCALE: 3/4"=1'-0"

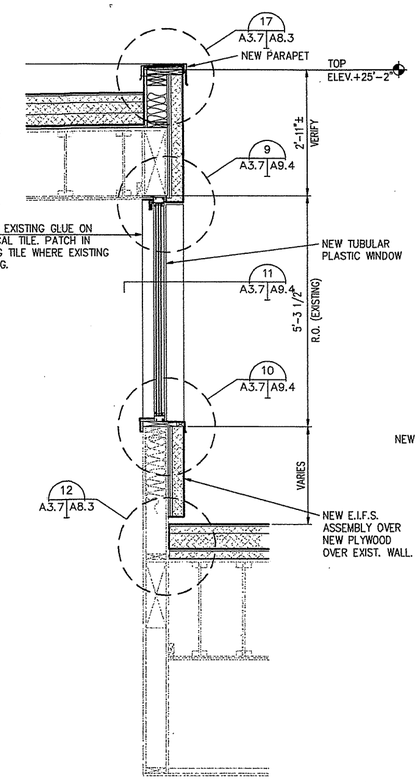

2 WALL SECTION - NEW
A3.4 A2.2 A3.7 SCALE: 3/4"=1'-0"

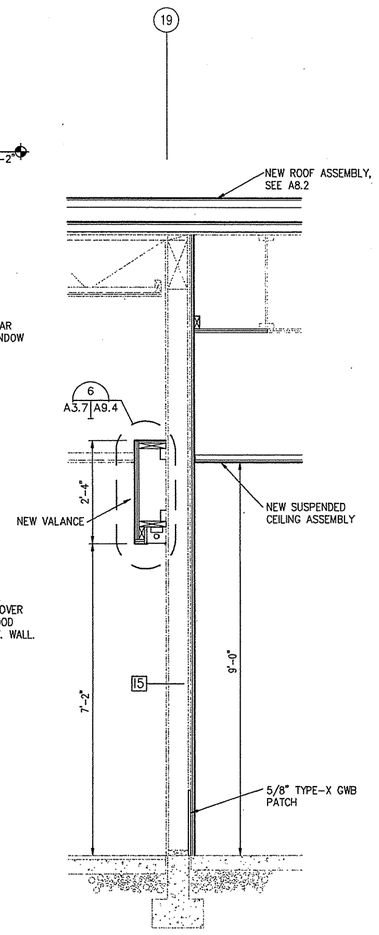

1 WALL SECTION - NEW
A3.4 A2.2 A3.7 SCALE: 3/4"=1'-0"

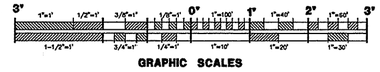

GRAPHIC SCALES

REV.	DATE	C.O.	ACTION	DESCRIPTION	BY	APP'D.

CONTRACT NO.
CONTRACTOR
CITY STATE
RECOMMENDED: PRIME CONTRACTOR
APPROVED: RESIDENT ENGINEER
DATE:

USKH A quarter century of design for Alaskans

ALASKA DISTRICT
CORPS OF ENGINEERS
ANCHORAGE, ALASKA

DESIGNED: HAP
DRAWN: MAF
TRACED:
CHECKED: JAH
SUBMITTED:
CH. SECT.

BEN EIELSON JR./SR. HIGH SCHOOL - PHASE 3
EIELSON AIR FORCE BASE, ALASKA
ARCHITECTURAL

WALL SECTIONS

RECOMMENDED: CHIEF, MILITARY TECHNICAL ENGINEERING BRANCH
APPROVED: CHIEF ENGINEERING DIVISION
DATE:
SCALE: AS SHOWN
SPEC. NO.
DRAWING NUMBER 29-02-38
SHEET OF

REFERENCE NO. A3.7

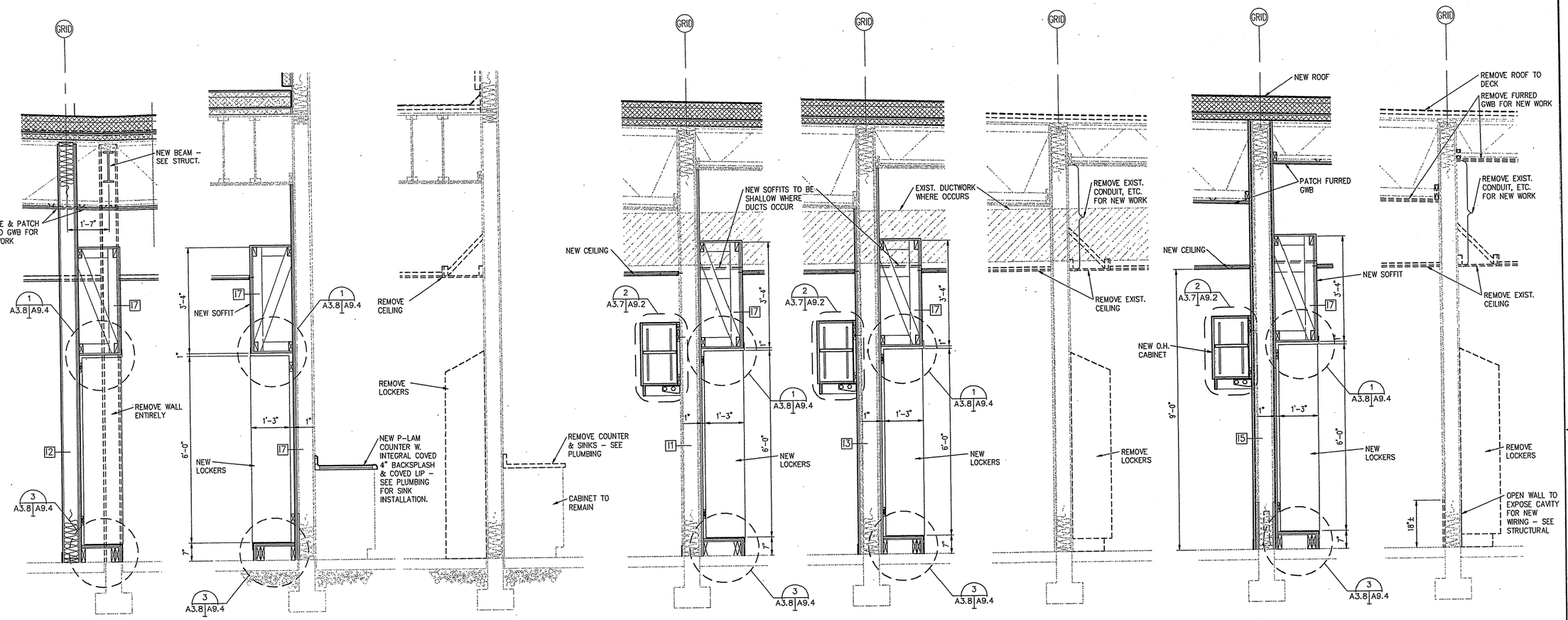

8 WALL SECTION
A3.4 A3.8 A2.2 D2.2 SCALE: 3/4"=1'-0"

7 WALL SECTION-NEW
A3.4 A3.8 A2.2 SCALE: 3/4"=1'-0"

6 WALL SECTION-DEMO
A3.4 A3.8 D2.2 SCALE: 3/4"=1'-0"

5 WALL SECTION-NEW
A3.4 A3.8 A2.2 SCALE: 3/4"=1'-0"

4 WALL SECTION-NEW
A3.4 A3.8 A2.2 SCALE: 3/4"=1'-0"

3 WALL SECTION-DEMO
A3.4 A3.8 D2.2 SCALE: 3/4"=1'-0"

2 WALL SECTION-NEW
A3.4 A3.8 A2.2 SCALE: 3/4"=1'-0"

1 WALL SECTION-DEMO
A3.4 A3.8 D2.2 SCALE: 3/4"=1'-0"

GRAPHIC SCALES

REFERENCE NO. A3.8

REV.	DATE	C.O.	ACTION	DESCRIPTION	BY	APP'D.

CONTRACT NO.

CONTRACTOR

CITY STATE

RECOMMENDED: PRIME CONTRACTOR

APPROVED: RESIDENT ENGINEER

DATE:

USKH 25 YEARS A quarter century of design for Alaskans

ALASKA DISTRICT
CORPS OF ENGINEERS
ANCHORAGE, ALASKA

DESIGNED: HAP
DRAWN: MAF
TRACED:
CHECKED: JAH
SUBMITTED:
CH. SECT.

BEN EIELSON JR./SR. HIGH SCHOOL – PHASE 3
EIELSON AIR FORCE BASE, ALASKA
ARCHITECTURAL

WALL SECTIONS

RECOMMENDED: CHIEF, MILITARY TECHNICAL ENGINEERING BRANCH

APPROVED: CHIEF ENGINEERING DIVISION

DATE:

SCALE: AS SHOWN

SPEC. NO.

DRAWING NUMBER 29-02-38

SHEET OF

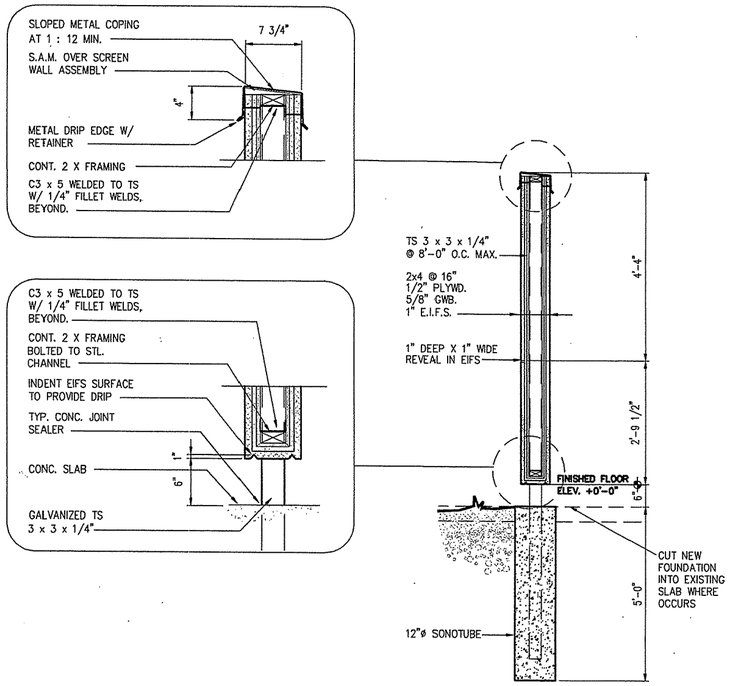

3 A2.1 A3.9 **SCREEN WALL**

SCALE: 3/4"=1'-0"

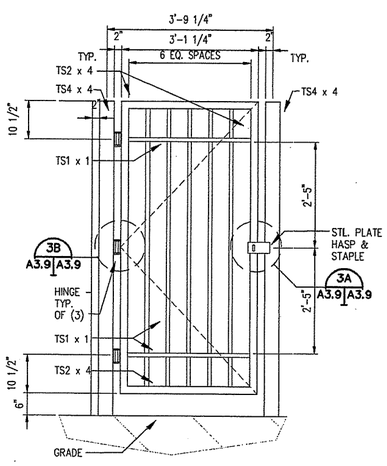

ALL JOINTS TO BE WELDED WITH 1/4" FILLET WELDS AND GROUND SMOOTH

3D A2.1 A3.9 **FENCE GATE ELEVATION**

SCALE: 3/4"=1'-0"

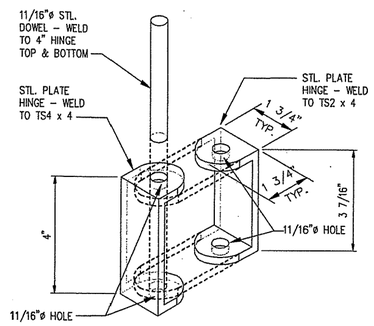

3B A3.9 A3.9 **GATE HINGE ISOMETRIC**

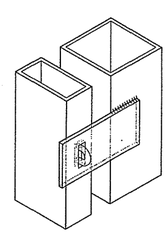

3A A3.9 A3.9 **HASP ISOMETRIC**

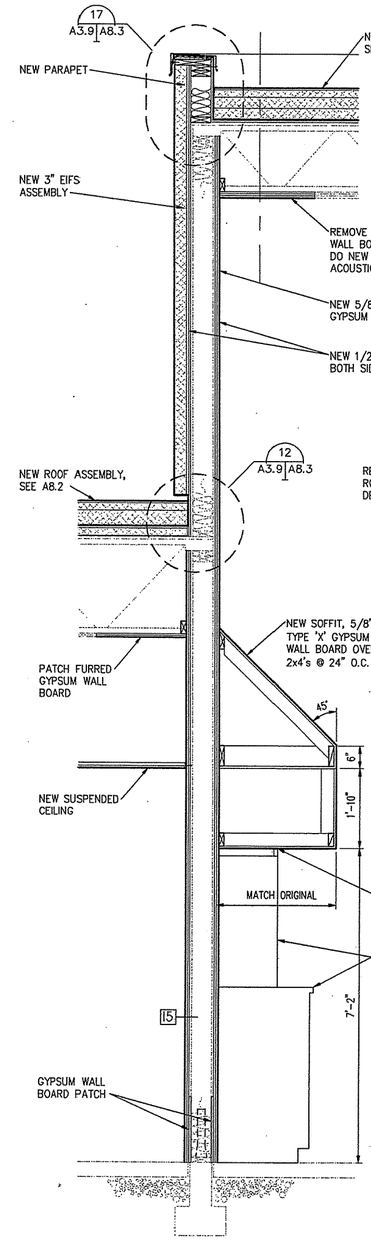

2 A2.2 A3.9 **WALL SECTION-NEW**

SCALE: 3/4"=1'-0"

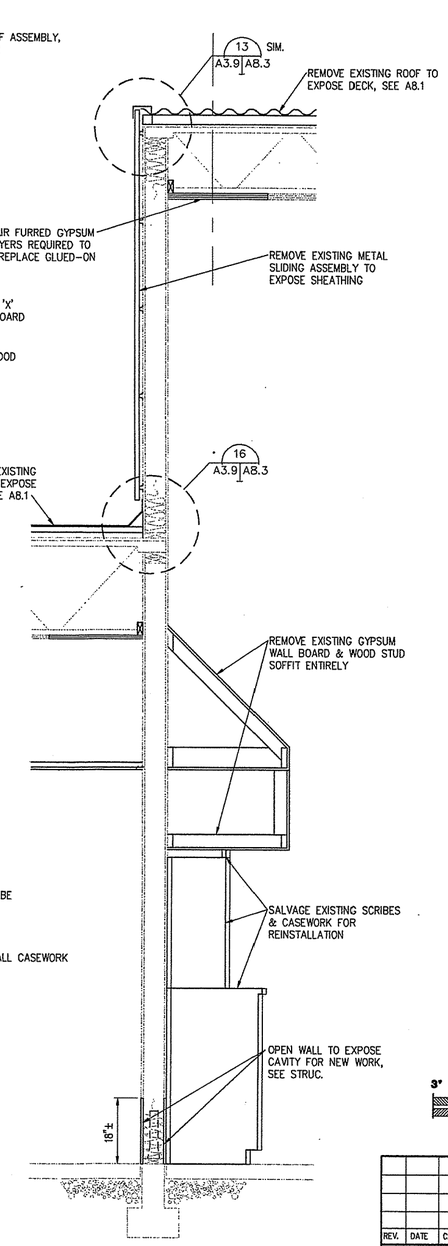

1 D2.2 A3.9 **WALL SECTION-DEMO**

SCALE: 3/4"=1'-0"

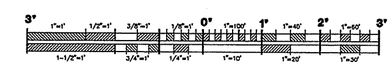

GRAPHIC SCALES

REV.	DATE	C.O.	ACTION	DESCRIPTION	BY	APP'D.

CONTRACT NO. _____

CONTRACTOR _____

CITY _____ STATE _____

RECOMMENDED: PRIME CONTRACTOR | APPROVED: RESIDENT ENGINEER | DATE:

USKH — A quarter century of design for Alaskans

ALASKA DISTRICT
CORPS OF ENGINEERS
ANCHORAGE, ALASKA

DESIGNED: HAP
DRAWN: MAF
TRACED:
CHECKED: JAH
SUBMITTED:
QC: SECT.

BEN EIELSON JR./SR. HIGH SCHOOL – PHASE 3
EIELSON AIR FORCE BASE, ALASKA
ARCHITECTURAL

WALL SECTIONS & DETAILS

RECOMMENDED: CHIEF, MILITARY TECHNICAL ENGINEERING BRANCH | APPROVED: CHIEF ENGINEERING DIVISION | DATE:

SCALE: AS SHOWN | SPEC. NO.

DRAWING NUMBER 29-02-38

SHEET OF

REFERENCE NO. A3.9

CORPS OF ENGINEERS

U. S. ARMY

NOTES: (ROOFS 13, 17, 21, 22, 23)

1. ALL NEW ROOFS TO BE 1/4:12 SLOPE MINIMUM, UNLESS OTHERWISE NOTED. PROVIDE UNDER MEMBRANE CRICKETS AS INDICATED AND AS NEEDED TO DRAIN ROOF, PONDING WATER IS NOT ALLOWED.
2. FIELD VERIFY ALL EXISTING ROOF SLOPES. PROVIDE UNDER MEMBRANE CRICKETS AS INDICATED, AS NEEDED AND AT ALL CURB MOUNTED FEATURES TO DRAIN ROOF. PONDING WATER IS NOT ALLOWED.
3. FIELD VERIFY ELEVATIONS, SQUARE FOOTAGE'S AND DIMENSIONS.
4. REPLACE ALL EXISTING ROOF DRAINS (RD). COORDINATE WITH STRUCTURAL. PROVIDE NEW OVERFLOW ROOF DRAINS (ORD) AND OVERFLOW SCUPPERS (OFS) AS INDICATED. ORD AND OFS TO BE PLACED 2" HIGHER THAN PRIMARY DRAINS AND SCUPPERS. PROVIDE NEW EMERGENCY OVERFLOW SCUPPERS (EOFS) AS INDICATED. COORDINATE LOCATION OF ALL SCUPPERS WITH ARCHITECTURAL ELEVATIONS.
5. COORDINATE QUANTITY, TYPE AND SIZE OF ROOF PENETRATIONS WITH ALL OTHER DISCIPLINES.
6. ▽20" INDICATES ROOF PENETRATION (20"x20" DUCT). COORDINATE WITH MECHANICAL.
7. EPS CRICKETS: PRIOR TO FABRICATION VERIFY THAT HIGH POINTS ARE COORDINATED WITH PARAPET HEIGHTS. CRICKET VALLEYS DESIGNED AT 45° FOR MAXIMUM SLOPE, U.O.N.
8. AT VTR AND OTHER ROUND LG PENETRATIONS, CUT ROUND HOLE IN LG.
9. SEE MECHANICAL FOR QUANTITY AND SIZE OF NEW VTR'S.
10. PERIMETER PAVERS AND INCIDENTAL STRAPPING NOT SHOWN AT IRMA ROOFS FOR CLARITY.
12. PROVIDE 64"x64" PAVER AREA AT PENTHOUSE DOOR ON ROOF 21.
13. SEE STRUCTURAL FOR DRAG STRUTS ON ROOF 21 DECK.
14. ROOF 17 IS OPTION H. SEE A2.1 FOR OPTION INFORMATION.
15. EXISTING ROOF-MOUNTED CONDENSORS AT APPROXIMATE LOCATION GRID K BETWEEN GRIDS 15 AND 16 TO BE REMOVED. SEE DETAIL 9/A8.4.

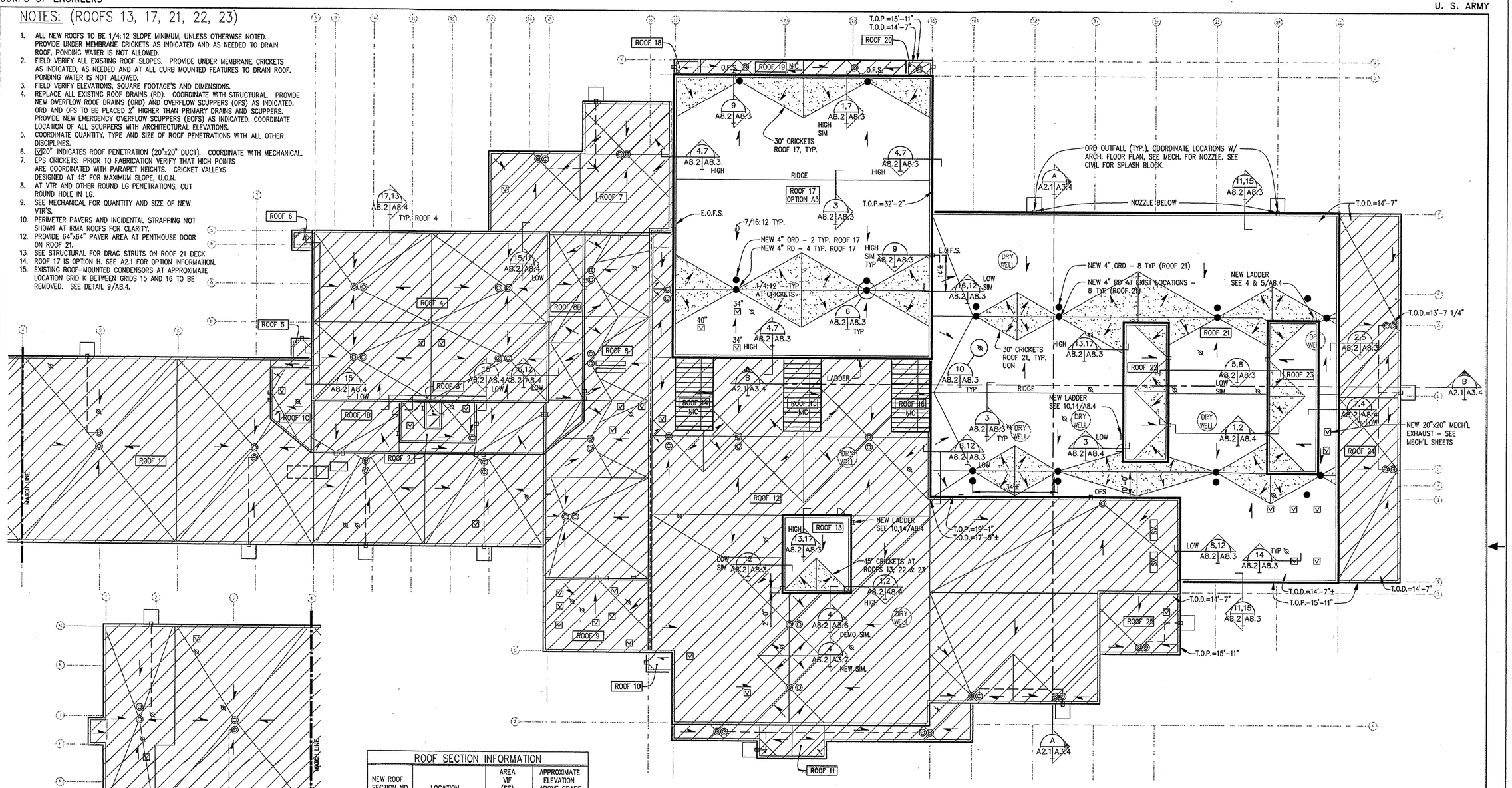

ROOF SECTION INFORMATION			
NEW ROOF SECTION NO.	LOCATION	AREA VIF (SF)	APPROXIMATE ELEVATION ABOVE GRADE
1	NIC	21,324	12'
2	NIC	447	23'
3	NIC	78	30'
4	NIC	6,898	30'
5	NIC	70	12'
6	NIC	70	12'
7	NIC	3,244	15'
8	NIC	6,088	15'
9	NIC	1,301	18'
10	NIC	41	15'
11	NIC	1,013	15'
12	NIC	22,394	19'
13 *	PENTHOUSE	911	28'
14	NIC	463	28'
15	NIC	463	28'
16	NIC	463	28'
17 *	GYM (AREA 'C')	12,344	33'
18	NIC	72	14'
19	NIC	528	14'
20	NIC	72	14'
21 *	AREA 'E'	19,409	15'
22 *	FAN ROOM	1,056	24'
23 *	CLERESTORY	1,311	24'
24	NIC	3,817	15'
25	NIC	829	15'

* PHASE 3 WORK (PLUS SOME WORK AT ROOF 4 AREA)

1 A8.2 NEW ROOF PLAN
SCALE: 1/16" = 1'-0"

UNDER MEMBRANE CRICKETS - APPROX. LOCATION & SIZE

NIC ROOF AREAS U.O.N.

GRAPHIC SCALES

REFERENCE NO. A8.2

REV.	DATE	C.O.	ACTION	DESCRIPTION	BY	APP'D.

CONTRACT NO.

CONTRACTOR

CITY STATE

RECOMMENDED: PRIME CONTRACTOR

APPROVED: RESIDENT ENGINEER

DATE:

USKH — A quarter century of design for Alaskans

ALASKA DISTRICT
CORPS OF ENGINEERS
ANCHORAGE, ALASKA

DESIGNED: HAP
DRAWN: RWP
TRACED:
CHECKED: JAH
SUBMITTED:
CH. SECT.

BEN EIELSON JR./SR. HIGH SCHOOL - PHASE 3
EIELSON AIR FORCE BASE, ALASKA
ARCHITECTURAL

NEW ROOF PLAN

RECOMMENDED: CHIEF, MILITARY TECHNICAL ENGINEERING BRANCH

APPROVED: CHIEF ENGINEERING DIVISION

DATE:

SCALE: 1/16" = 1'-0"

SPEC. NO.

DRAWING NUMBER 29-02-38

SHEET OF

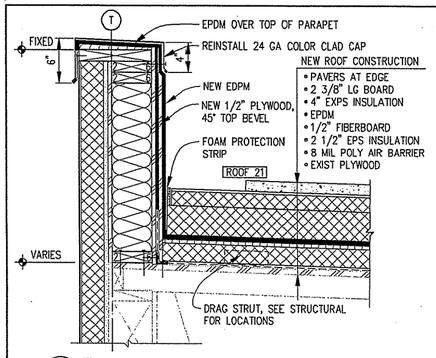

15 PARAPET - NEW
A8.2 A8.3 — ROOF 21 — SCALE: 1 1/2"=1'-0"

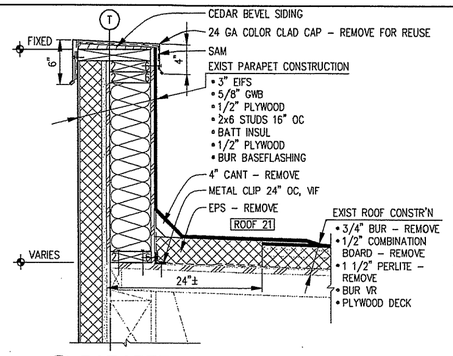

11 PARAPET - EXIST
A8.2 A8.3 — ROOF 21 — SCALE: 1 1/2"=1'-0"

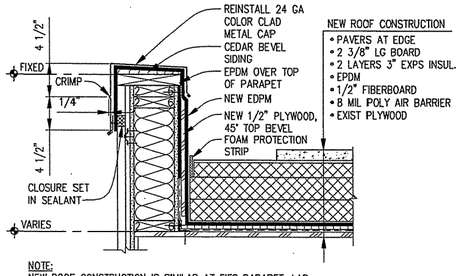

NOTE:
NEW ROOF CONSTRUCTION IS SIMILAR AT EIFS PARAPET. LAP EPDM OVER PARAPET & ONTO EIFS SIMILAR TO METAL SIDING.

7 PARAPET - NEW
A8.2 A8.3 — ROOF 17 — SCALE: 1 1/2"=1'-0"

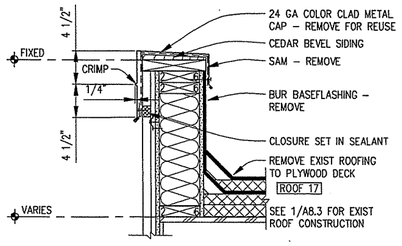

4 PARAPET - EXIST
A8.2 A8.3 — ROOF 17 — SCALE: 1 1/2"=1'-0"

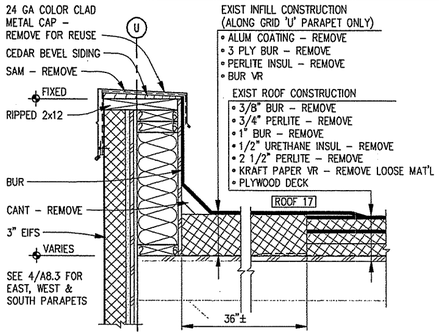

1 PARAPET - EXIST
A8.2 A8.3 — ROOF 17 (GRID 'U') — SCALE: 1 1/2"=1'-0"

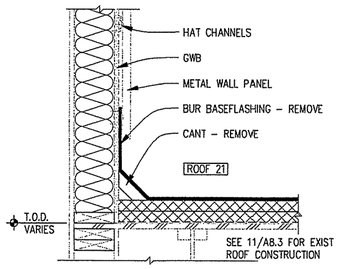

16 SIDEWALL - EXIST
A8.2 A8.3 — ROOF 21 — SCALE: 1 1/2"=1'-0"

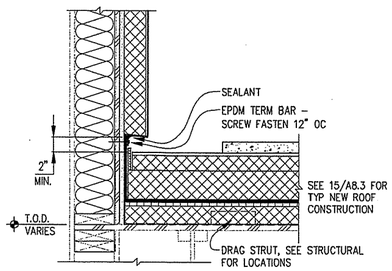

12 SIDEWALL - NEW
A8.2 A8.3 — ROOF 21 — SCALE: 1 1/2"=1'-0"

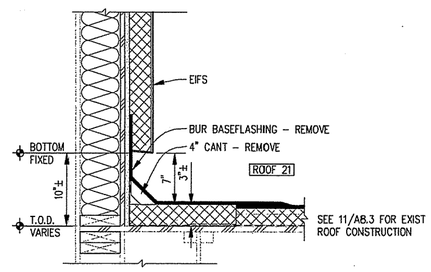

8 SIDEWALL - EXIST
A8.2 A8.3 — ROOF 21 — SCALE: 1 1/2"=1'-0"

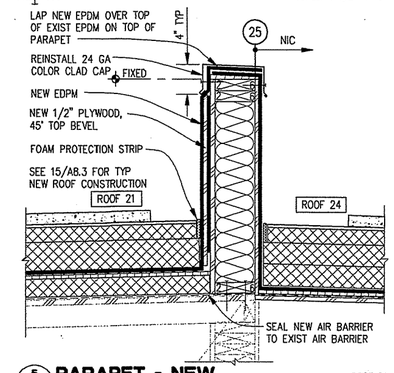

5 PARAPET - NEW
A8.2 A8.3 — ROOF 21 — SCALE: 1 1/2"=1'-0"

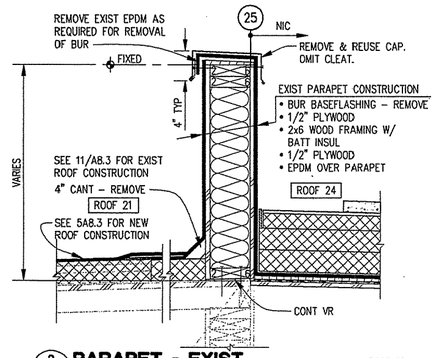

2 PARAPET - EXIST
A8.2 A8.3 — ROOF 21 — SCALE: 1 1/2"=1'-0"

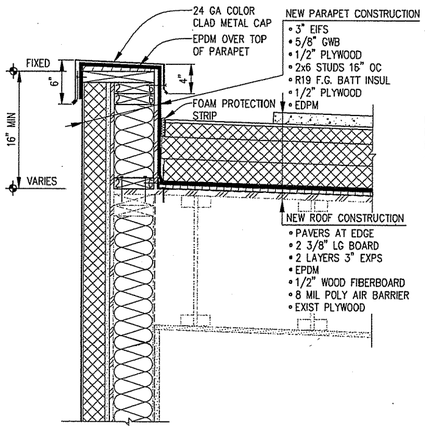

17 PARAPET - NEW
A8.2 A8.3 — ROOFS 13, 22, 23 — SCALE: 1 1/2"=1'-0"

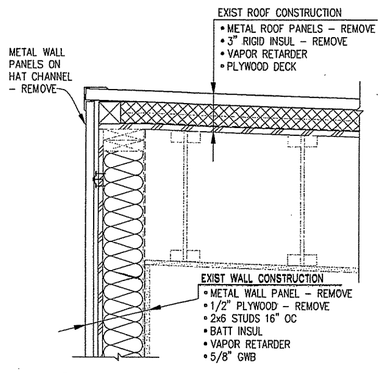

13 EDGE - EXIST
A8.2 A8.3 — ROOFS 13, 22, 23 — SCALE: 1 1/2"=1'-0"

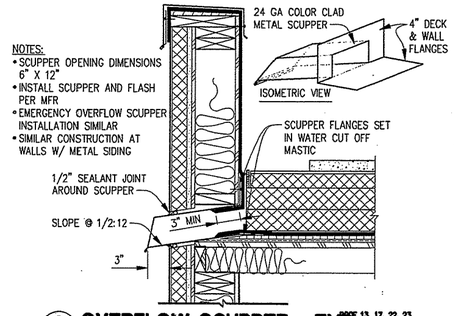

NOTES:
- SCUPPER OPENING DIMENSIONS 6" X 12"
- INSTALL SCUPPER AND FLASH PER MFR
- EMERGENCY OVERFLOW SCUPPER INSTALLATION SIMILAR
- SIMILAR CONSTRUCTION AT WALLS W/ METAL SIDING

9 OVERFLOW SCUPPER - TYP
A8.2 A8.3 — ROOF 13, 17, 22, 23 ROOF 21 SYM. — SCALE: 1 1/2"=1'-0"

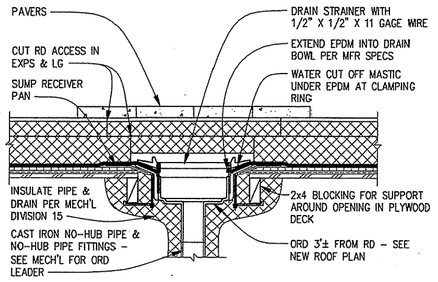

6 RD / ORD - TYP
A8.2 A8.3 — ROOF 17 — SCALE: 1 1/2"=1'-0"

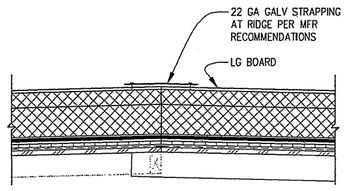

3 RIDGE SECUREMENT - TYP
A8.2 A8.3 — ROOF 13, 17, 22, 23 ROOF 21 SYM. — SCALE: N.T.S.

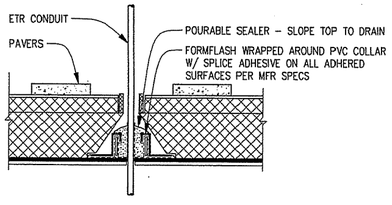

18 ETR - NEW
GEN. A8.3 — ROOF 13, 17, 22, 23 ROOF 21 SYM. — SCALE: 1 1/2"=1'-0"

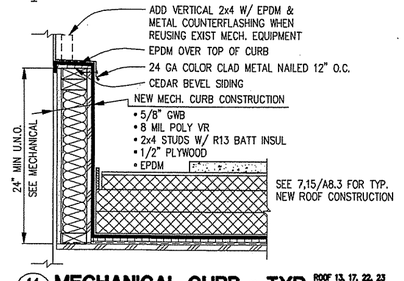

14 MECHANICAL CURB - TYP
A8.2 A8.3 — ROOF 13, 17, 22, 23 ROOF 21 SYM. — SCALE: 1 1/2"=1'-0"

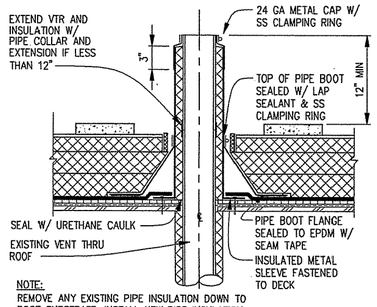

NOTE:
REMOVE ANY EXISTING PIPE INSULATION DOWN TO ROOF SUBSTRATE. INSTALL NEW PIPE INSULATION OVER EXISTING VTR.

10 VTR - TYP
A8.2 A8.3 — ROOF 13, 17, 22, 23 ROOF 21 SYM. — SCALE: 1 1/2"=1'-0"

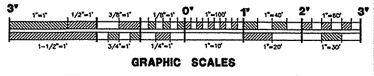

GRAPHIC SCALES

REFERENCE NO. A8.3

REV.	DATE	C.O.	ACTION	DESCRIPTION	BY	APP'D.

CONTRACT NO.
CONTRACTOR
CITY STATE

RECOMMENDED: PRIME CONTRACTOR
APPROVED: RESIDENT ENGINEER
DATE:

USKH — A quarter century of design for Alaskans

ALASKA DISTRICT
CORPS OF ENGINEERS
ANCHORAGE, ALASKA

DESIGNED: HAP
DRAWN: RWP
TRACED:
CHECKED: JAH
SUBMITTED:
DI. SEC.

BEN EIELSON JR./SR. HIGH SCHOOL – PHASE 3
EIELSON AIR FORCE BASE, ALASKA
ARCHITECTURAL

ROOF DETAILS

RECOMMENDED: CHIEF, MILITARY TECHNICAL ENGINEERING BRANCH
APPROVED: CHIEF ENGINEERING DIVISION
DATE:

SCALE: AS SHOWN
SPEC. NO.
DRAWING NUMBER 29-02-38
SHEET OF

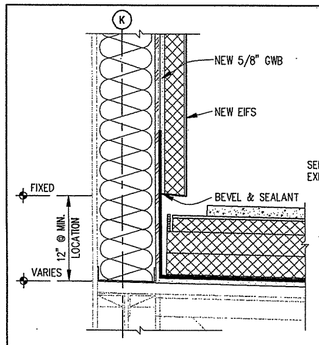

15 SIDEWALL - NEW
A8.2|A8.4
ROOFS 1, 1B, 1C, 2, 5, 6, 7
SCALE: 1 1/2"=1'-0"

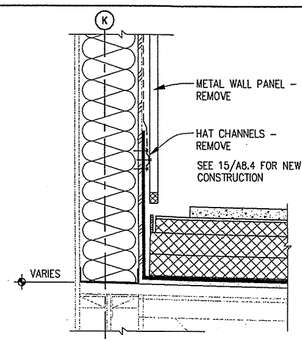

11 SIDEWALL - EXISTING
A8.2|A8.4
ROOFS 1, 1B, 1C, 2, 5, 6, 7
SCALE: 1 1/2"=1'-0"

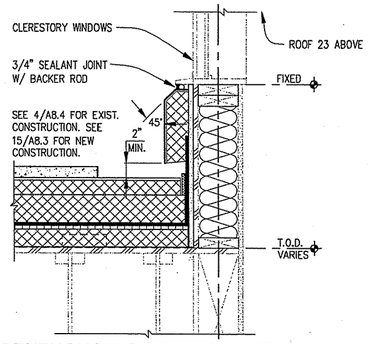

7 PENTHOUSE SIDEWALL - NEW
A8.2|A8.4
ROOF 21
SCALE: 1 1/2"=1'-0"

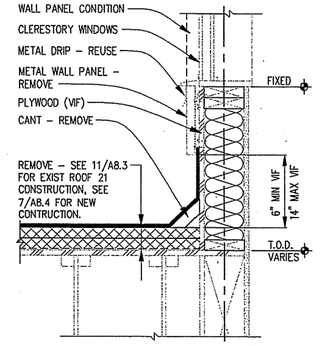

4 PENTHOUSE SIDEWALL - EXIST
A8.2|A8.4
ROOF 21
SCALE: 1 1/2"=1'-0"

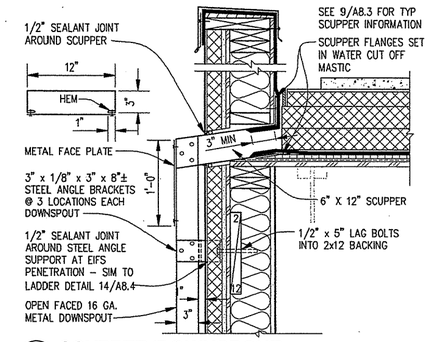

1 SCUPPER/DOWNSPOUT
A8.2|A8.4
ROOFS 13, 22, 23
SCALE: 1 1/2"=1'-0"

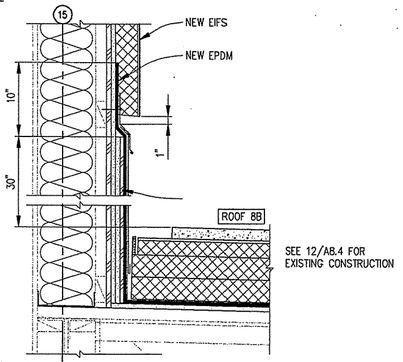

16 SIDEWALL - NEW
A8.2|A8.4
ROOF 8B
SCALE: 1 1/2"=1'-0"

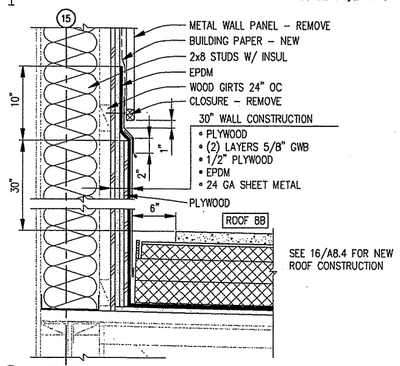

12 SIDEWALL - EXISTING
A8.2|A8.4
ROOF 8B
SCALE: 1 1/2"=1'-0"

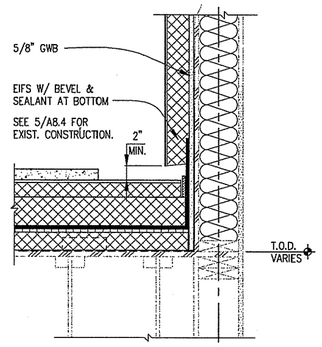

8 PENTHOUSE SIDEWALL - NEW
A8.2|A8.4
BELOW ROOF 13
SCALE: 1 1/2"=1'-0"

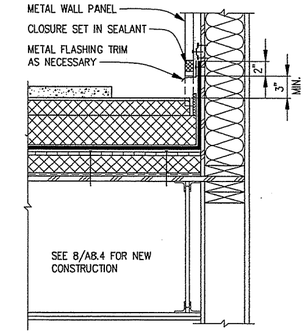

5 PENTHOUSE SIDEWALL - EXIST
A8.2|A8.4
BELOW ROOF 13
SCALE: 1 1/2"=1'-0"

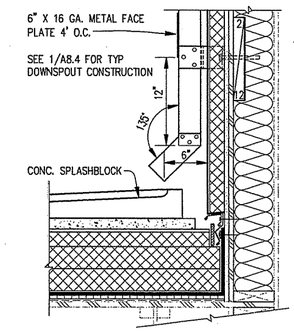

2 DOWNSPOUT/SPLASHBLOCK
A8.2|A8.4
ROOF 21
SCALE: 1 1/2"=1'-0"

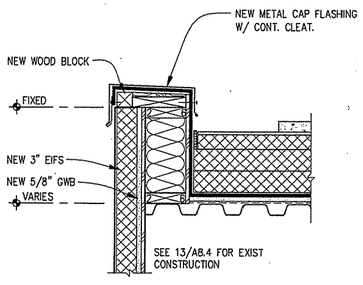

17 PARAPET - NEW
A8.2|A8.4
ROOF 4
SCALE: 1 1/2"=1'-0"

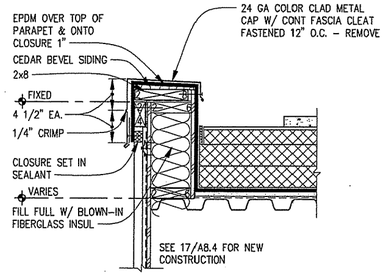

13 PARAPET - EXISTING
A8.2|A8.4
ROOF 4
SCALE: 1 1/2"=1'-0"

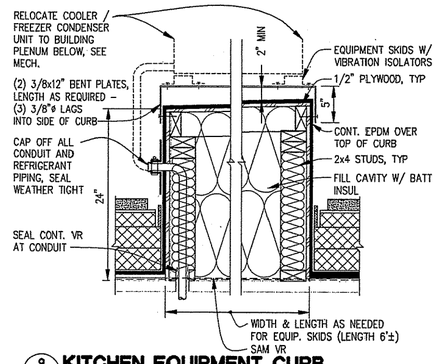

9 KITCHEN EQUIPMENT CURB
A8.4|A8.2
SCALE: 1 1/2"=1'-0"

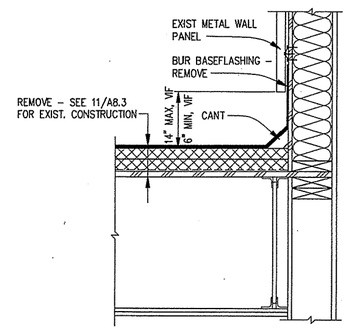

6 SIDEWALL - EXIST
A8.2|A8.4
ROOF 21
SCALE: 1 1/2"=1'-0"

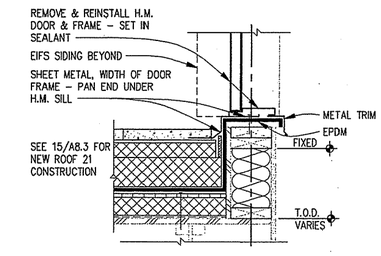

3 DOOR SILL - NEW
A8.2|A8.4
ROOF 21
SCALE: 1 1/2"=1'-0"

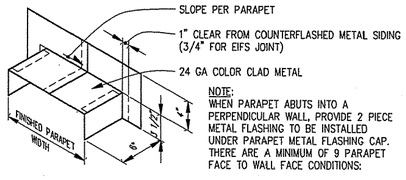

NOTE:
WHEN PARAPET ABUTS INTO A PERPENDICULAR WALL, PROVIDE 2 PIECE METAL FLASHING TO BE INSTALLED UNDER PARAPET METAL FLASHING CAP. THERE ARE A MINIMUM OF 9 PARAPET FACE TO WALL FACE CONDITIONS:

EIFS TO EIFS REQUIRING A SEALANT JOINT. AT TOP OF PARAPET ENDS, PROVIDE METAL FLASHING PER THIS DETAIL. WRAP EPDM OVER PARAPET TOP, ADD PARAPET CAP METAL.

18 TRANSITION DETAIL - NEW
A8.2|A8.4
GENERAL
SCALE: 1 1/2"=1'-0"

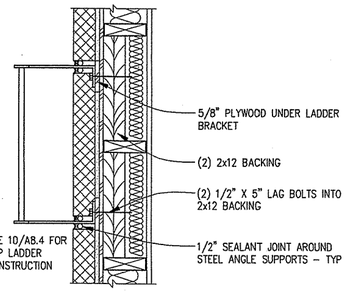

14 LADDER ATTACHMENT
A8.2|A8.4
@ EIFS WALL
SCALE: 1 1/2"=1'-0"

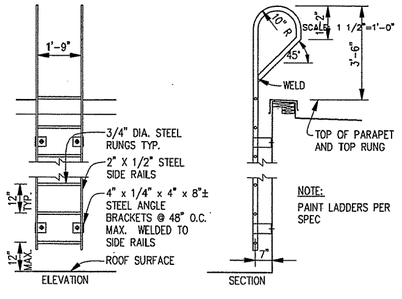

NOTE:
PAINT LADDERS PER SPEC

10 LADDER - NEW
A8.2|A8.4
TO ROOFS 13, 22, 23
SCALE: N.T.S.

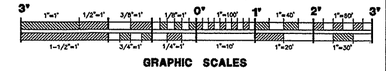

GRAPHIC SCALES

REFERENCE NO. A8.4

REV.	DATE	C.O.	ACTION	DESCRIPTION	BY	APP'D.

CONTRACT NO. _____

CONTRACTOR _____

CITY _____ STATE _____

RECOMMENDED: PRIME CONTRACTOR | APPROVED: RESIDENT ENGINEER | DATE:

USKH — A quarter century of design for Alaska

ALASKA DISTRICT
CORPS OF ENGINEERS
ANCHORAGE, ALASKA

DESIGNED: HAP
DRAWN: RWP
TRACED:
CHECKED: JAH
SUBMITTED:
CH. SECT.

BEN EIELSON JR./SR. HIGH SCHOOL - PHASE 3
EIELSON AIR FORCE BASE, ALASKA
ARCHITECTURAL

ROOF DETAILS

RECOMMENDED: CHIEF, MILITARY TECHNICAL ENGINEERING BRANCH | APPROVED: CHIEF ENGINEERING DIVISION | DATE:

SCALE: AS SHOWN | SPEC. NO.

DRAWING NUMBER 29-02-38

SHEET OF

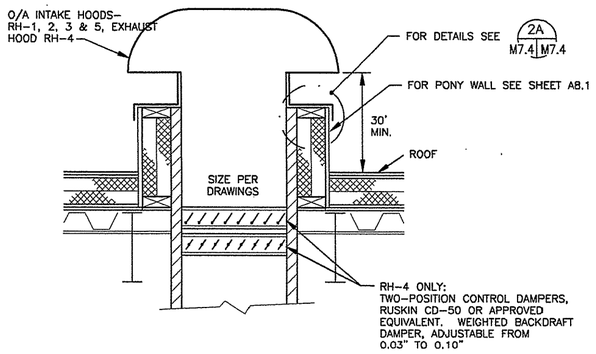

1 M7.2 M7.2 **ROOF HOOD INSTALLATION DETAIL**
SCALE: NONE

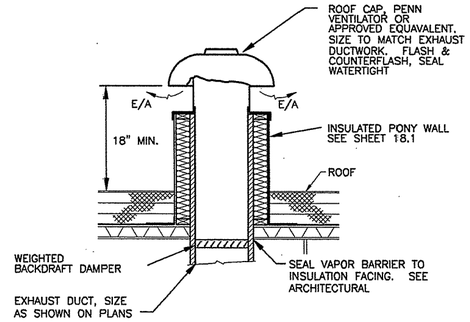

2 M7.2 M7.2 **TYPICAL EXHAUST FAN ROOF PENETRATION**
SCALE: NONE

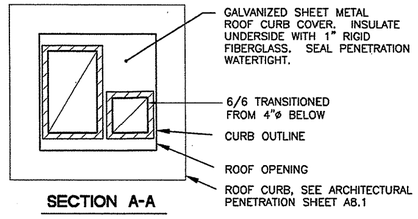

SECTION A-A

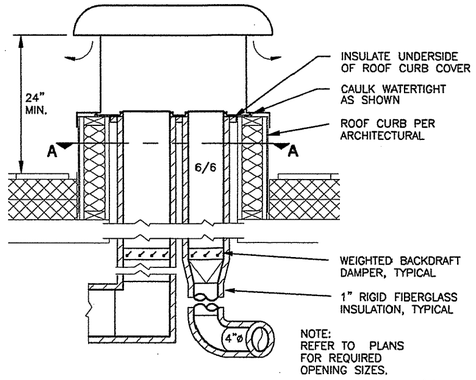

3 M7.2 M7.2 **ROOF PENETRATION DETAIL**
MULTIPLE EXHAUSTS SHOWN
SCALE: NONE

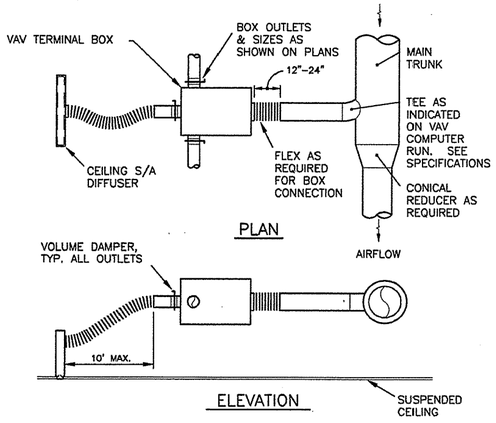

5 M7.2 M7.2 **VAVBOX/DIFFUSER DETAIL**
SCALE: NONE

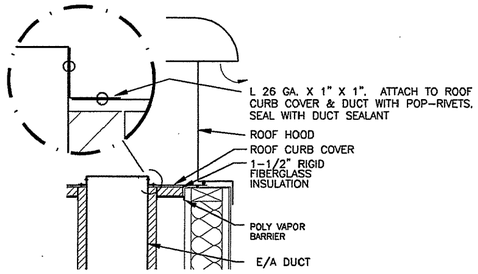

2A M7.4 M7.4 **ROOF CURB COVER INSULATION DETAIL**
SCALE: NONE

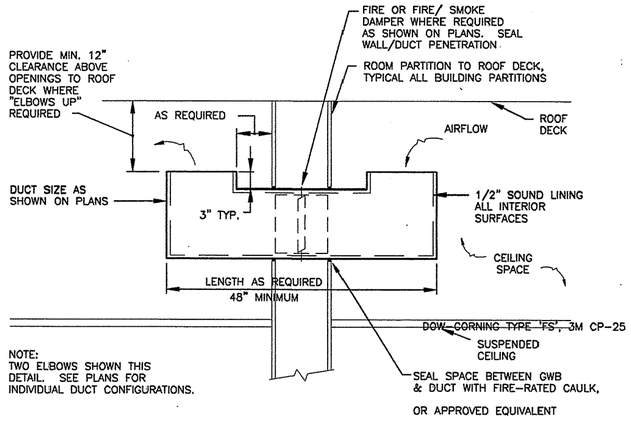

6 M7.2 M7.2 **TRANSFER DUCT DETAIL**
SCALE: NONE

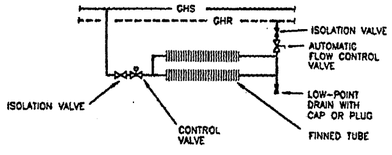

7 M7.2 M7.2 **BASEBOARD PIPING SCHEMATIC**
SCALE: NONE

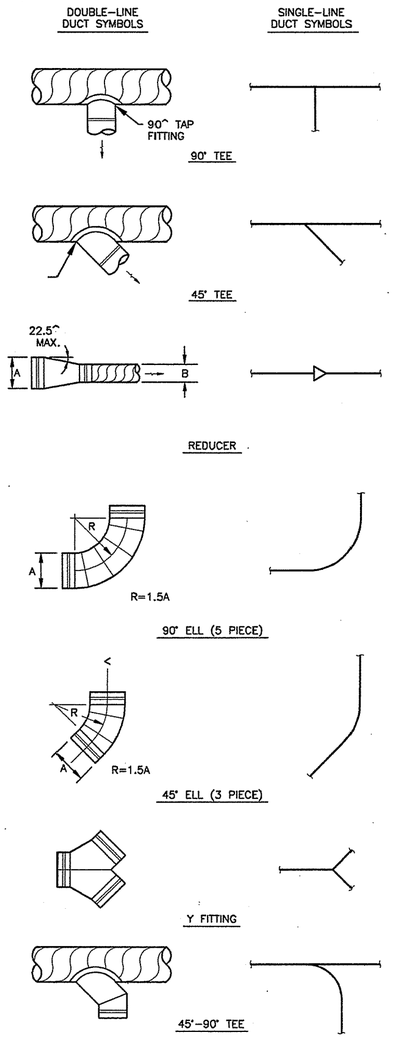

4 M7.2 M7.2 **ROUND DUCT CONSTRUCTION DETAILS**
SCALE: NONE

REV.	DATE	C.O.	ACTION	DESCRIPTION	BY	APP'D.

CONTRACT NO. _____
CONTRACTOR _____
CITY _____ STATE _____
RECOMMENDED: (PRIME CONTRACTOR) APPROVED: (RESIDENT ENGINEER) DATE:

USKH — A quarter century of design for Alaskans
ALASKA DISTRICT
CORPS OF ENGINEERS
ANCHORAGE, ALASKA

DESIGNED: SVB
DRAWN: LDS/EFH
TRACED:
CHECKED: SVB
SUBMITTED:
CK. SEC.

BEN EIELSON JR./SR. HIGH SCHOOL - PHASE 3
EIELSON AIR FORCE BASE, ALASKA
MECHANICAL
TYPICAL DETAILS

RECOMMENDED: (CHIEF, MILITARY TECHNICAL ENGINEERING BRANCH) APPROVED: (CHIEF ENGINEERING DIVISION) DATE:
SCALE: AS SHOWN SPEC. NO.
DRAWING NUMBER 29-02-38
SHEET OF

REFERENCE NO. M7.2

507202M72 (1=1)

CORPS OF ENGINEERS

U. S. ARMY

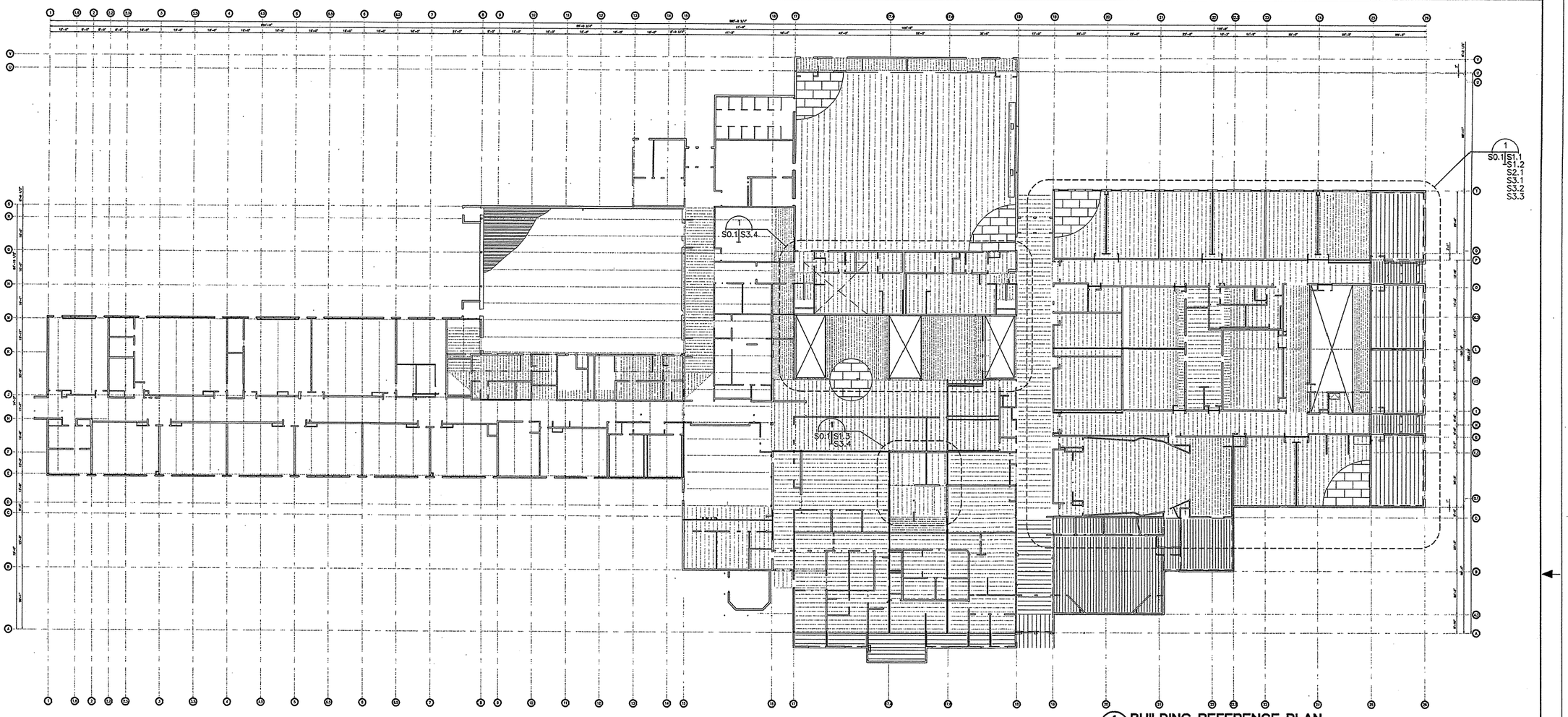

1 BUILDING REFERENCE PLAN
S0.1 S0.1
SCALE: 1"=20'-0"

GENERAL STRUCTURAL NOTES

CODE:

THIS STRUCTURE IS DESIGNED IN ACCORDANCE WITH THE 1994 UNIFORM BUILDING CODE (UBC).

GENERAL:

INFORMATION SHOWN ON THE DRAWINGS RELATING TO THE EXISTING STRUCTURE HAS BEEN ASSUMED FROM RECORD DRAWINGS, AND MAY NOT BE ACCURATE. CONTRACTOR SHALL VERIFY ALL EXISTING CONDITIONS PRIOR TO BEGINNING CONSTRUCTION. NOTIFY THE OWNER IN WRITING OF ANY DISCREPANCIES BETWEEN THE DRAWINGS AND EXISTING CONSTRUCTION PRIOR TO PROCEEDING WITH WORK.

THE CONTRACT STRUCTURAL DRAWINGS AND SPECIFICATIONS REPRESENT THE FINISHED STRUCTURE. THEY DO NOT INDICATE THE METHOD OF CONSTRUCTION. THE CONTRACTOR SHALL PROVIDE ALL MEASURES NECESSARY TO PROTECT THE STRUCTURE DURING CONSTRUCTION. SUCH MEASURES SHALL INCLUDE, BUT NOT BE LIMITED TO: BRACING, SHORING OF LOADS DUE TO CONSTRUCTION EQUIPMENT, ETC. OBSERVATION VISITS TO THE SITE BY THE STRUCTURAL ENGINEER SHALL NOT INCLUDE INSPECTION OF THE ABOVE ITEMS.

CONSTRUCTION MATERIAL SHALL BE SPREAD OUT IF PLACED ON FRAMED FLOORS OR ROOF. LOAD SHALL NOT EXCEED THE DESIGN LIVE LOAD PER SQUARE FOOT.

WHERE REFERENCE IS MADE TO VARIOUS TEST STANDARDS FOR MATERIALS, SUCH STANDARDS SHALL BE THE LATEST EDITION AND/OR ADDENDUM.

ESTABLISH AND VERIFY ALL OPENINGS AND INSERTS FOR ARCHITECTURAL, MECHANICAL, ELECTRICAL, AND PLUMBING WITH APPROPRIATE TRADES, DRAWINGS, AND SUBCONTRACTORS PRIOR TO CONSTRUCTION. DO NOT PENETRATE ANY STRUCTURAL ELEMENTS (BEAMS, COLUMNS, WALLS, SLABS, ETC.) WITHOUT PRIOR WRITTEN APPROVAL OF THE STRUCTURAL ENGINEER.

NOTES AND DETAILS ON DRAWINGS SHALL TAKE PRECEDENCE OVER GENERAL STRUCTURAL NOTES AND TYPICAL DETAILS. WHERE NO SPECIFIC DETAILS ARE SHOWN, CONSTRUCTION SHALL CONFORM TO SIMILAR WORK ON THE PROJECT.

WHERE ANY DISCREPANCIES OCCUR BETWEEN PLANS, DETAILS, GENERAL STRUCTURAL NOTES, AND SPECIFICATIONS, THE GREATER REQUIREMENTS SHALL GOVERN.

ANY ENGINEERING DESIGN PROVIDED BY OTHERS AND SUBMITTED FOR REVIEW SHALL BEAR THE SEAL OF A CIVIL OR STRUCTURAL ENGINEER REGISTERED IN THE STATE IN WHICH THE PROJECT IS LOCATED.

DESIGN LOADS:

ROOF: SNOW — 53 PSF + DRIFTING
FLOOR: EXIT FACILITIES — 100 PSF
FLOOR — 125 PSF
WIND LOADS:
DESIGN WIND SPEED — 70 MPH
EXPOSURE CATEGORY — B
IMPORTANCE FACTOR — 1.00
SEISMIC LOADS:
SEISMIC ZONE — 3
Rw OFFICE — 8
IMPORTANCE FACTOR — 1.00

FOUNDATIONS:

BEARING PRESSURES ARE 3,000 PSF FOR TOTAL VERTICAL DESIGN LOADS AND A BEARING PRESSURE OF 4,000 PSF FOR TOTAL VERTICAL LOADS PLUS WIND AND SEISMIC LOADS. REFER TO THE DRAWINGS FOR DETAILS OF EXCAVATION, BACKFILL, AND COMPACTION.

LEAN CONCRETE:

LEAN CONCRETE SHALL BE MIXED USING FINE AGGREGATE CONFORMING TO ASTM C-33. TWO SACKS OF CEMENT PER YARD, 10% AIR CONTAINMENT USING AN ADMIXTURE CONFORMING TO ASTM C-260 AND WATER. MIX WITH SUFFICIENT WATER TO PRODUCE 10" SLUMP.

CONCRETE:

MIXING AND PLACING OF CONCRETE AND SELECTION OF MATERIALS SHALL BE IN ACCORDANCE WITH THE ACI CODE, SECTION 318-83. NORMAL WEIGHT CONCRETE SHALL HAVE A MINIMUM 28 DAY COMPRESSIVE STRENGTH OF 3,000 PSI. THE CONCRETE MIX SHALL CONSIST OF COARSE AGGREGATE CONFORMING TO ASTM C 33 (3/4" MAX SIZE), TYPE "I" CEMENT, A MAXIMUM WATER/CEMENT RATIO OF 0.45 AND AIR ENTRAINMENT OF 5% (EXPOSED). ADMIXTURES MAY BE USED IN STRICT CONFORMANCE WITH THE MANUFACTURER'S RECOMMENDATIONS. ANCHOR BOLTS SHALL BE ASTM A307, 3/4" MIN. UNLESS NOTED OTHERWISE.

REINFORCING STEEL:

REINFORCING STEEL SHALL CONFORM TO ASTM A-615-82, GRADE 60. ALL REINFORCING STEEL SHALL BE DETAILED, FABRICATED, AND PLACED IN ACCORDANCE WITH ACI 318-83 AND ACI 315. HOLD IN PLACE WITH CURED CONCRETE BLOCKS OR CHAIRS. MINIMUM COVER FOR REINFORCING STEEL SHALL BE:

CONCRETE PLACED AGAINST EARTH — 3"
FORMED SURFACE — 1 1/2"
INTERIOR EXPOSED SURFACE — 3/4"

FOR CONTINUOUS REINFORCING, USE A MINIMUM LAP SPLICE FOR:

BAR SIZE	3,000 PSI
#4	20"
#5	20"
#6	22"

STRUCTURAL STEEL:

STRUCTURAL STEEL SHALL BE DETAILED, FABRICATED, AND ERECTED IN ACCORDANCE WITH THE AMERICAN INSTITUTE OF STEEL CONSTRUCTION (AISC) MANUAL, 9TH EDITION. STRUCTURAL STEEL SHALL CONFORM TO ASTM A572, GRADE 50. TUBE STEEL SECTIONS SHALL BE ASTM A500, GRADE B. BOLTS SHALL BE 3/4"ø, ASTM A325, UNLESS NOTED OTHERWISE. ALL WELDS SHALL BE 3/16" MINIMUM, UNLESS NOTED OTHERWISE, AND SHALL BE BY CERTIFIED WELDERS USING ELECTRODES CONFORMING TO ASTM A-233, CLASS E70. APPLY ONE COAT OF PRIMER PAINT CONFORMING WITH THE STEEL STRUCTURE PAINTING COUNCIL (SSPC) TO ALL STEEL MEMBERS EXCEPT THOSE SECTIONS TO BE EMBEDDED IN CONCRETE. PROVIDE SHOP DRAWINGS WITH DETAILS FOR REVIEW.

LIGHT GAGE STEEL FRAMING:

ALL METAL STUDS, JOISTS, AND ACCESSORIES SHALL BE DESIGNED IN ACCORDANCE WITH THE "AMERICAN IRON AND STEEL INSTITUTE SPECIFICATION FOR DESIGN OF COLD-FORMED STEEL STRUCTURAL MEMBERS", 1986 EDITION. MEMBERS SHALL BE ASTM A446, GRADE D (Fy=50 KSI) FOR 14 AND 16 GAGE, AND ASTM A446, GRADE A (Fy=33 KSI) FOR 18 GAGE AND LIGHTER. FASTENERS SHALL BE #10 SELF DRILLING, SELF TAPPING SCREWS, OR AS INDICATED ON THE DRAWINGS. PROVIDE SHOP DRAWINGS WITH DETAILS FOR REVIEW.

PLYWOOD:

PLYWOOD PANELS SHALL BE STAMPED WITH THE 'APA' GRADE TRADEMARK OF THE AMERICAN PLYWOOD ASSOCIATION AND SHALL MEET U.S. PRODUCT STANDARDS P.S. 1-83. ALL PLYWOOD SHALL BE EXPOSURE 1.

ROOF SHEATHING SHALL BE APA 3/4", C-D, PANEL IDENTIFICATION INDEX 48/24. INSTALL WITH FACE GRAIN PERPENDICULAR TO SUPPORTS. STAGGER END PANEL JOINTS. NAIL ALL SUPPORTED PANEL EDGES WITH 10d NAILS AT 4" O.C. AND INTERMEDIATE SUPPORTS WITH 10d NAILS AT 12" O.C., UNLESS NOTED OTHERWISE.

WALL SHEATHING SHALL BE APA 1/2", C-D PANEL IDENTIFICATION INDEX 32/16. STAGGER END PANEL JOINTS. ALL PANEL EDGES SHALL BE BLOCKED WITH 2" NOMINAL OR WIDER WOOD FRAMING. WHERE PANELS ARE APPLIED ON BOTH FACES OF A WALL, PANEL JOINTS SHALL BE OFFSET TO FALL ON DIFFERENT FRAMING MEMBERS. NAIL ALL PANEL EDGES PER SHEAR WALL SCHEDULE.

DIMENSIONAL LUMBER:

ALL DIMENSIONAL LUMBER SHALL CONFORM TO WESTERN WOODS PRODUCTS ASSOCIATION GRADING RULES FOR HEM-FIR. MINIMUM GRADE FOR NOMINAL 2" AND 4" LUMBER SHALL BE NO. 2, Fb=1,000 PSI SINGLE MEMBER USE; BEAMS AND STRINGERS SHALL BE NO. 1, Fb = 1,050 PSI; POSTS AND TIMBERS SHALL BE NO. 1, Fb = 975 PSI. ALL LUMBER SHALL BE DELIVERED TO THE SITE WITH A MOISTURE CONTENT OF 19% OR LESS AND SHALL BE PROTECTED FROM THE WEATHER TO PREVENT ANY MOISTURE GAIN. STORE ALL LUMBER ON DUNNAGE TO PREVENT CONTACT THE THE GROUND. PRESERVATIVE TREATED LUMBER SHALL BE TREATED IN CONFORMANCE WITH THE AMERICAN LUMBER STANDARDS COMMITTEE (ALSC), SPECIFICATION C-2.

GLUE LAMINATED TIMBERS:

GLUED LAMINATED TIMBERS SHALL COMPLY WITH THE AMERICAN INSTITUTE OF TIMBER CONSTRUCTION STANDARD 103-79 "STANDARD SPECIFICATIONS FOR STRUCTURAL GLUED LAMINATED TIMBER". COMBINATIONS SHALL BE 22F-V4. SHIPPING PROTECTION SHALL CONFORM TO AITC STANDARD 11-65. PROVIDE UNITS WITH A CAMBER OF 1/780 OF THE SPAN LENGTH.

DIMENSIONAL LUMBER:

WOOD FRAMING SHALL CONFORM TO STANDARD BUILDING PRACTICE PER THE 1994 UNIFORM BUILDING CODE (94 UBC). SPACING OF ANCHOR BOLTS PER DETAIL 5/S4.1 TYP. MINIMUM SPACING 8" OR DEPTH OF EMBEDMENT WHICH EVER IS GREATER AND MAXIMUM SPACING 24". EXPANSION OR EPOXY BOLTS CAN BE USED FOR ANCHOR BOLTS BUT NOT AT THE HOLD DOWNS, USE ALL THREAD W/ EPOXY AT HOLD DOWN LOCATIONS. COATINGS OF ANCHOR BOLTS AND ALL THREAD NOT REQUIRED.
FIRE BLOCKING REQUIRED IN ALL FRAMING AT 10' UNLESS NOTED OTHERWISE. STAINLESS NAILS REQUIRED ON EXTERIOR WALL FRAMING ONLY. PNEUMATIC NAILERS WILL BE ALLOWED IF THEY MEET THE LOAD REQUIREMENTS OF THE HAND DRIVEN EQUALIVENT, VINYAL COATED "SINKERS" SHALL NOT BE USED.

THE CONTRACTOR SHALL REVIEW, STAMP WITH HIS APPROVAL, DATE, AND SIGN ALL SHOP DRAWINGS REQUIRED BY THE CONTRACT DOCUMENTS PRIOR TO SUBMITTING TO THE OWNER. AT THE TIME OF SUBMISSION, THE CONTRACTOR SHALL INFORM THE OWNER IN WRITING OF ANY DEVIATION IN THE SHOP DRAWINGS FROM THE REQUIREMENTS OF THE CONTRACT DOCUMENTS.

SPECIAL INSPECTION:

THE FOLLOWING ITEMS REQUIRE SPECIAL INSPECTION DURING CONSTRUCTION PER UNIFORM BUILDING CODE CHAPTER 17.

1. ALL CONCRETE REINFORCING PLACEMENT PRIOR TO PLACEMENT OF CONCRETE.
2. ALL BOLTS INSTALLED IN CONCRETE PRIOR TO PLACEMENT OF CONCRETE.
3. ALL COMPLETE PENETRATION WELDS PERFORMED IN A FABRICATING SHOP OR IN THE FIELD SHALL BE RADIOGRAPHICALLY OR ULTRASONICALLY TESTED.
4. ALL SHOP WELDS OTHER THAN COMPLETE PENETRATION WELDS SHALL BE VISUALLY INSPECTED.
5. ALL FILLET WELDS MADE IN THE FIELD SHALL BE VISUALLY INSPECTED.
6. PERIODIC INSPECTIONS OF ROOF AND FLOOR DECKING SHALL BE PERFORMED.

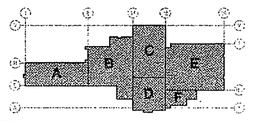

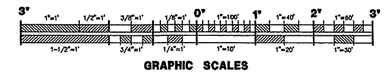

GRAPHIC SCALES

REFERENCE NO. S0.1

REV.	DATE	C.O.	ACTION	DESCRIPTION	BY	APP'D.

CONTRACTOR _____ CONTRACT NO. _____
CITY _____ STATE _____

RECOMMENDED: _____ PRIME CONTRACTOR
APPROVED: _____ RESIDENT ENGINEER
DATE:

USKH — A quarter century of design for Alaskans

ALASKA DISTRICT
CORPS OF ENGINEERS
ANCHORAGE, ALASKA

DESIGNED: MNA
DRAWN: DJR
TRACED:
CHECKED: BEH
SUBMITTED:
DR. SECT.

BEN EIELSON JR./SR. HIGH SCHOOL - PHASE 3
EIELSON AIR FORCE BASE, ALASKA
STRUCTURAL
AREA "E" - REFERENCE PLAN AND GENERAL STRUCTURAL NOTES

RECOMMENDED: CHIEF, MILITARY TECHNICAL ENGINEERING BRANCH
APPROVED: CHIEF ENGINEERING DIVISION
DATE:
SCALE: NONE
SPEC. NO.
DRAWING NUMBER 29-02-38
SHEET OF

CORPS OF ENGINEERS

U. S. ARMY

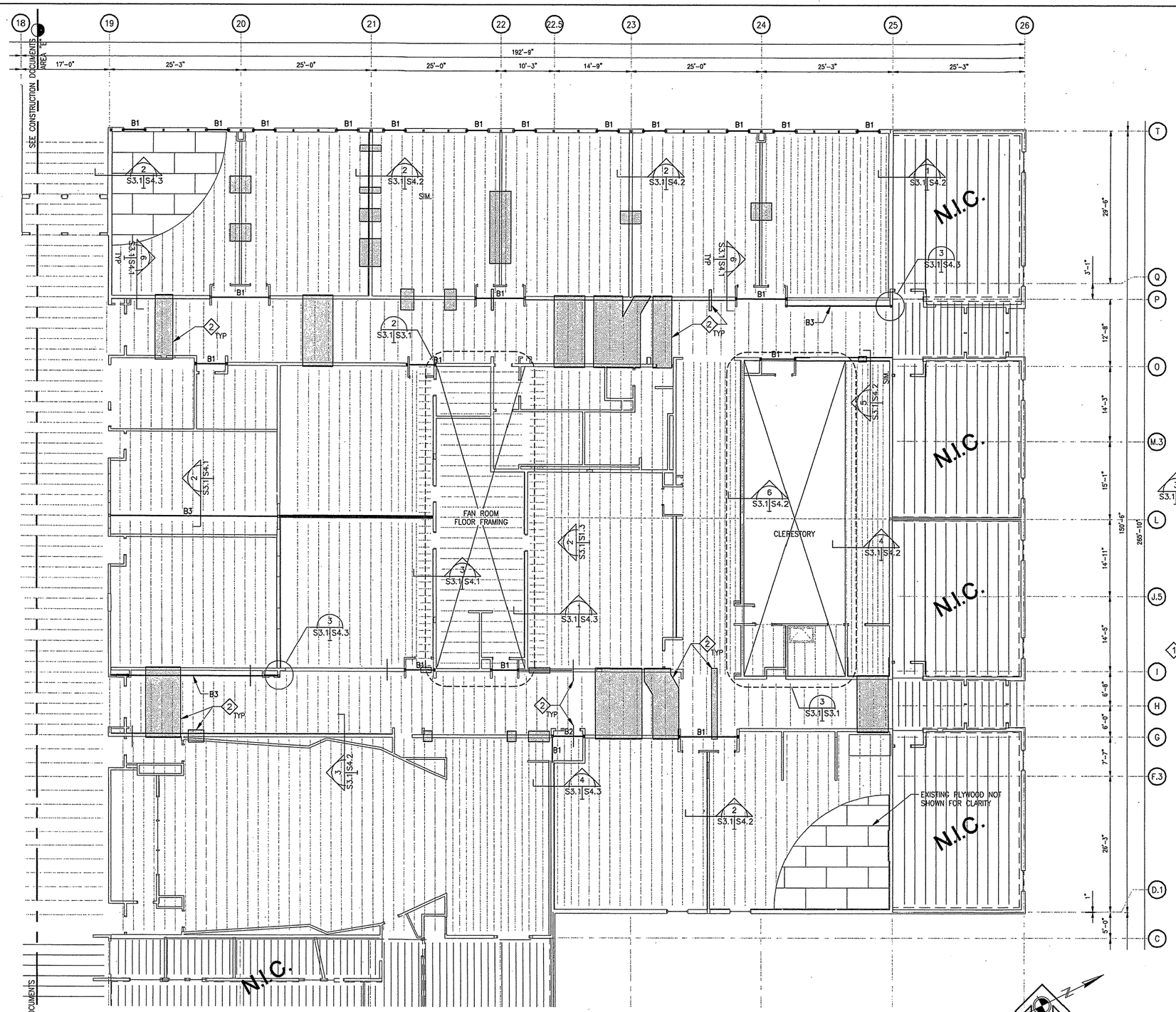

1 AREA "E" ROOF FRAMING PLAN
S0.1 S3.1
SCALE: 1/8"=1'-0"

PLAN NOTES

1. CS16 COIL STRAPPING BETWEEN FLOORS–TYPICAL ALL WALL ENDS AND CORNERS, CLERESTORY AND FAN ROOM ONLY. ADD COIL STRAP TO CONNECT WALL STUDS BETWEEN FLOORS, MINIMUM 24" OVERLAP WITH 20 TEK NAILS EACH MINIMUM.
2. EXISTING MECHANICAL PENETRATIONS ARE BASED UPON ASBUILT DRAWINGS. CONTRACTOR SHALL VERIFY LOCATIONS AND SIZES OF EXISTING AND NEW PENETRATIONS PRIOR TO CONSTRUCTION. NOTIFY THE STRUCTURAL ENGINEER OF ANY PENETRATIONS THRU EXISTING OR NEW SHEAR WALLS.
3. NEW 2x WALL TO REPLACE CURVED SECTION, SEE FRAMING DETAILS.

BEAM (B) SCHEDULE

MARK	BEAM SIZE	END CONNECTION	REMARKS
B1	5 1/8" X 15" GLULAM BEAM	SEE 5/S4.1	———
B2	5 1/8" X 21" GLULAM BEAM	SEE 5/S4.1	———
B3	W 12 X 50	SEE 3/S4.3	———

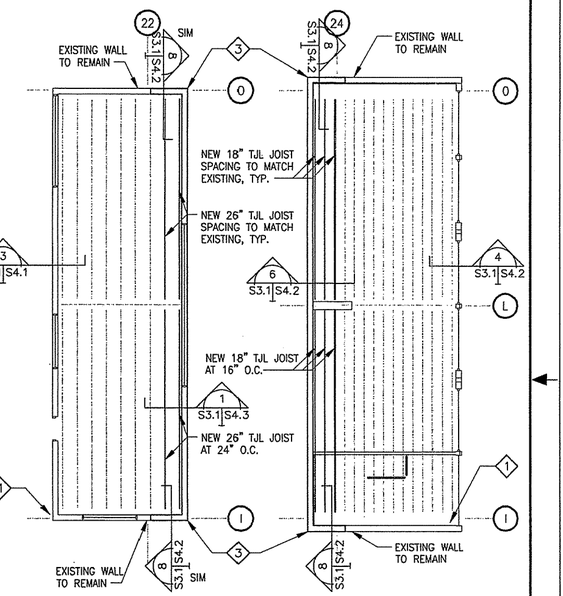

2 FAN ROOM ROOF FRAMING
S3.1 S3.1
SCALE: 1/8"=1'-0"

3 CLERESTORY ROOF FRAMING
S3.1 S3.1
SCALE: 1/8"=1'-0"

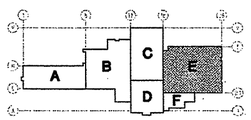

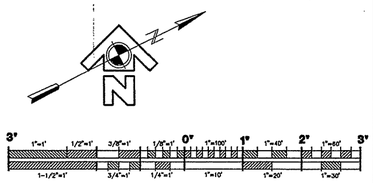

GRAPHIC SCALES

REFERENCE NO. S3.1

REV.	DATE	C.O.	ACTION	DESCRIPTION	BY	APP'D.

CONTRACT NO. _____

CONTRACTOR _____

CITY _____ STATE _____

RECOMMENDED: _____ PRIME CONTRACTOR

APPROVED: _____ RESIDENT ENGINEER

DATE:

USKH — A quarter century of design for Alaskans

ALASKA DISTRICT
CORPS OF ENGINEERS
ANCHORAGE, ALASKA

DESIGNED: MNA
DRAWN: DJR
TRACED:
CHECKED: BEH
SUBMITTED:
CH. SECT.

BEN EIELSON JR./SR. HIGH SCHOOL – PHASE 3
EIELSON AIR FORCE BASE, ALASKA
STRUCTURAL
AREA "E"
FRAMING PLANS

RECOMMENDED: _____ CHIEF, MILITARY TECHNICAL ENGINEERING BRANCH

APPROVED: _____ CHIEF ENGINEERING DIVISION

DATE:

SCALE: 1/8"=1'-0"

SPEC. NO.

DRAWING NUMBER
29-02-38

SHEET OF

CORPS OF ENGINEERS

U. S. ARMY

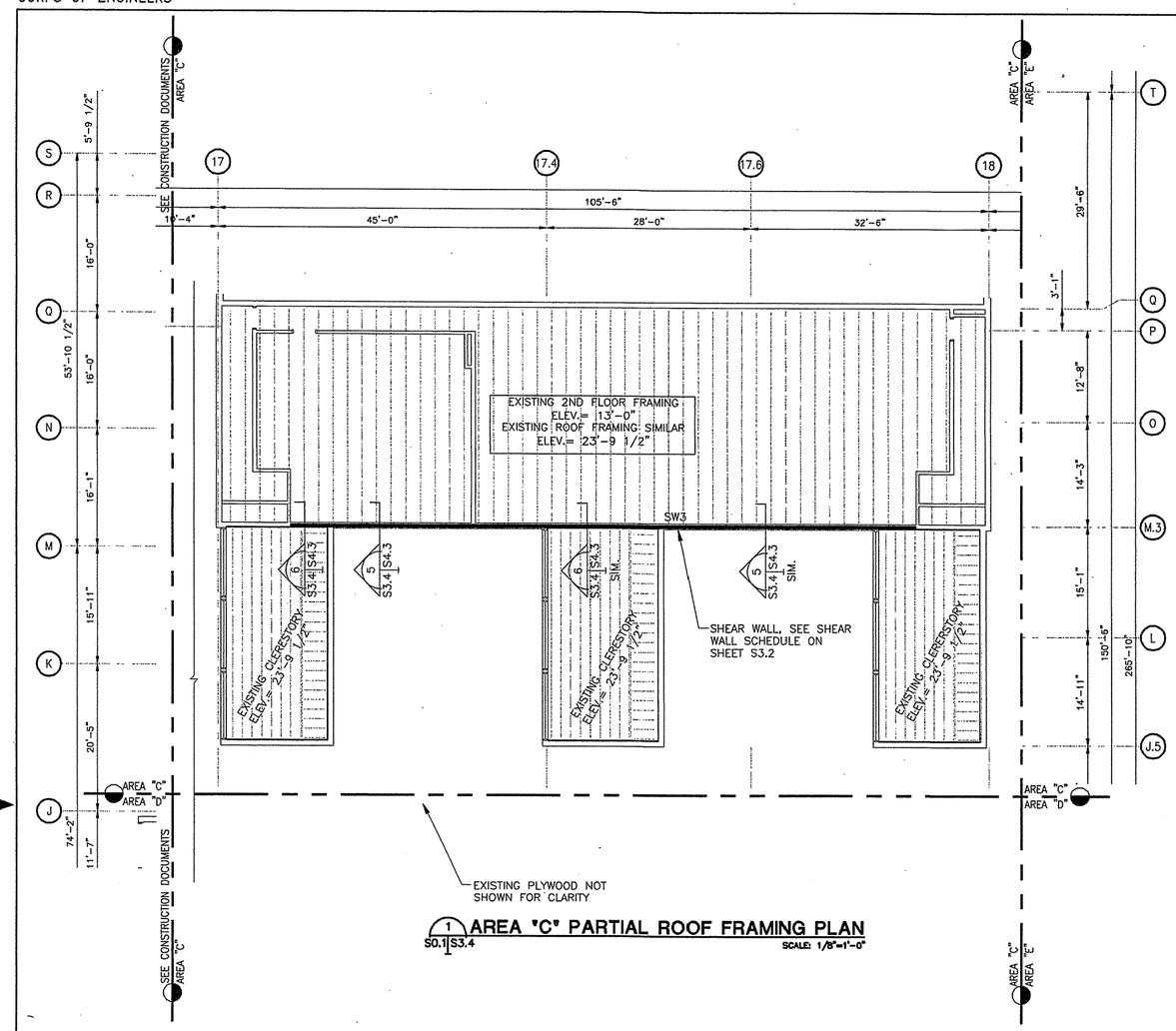

1 S0.1 S3.4 AREA "C" PARTIAL ROOF FRAMING PLAN

SCALE: 1/8"=1'-0"

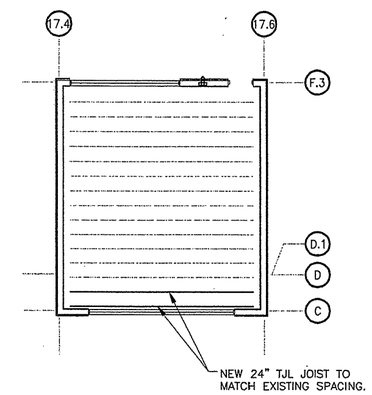

1 S0.1 S3.4 AREA "D" FAN ROOM ROOF FRAMING PLAN

SCALE: 1/8"=1'-0"

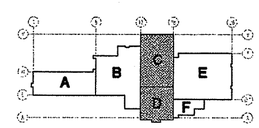

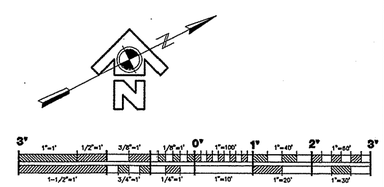

GRAPHIC SCALES

REFERENCE NO. S3.4

REV.	DATE	C.O.	ACTION	DESCRIPTION	BY	APP'D.

CONTRACT NO.

CONTRACTOR

CITY STATE

RECOMMENDED: PRIME CONTRACTOR

APPROVED: RESIDENT ENGINEER

DATE:

USKH A quarter century of design for Alaskans

ALASKA DISTRICT
CORPS OF ENGINEERS
ANCHORAGE, ALASKA

DESIGNED: MNA
DRAWN: DJR
TRACED:
CHECKED: BEH
SUBMITTED:
CH. SECT.

BEN EIELSON JR./SR. HIGH SCHOOL – PHASE 3
EIELSON AIR FORCE BASE, ALASKA
STRUCTURAL
AREA "C"
ROOF FRAMING PLAN

RECOMMENDED: CHIEF, MILITARY TECHNICAL ENGINEERING BRANCH

APPROVED: CHIEF ENGINEERING DIVISION

DATE:

SCALE: 1/8"=1'-0"

SPEC. NO.

DRAWING NUMBER
29-02-38

SHEET OF

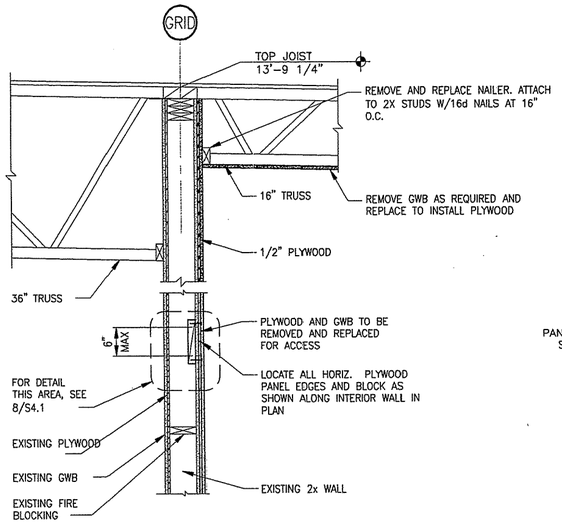

6 S3.1 S4.1 TYPICAL DETAIL

SCALE: 1"=1'-0"

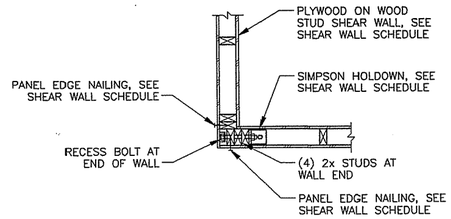

4 S3.1 S4.1 PLAN - TYPICAL END OF SHEAR WALL CONNECTION

SCALE: 1"=1'-0"

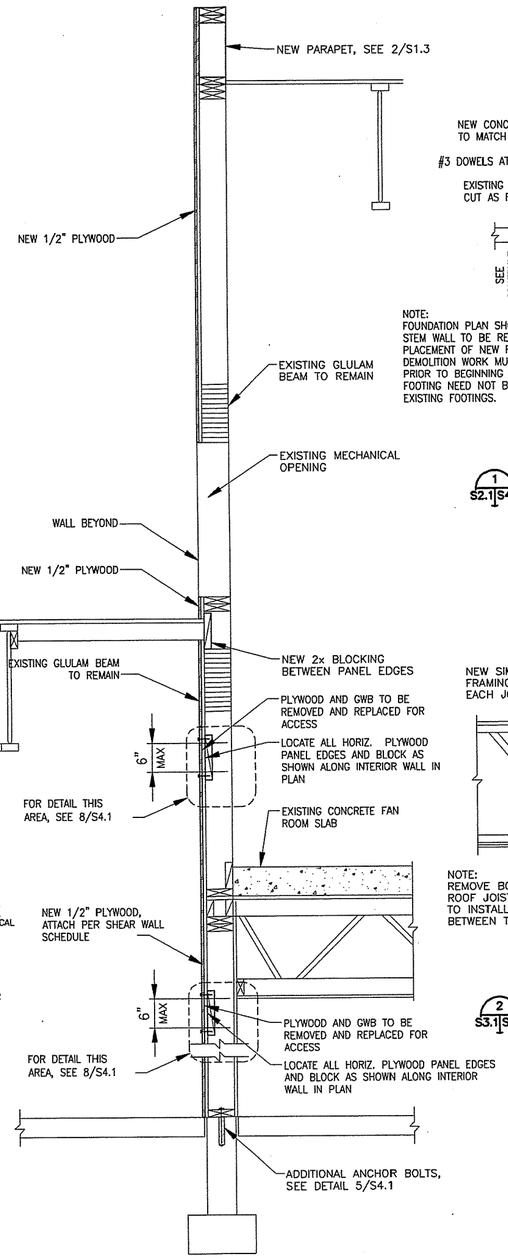

3 S3.1 S4.1 TYPICAL DETAIL

SCALE: 1"=1'-0"

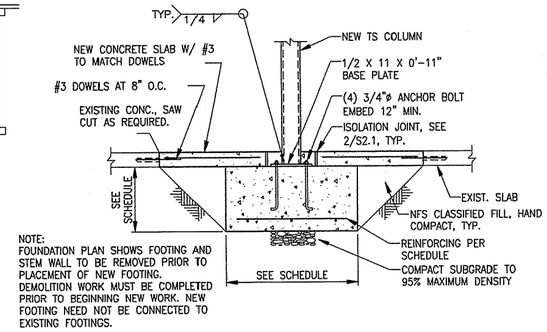

NOTE:
FOUNDATION PLAN SHOWS FOOTING AND STEM WALL TO BE REMOVED PRIOR TO PLACEMENT OF NEW FOOTING. DEMOLITION WORK MUST BE COMPLETED PRIOR TO BEGINNING NEW WORK. NEW FOOTING NEED NOT BE CONNECTED TO EXISTING FOOTINGS.

1 S2.1 S4.1 TYPICAL NEW INTERIOR COLUMN AT FOOTING

SCALE: 3/4"=1'-0"

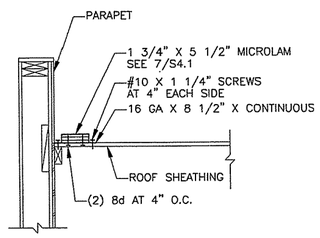

NOTE: AT PARAPET LOCATIONS, INSTALL DRAG STRUT AS SHOWN. AT OTHER LOCATIONS, INSTALL DRAG STRUT AT TOP OF WALL ABOVE ROOF SHEATHING. FOR FRAMING OF PARAPETS, ROOFS, OR WALLS, SEE PLANS AND DETAILS.

7 S3.3 S4.1 TYPICAL DRAGSTRUT AT ROOF

SCALE: NONE

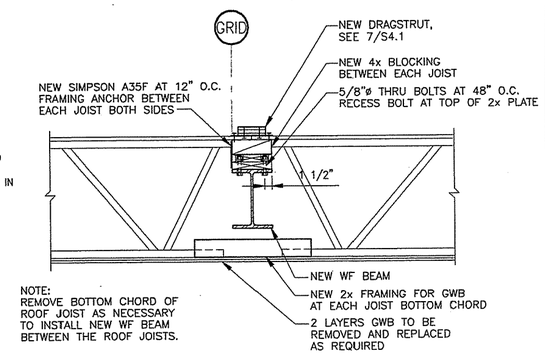

NOTE:
REMOVE BOTTOM CHORD OF ROOF JOIST AS NECESSARY TO INSTALL NEW WF BEAM BETWEEN THE ROOF JOISTS.

2 S3.1 S4.1 NEW BEAM AT EXISTING ROOF JOISTS

SCALE: 1"=1'-0"

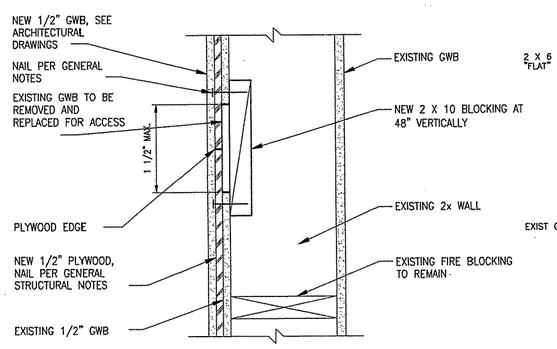

8 S4.1 S4.1 TYPICAL NEW BLOCKING IN EXISTING WALL

SCALE: NONE

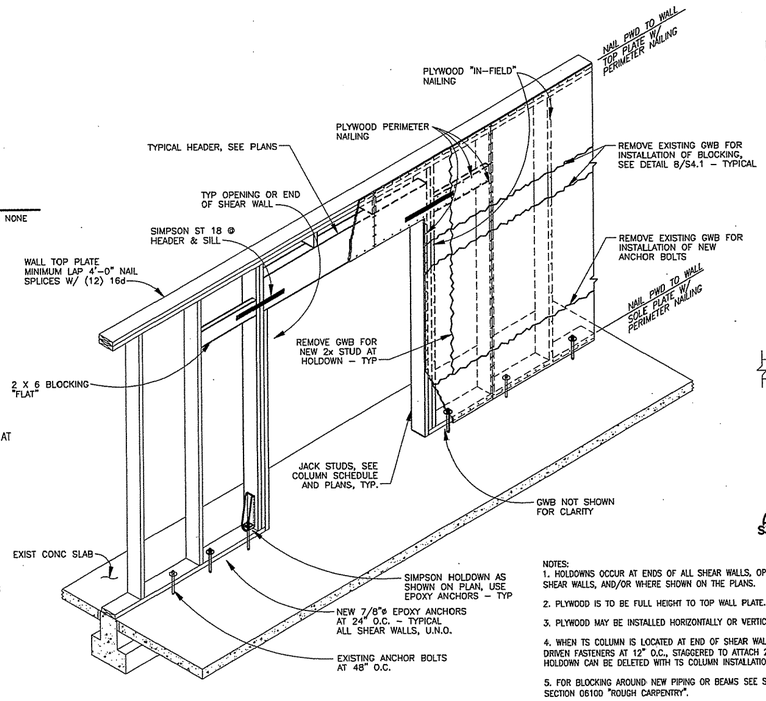

5 S3.1 S4.1 TYPICAL SHEAR WALL DESIGN

SCALE: 1"=1'-0"

NOTES:
1. HOLDOWNS OCCUR AT ENDS OF ALL SHEAR WALLS. OPENINGS IN SHEAR WALLS, AND/OR WHERE SHOWN ON THE PLANS.
2. PLYWOOD IS TO BE FULL HEIGHT TO TOP WALL PLATE.
3. PLYWOOD MAY BE INSTALLED HORIZONTALLY OR VERTICALLY.
4. WHEN TS COLUMN IS LOCATED AT END OF SHEAR WALL, USE POWDER DRIVEN FASTENERS AT 12" O.C., STAGGERED TO ATTACH 2x FRAMING. HOLDOWN CAN BE DELETED WITH TS COLUMN INSTALLATION.
5. FOR BLOCKING AROUND NEW PIPING OR BEAMS SEE SPECIFICATION SECTION 06100 "ROUGH CARPENTRY".
6. IN LIEU OF PARTIAL GWB REMOVAL ON SHEAR WALLS, CONTRACTOR MAY REMOVE ALL GWB TO INSTALL NEW SHEAR WALL COMPONENTS, I.E. BLOCKING, ANCHOR BOLTS, HOLDOWNS, ETC.

GRAPHIC SCALES

REFERENCE NO. S4.1

REV.	DATE	C.O.	ACTION	DESCRIPTION	BY	APP'D.

CONTRACT NO.

CONTRACTOR

CITY STATE

RECOMMENDED: PRIME CONTRACTOR | APPROVED: RESIDENT ENGINEER | DATE:

USKH — A quarter century of design for Alaskans

ALASKA DISTRICT
CORPS OF ENGINEERS
ANCHORAGE, ALASKA

DESIGNED: MNA
DRAWN: DJR
TRACED:
CHECKED: BEH
SUBMITTED:
CH. SECT.

BEN EIELSON JR./SR. HIGH SCHOOL - PHASE 3
EIELSON AIR FORCE BASE, ALASKA
STRUCTURAL
STRUCTURAL DETAILS

RECOMMENDED: CHIEF, MILITARY TECHNICAL ENGINEERING BRANCH | APPROVED: CHIEF ENGINEERING DIVISION | DATE:

SCALE: AS NOTED | SPEC. NO.

DRAWING NUMBER 29-02-38

SHEET OF

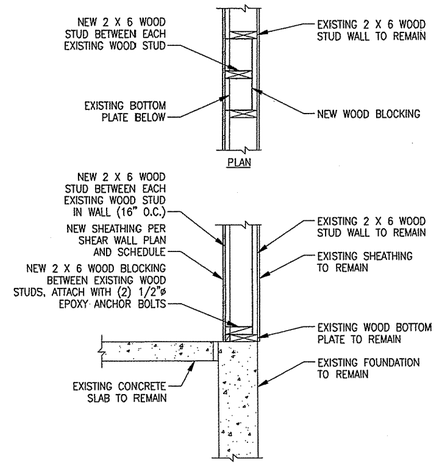

7 DETAIL
S3.1 S4.2
SCALE: 1"=1'-0"

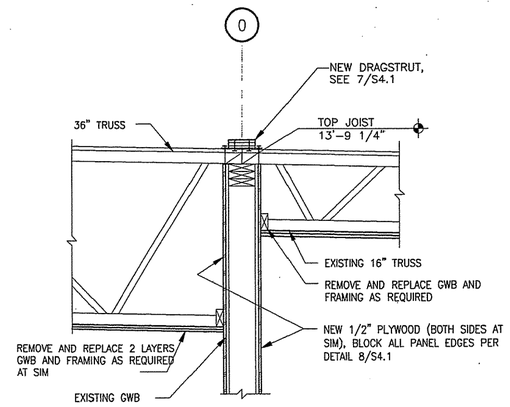

5 DETAIL
S3.1 S4.2
SCALE: 1"=1'-0"

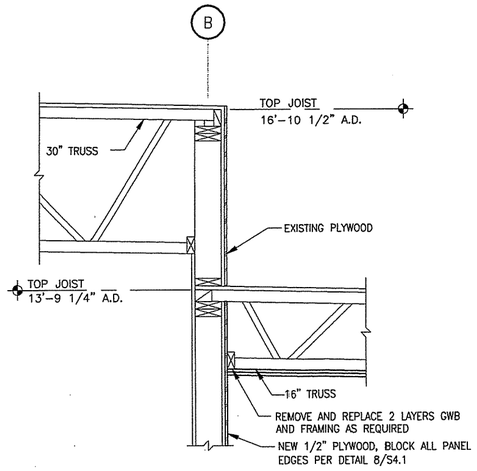

3 DETAIL
S3.1 S4.2
SCALE: 1"=1'-0"

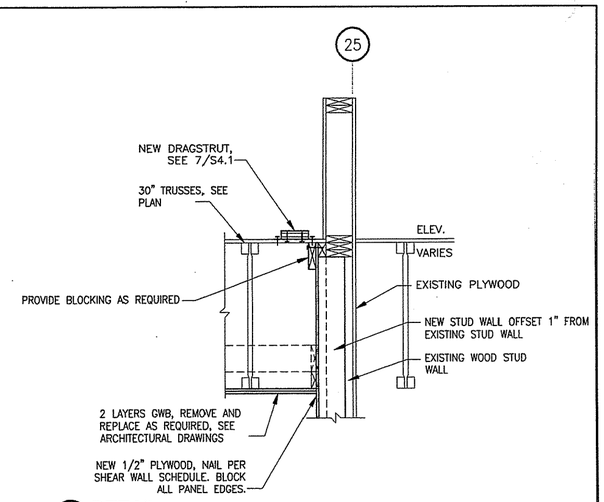

1 DETAIL
S3.1 S4.2
SCALE: 1"=1'-0"

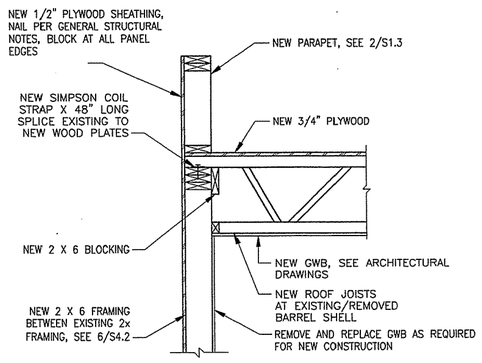

8 DETAIL
S3.1 S4.2
SCALE: 1"=1'-0"

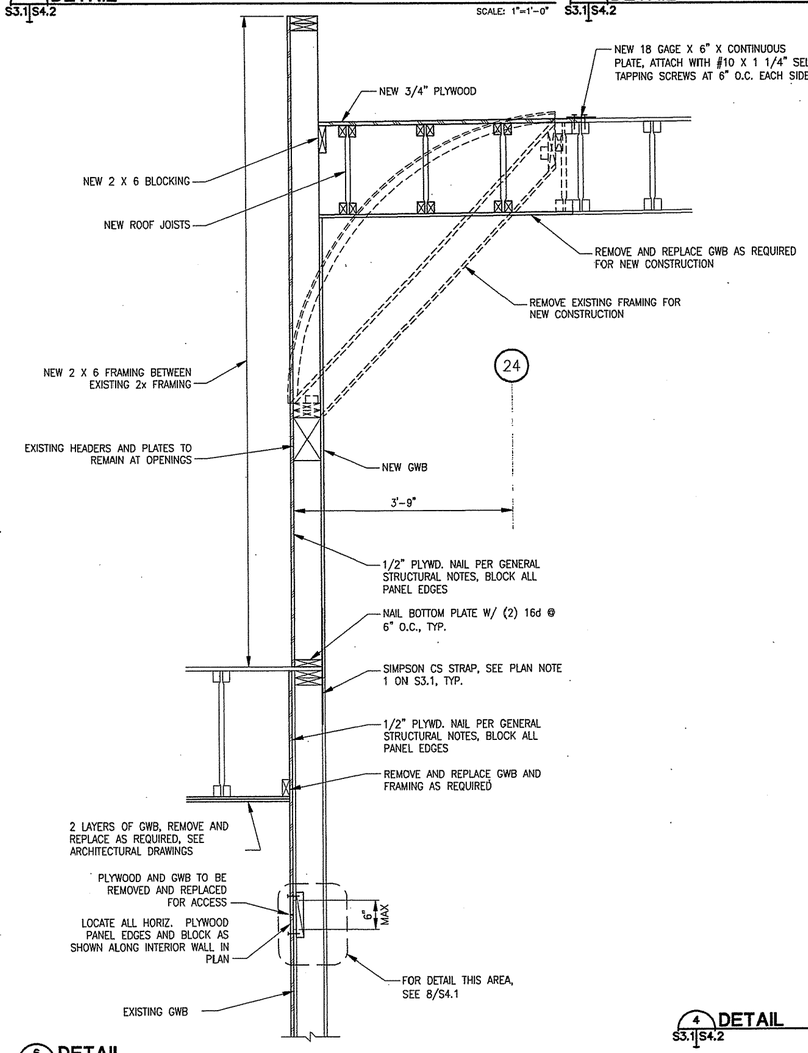

6 DETAIL
S3.1 S4.2
SCALE: 1"=1'-0"

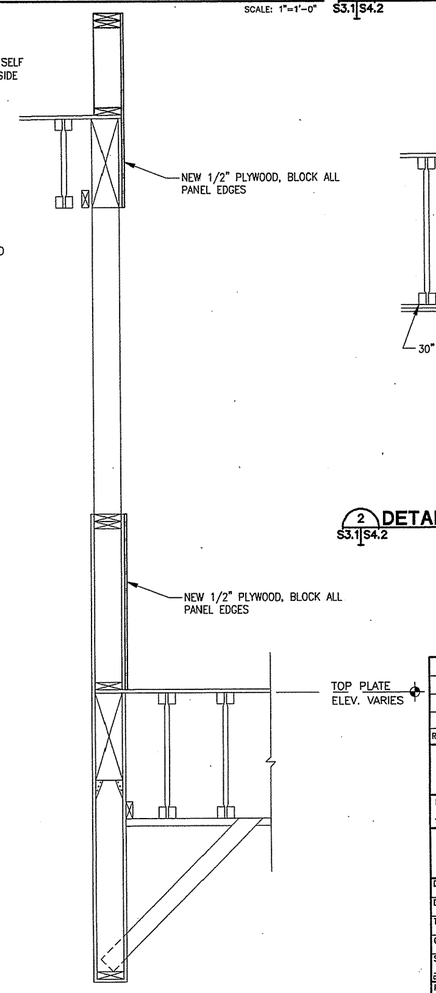

4 DETAIL
S3.1 S4.2
SCALE: 1"=1'-0"

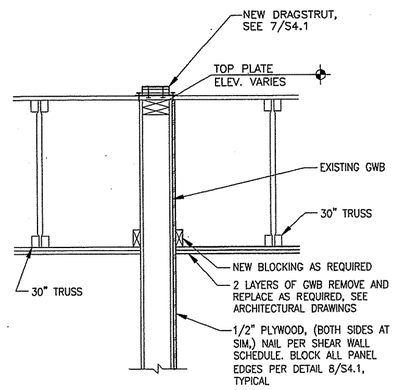

2 DETAIL
S3.1 S4.2
SCALE: 1"=1'-0"

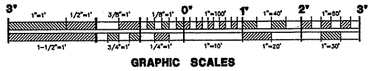

GRAPHIC SCALES

REV.	DATE	C.O.	ACTION	DESCRIPTION	BY	APP'D.

CONTRACT NO.
CONTRACTOR
CITY STATE

RECOMMENDED: (PRIME CONTRACTOR) APPROVED: (RESIDENT ENGINEER) DATE:

USKH — A quarter century of design for Alaskans

ALASKA DISTRICT
CORPS OF ENGINEERS
ANCHORAGE, ALASKA

DESIGNED: MNA
DRAWN: DJR
TRACED:
CHECKED: BEH
SUBMITTED:
CH. SECT.

BEN EIELSON JR./SR. HIGH SCHOOL – PHASE 3
EIELSON AIR FORCE BASE, ALASKA
STRUCTURAL
STRUCTURAL DETAILS

RECOMMENDED: (CHIEF, MILITARY TECHNICAL ENGINEERING BRANCH) APPROVED: (CHIEF ENGINEERING DIVISION) DATE:

SCALE: AS NOTED
SPEC. NO.
DRAWING NUMBER 29-02-38
SHEET OF

REFERENCE NO. S4.2

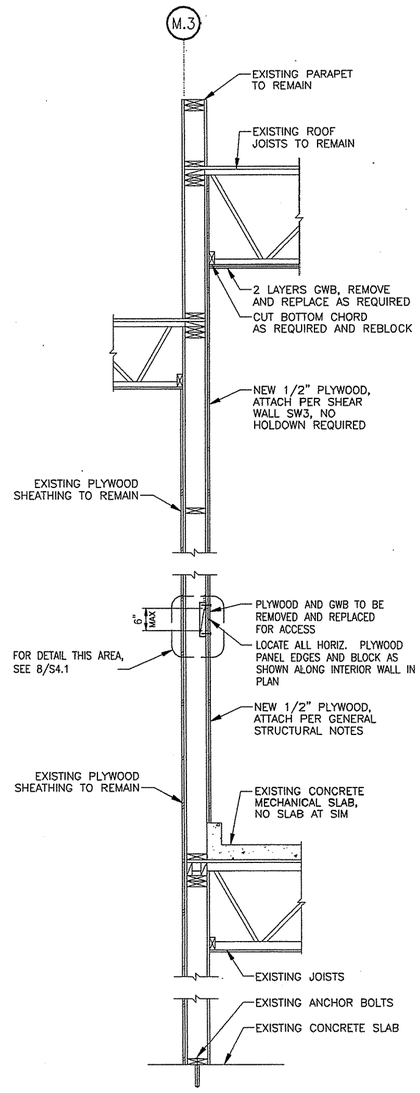

6 S3.1 S4.3 WALL SECTION

SCALE: 3/4"=1'-0"

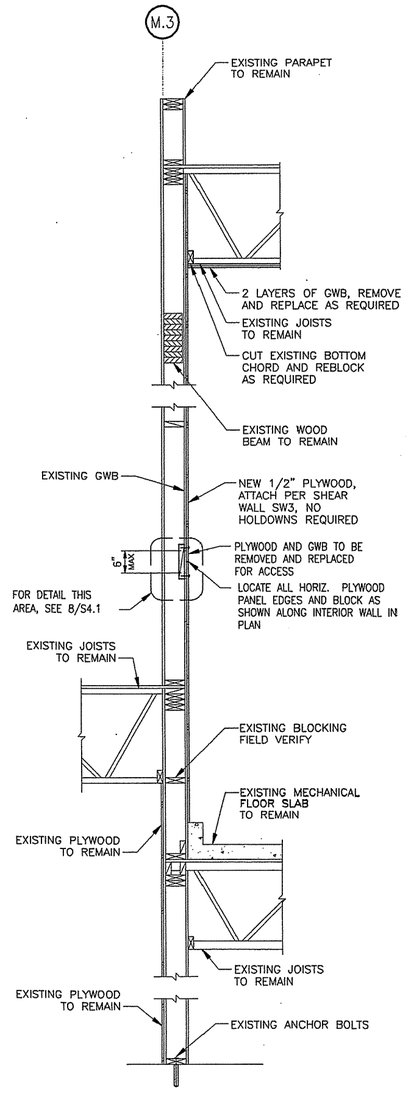

5 S3.1 S4.3 WALL SECTION

SCALE: 3/4"=1'-0"

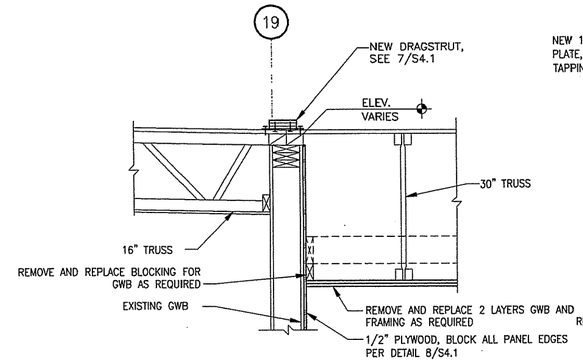

2 S3.1 S4.3 DETAIL

SCALE: 1"=1'-0"

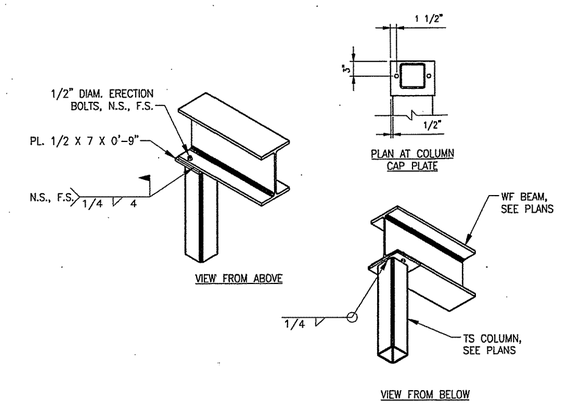

3 S3.1 S4.3 TYP. COLUMN TO WF CONNECTION

SCALE: 1"=1'-0"

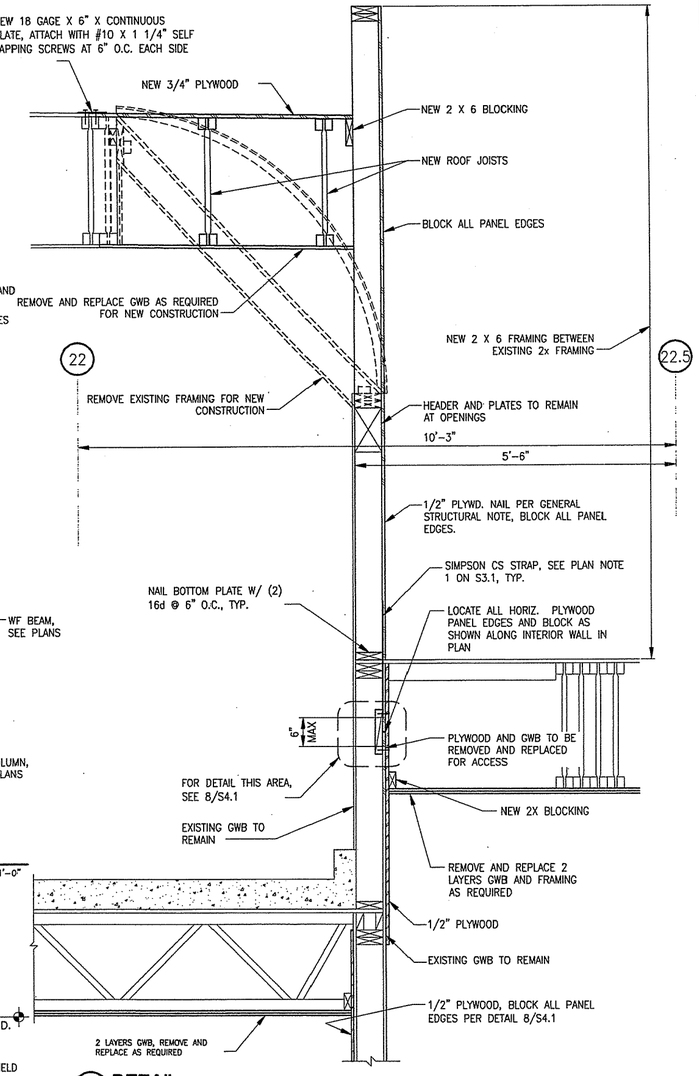

1 S3.1 S4.3 DETAIL

SCALE: 1"=1'-0"

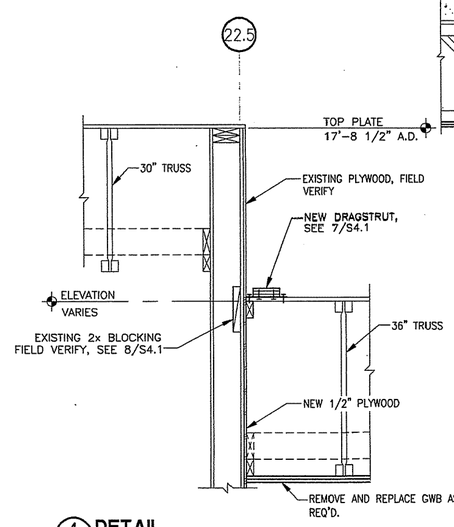

4 S3.1 S4.3 DETAIL

SCALE: 1"=1'-0"

REV.	DATE	C.O.	ACTION	DESCRIPTION	BY	APP'D.

CONTRACT NO.

CONTRACTOR

CITY STATE

RECOMMENDED: PRIME CONTRACTOR | APPROVED: RESIDENT ENGINEER | DATE:

USKH — A quarter century of design for Alaskans

ALASKA DISTRICT
CORPS OF ENGINEERS
ANCHORAGE, ALASKA

DESIGNED: MNA
DRAWN: DJR
TRACED:
CHECKED: BEH
SUBMITTED:
CH. SECT.

BEN EIELSON JR./SR. HIGH SCHOOL – PHASE 3
EIELSON AIR FORCE BASE, ALASKA
STRUCTURAL
STRUCTURAL DETAILS

RECOMMENDED: CHIEF, MILITARY TECHNICAL ENGINEERING BRANCH | APPROVED: CHIEF, ENGINEERING DIVISION | DATE:

SCALE: AS NOTED | SPEC. NO.

DRAWING NUMBER 28-02-38

SHEET OF

GRAPHIC SCALES

REFERENCE NO. S4.3