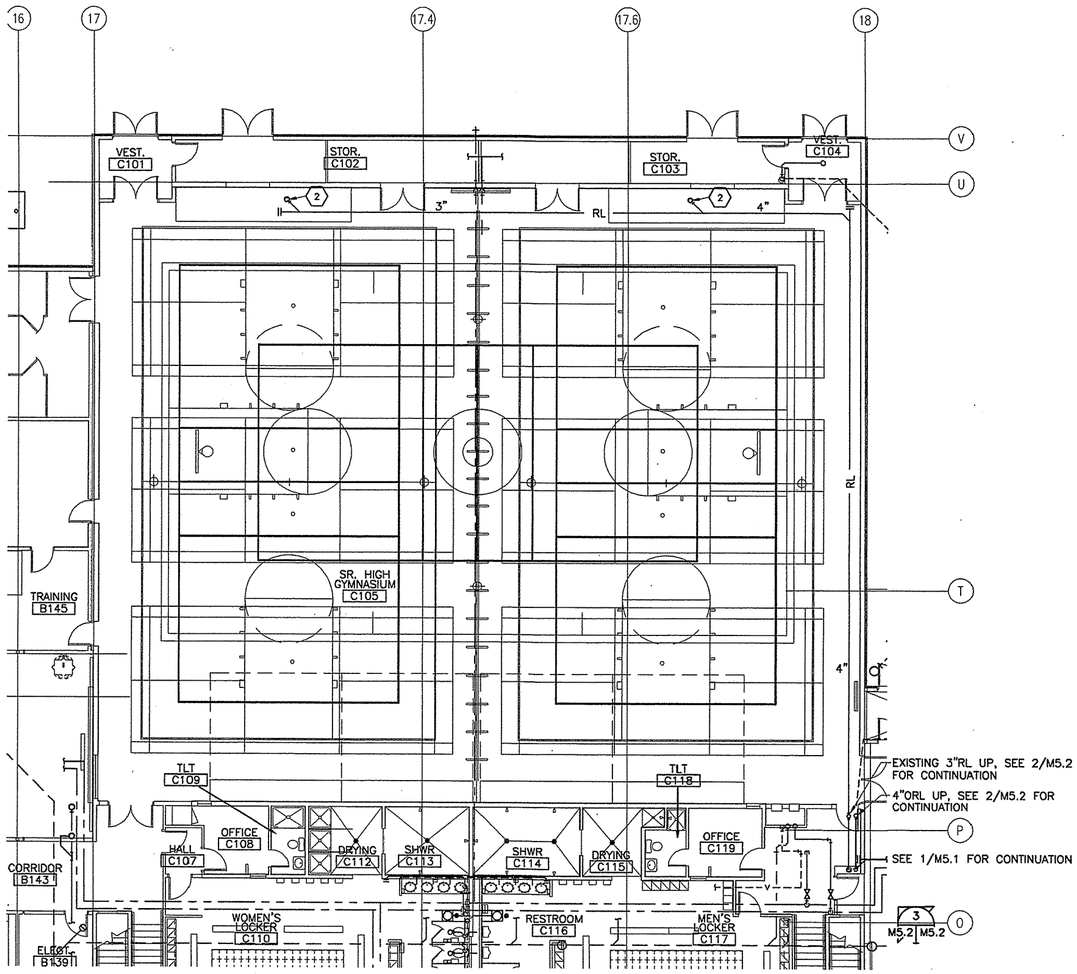

1 M5.2 M5.2 **GYMNASIUM RAIN LEADER PLAN**

SCALE: 1/8"=1'-0"

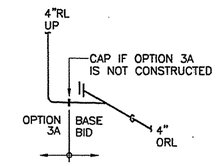

3 M5.2 M5.2 **ORL PIPING ISOMETRIC**

SCALE: NONE

SHEET NOTES
(1) NEW 4" ORL UP TO ORD-1. HEAT TRACE AND INSULATE.
(2) EXTEND EXISTING RL UP TO NEW 4" RD-1. PROVIDE REDUCERS AS REQUIRED. HEAT TRACE AND REINSULATE.
(3) REFERENCE DRAWING 1/A4.2. REPLACE EXISTING FLOOR SINK WITH NEW FLOOR SINK IN JANITOR'S ROOM NEAR GRID 18/H. NEW FLOOR SINK IS FURNISHED BY SCHOOL DISTRICT, INSTALLED BY CONTRACTOR. COORDINATE WITH COE TO OBTAIN FLOOR SINK.

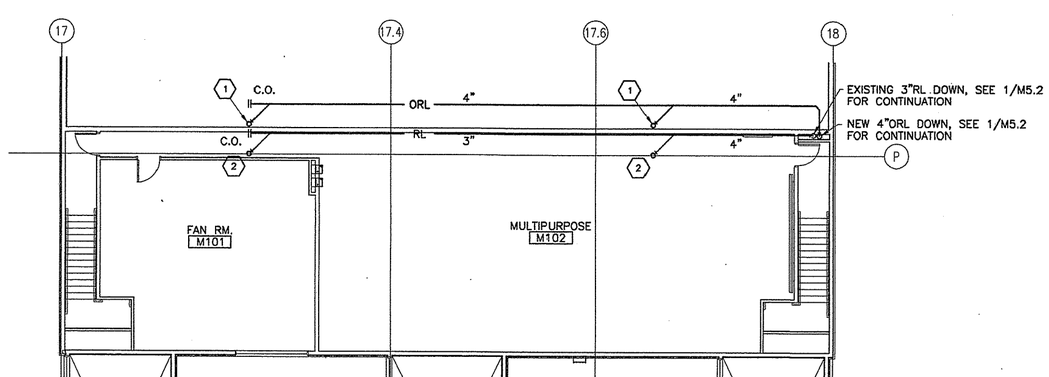

2 M5.2 M5.2 **MEZZANINE RAIN LEADER PLAN**

SCALE: 1/8"=1'-0"

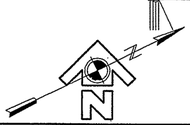

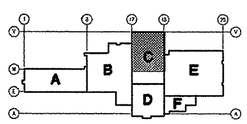

REV.	DATE	C.O.	ACTION	DESCRIPTION	BY	APP'D.

CONTRACT NO.

CONTRACTOR

CITY STATE

RECOMMENDED: PRIME CONTRACTOR

APPROVED: RESIDENT ENGINEER

DATE:

USKH — A quarter century of design for Alaskans

ALASKA DISTRICT
CORPS OF ENGINEERS
ANCHORAGE, ALASKA

DESIGNED: SVB
DRAWN: LDS
TRACED:
CHECKED: SVB
SUBMITTED:
CH. SECT.

BEN EIELSON JR./SR. HIGH SCHOOL – PHASE 3
EIELSON AIR FORCE BASE, ALASKA
MECHANICAL
PLUMBING PLANS AND DETAILS

RECOMMENDED: CHIEF, MILITARY TECHNICAL ENGINEERING BRANCH

APPROVED: CHIEF ENGINEERING DIVISION

DATE:

SCALE: AS SHOWN

SPEC. NO.

DRAWING NUMBER 29-02-38

SHEET OF

507202M52 (1=1)

REFERENCE NO. M5.2