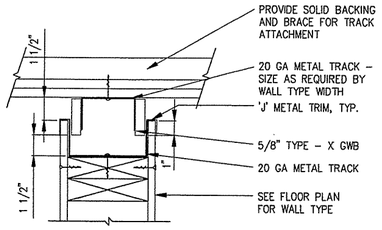

15 COMPRESSION DETAIL
A9.3 SCALE: 3"=1'-0"

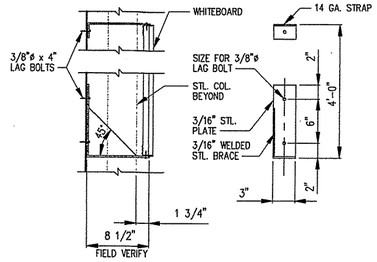

NOTE: LOCATE BRACKET/STRAPS @ 24" O.C. MIN. – ALIGN WITH EXISTING WALL STUDS – ENSURE BRACKET/STRAP IS LOCATED @ PLYWOOD BACKER BUTT JOINTS.

11 WHITEBOARD BRACKET
A9.3 SCALE: 1 1/2"=1'-0"

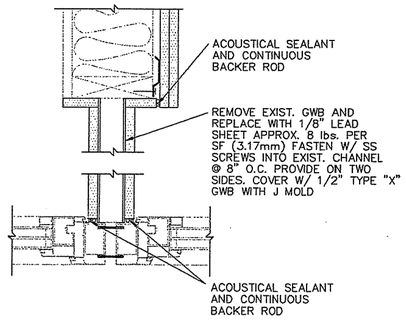

7 WINDOW JAMB DETAIL
A4.1 A9.3 SCALE: 3"=1'-0"

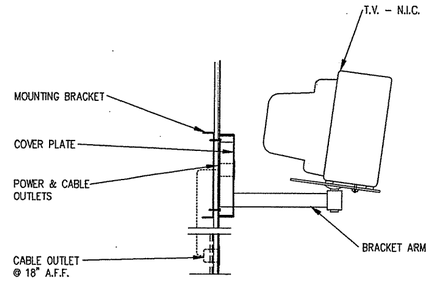

4 TV BRACKET DETAIL
A9.3 SCALE: 3"=1'-0"

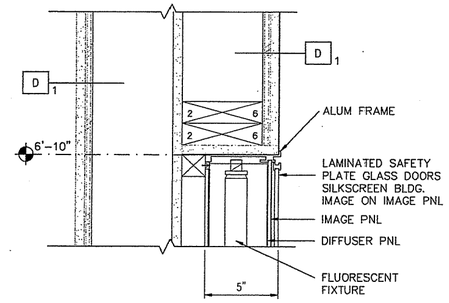

1 DIRECTORY EDGE DETAIL
A9.3 SCALE: 3"=1'-0"

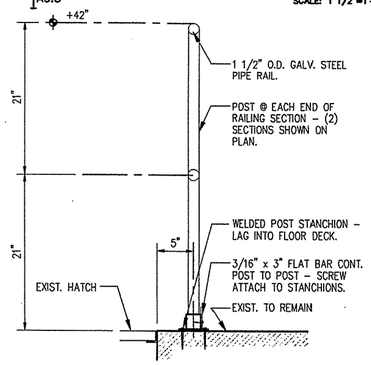

12 GUARDRAIL DETAIL
A2.2 A9.3 SCALE: 1 1/2"=1'-0"

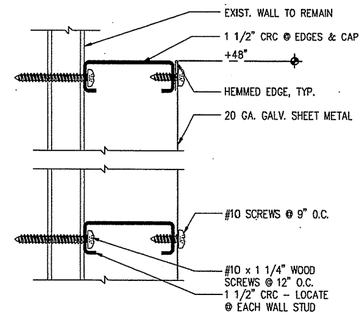

8 HEAT SHEILD DETAIL
A2.2 A4.2 A9.3 SCALE: 1"=1"

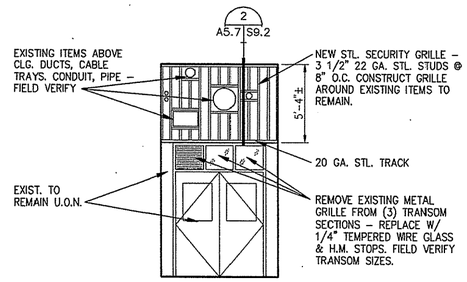

5 SECURITY GRATE ELEV.
A9.3 SCALE: 1/4"=1'-0"

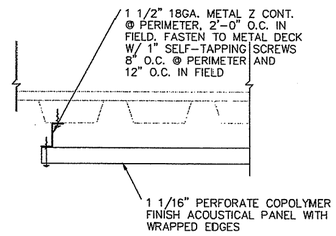

2 PANEL EDGE DETAIL
A9.3 SCALE: 3"=1'-0"

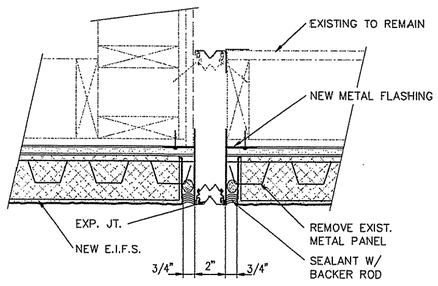

13 SEISMIC JOINT DETAIL
A9.3 SCALE:

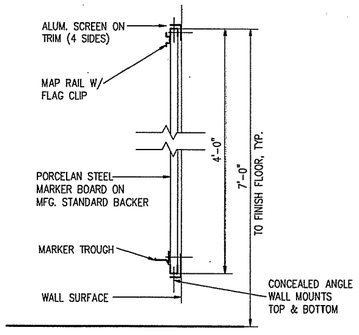

9 WHITEBOARD DETAIL
A9.3 SCALE: 1-1/2"=1'-0"

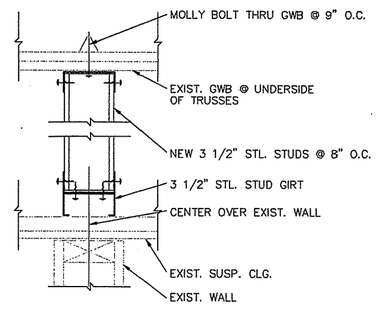

6 SECURITY GRATE DETAIL
A9.3 SCALE: 3"=1'-0"

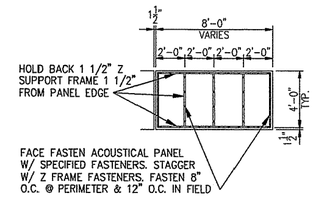

3 ACOUSTICAL PANEL
A9.3 SCALE: 1/4"=1'-0"

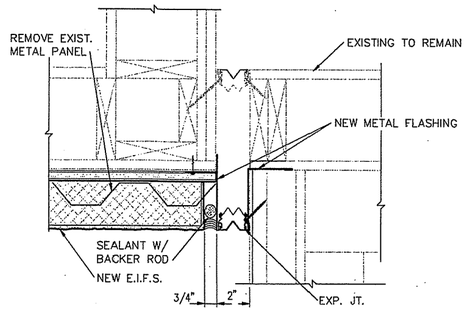

14 SEISMIC JOINT DETAIL
A9.3 SCALE:

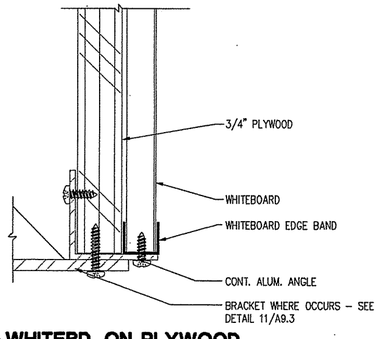

10 WHITEBD. ON PLYWOOD
A9.3 SCALE: 1"=1"

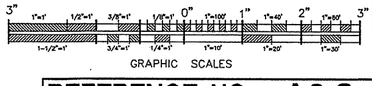

GRAPHIC SCALES

REFERENCE NO. A9.3

REV.	DATE	C.O.	ACTION	DESCRIPTION	BY	APP'D.

CONTRACT NO.

CONTRACTOR

CITY STATE

RECOMMENDED: PRIME CONTRACTOR | APPROVED: RESIDENT ENGINEER | DATE:

USKH — A quarter century of design for Alaska

ALASKA DISTRICT
CORPS OF ENGINEERS
ANCHORAGE, ALASKA

DESIGNED: HAP
DRAWN: MAF
TRACED:
CHECKED: JAH
SUBMITTED:
CH. SECT.

BEN EIELSON JR./SR. HIGH SCHOOL – PHASE 3
EIELSON AIR FORCE BASE, ALASKA
ARCHITECTURAL

MISCELLANEOUS DETAILS

RECOMMENDED: CHIEF, MILITARY TECHNICAL ENGINEERING BRANCH | APPROVED: CHIEF ENGINEERING DIVISION | DATE:

SCALE: AS SHOWN | SPEC. NO.

DRAWING NUMBER 29-02-38

SHEET OF