June 11, 2026
140FGA26Q0034

U.S. Fish and Wildlife Service

Charles M. Russell National Wildlife Refuge
Bobcat Creek Boundary Fence Construction

Location: Work is located on the Charles M. Russell National Wildlife Refuge (CMR) in McCone and Garfield Counties, State of Montana. Prospective bidders may inspect the site by contacting the CMR Fort Peck Field Station, 270 MT Hwy 117. Telephone 406-526-3464, ext. 201. Normal duty hours for Refuge staff is Monday thru Friday 7:00 a.m. - 4:30 p.m. Work location is shown on attached map.

Contractors are urged to visit the work site and become familiar with existing conditions. Failure of the contractor to ascertain the nature, location, and conditions which will affect the work will not relieve them from the responsibility of successfully performing the requirements of the contract without additional expense to the U.S. Fish and Wildlife Service.

Description of work: The Contractor shall provide all personnel, equipment, supplies, facilities, transportation, tools, materials, supervision, and other items and non-personal services necessary to construct, modify, and remove boundary and interior fence in the Habitat Unit referred to as Bobcat Creek Habitat Management Unit.

Project includes approximately 1.6 miles of new boundary fence construction (where fence doesn't currently exist), 1.8 miles of old fence removal/replace with new, 2 miles of fence modification (replace bottom barbed wire with smooth wire), and 9 miles of complete fence removal, (see attached map). The fence is generally located on Bobcat Point near the town of Fort Peck, MT.

Construction of new fence will be with 4 strands; the top 3 wires will be barbed wire and the bottom wire will be barbless. The Contractor is responsible for removing all old fence materials, including wire, wood posts, braces, hardware, and associated debris, and disposing of materials at an approved off-site disposal location.

Period of Performance: Project will start as soon as possible after notice to proceed with completion of project by June 30, 2027.

Job conditions: Fence lines traverse terrain that may be wet, muddy or uneven. There are numerous drainages, both small and large, rises and falls, loose, rocky and compacted soil. Access can be limited by weather as roads are often impassable when wet.

The contractor will, if necessary, clear fence lines of trees, brush, and other obstructions large enough to hinder construction operations. Fence lines may be cleared to a maximum of 4 feet on each side of the fence. On interior fence lines where there is U.S. Fish and Wildlife Service (USFWS) Federal land on both sides, clearing may be done on either or both sides of the fence. On boundary fence lines where there is USFWS Federal land on only one side, clearing may only be done on the USFWS Federal land side. Existing grass, sod, and other vegetation shall be disturbed as little as possible.

Construction Specifications:
*See **Appendix 1** for further specifications.*

General: T-Posts (Steel) shall not be used for end-panel, corner-panel, gate-panel, or stress-panel. Posts shall be installed plumb, to the designated depth, and the lateral alignment shall be within plus or minus ½ inch. T-Post spacing shall be 1 rod (16 1/2 feet) between posts. T-posts may only deviate 6 inches from the 1 rod spacing except (due to the topography of the ground) when closer spacing is needed to attain specified wire heights. Drive T-Posts into the ground until the anchor plate is slightly below the ground surface.

Corner Panel, End Panel, and Stress Panel Assemblies: All structures shall be constructed with steel tubing.

Wire: Fence shall consist of four (4) strands of wire at heights of 18 inches, 24 inches, 30 inches, and 42 inches above ground level. The bottom strand (18") shall be barbless wire. The upper three strands (24", 30" and 42") shall be barbed wire. Stretch tightly and securely attach to steel post or structures. Wire shall be stretched to manufacturer-recommended tension sufficient to prevent sagging while maintaining elasticity. Terminate wire at each end post, gate post, corner post, or stress panel by wrapping around the post a minimum of two times and tie off by wrapping incoming wire a minimum of five times.

Wire Gates: Replace wood gate sticks with steel tubing.

Panel or dead man at minor depression: Dead man shall be constructed of barbless wire bent in two and wound around the three wires in the fence and attached to a full length steel post. The wire shall be wrapped around the steel post a minimum of 2 times, and then wrapped around itself a minimum of five times. The post shall be driven 4 feet underground at a 45-degree angle with 1-1/2 feet extended above ground level. In extreme conditions, two steel posts shall be used and shall be positioned opposite one another to form a 90-degree angle between the two posts for maximum holding power.

Deviations:
 Line post may not deviate more than 6 inches on spacing, except closer when needed to achieve specified wire heights
 All posts shall not deviate more than 1 inch from plumb or specified height above ground
 Wire spacing may not deviate more than 2 inches from that specified
 The center of no post shall be more than 3 inches out of alignment between quarter-mile stakes set by government
 Splicing – Use wrap or telephone-type splice using at least five complete turns in each direction. Do not pull wire around corners

End Results/Deliverables: The Contractor will arrange an on-ground inspection with Refuge personnel to assure that the fence is constructed/modified according to the contract specifications, including materials and placement. The finished work should be sturdy with the posts secure, and all components properly installed. All gates shall be properly hung with hinges aligned and secure. Latches shall function without binding and allow secure closure. Upon completion of the project, the work area shall be free of rubbish and debris, and if there are any disturbed areas they be restored to their original condition. Contractor shall immediately notify Refuge personnel of any unstable soils, erosion features, or safety hazards encountered during construction that may require alignment adjustment.

Appendix 1. Construction Specifications

BARBED WIRE FENCE (ALL STEEL 3 WIRE)

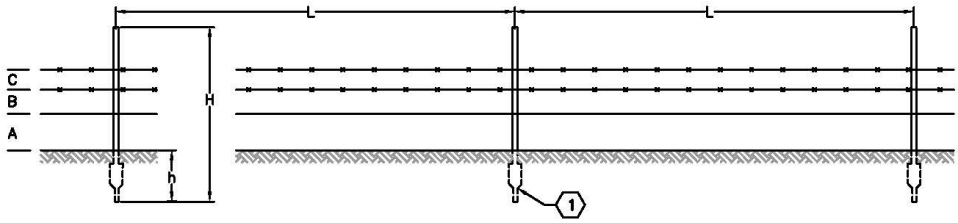

BARBED WIRE FENCE (ALL STEEL 4 WIRE)

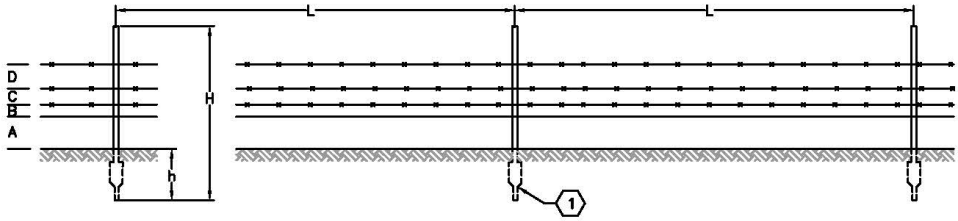

GENERAL NOTES:

1. SEE SPECIFICATIONS FOR THE FOLLOWING:
   I. POST SPACING, LENGTH & DEPTH IN GROUND
   II. TYPE OF WIRE TO BE UTILIZED
   III. SPACING BETWEEN WIRES
2. DRAWING IS NOT DRAWN TO SCALE

KEY NOTES:
(1) STEEL LINE POST SHALL BE 5-1/2 FT. CERTIFIED 1.33 LBS/FT MINIMUM AND COLORED ACCORDING TO SPECIFICATIONS

THINK SAFETY FIRST

AUTOCAD NAME: 2021 STEEL DRAWINGS.DWG		MARK	REVISION	APPROVED
DESIGN OFFICE: EMDDO				
DESIGNED BY: BF	DATE: 01/25/2021			
DRAWN BY: BF	DATE: 01/25/2021			
CHECKED BY:	DATE:			
APPROVED BY:	DATE:			

UNITED STATES DEPARTMENT OF THE INTERIOR
BUREAU OF LAND MANAGEMENT
BARBED WIRE FENCE (3 AND 4 WIRE)
MILES CITY FIELD OFFICE MONTANA

SHEET__ OF__

2 POST END PANEL

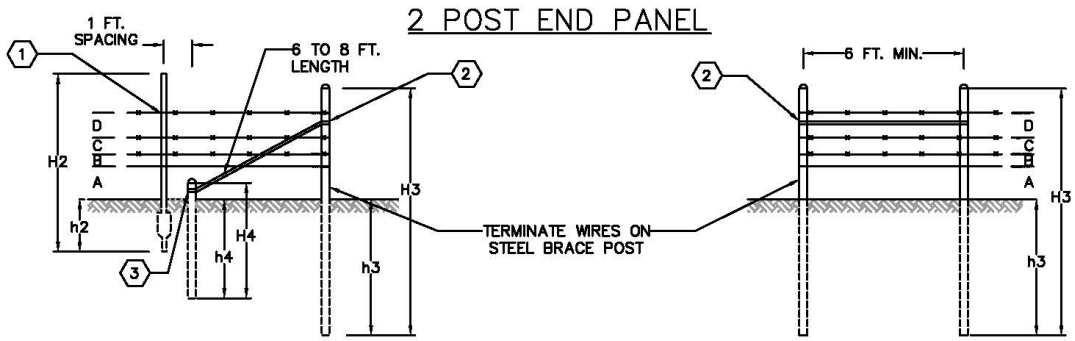

TYPE A TYPE B

3 POST STRESS PANELS

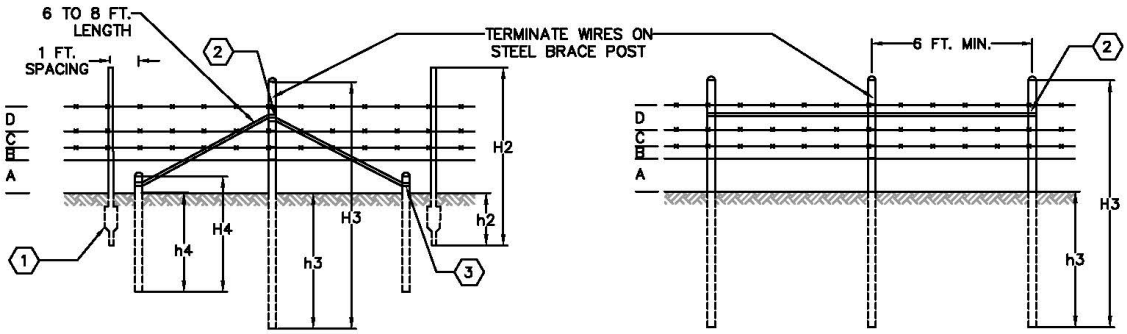

TYPE A TYPE B

GENERAL NOTES:
1. ALL STEEL BRACE POSTS WILL BE CAPPED BY GOVERNMENT.
2. SEE SPECIFICATIONS FOR THE FOLLOWING:
   I. RATIO OF STEEL TO WOOD LINE POSTS
   II. POST SPACING, LENGTH & DEPTH IN GROUND
   III. TYPE OF WIRE TO BE UTILIZED
   IV. SPACING BETWEEN WIRES
3. DRAWING IS NOT DRAWN TO SCALE

KEY NOTES:
1. STEEL LINE POST SHALL BE 5-1/2 FT. CERTIFIED 1.33 LBS/FT MINIMUM AND COLORED ACCORDING TO SPECIFICATIONS
2. BRACE RAIL BANDS ATTACH 4 TO 6 IN. BELOW TOP WIRE HEIGHT
3. BRACE RAIL BAND ATTACH 3 IN. MAXIMUM ABOVE GROUND SURFACE

THINK SAFETY FIRST

AUTOCAD NAME: 2021 STEEL DRAWINGS.DWG		MARK	REVISION	APPROVED
DESIGN OFFICE: EMDDO				
DESIGNED BY: BF	DATE: 02/13/2020			
DRAWN BY: BF	DATE: 02/13/2020			
CHECKED BY: GS	DATE: 02/28/2020			
APPROVED BY: GS	DATE: 02/28/2020			

UNITED STATES DEPARTMENT OF THE INTERIOR
BUREAU OF LAND MANAGEMENT
BARBED WIRE FENCE PANELS (STEEL)
MILES CITY FIELD OFFICE MONTANA

SHEET__ OF__

3–POST CORNER PANEL

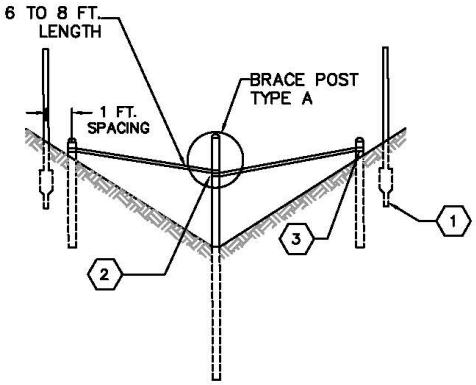

TYPE A

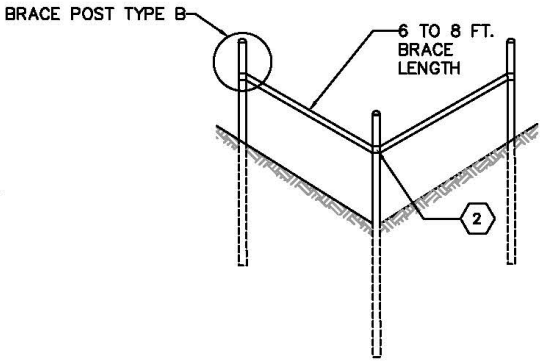

TYPE B

STEEL BRACE POST

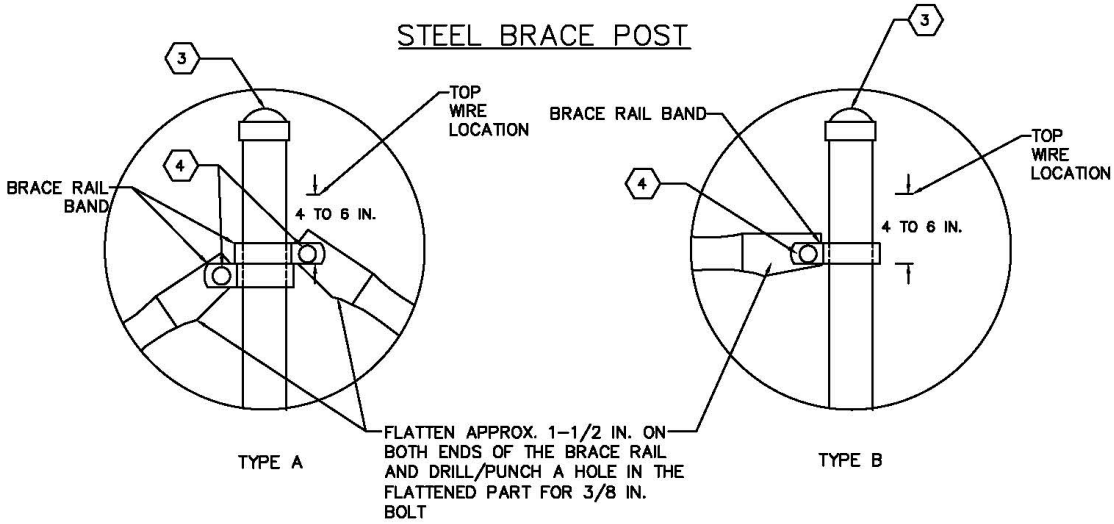

TYPE A

TYPE B

GENERAL NOTES:
1. NUMBER OF WIRES, TYPE OF WIRE, AND WIRE SPACING SAME AS FOR FENCE.
2. DRAWING IS NOT DRAWN TO SCALE.

KEY NOTES:
1. STEEL LINE POST SHALL BE 5–1/2 FT. CERTIFIED 1.33 LBS/FT MINIMUM AND COLORED ACCORDING TO SPECIFICATIONS
2. BRACE RAIL BANDS ATTACH 4 TO 6 IN. BELOW TOP WIRE HEIGHT
3. STEEL BRACE POST WILL BE CAPPED BY THE GOVERNMENT
4. 3/8 IN. GALVANIZED GRADE 5 CARRIAGE BOLT TYP.

THINK SAFETY FIRST

AUTOCAD NAME:2021 STEEL DRAWINGS.DWG		MARK	REVISION	APPROVED
DESIGN OFFICE: EMDDO				
DESIGNED BY: BF	DATE: 02/18/2020			
DRAWN BY: BF	DATE: 02/18/2020			
CHECKED BY: GS	DATE: 02/28/2020			
APPROVED BY: GS	DATE: 02/28/2020			

UNITED STATES DEPARTMENT OF THE INTERIOR
BUREAU OF LAND MANAGEMENT
CORNER PANELS (STEEL)
MILES CITY FIELD OFFICE MONTANA

SHEET__ OF__

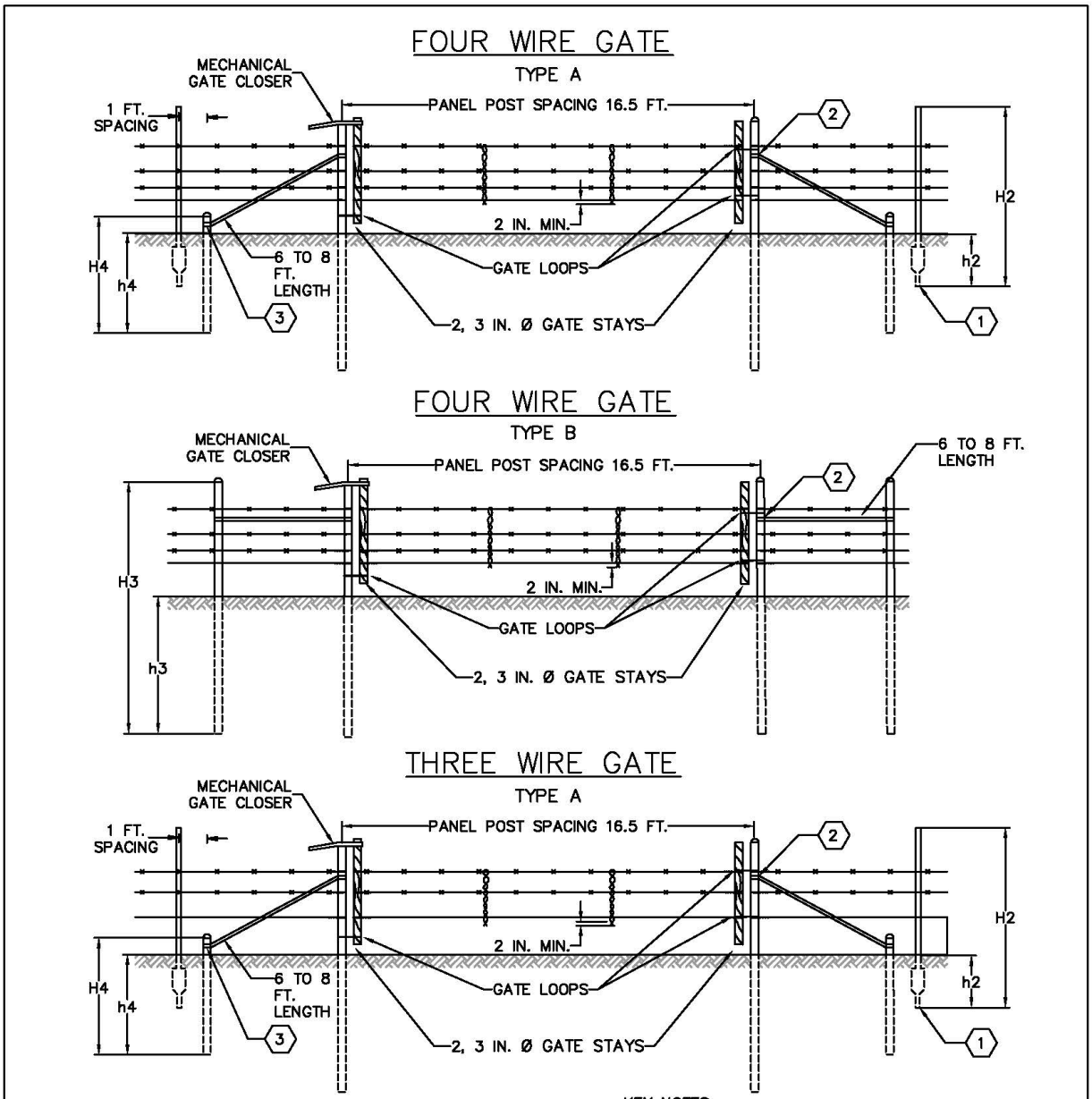

GENERAL NOTES:

1. CONSTRUCT END PANEL ON EACH SIDE OF GATE AS REQUIRED IN THE SPECIFICATIONS.
2. DRILL STEM MECHANICAL GATE CLOSER CONSTRUCTION BASED ON DESIGN IN SPECIFICATIONS AND DRAWINGS
3. ALL STEEL BRACE POSTS WILL BE CAPPED BY THE GOVERNMENT
4. DRAWING IS NOT DRAWN TO SCALE

KEY NOTES:

(1) STEEL LINE POST SHALL BE 5-1/2 FT. CERTIFIED 1.33 LBS/FT MINIMUM AND COLORED TO MATCH SPECIFICATIONS

(2) BRACE RAIL BANDS ATTACH 4 TO 6 IN. BELOW TOP WIRE HEIGHT

(3) BRACE RAIL BAND ATTACH 3 IN. MAXIMUM ABOVE GROUND SURFACE

THINK SAFETY FIRST

AUTOCAD NAME:2021 STEEL DRAWINGS.DWG		MARK	REVISION	APPROVED
DESIGN OFFICE: EMDDO				
DESIGNED BY: BF	DATE: 02/13/2020			
DRAWN BY: BF	DATE: 02/13/2020			
CHECKED BY: GS	DATE: 02/26/2020			
APPROVED BY: GS	DATE: 02/26/2020			

UNITED STATES DEPARTMENT OF THE INTERIOR
BUREAU OF LAND MANAGEMENT
WIRE GATES (STEEL)
MILES CITY FIELD OFFICE MONTANA

SHEET__ OF__

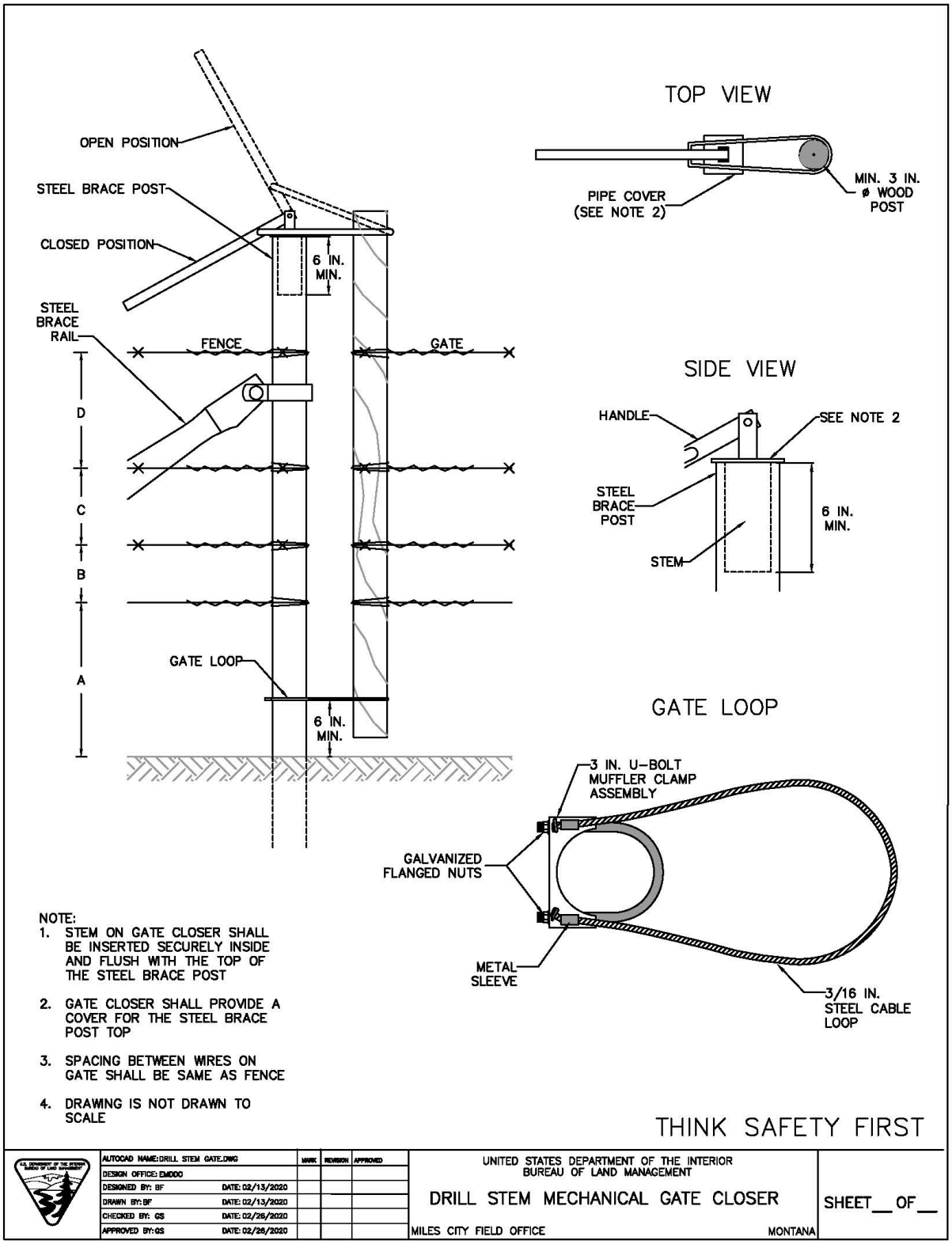
OPEN POSITION
STEEL BRACE POST
CLOSED POSITION
6 IN. MIN.
STEEL BRACE RAIL
FENCE
GATE
D
C
B
A
GATE LOOP
6 IN. MIN.
TOP VIEW
PIPE COVER (SEE NOTE 2)
MIN. 3 IN. ø WOOD POST
SIDE VIEW
HANDLE
SEE NOTE 2
STEEL BRACE POST
6 IN. MIN.
STEM
GATE LOOP
3 IN. U-BOLT MUFFLER CLAMP ASSEMBLY
GALVANIZED FLANGED NUTS
METAL SLEEVE
3/16 IN. STEEL CABLE LOOP
NOTE:
1. STEM ON GATE CLOSER SHALL BE INSERTED SECURELY INSIDE AND FLUSH WITH THE TOP OF THE STEEL BRACE POST
2. GATE CLOSER SHALL PROVIDE A COVER FOR THE STEEL BRACE POST TOP
3. SPACING BETWEEN WIRES ON GATE SHALL BE SAME AS FENCE
4. DRAWING IS NOT DRAWN TO SCALE
THINK SAFETY FIRST
AUTOCAD NAME: DRILL STEM GATE.DWG
DESIGN OFFICE: EMDDO
DESIGNED BY: BF DATE: 02/13/2020
DRAWN BY: BF DATE: 02/13/2020
CHECKED BY: GS DATE: 02/26/2020
APPROVED BY: GS DATE: 02/26/2020
MARK
REVISION
APPROVED
UNITED STATES DEPARTMENT OF THE INTERIOR
BUREAU OF LAND MANAGEMENT
DRILL STEM MECHANICAL GATE CLOSER
MILES CITY FIELD OFFICE
MONTANA
SHEET__ OF__

DEADMAN

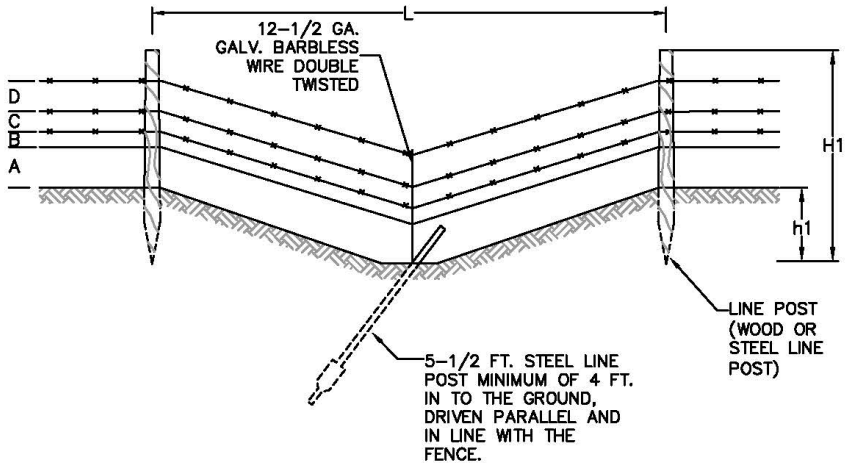

DEADMAN

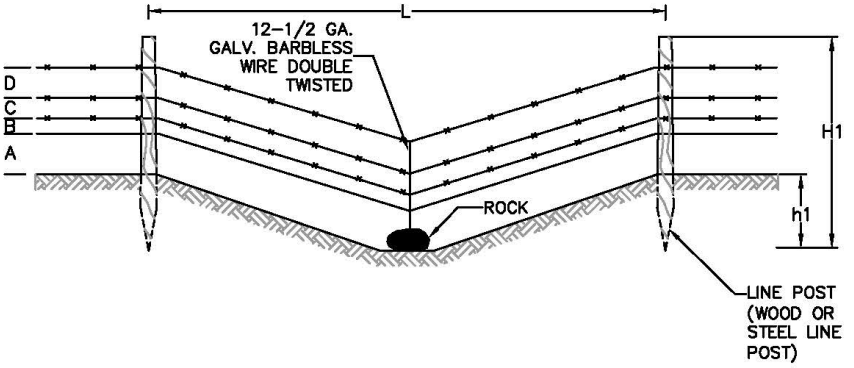

GENERAL NOTES:

1. FOR DEADMAN, USE DOUBLE TWISTED WIRE OF THE SAME MATERIAL AS BOTTOM WIRE OF FENCE AND A ROCK (MIN. WEIGHT 50 LBS.) OR STEEL LINE POST DEADMAN WHEN SPACE BETWEEN BOTTOM WIRE AND GROUND SURFACE EXCEED 20 INCHES.
2. SEE SPECIFICATIONS FOR THE FOLLOWING:
   I. POST SPACING, LENGTH & DEPTH IN GROUND
   II. SPACING BETWEEN WIRES
3. DRAWING IS NOT DRAWN TO SCALE.

THINK SAFETY FIRST

AUTOCAD NAME: 2021 STEEL DRAWINGS.DWG		MARK	REVISION	APPROVED
DESIGN OFFICE: EMDDO				
DESIGNED BY: BF	DATE: 02/13/2020			
DRAWN BY: BF	DATE: 02/13/2020			
CHECKED BY: GS	DATE: 02/26/2020			
APPROVED BY: GS	DATE: 02/26/2020			

UNITED STATES DEPARTMENT OF THE INTERIOR
BUREAU OF LAND MANAGEMENT

DEADMAN AT MINOR DEPRESSION

MILES CITY FIELD OFFICE — MONTANA

SHEET__ OF__

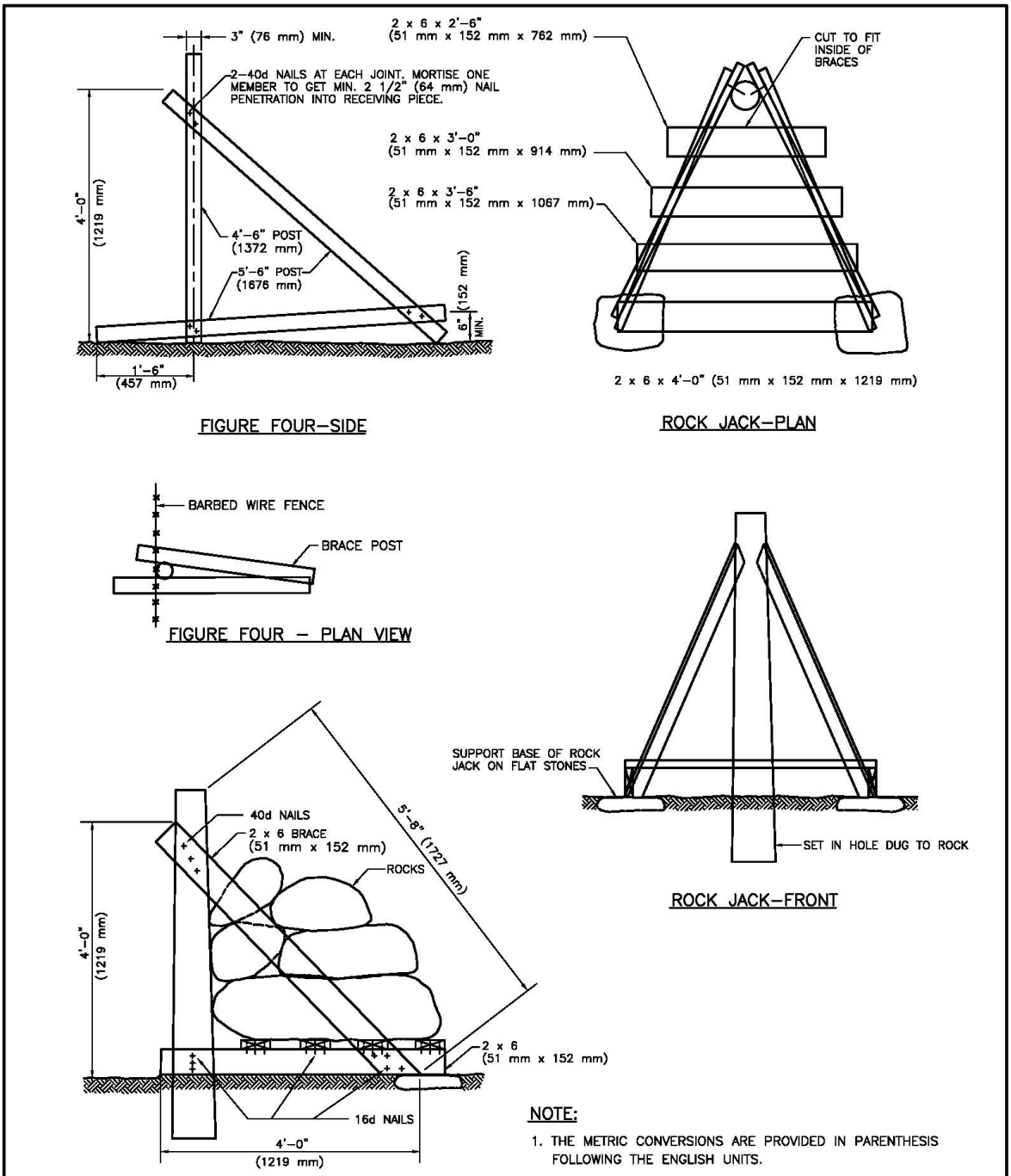
3" (76 mm) MIN.
2 x 6 x 2'-6" (51 mm x 152 mm x 762 mm)
CUT TO FIT INSIDE OF BRACES
2-40d NAILS AT EACH JOINT. MORTISE ONE MEMBER TO GET MIN. 2 1/2" (64 mm) NAIL PENETRATION INTO RECEIVING PIECE.
2 x 6 x 3'-0" (51 mm x 152 mm x 914 mm)
2 x 6 x 3'-6" (51 mm x 152 mm x 1067 mm)
4'-0" (1219 mm)
4'-6" POST (1372 mm)
5'-6" POST (1676 mm)
6" (152 mm) MIN.
1'-6" (457 mm)
2 x 6 x 4'-0" (51 mm x 152 mm x 1219 mm)
FIGURE FOUR-SIDE
ROCK JACK-PLAN
BARBED WIRE FENCE
BRACE POST
FIGURE FOUR - PLAN VIEW
SUPPORT BASE OF ROCK JACK ON FLAT STONES
SET IN HOLE DUG TO ROCK
ROCK JACK-FRONT
40d NAILS
2 x 6 BRACE (51 mm x 152 mm)
ROCKS
5'-8" (1727 mm)
4'-0" (1219 mm)
2 x 6 (51 mm x 152 mm)
16d NAILS
4'-0" (1219 mm)
ROCK JACK-SIDE (ROCKS IN PLACE)
NOTE:
1. THE METRIC CONVERSIONS ARE PROVIDED IN PARENTHESIS FOLLOWING THE ENGLISH UNITS.
N:\PROJECTS\STANDARD DRAWINGS\STDDWGS2009\02824-5.DWG
DESIGNED BY OTHERS
REVIEWED
APPROVED
DRAWN BY:
SCALE: NONE
DATE: APRIL 26, 1997
SHEET: 1 OF 1
STANDARD DETAIL DRAWING NO. 02824-5
ALWAYS THINK SAFETY
1 METRIC CONVERSION ADDED 9/30/97 LJP
2 FORMAT UPDATE 7/31/09 RTH
REV. NO. DESCRIPTION DATE APPROVED
UNITED STATES DEPARTMENT OF THE INTERIOR
BUREAU OF LAND MANAGEMENT
FIGURE FOUR AND ROCK JACK