OVERHAUL ELEVATOR BUILDING 4224

MARINE CORPS AIR STATION CHERRY POINT
STATION WON: 7320479

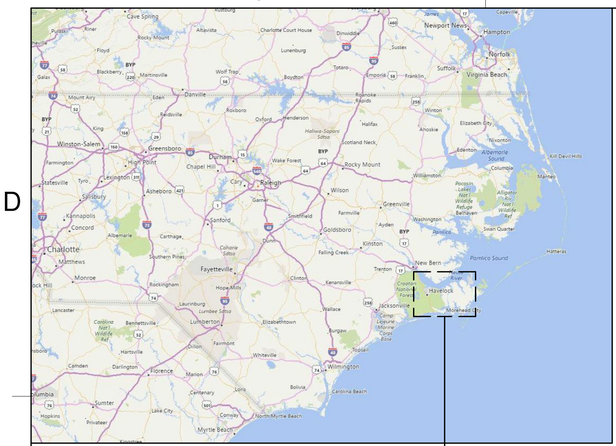

D1 REGIONAL MAP
SCALE: NOT TO SCALE

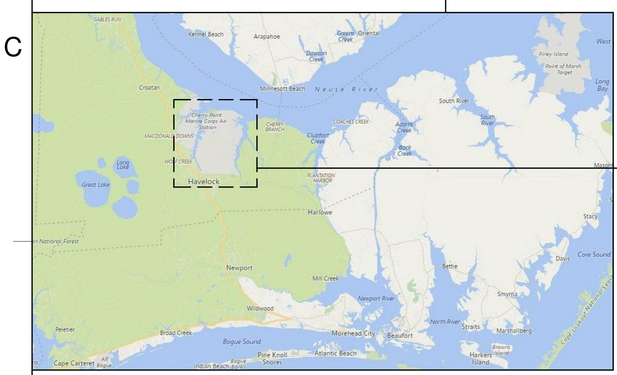

B1 VICINITY MAP
SCALE: NOT TO SCALE

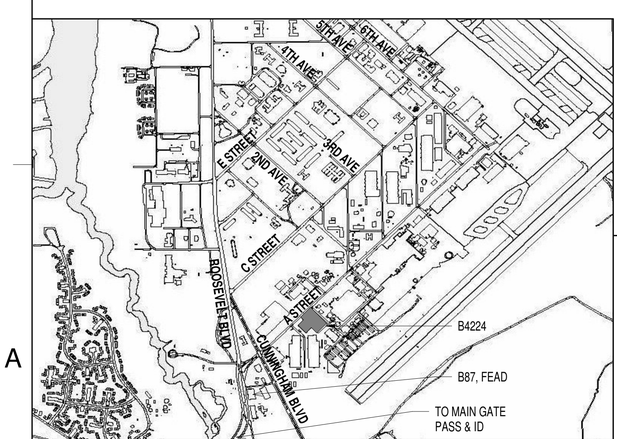

A1 BUILDING LOCATION MAP
SCALE: 1" = 1/4 STATUTE MILE

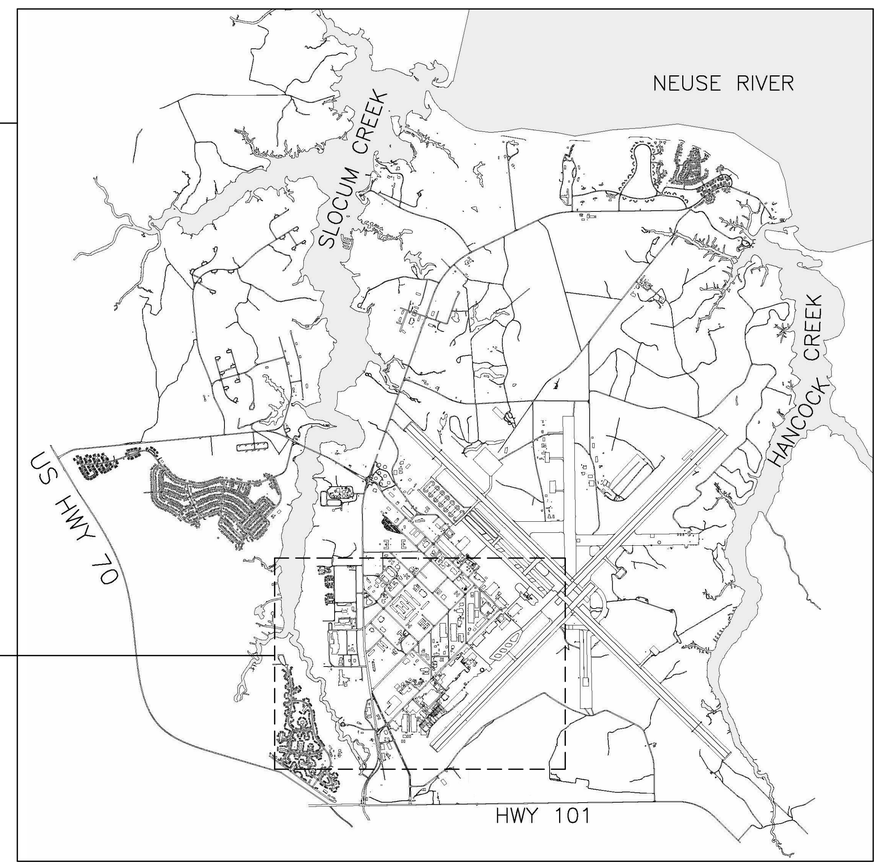

A3 MCAS CHERRY POINT INSTALLATION MAP
SCALE: 1" = 1/2 STATUTE MILE

INDEX OF DRAWINGS

SHEET NO		NAVFAC NO	PLATE NO	SHEET TITLE
			G	GENERAL
1	OF 31	12908226	G-001	TITLE SHEET AND INDEX OF DRAWINGS
			GI	LIFE SAFETY
2	OF 31	12908227	GI001	LIFE SAFETY GENERAL NOTES AND LEGEND
3	OF 31	12908228	GI101	LIFE SAFETY ELEVATOR FLOOR PLAN
			A	ARCHITECTURAL
4	OF 31	12908229	A-001	SYMBOL LEGEND AND ABBREVIATIONS
5	OF 31	12908230	AD101	FLOOR PLANS - EXISITING / DEMOLITION
6	OF 31	12908231	AD301	SECTIONS - EXISTING / DEMOLITION
7	OF 31	12908232	A-101	FLOOR PLANS - CONSTRUCTION
8	OF 31	12908233	A-301	SECTIONS - CONSTRUCTION
9	OF 31	12908234	A-501	DETAILS
10	OF 31	12908235	A-601	DOOR AND FRAME SCHEDULE
			F	FIRE PROTECTION
11	OF 31	12908236	FP001	FIRE PROTECTION GENERAL NOTES AND LEGEND
12	OF 31	12908237	FP101	FIRE PROTECTION OVERALL FIRST FLOOR PLAN
13	OF 31	12908238	FP102	FIRE PROTECTION ELEVATOR NEW WORK FLOOR PLAN
14	OF 31	12908239	FP501	FIRE PROTECTION DETAILS
			P	PLUMBING
15	OF 31	12908240	P-001	PLUMBING LEGENDS AND NOTES
16	OF 31	12908241	PD101	FLOOR PLAN - PLUMBING DEMOLITION
17	OF 31	12908242	P-101	FLOOR PLAN - PLUMBING
18	OF 31	12908243	P-501	PLUMBING - DETAILS
			M	MECHANICAL
19	OF 31	12908244	M-001	MECHANICAL NOTES, LEGEND & ABBREVIATIONS
20	OF 31	12908245	MD101	FLOOR PLAN - MECHANICAL DEMOLITION
21	OF 31	12908246	M-101	FLOOR PLAN - MECHANICAL
22	OF 31	12908247	M-501	MECHANICAL DETAILS
23	OF 31	12908248	M-601	MECHANICAL SCHEDULES
24	OF 31	12908249	M-701	MECHANICAL CONTROLS
			E	ELECTRICAL
25	OF 31	12908250	E-001	ELECTRICAL NOTES & LEGEND
26	OF 31	12908251	ED101	FLOOR PLAN - ELECTRICAL DEMOLITION
27	OF 31	12908252	E-101	FLOOR PLAN - POWER
28	OF 31	12908253	E-102	FLOOR PLAN - LIGHTING
29	OF 31	12908254	E-501	ELECTRICAL DETAILS
30	OF 31	12908255	E-601	ELECTRICAL SCHEDULES
31	OF 31	12908256	E-602	ELECTRICAL SCHEDULES

GRAPHIC SCALE: 1"=1/4 STATUTE MILE
1/2 MI 0 1/4 MI 1/2 MI 3/4 MI 1 MI

GRAPHIC SCALE: 1"=1/2 STATUTE MILE
1 MI 0 1/2 MI 1 MI 1 1/2 MI 2 MI

MBF ARCHITECTS P.A. CERT. NO. 50679 NEW BERN NC

PREFNIAL DESIGN SUBMITTAL

DRAWFORM REVISION: 25 AUGUST 2020

SYM	DESCRIPTION	DATE	APPR

NAVFAC

DARDEN J. EURE, III REGISTERED ARCHITECT 8640 NORTH CAROLINA NEW BERN NC
01 JUNE 2024 SEAL

mbf architects pa
317-C Pollock Street | New Bern, NC 28560
252.637.6373 | mbfarchitects.com
A/E INFO

APPROVED
Patrick Faulkner
FOR COMMANDER NAVFAC
ACTIVITY 7/8/2024

SATISFACTORY TO
DES REL DRW REL CHK DJE,III
PM/DM H. PERRY
BRANCH MANAGER P. FAULKNER
CHIEF ENG/ARCH
FIRE PROTECTION

DEPARTMENT OF THE NAVY
NAVAL FACILITIES ENGINEERING SYSTEMS COMMAND
DESIGN AND CONSTRUCTION (DC) CORE
NAVAL FACILITIES ENGINEERING SYSTEMS COMMAND - MIDATLANTIC
NAVAL STATION - NORFOLK, VA
MARINE CORPS AIR STATION CHERRY POINT, NC
OVERHAUL ELEVATOR - BUILDING 4224
TITLE SHEET

SCALE: AS INDICATED
EPROJECT NO.:
STA. PROJ. NO.: 7320479
NAVFAC DRAWING NO. 12908226
SHEET 1 OF 31
G-001

S:\projects\2023\2325 CP Overhaul Elevator B4224\2325 Design\2325 Dwgs\2325 ARCH 2023.rvt
File
6/14/2024 11:18:18 AM
Print

APPLICABLE BUILDING CODES

1.	IBC	INTERNATIONAL BUILDING CODE 2021
2.	UFC 1-200-01	GENERAL BUILDING REQUIREMENTS, 1 SEPTEMBER 2022
3.	UFC 3-600-01	DESIGN: FIRE PROTECTION ENGINEERING FOR FACILITIES, 6 MAY 2021
4.	NFPA 13	INSTALLATION OF SPRINKLER SYSTEMS 2022
5.	NFPA 70	NATIONAL ELECTRICAL CODE 2023
6.	NFPA 72	NATIONAL FIRE ALARM AND SIGNALING CODE 2022
7.	NFPA 101	LIFE SAFETY CODE (LSC) 2024

*STANDARD PROVIDED FOR DESIGN REFERENCE ONLY

USE GROUP/OCCUPANCY

BUSINESS GROUP B (IBC 304.1, LSC 6.1.11.1) - ORDINARY HAZARD (LSC 38.1.5 & 6.2.2.3)
STORAGE GROUP S-1 (IBC 311) / STORAGE (LSC 6.1.13) - ORDINARY HAZARD (LSC 42.1.5 & 6.2.2.3)

PER IBC, THE BUILDING IS CLASSIFIED AS NON-SEPARATED GROUP B AND GROUP S-1 OCCUPANCIES.

PER LSC, THE BUILDING IS CLASSIFIED AS MIXED USE BUSINESS AND STORAGE OCCUPANCIES.

FIRE PROTECTION SYSTEMS

WET PIPE SPRINKLER SYSTEM
FIRE ALARM SYSTEM

BUILDING CONSTRUCTION TYPE ANALYSIS

THE SCOPE OF WORK FOR THIS PROJECT CAN BE CLASSIFIED AS A MODIFICATION TO THE FACILITY IN ACCORDANCE WITH UFC 3-600-01 SECTION 34-1.2.1 AND NFPA 101 PARAGRAPH 43.2.2.1.3. SINCE THE SCOPE OF WORK DOES NOT CHANGE ANY OF THE FLOOR PLAN, THE SCOPE OF WORK IS NOT CLASSIFIED AS A RECONSTRUCTION [UFC 3-600-01 34-1.2.8]. SINCE THE SCOPE OF WORK IS CLASSIFIED AS A MODIFICATION, ALL WORK MUST CONFORM TO UFC 3-600-01 AND NFPA 101 FOR NEW CONSTRUCTION [UFC 3-600-01 34-1.2.7] AND THE EXISTING FLOOR PLAN THAT IS NOT AFFECTED BY THE SCOPE OF WORK MUST CONFORM TO NFPA 101 FOR EXISTING OCCUPANCIES [UFC 3-600-01 34-1.1]; THEREFORE THE BUILDING AREA AND HEIGHT ARE NOT BEING ANALYZED AS PART OF THIS PROJECT

INTERIOR FIRE RESISTANCE REQUIREMENTS

ROOM	REQUIRED SEPARATION
ELEVATOR HOISTWAY	1-HOUR (IBC 713.4 & 3002.1)
ELEVATOR EQUIPMENT ROOM	1-HOUR (IBC 3005.4)

LIFE SAFETY LEGEND

△ WALL-MOUNTED FIRE EXTINGUISHER

1-HR FIRE BARRIER

JENSEN HUGHES

FINAL SUBMITTAL

SYM	DESCRIPTION	DATE	APPR

NAVFAC

COMMONWEALTH OF VIRGINIA
AARON P FREID
Lic. No. 044409
01 JUN 2024
PROFESSIONAL ENGINEER
SEAL

mbf architects pa
317-C Pollock Street | New Bern, NC 28560
252.637.6373 | mbfarchitects.com
A/E INFO

APPROVED

FOR COMMANDER NAVFAC

ACTIVITY

SATISFACTORY TO

DES KEC | DRW KEC | CHK APF
PM/DM H. PERRY
BRANCH MANAGER P. FAULKNER
CHIEF ENG/ARCH
FIRE PROTECTION

DEPARTMENT OF THE NAVY
NAVAL FACILITIES ENGINEERING SYSTEMS COMMAND
NAVAL FACILITIES ENGINEERING SYSTEMS COMMAND ~ MIDATLANTIC
DESIGN AND CONSTRUCTION (DC) CORE
NAVAL STATION - NORFOLK, VA
MARINE CORPS AIR STATION CHERRY POINT, NC

OVERHAUL ELEVATOR - BUILDING 4224

LIFE SAFETY GENERAL NOTES AND LEGEND

SCALE: AS INDICATED
EPROJECT NO.:
STA. PROJ. NO.: 7320479
NAVFAC DRAWING NO. 12908227
SHEET 2 OF 31

GI001

DRAWFORM REVISION: 25 AUGUST 2020

File C:\Users\afreid\OneDrive - Jensen Hughes\Documents\2325 FIRE 2023_afreid.rvt
Print 6/12/2024 1:48:26 PM

KEY NOTES

1. REPAIR SPRAY-APPLIED FIRE RESISTIVE MATERIAL ON STRUCTURE AND METAL DECK.
2. FIRESTOP ELEVATOR EQUIPMENT PIPING PENETRATIONS INTO ELEVATOR SHAFT.
3. FIRESTOP VERTICAL ELECTRICAL CONDUIT PENETRATIONS.
4. REPAIR CRACKED INFILL AROUND STRUCTURE AND DUCTWORK.
5. REPAIR WALL AND CEILING JOINT FIRESTOPPING.

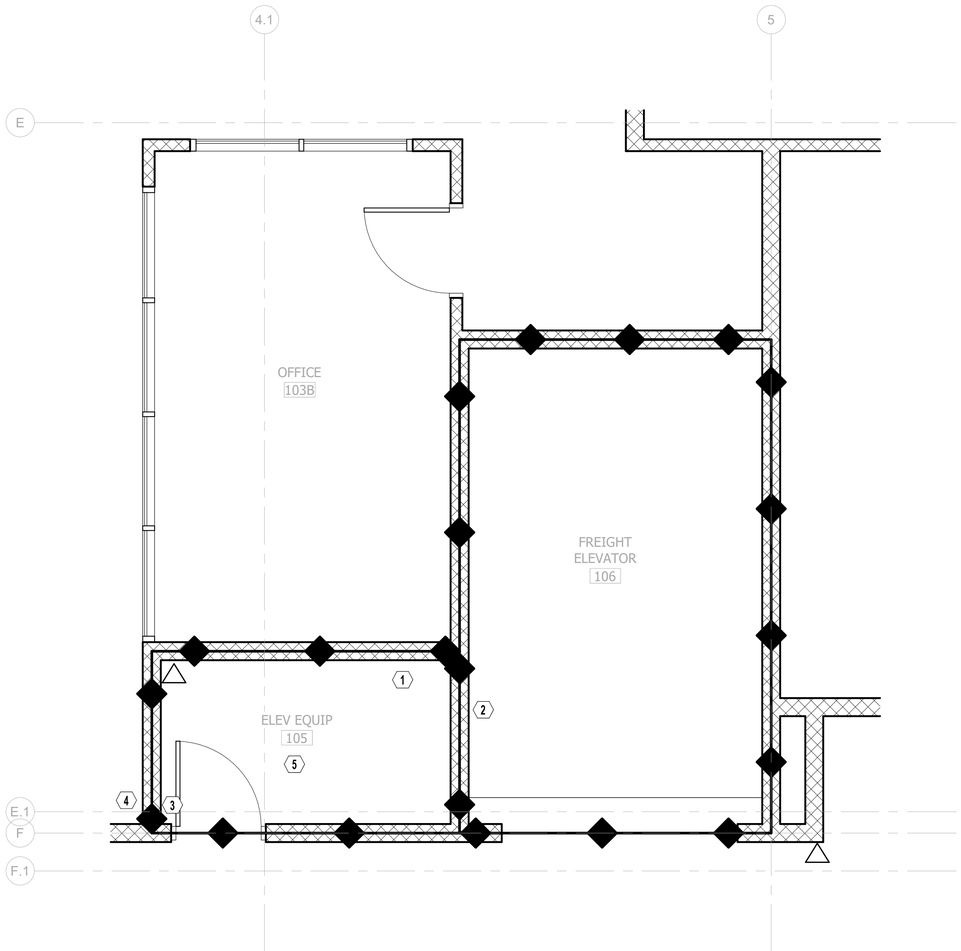

A1 LIFE SAFETY FIRST FLOOR PLAN

SCALE: 3/8" = 1'-0"

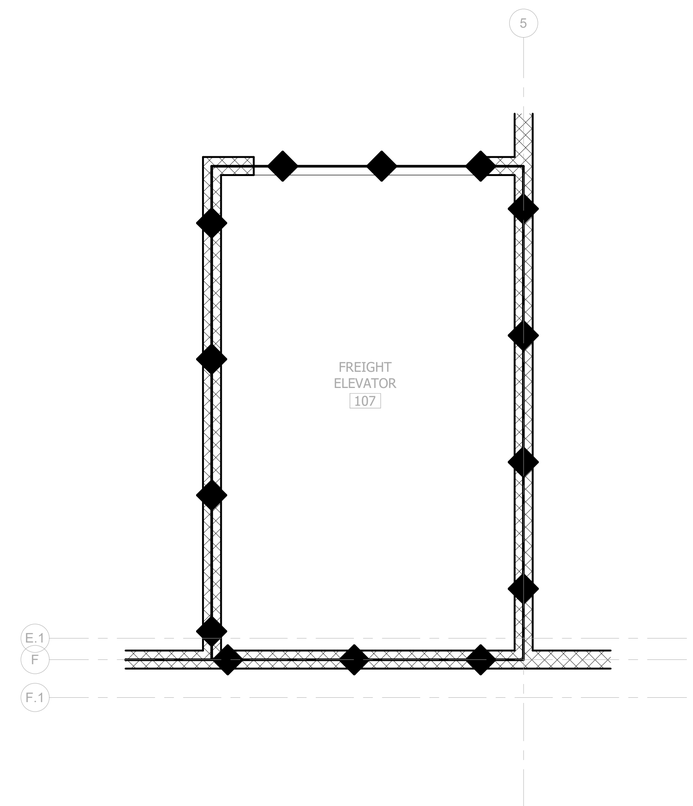

A4 LIFE SAFETY SECOND FLOOR PLAN

SCALE: 3/8" = 1'-0"

GRAPHIC SCALE:

3/8" =1'-0" 0' 2' 4' 6'

JENSEN HUGHES

SYM	DESCRIPTION	DATE	APPR

NAVFAC

COMMONWEALTH OF VIRGINIA
AARON P FREID
Lic. No. 044409
01 JUN 2024
PROFESSIONAL ENGINEER
SEAL

mbf architects pa
317-C Pollock Street | New Bern, NC 28560
252.637.6373 | mbfarchitects.com
A/E INFO

APPROVED

FOR COMMANDER NAVFAC

ACTIVITY

SATISFACTORY TO

DES KEC DRW KEC CHK APF

PM/DM H. PERRY

BRANCH MANAGER P. FAULKNER

CHIEF ENG/ARCH

FIRE PROTECTION

DEPARTMENT OF THE NAVY
NAVAL FACILITIES ENGINEERING SYSTEMS COMMAND
NAVAL FACILITIES ENGINEERING SYSTEMS COMMAND ~ MIDATLANTIC
DESIGN AND CONSTRUCTION (DC) CORE
NAVAL STATION - NORFOLK, VA
MARINE CORPS AIR STATION CHERRY POINT, NC

OVERHAUL ELEVATOR - BUILDING 4224

LIFE SAFETY ELEVATOR FLOOR PLAN

SCALE: AS INDICATED

EPROJECT NO.:

STA. PROJ. NO.: 7320479

NAVFAC DRAWING NO. 12908228

SHEET 3 OF 31

GI101

FINAL SUBMITTAL

DRAWFORM REVISION: 25 AUGUST 2020

File C:\Users\afreid\OneDrive - Jensen Hughes\Documents\2325 FIRE 2023_afreid.rvt
Print 6/12/2024 1:48:27 PM

SYMBOL LEGEND

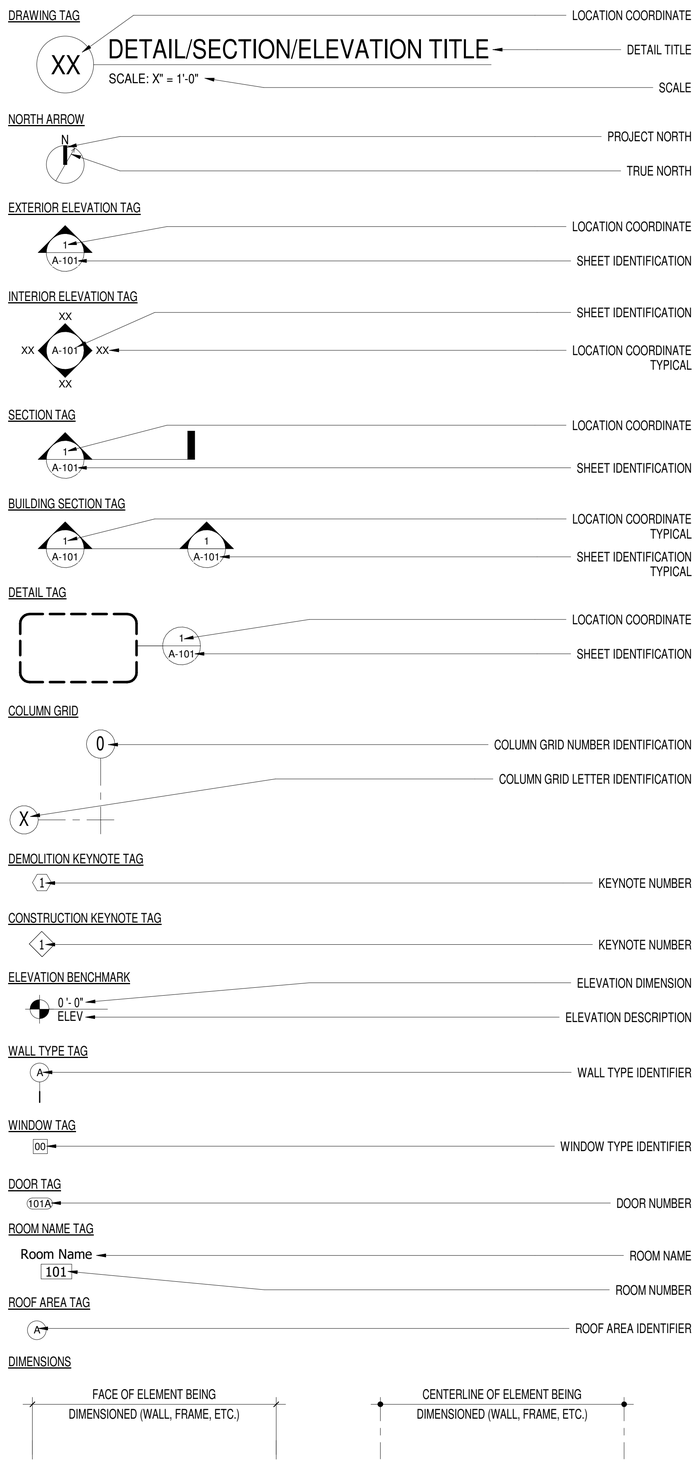

ABBREVIATIONS

ACAIR	CONDITIONING
AB	ANCHOR BOLT
ADA	AMERICANS WITH DISABILITIES ACT
ABA	ARCHITECTURAL BARRIERS ACT
AFF	ABOVE FINISH FLOOR
AHJ	AUTHORITY HAVING JURISDICTION
AHU	AIR HANDLING UNIT
ALUM	ALUMINUM
ALT	ALTERNATE
ATC	ACOUSTICAL TILE CEILING
AUX	AUXILIARY
BD	BOARD
BLDG	BUILDING
BL	BUILDING LINE
BRG	BEARING
CFM	CUBIC FEET PER MINUTE
CI	CURB INLET / CAST IRON
CJ	CONTROL JOINT
CL	CENTER LINE
CLG	CEILING
CLR	CLEAR
CM	CENTIMETER
COL	COLUMN
CONC	CONCRETE
CPT	CARPET
CY	CUBIC YARD
DF	DRINKING FOUNTAIN
DIA	DIAMETER
DIAG	DIAGONAL
DL	DEAD LOAD
DN	DOWN
DS	DOWNSPOUT
DWG	DRAWING
EA	EACH / EXHAUST AIR
EJ	EXPANSION JOINT
EJ/CJ	EXPANSION JOINT & CONTROL JOINT
ELEV	ELEVATION, ELEVATOR
ELEC	ELECTRIC(AL)
EQ	EQUAL
EQUP	EQUIPMENT
EW	EACH WAY
EX	EXHAUST
EXTG	EXISTING
EXT	EXTERIOR
FA	FIRE ALARM
FACP	FIRE ALARM CONTROL PANEL
FAAP	FIRE ALARM ANNUNCIATOR PANEL
FCU	FAN COIL UNIT
FD	FLOOR DRAIN
FE	FIRE EXTINGUISHER
FEC	FIRE EXTINGUISHER CABINET
FFE	FINISHED FLOOR ELEVATION
FG	FINISHED GRADE
FIN	FINISH
FIXT	FIXTURE
FLR	FLOOR
FHB	FREEZE-PROOF HOSE BIBB
FT	FEET
GA	GAGE
GALV	GALVANIZED
GPM	GALLONS PER MINUTE
GWB	GYPSUM WALLBOARD
GYP	GYPSUM
HB	HOSE BIBB
HM	HOLLOW METAL
ID	INSIDE DIAMETER
IN	INCH
INSUL	INSULATION
INT	INTERIOR
JT	JOINT
LAV	LAVATORY
LF	LINEAR FEET
LL	LIVE LOAD
LVT	LUXURY VINYL TILE
MAX	MAXIMUM
MECH	MECHANICAL
MFR	MANUFACTURER
MIN	MINIMUM
MO	MASONRY OPENING
NEC	NATIONAL ELECTRICAL CODE
NIC	NOT IN CONTRACT
NO	NUMBER
NTS	NOT TO SCALE
OC	ON CENTER
OPG	OPENING
PWD	PLYWOOD
PR	PAIR
PSF	POUNDS PER SQUARE FOOT
PSI	POUNDS PER SQUARE INCH
QT	QUARRY TILE
RB	RESILIENT BASE
RD	ROOF DRAIN
REQ	REQUIRED
REV READ	REVERSE READ
RM	ROOM
RO	ROUGH OPENING
ROW	RIGHT OF WAY
SD	SMOKE DETECTOR
SECT	BUILDING SECTION
SHT	SHEET
SIM	SIMILAR
SQ	SQUARE
SS	STAINLESS STEEL
STD	STANDARD
T&B	TOP AND BOTTOM
T&G	TONGUE AND GROOVE
TLT	TOILET
TOS	TOP OF STEEL
TYP	TYPICAL
UH	UNIT HEATER
UNO	UNLESS NOTED OTHERWISE
VAV	VARIABLE AIR VOLUME
VCT	VINYL COMPOSITION TILE
W/	WITH
WD	WOOD
WH	WATER HEATER

MBF ARCHITECTS P.A. REGISTERED ARCHITECTURAL CORPORATION CERT. NO. 50679 NORTH CAROLINA NEW BERN N.C.

PREFNIAL DESIGN SUBMITTAL

SYM	DESCRIPTION	DATE	APPR

NAVFAC

DARDEN J. EURE III REGISTERED ARCHITECT 8840 NORTH CAROLINA NEW BERN NC

01 JUNE 2024 SEAL

mbf architects pa
317-C Pollock Street | New Bern, NC 28560
252.637.6373 | mbfarchitects.com
A/E INFO

APPROVED

FOR COMMANDER NAVFAC
ACTIVITY

SATISFACTORY TO

DES	REL	DRW	REL	CHK	DJE,III
PM/DM	H. PERRY				
BRANCH MANAGER	P. FAULKNER				
CHIEF ENG/ARCH					
FIRE PROTECTION					

DEPARTMENT OF THE NAVY
NAVAL FACILITIES ENGINEERING SYSTEMS COMMAND
DESIGN AND CONSTRUCTION (DC) CORE
NAVAL FACILITIES ENGINEERING SYSTEMS COMMAND ~ MIDATLANTIC
NAVAL STATION - NORFOLK, VA
MARINE CORPS AIR STATION
CHERRY POINT, NC

OVERHAUL ELEVATOR - BUILDING 4224

SYMBOL LEGEND AND ABBREVIATIONS

SCALE: AS INDICATED
EPROJECT NO.:
STA. PROJ. NO.: 7320479
NAVFAC DRAWING NO. 12908229
SHEET 4 OF 31

A-001

DRAWFORM REVISION: 25 AUGUST 2020

S:\projects\2023\2325 CP Overhaul Elevator B4224\2325 Design\2325 Dwgs\2325 ARCH 2023.rvt
File 6/14/2024 12:16:00 PM
Print

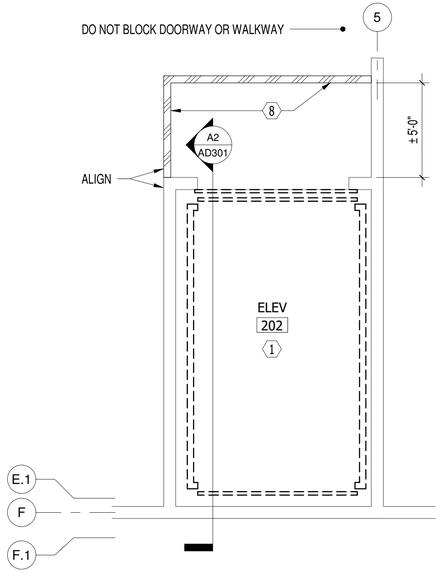

C1 SECOND FLOOR HOISTWAY PLAN - EXISTING / DEMOLITION

SCALE: 1/4" = 1'-0"

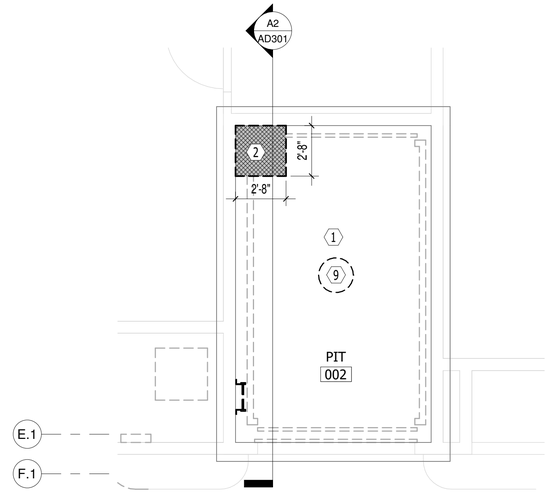

C3 PIT FLOOR PLAN - EXISTING / DEMOLITION

SCALE: 1/4" = 1'-0"

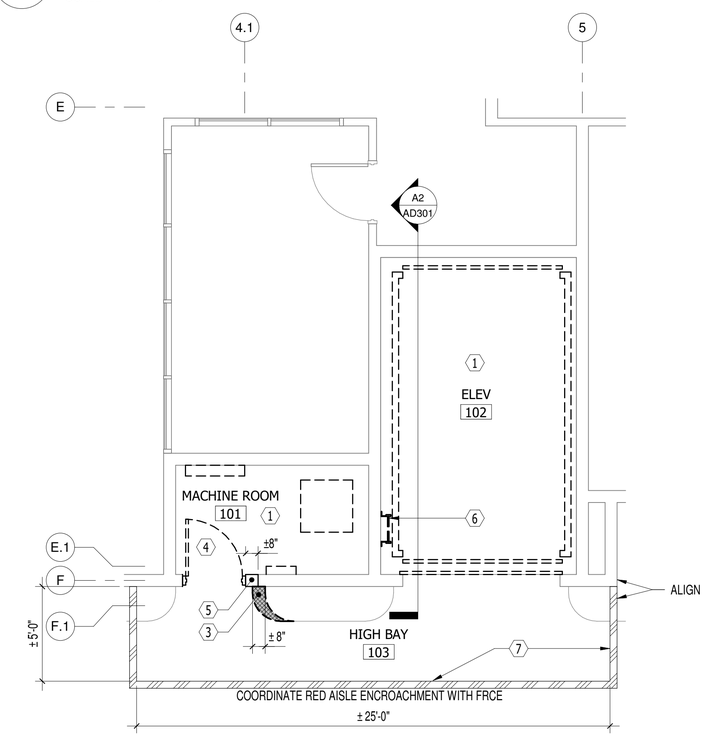

A1 FIRST FLOOR HOISTWAY PLAN - EXISTING / DEMOLITION

SCALE: 1/4" = 1'-0"

GENERAL DEMOLITION NOTES

1. REFERENCE SHEET A-001 FOR SYMBOL LEGEND
2. WHERE EXISTING LOAD BEARING ELEMENTS ARE TO BE REMOVED CONTRACTOR MUST PROVIDE TEMPORARY SHORING AND BRACING OF EXISTING STRUCTURE UNTIL NEW LOAD BEARING ELEMENT IS IN PLACE
3. EXISTING FURNITURE AND EQUIPMENT WITHIN WORK AREAS WILL BE REMOVED BY THE GOVERNMENT
4. REFERENCE THE LIFE SAFETY DRAWINGS FOR LOCATIONS OF RATED WALLS AND SMOKE PARTITIONS

DEMOLITION LEGEND

- EXISTING WALLS, DOORS, FRAMES, MILLWORK AND EQUIPMENT TO REMAIN
- WALLS, DOORS, FRAMES, MILLWORK AND EQUIPMENT TO BE REMOVED
- LIMITS OF FLOOR SLAB DEMOLITION

DEMOLITION KEYNOTES

1. REMOVE ELEVATOR IN ENTIRETY INCLUDING BUT NOT LIMITED TO CAR, MACHINE EQUIPMENT, HYDRAULIC JACK, CONTROLLERS, RAILS, GUIDES, SUPPORTS AND GUIDE INSERTS, HOISTWAY DOORS, SILLS, HALL STATIONS, ETC.
2. REMOVE STEEL PLATE SUMP COVER AND SAW CUT AND REMOVE THE EXISTING CONCRETE SUMP AND A PORTION OF THE EXISTING PIT FLOOR SLAB TO ACCOMMODATE THE NEW SUMP. SEE DETAIL A1 / A-501
3. SAW CUT AND REMOVE A PORTION OF THE EXISTING CONCRETE CURB TO ACCOMMODATE THE NEW WIDER DOOR
4. DEMOLISH EXISTING STEEL DOOR AND FRAME INCLUDING HARDWARE
5. SAW CUT AND REMOVE A PORTION OF THE EXISTING CMU WALL TO ACCOMMODATE THE WIDER REPLACEMENT DOOR AND FRAME
6. DEMOLISH PIT LADDER
7. PROVIDE TEMPORARY CONSTRUCTION WALL AT FIRST FLOOR. EXTEND TEMPORARY TO ±10'-0" AFF AND PROVIDE A SLOPED CAP. MAINTAIN TEMPORARY WALL AND CAP FOR THE DURATION OF NOISE AND DUST GENERATING CONSTRUCTION ACTIVITIES. SEE DETAIL A3 / A-501 PROVIDE WALK-OFF MATS AT BOTH SIDES OF DOORS
8. PROVIDE TEMPORARY CONSTRUCTION WALL AT SECOND FLOOR. EXTEND TEMPORARY TO UNDERSIDE OF ACOUSTICAL TILE CEILING SYSTEM AND PROVIDE A FOAM RUBBER SEAL. MAINTAIN TEMPORARY WALL FOR THE DURATION OF NOISE AND DUST GENERATING CONSTRUCTION ACTIVITIES. SEE DETAIL A3 / A-501 . PROVIDE WALK-OFF MATS AT BOTH SIDES OF DOORS
9. REMOVE THE EXISTING HYDRAULIC JACK ASSEMBLY AND CASING ENTIRELY. REFERENCE THE SPECIFICATIONS FOR REQUIREMENTS RELATED TO POTENTIALLY CONTAMINATED SOILS

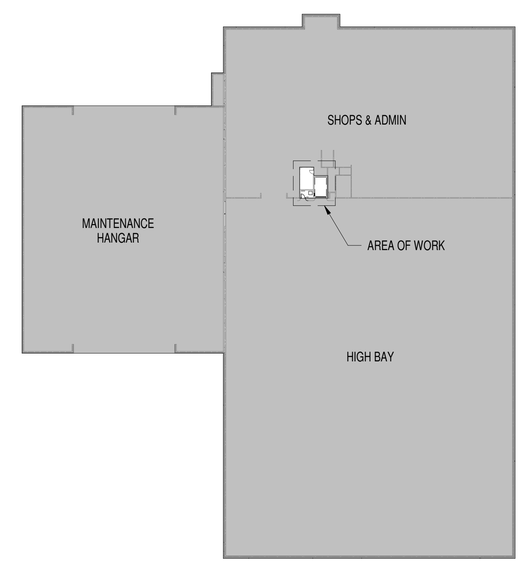

A5 KEY PLAN

SCALE: 1" = 60'-0"

GRAPHIC SCALE: 1"=60'
60' 0 60' 120'

GRAPHIC SCALE: 1/4"=1'-0"
4' 0 2' 4' 8'

SYM	DESCRIPTION	DATE	APPR

NAVFAC

DARDEN J. EURE, III REGISTERED ARCHITECT 8440 NORTH CAROLINA NEW BERN, NC

01 JUNE 2024 SEAL

mbf architects pa
317-C Pollock Street | New Bern, NC 28560
252.637.6373 | mbfarchitects.com
A/E INFO

APPROVED

FOR COMMANDER NAVFAC
ACTIVITY

SATISFACTORY TO

DES	REL	DRW	REL	CHK	DJE,III

PM/DM H. PERRY
BRANCH MANAGER P. FAULKNER
CHIEF ENG/ARCH
FIRE PROTECTION

NAVAL FACILITIES ENGINEERING SYSTEMS COMMAND
NAVAL FACILITIES ENGINEERING SYSTEMS COMMAND ~ MIDATLANTIC
NAVAL STATION - NORFOLK, VA
CHERRY POINT, NC
DEPARTMENT OF THE NAVY
DESIGN AND CONSTRUCTION (DC) CORE
MARINE CORPS AIR STATION

OVERHAUL ELEVATOR - BUILDING 4224

FLOOR PLANS - EXISTING / DEMOLITION

MBF ARCHITECTS P.A. REGISTERED ARCHITECTURAL CORPORATION CERT. NO. 50679 NORTH CAROLINA NEW BERN, N.C.

SCALE: AS INDICATED
EPROJECT NO.:
STA. PROJ. NO.: 7320479
NAVFAC DRAWING NO. 12908230
SHEET 5 OF 31
AD101

PREFINAL DESIGN SUBMITTAL

DRAWFORM REVISION: 25 AUGUST 2020

S:\projects\2023\2325 CP Overhaul Elevator B4224\2325 Design\2325 Dwgs\2325 ARCH 2023.rvt
6/14/2024 12:16:00 PM
File
Print

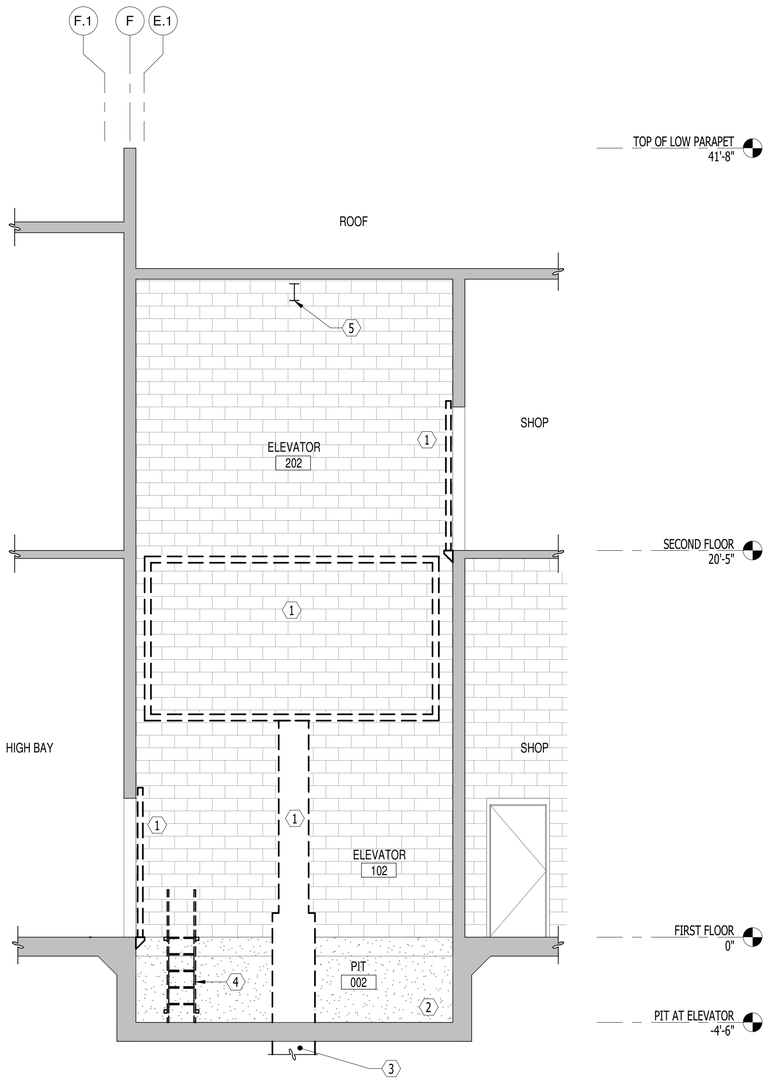

A2 HOISTWAY SECTION - EXISTING / DEMOLITION

SCALE: 1/4" = 1'-0"

GENERAL DEMOLITION NOTES

1. REFERENCE SHEET A-001 FOR SYMBOL LEGEND
2. WHERE EXISTING LOAD BEARING ELEMENTS ARE TO BE REMOVED CONTRACTOR MUST PROVIDE TEMPORARY SHORING AND BRACING OF EXISTING STRUCTURE UNTIL NEW LOAD BEARING ELEMENT IS IN PLACE
3. EXISTING FURNITURE AND EQUIPMENT WITHIN WORK AREAS WILL BE REMOVED BY THE GOVERNMENT
4. REFERENCE THE LIFE SAFETY DRAWINGS FOR LOCATIONS OF RATED WALLS AND SMOKE PARTITIONS

DEMOLITION LEGEND

EXISTING WALLS, DOORS, FRAMES, MILLWORK AND EQUIPMENT TO REMAIN

WALLS, DOORS, FRAMES, MILLWORK AND EQUIPMENT TO BE REMOVED

LIMITS OF FLOOR SLAB DEMOLITION

DEMOLITION KEYNOTES

1. REMOVE ELEVATOR IN ENTIRETY INCLUDING BUT NOT LIMITED TO CAR, MACHINE EQUIPMENT, HYDRAULIC JACK, CONTROLLERS, RAILS, GUIDES, SUPPORTS AND GUIDE INSERTS, HOISTWAY DOORS, SILLS, HALL STATIONS, ETC.
2. SAW CUT AND REMOVE A PORTION OF THE EXISTING PIT FLOOR SLAB TO ACCOMMODATE THE NEW SUMP. SEE DETAIL A1 / A-501
3. REMOVE THE EXISTING HYDRAULIC JACK ASSEMBLY AND CASING ENTIRELY. REFERENCE THE SPECIFICATIONS FOR REQUIREMENTS RELATED TO POTENTIALLY CONTAMINATED SOILS
4. REMOVE PIT LADDER
5. EXISTING HOIST BEAM TO REMAIN.

GRAPHIC SCALE: 1/4"=1'-0"

4' 0 2' 4' 8'

SYM	DESCRIPTION	DATE	APPR

NAVFAC

DARDEN J. EURE III REGISTERED ARCHITECT 8440 NORTH CAROLINA NEW BERN NC

01 JUNE 2024 SEAL

mbf architects pa

317-C Pollock Street | New Bern, NC 28560
252.637.6373 | mbfarchitects.com

A/E INFO

APPROVED

FOR COMMANDER NAVFAC

ACTIVITY

SATISFACTORY TO

DES REL DRW REL CHK DJE,III

PM/DM H. PERRY

BRANCH MANAGER P. FAULKNER

CHIEF ENG/ARCH

FIRE PROTECTION

DEPARTMENT OF THE NAVY
NAVAL FACILITIES ENGINEERING SYSTEMS COMMAND
DESIGN AND CONSTRUCTION (DC) CORE
NAVAL FACILITIES ENGINEERING SYSTEMS COMMAND ~ MIDATLANTIC
NAVAL STATION - NORFOLK, VA.
MARINE CORPS AIR STATION
CHERRY POINT, NC

OVERHAUL ELEVATOR - BUILDING 4224

SECTIONS - EXISTING / DEMOLITION

SCALE: AS INDICATED

EPROJECT NO.:

STA. PROJ. NO.: 7320479

NAVFAC DRAWING NO. 12908231

SHEET 6 OF 31

AD301

MBF ARCHITECTS P.A. REGISTERED ARCHITECTURAL CORPORATION CERT. NO. 50679 NORTH CAROLINA NEW BERN, N.C.

PREFNIAL DESIGN SUBMITTAL

DRAWFORM REVISION: 25 AUGUST 2020

S:\projects\2023\2325 CP Overhaul Elevator B4224\2325 Design\2325 Dwgs\2325 ARCH 2023.rvt
6/14/2024 12:16:00 PM

File
Print

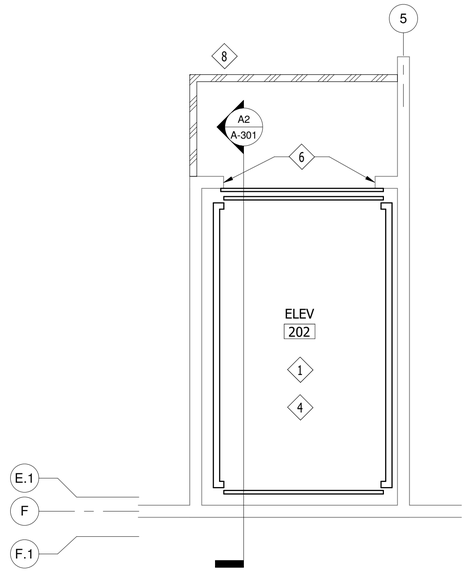

C1 SECOND FLOOR HOISTWAY PLAN - CONSTRUCTION

SCALE: 1/4" = 1'-0"

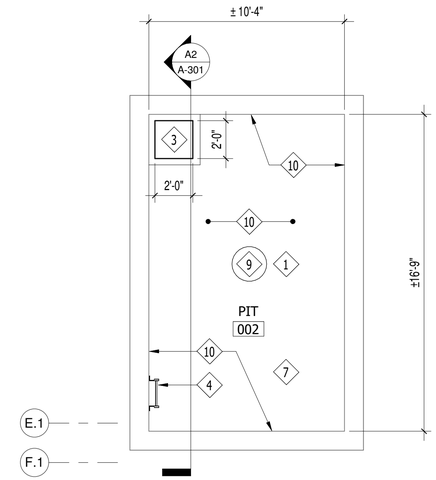

C3 PIT FLOOR PLAN - CONSTRUCTION

SCALE: 1/4" = 1'-0"

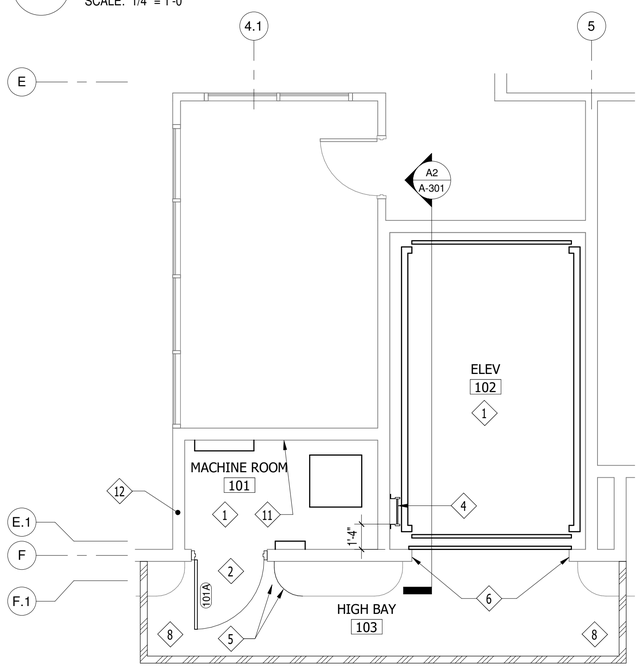

A1 FIRST FLOOR HOISTWAY PLAN - CONSTRUCTION

SCALE: 1/4" = 1'-0"

GENERAL CONSTRUCTION NOTES

1. REFERENCE SHEET A-001 FOR SYMBOL LEGEND
2. REFERENCE SHEET A-501 FOR WALL TYPES
3. REFERENCE SHEET A-601 FOR DOOR AND FRAME SCHEDULE
4. REFERENCE THE LIFE SAFETY DRAWINGS FOR LOCATIONS OF RATED WALLS AND SMOKE PARTITIONS

CONSTRUCTION KEYNOTES

1. PROVIDE NEW COMPLETE ELEVATOR INCLUDING BUT NOT LIMITED TO CAR, MACHINE EQUIPMENT, HYDRAULIC JACK, CONTROLLERS, RAILS, GUIDES, GUIDE INSERTS AND SUPPORTS, HOISTWAY DOORS, SILLS, HALL STATIONS, ETC. PROVIDE SHOP DRAWING OF THE MACHINE ROOM LAYOUT FOR NEW EQUIPMENT THAT INDICATES CLEARANCES. MACHINE ROOM CANNOT BE ENLARGED
2. SHORE OPENING AND PROVIDE NEW 8" CMU LINTEL TO ACHIEVE 8" MINIMUM BEARING AT EACH JAMB. SEE DETAIL C5 / A-501. PROVIDE STEEL DOOR AND FRAME INCLUDING BUT NOT LIMITED TO HARDWARE, ETC. REFERENCE THE DOOR AND FRAME SCHEDULE ON SHEET A-601
3. CONCRETE SUMP. SEE DETAIL A1 / A-501
4. PROVIDE NEW STEEL PIT LADDER. SEE DETAIL A5 / A-501
5. RESTORE CONCRETE CURB RADIUS. RESTORE CONCRETE SURFACE FINISH AT FLOOR SLAB AND CURB SURFACES. PREPARE AND PAINT CURB SAFETY YELLOW TO MATCH ADJACENT
6. CLEAN, PREPARE AND PAINT STEEL HOISTWAY DOOR FRAMES
7. CLEAN PIT AT THE COMPLETION OF WORK
8. MAINTAIN TEMPORARY WALLS AND WALK-OFF MATS AT BOTH SIDES OF DOORS FOR THE DURATION OF NOISE AND DUST GENERATING CONSTRUCTION ACTIVITIES. RESTORE EXISTING FINISHES FOLLOWING REMOVAL OF THE TEMPORARY WALLS
9. PROVIDE HYDRAULIC JACK ASSEMBLY AND PVC CASING. REFERENCE THE SPECIFICATIONS FOR REQUIREMENTS RELATED TO POTENTIALLY CONTAMINATED SOILS
10. PROVIDE CRYSTALLINE WATERPROOFING AT THE INTERIOR SIDE (NEGATIVE SIDE) OF THE PIT WALLS AND FLOOR. WATERPROOFING TO EXTEND TO THE FINISHED FLOOR LINE. THOROUGHLY CLEAN SURFACES TO RECEIVE CRYSTALLINE WATERPROOFING
11. PROVIDE A FIRE EXTINGUISHER HOOK MOUNTED TO THE WALL. COORDINATE WITH FRCE SAFETY FOR FIRE EXTINGUISHER MODEL TO BE ACCOMMODATED
12. RESTORE CMU WALL AND RATING ONCE MECHANICAL DUCT IS REMOVED

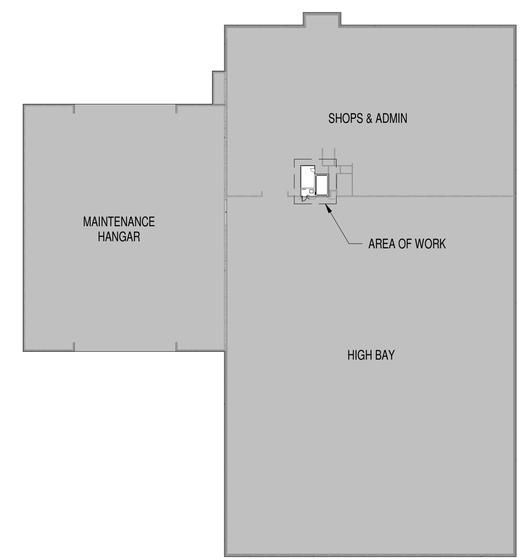

A5 KEY PLAN

SCALE: 1" = 60'-0"

GRAPHIC SCALE: 1"=60'
60' 0 60' 120'

GRAPHIC SCALE: 1/4"=1'-0"
4' 0 2' 4' 8'

SYM	DESCRIPTION	DATE	APPR

NAVFAC

DARDEN J. EURE, III REGISTERED ARCHITECT 8640 NORTH CAROLINA NEW BERN NC

01 JUNE 2024 SEAL

mbf architects pa
317-C Pollock Street | New Bern, NC 28560
252.637.6373 | mbfarchitects.com
A/E INFO

APPROVED

FOR COMMANDER NAVFAC
ACTIVITY

SATISFACTORY TO

DES	REL	DRW	REL	CHK	DJE,III
PM/DM	H. PERRY				
BRANCH MANAGER	P. FAULKNER				
CHIEF ENG/ARCH					
FIRE PROTECTION					

DEPARTMENT OF THE NAVY
NAVAL FACILITIES ENGINEERING SYSTEMS COMMAND
DESIGN AND CONSTRUCTION (DC) CORE
NAVAL FACILITIES ENGINEERING SYSTEMS COMMAND ~ MIDATLANTIC
NAVAL STATION - NORFOLK, VA.
MARINE CORPS AIR STATION CHERRY POINT, NC

OVERHAUL ELEVATOR - BUILDING 4224

FLOOR PLANS - CONSTRUCTION

SCALE:	AS INDICATED
EPROJECT NO.:	
STA. PROJ. NO.:	7320479
NAVFAC DRAWING NO.	12908232
SHEET	7 OF 31

A-101

MBF ARCHITECTS P.A. REGISTERED ARCHITECTURAL CORPORATION CERT. NO. 50679 NORTH CAROLINA NEW BERN N.C.

PREFINAL DESIGN SUBMITTAL

DRAWFORM REVISION: 25 AUGUST 2020

File S:\projects\2023\2325 CP Overhaul Elevator B4224\2325 Design\2325 Dwgs\2325 ARCH 2023.rvt
Print 6/14/2024 12:16:01 PM

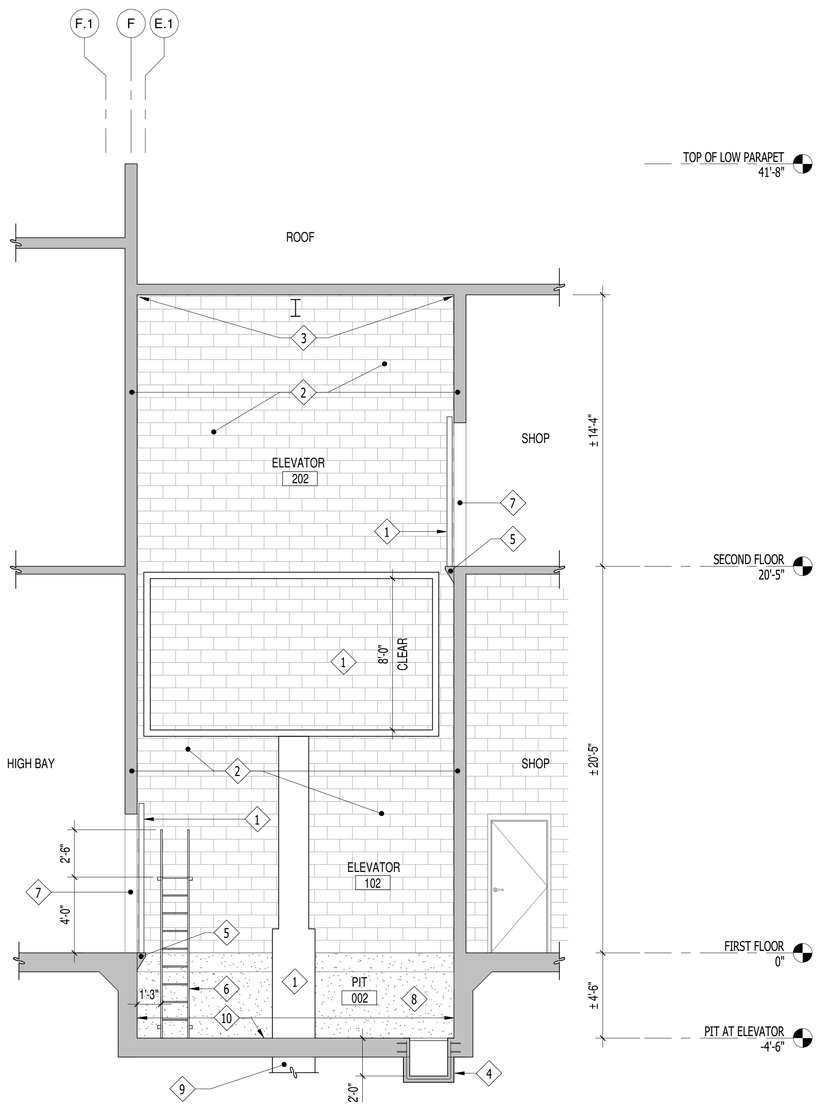

A2 HOISTWAY SECTION - CONSTRUCTION

SCALE: 1/4" = 1'-0"

GENERAL CONSTRUCTION NOTES

1. REFERENCE SHEET A-001 FOR SYMBOL LEGEND
2. REFERENCE SHEET A-501 FOR WALL TYPES
3. REFERENCE SHEET A-601 FOR DOOR AND FRAME SCHEDULE
4. REFERENCE THE LIFE SAFETY DRAWINGS FOR LOCATIONS OF RATED WALLS AND SMOKE PARTITIONS

CONSTRUCTION KEYNOTES

1. PROVIDE NEW COMPLETE ELEVATOR INCLUDING BUT NOT LIMITED TO CAR, MACHINE EQUIPMENT, HYDRAULIC JACK, CONTROLLERS, RAILS, GUIDES, GUIDE INSERTS AND SUPPORTS, HOISTWAY DOORS, SILLS, HALL STATIONS, ETC.
2. PATCH DAMAGED AREAS OF THE HOISTWAY WALLS TO RESTORE 1 HOUR RATING. SEE DETAIL C2 / A-501 . INCLUDES PATCHING WHERE GUIDE INSERTS ARE REMOVED
3. CONFIRM SEAL AT TOP OF THE HOISTWAY. REPAIR TO RESTORE 1 HOUR RATED ASSEMBLY. SEAL ANY GAPS OR VOIDS WITH NON-SHRINK GROUT
4. CONCRETE SUMP. SEE DETAIL A1 / A-501
5. PROVIDE REPLACEMENT SILL AND SHEET METAL COVER. SEE DETAIL C1 / A-501
6. PROVIDE PIT LADDER. SEE DETAIL A5 / A-501
7. CLEAN, PREPARE AND PAINT STEEL HOISTWAY DOOR FRAMES
8. CLEAN PIT AT THE COMPLETION OF WORK
9. PROVIDE HYDRAULIC JACK ASSEMBLY AND PVC CASING. REFERENCE THE SPECIFICATIONS FOR REQUIREMENTS RELATED TO POTENTIALLY CONTAMINATED SOILS
10. PROVIDE CRYSTALLINE WATERPROOFING AT THE INTERIOR SIDE (NEGATIVE SIDE) OF THE PIT WALLS AND FLOOR. WATERPROOFING TO EXTEND TO THE FINISHED FLOOR LINE. THOROUGHLY CLEAN SURFACES TO RECEIVE CRYSTALLINE WATERPROOFING

GRAPHIC SCALE: 1/4"=1'-0"

4' 0 2' 4' 8'

MBF ARCHITECTS, P.A. REGISTERED ARCHITECTURAL CORPORATION CERT. NO. 50679 NORTH CAROLINA NEW BERN, N.C.

PREFNIAL DESIGN SUBMITTAL

SYM	DESCRIPTION	DATE	APPR

NAVFAC

DARDEN J. EURE, III REGISTERED ARCHITECT 8440 NORTH CAROLINA NEW BERN NC

01 JUNE 2024 SEAL

mbf architects pa
317-C Pollock Street | New Bern, NC 28560
252.637.6373 | mbfarchitects.com
A/E INFO

APPROVED

FOR COMMANDER NAVFAC

ACTIVITY

SATISFACTORY TO

DES	REL	DRW	REL	CHK	DJE,III
PM/DM	H. PERRY				
BRANCH MANAGER	P. FAULKNER				
CHIEF ENG/ARCH					
FIRE PROTECTION					

DEPARTMENT OF THE NAVY
NAVAL FACILITIES ENGINEERING SYSTEMS COMMAND
NAVAL FACILITIES ENGINEERING SYSTEMS COMMAND ~ MIDATLANTIC
DESIGN AND CONSTRUCTION (DC) CORE
NAVAL STATION - NORFOLK, VA
MARINE CORPS AIR STATION CHERRY POINT, NC

OVERHAUL ELEVATOR - BUILDING 4224

SECTIONS - CONSTRUCTION

SCALE: AS INDICATED

EPROJECT NO.:

STA. PROJ. NO.: 7320479

NAVFAC DRAWING NO. 12908233

SHEET 8 OF 31

A-301

DRAWFORM REVISION: 25 AUGUST 2020

S:\projects\2023\2325 CP Overhaul Elevator B4224\2325 Design\2325 Dwgs\2325 ARCH 2023.rvt
6/14/2024 12:16:01 PM

File
Print

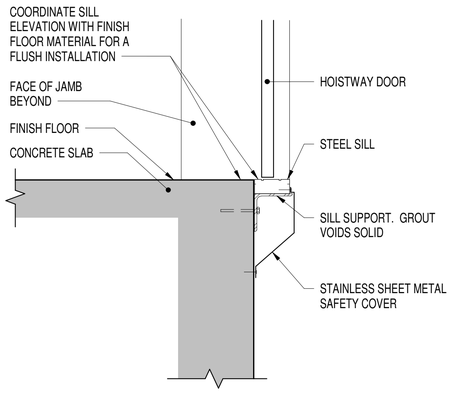

C1 ELEVATOR SILL DETAIL

SCALE: 1 1/2" = 1'-0"

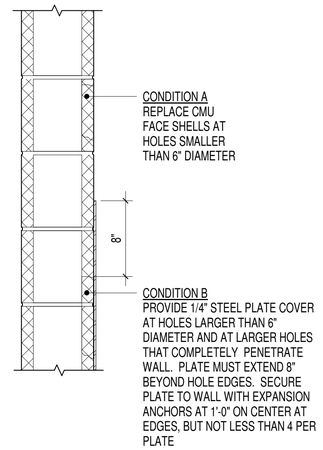

ASSUME THE FOLLOWING FOR BIDDING.
1. INCLUDE 10 SQUARE FEET OF CONDITION A
2. INCLUDE 10 SQUARE FEET OF CONDITION B

C2 CMU PATCH DETAIL

SCALE: 1 1/2" = 1'-0"

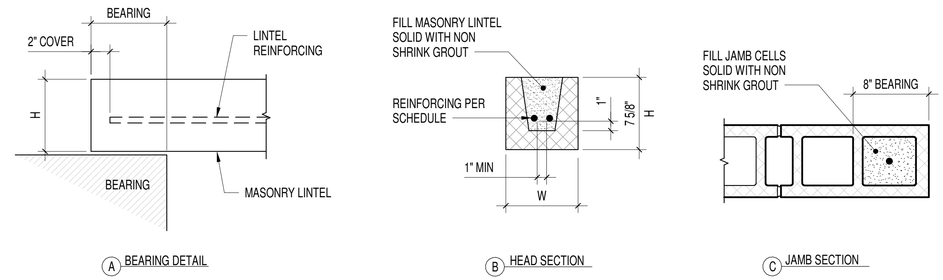

ROUGH OPENING WIDTH	BEARING AT EACH END	JAMB REINFORCING	LINTEL WIDTH W	HEIGHT H	LINTEL REINFORCING	REMARKS
0'-0" < OPENING < 4'-0"	8"	(1) NO. 5 BARS	MATCH WALL	8"	(2) NO. 5 BARS	

NOTES:
1. LAY LINTEL BLOCK HORIZONTALLY AND MAINTAIN THE MASONRY BOND
2. FILL JAMB CELLS AT EXISTING WALLS RECEIVING NEW OPENINGS
3.

C5 MASONRY LINTEL SCHEDULE

SCALE: 1 1/2" = 1'-0"

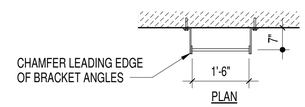

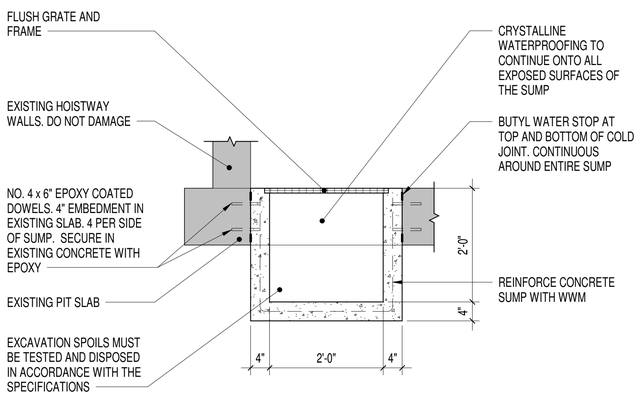

A1 CONCRETE SUMP DETAIL

SCALE: 3/4" = 1'-0"

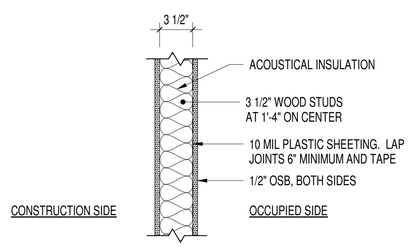

NOTES:
1. CONTINUE OSB, ACOUSTICAL INSULATION AND PLASTIC SHEETING AT SLOPED CAPS TO MAINTAIN SOUND AND DUST CONTROL
2. PROVIDE CONSTRUCTION ACCESS DOORS WITH GASKETING OR SEALS WHERE NECESSARY TO FACILITATE WORK. DOORS MUST BE SECURED WITH A PADLOCK WHEN NOT IN USE
3. PROVIDE CONTINUOUS FOAM RUBBER SEALS AT PERIMETER OF TEMPORARY WALL

A3 TEMPORARY WALL

SCALE: 1 1/2" = 1'-0"

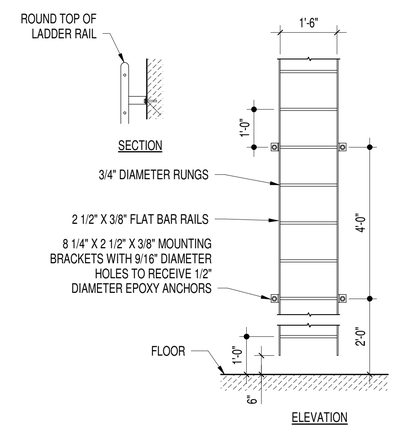

NOTES:
1. LADDER MUST CONFORM TO OSHA AND OTHER APPLICABLE REGULATORY REQUIREMENTS
2. LADDER FABRICATION IS HOT DIP GALVANIZED
3. REFERENCE HOISTWAY SECTION FOR LADDER HEIGHT REQUIREMENTS

A5 LADDER FABRICATION DETAIL

SCALE: 1/2" = 1'-0"

GRAPHIC SCALE: 1/2"=1'-0" (2' 0 1' 2' 4')

GRAPHIC SCALE: 3/4"=1'-0" (1' 0 1' 2' 3')

GRAPHIC SCALE: 1 1/2"=1'-0" (1' 6" 3" 0 1')

SYM	DESCRIPTION	DATE	APPR

NAVFAC

DARDEN J. EURE, III — REGISTERED ARCHITECT — 8840 — NORTH CAROLINA — NEW BERN, NC

01 JUNE 2024 SEAL

mbf architects pa
317-C Pollock Street | New Bern, NC 28560
252.637.8373 | mbfarchitects.com
A/E INFO

APPROVED

FOR COMMANDER NAVFAC
ACTIVITY

SATISFACTORY TO

DES	REL	DRW	REL	CHK	DJE,III
PM/DM	H. PERRY				
BRANCH MANAGER	P. FAULKNER				
CHIEF ENG/ARCH					
FIRE PROTECTION					

DEPARTMENT OF THE NAVY
NAVAL FACILITIES ENGINEERING SYSTEMS COMMAND
DESIGN AND CONSTRUCTION (DC) CORE
MARINE CORPS AIR STATION

NAVAL FACILITIES ENGINEERING SYSTEMS COMMAND - MIDLANTIC
NAVAL STATION - NORFOLK, VA.
CHERRY POINT, NC

OVERHAUL ELEVATOR - BUILDING 4224

DETAILS

SCALE: AS INDICATED
EPROJECT NO.:
STA. PROJ. NO.: 7320479
NAVFAC DRAWING NO. 12908234
SHEET 9 OF 31

A-501

MBF ARCHITECTS, P.A. — REGISTERED ARCHITECTURAL COMPANY — CERTIFICATE — CERT. NO. 50679 — NEW BERN, NC

PREFINAL DESIGN SUBMITTAL

DRAWFORM REVISION: 25 AUGUST 2020

S:\projects\2023\2325 CP Overhaul Elevator B4224\2325 Design\2325 Dwgs\2325 ARCH 2023.rvt
6/14/2024 12:16:01 PM
File
Print

DOOR AND FRAME SCHEDULE

MARK	DOOR						FRAME					FIRE RATING	REMARKS
	TYPE	WIDTH	HT.	THK.	MATERIAL	GLAZING	TYPE	MATERIAL	HEAD	JAMB	SILL		
101A	F	3'-8"	7'-0"	1 3/4"	STEEL		B	STEEL	A2A/A-601	A2B/A-601		45 MINUTES	INSULATED DOOR

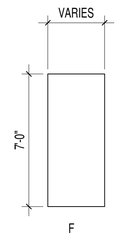

D4 DOOR DIMENSIONS
SCALE: 1/4" = 1'-0"

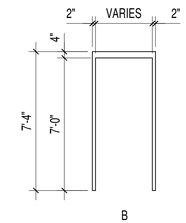

D5 STEEL FRAME DIMENSIONS
SCALE: 1/4" = 1'-0"

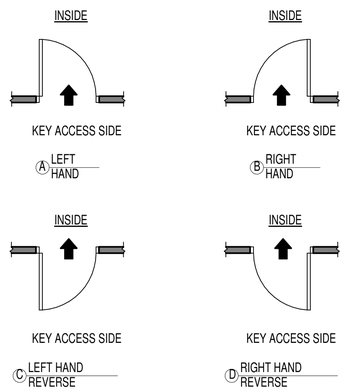

C2 DOOR SWING AND HANDING DETAIL
SCALE: 1/4" = 1'-0"

MARK	DESCRIPTION
A	4 1/2"x4 1/2" BUTT HINGE
B	NOT USED
C	NOT USED
D	TRIM, 2 3/4" BACKSET
E	KICK OR MOP PLATE, 2'-10"x8" OR 2'-10"x4"

A SCHEDULE

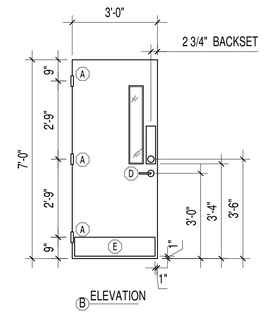

NOTES:
1. REFERENCE THE TECHNICAL SPECIFICATIONS FOR CLEARANCE DIMENSIONS AND DOOR BEVELING

C4 HARDWARE MOUNTING DIMENSIONS
SCALE: 3/8" = 1'-0"

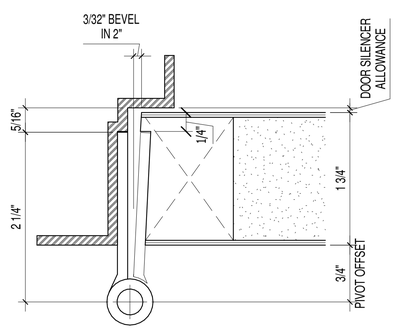

NOTES:
1. STEEL DOOR DETAILS ARE SIMILAR

A1 HINGE DETAIL - STEEL FRAME
SCALE: 12" = 1'-0"

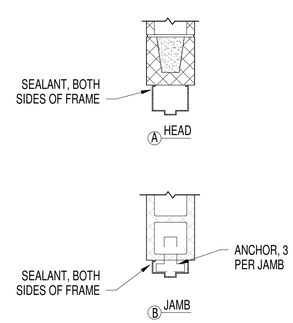

A3 INTERIOR STEEL FRAME DETAILS AT CMU
SCALE: 1" = 1'-0"

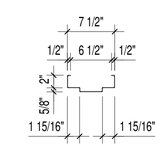

NOTES:
1. FRAME DIMENSIONS FOR INTERIOR 6" PARTITION WALLS AND INTERIOR CMU WALLS

INTERIOR

A5 STEEL FRAME DIMENSION
SCALE: 1" = 1'-0"

GRAPHIC SCALE: 1"=1'-0"
1' 0 1' 2'

GRAPHIC SCALE: 1"=1'-0"
1' 0 1' 2'

MBF ARCHITECTS P.A. REGISTERED ARCHITECTURAL CORPORATION CERT. NO. 50679 NORTH CAROLINA NEW BERN, NC.

PREFINAL DESIGN SUBMITTAL

SYM	DESCRIPTION	DATE	APPR

NAVFAC

DARDEN J. EURE, III REGISTERED ARCHITECT 8640 NORTH CAROLINA NEW BERN, NC
01 JUNE 2024 SEAL

mbf architects pa
317-C Pollock Street | New Bern, NC 28560
252.637.6373 | mbfarchitects.com
A/E INFO

APPROVED
FOR COMMANDER NAVFAC
ACTIVITY
SATISFACTORY TO
DES REL DRW REL CHK DJE,III
PM/DM H. PERRY
BRANCH MANAGER P. FAULKNER
CHIEF ENG/ARCH
FIRE PROTECTION

DEPARTMENT OF THE NAVY
NAVAL FACILITIES ENGINEERING SYSTEMS COMMAND
DESIGN AND CONSTRUCTION (DC) CORE
NAVAL FACILITIES ENGINEERING SYSTEMS COMMAND ~ MIDATLANTIC
NAVAL STATION - NORFOLK, VA
MARINE CORPS AIR STATION CHERRY POINT, NC

OVERHAUL ELEVATOR - BUILDING 4224

DOOR AND FRAME SCHEDULE

SCALE: AS INDICATED
EPROJECT NO.:
STA. PROJ. NO.: 7320479
NAVFAC DRAWING NO. 12908235
SHEET 10 OF 31
A-601
DRAWFORM REVISION: 25 AUGUST 2020

S:\projects\2023\2325 CP Overhaul Elevator B4224\2325 Design\2325 Dwgs\2325 ARCH 2023.rvt
File 6/14/2024 12:16:02 PM
Print

FIRE ALARM GENERAL NOTES:

1. GENERAL SCOPE - MODIFY THE EXISTING FIRE ALARM SYSTEM IN BUILDING 4224 TO COORDINATE WITH THE ELEVATOR OVERHAUL.
2. APPLICABLE CODES:

   NFPA 70 NATIONAL ELECTRICAL CODE (NEC), 2023
   NFPA 72 NATIONAL FIRE ALARM AND SIGNALING CODE, 2022

3. THE EXISTING FIRE ALARM SYSTEM MUST REMAIN OPERATIONAL THROUGHOUT CONSTRUCTION.
4. PROVIDED DEVICES MUST BE UL LISTED.
5. SIGNALING LINE AND INITIATING DEVICE CIRCUITS MUST MATCH EXISTING CLASS DESIGNATION.
6. PROVIDED CONDUIT AND BACK BOXES MUST BE CONCEALED UNLESS OTHERWISE NOTED.PROVIDED JUNCTION BOXES AND COVERS MUST BE PAINTED RED IN UNFINISHED AREAS. IN FINISHED AREAS, PROVIDED CONDUIT AND JUNCTION BOXES MUST BE PAINTED TO MATCH THE ROOM FINISH. FIRE ALARM CONDUITS IN FINISHED AREAS MUST BE MARKED WITH 3/4-IN RED BANDS EVERY 10-FT AND AT EACH SIDE OF A FLOOR, WALL, OR CEILING PENETRATION. PROVIDED JUNCTION BOXES MUST HAVE A PERMANENT, MACHINE PRINTED LABEL READING "FIRE ALARM CIRCUIT" ON THE INSIDE COVER.
7. WIRING, CABLES, BOXES, TROUGHS AND OTHER RELATED EQUIPMENT MUST BE INSTALLED IN STRICT COMPLIANCE WITH THE NATIONAL ELECTRICAL CODE (NEC).
8. DRAWINGS ARE CONCEPTUAL IN NATURE. THEY DO NOT SHOW THE EXACT LOCATIONS OF COMPONENTS OR ALL SYSTEM COMPONENTS. CONTRACTOR MUST PROVIDE ADDITIONAL COMPONENTS FOR A PROPERLY INSTALLED AND FUNCTIONAL SYSTEM IN ACCORDANCE WITH APPLICABLE CODES.
9. SMOKE SENSORS MUST BE TESTED IN ACCORDANCE WITH NFPA 72 AND MANUFACTURER'S RECOMMENDED CALIBRATED TEST METHOD.

FIRE SUPPRESSION GENERAL NOTES:

1. GENERAL SCOPE - MODIFY THE EXISTING SPRINKLER SYSTEM IN BUILDING 4224 TO CCODINATE WITH THE ELEVATOR OVERHAUL.
2. APPLICABLE CODES:

   NFPA 13 INSTALLATION OF SPRINKLER SYSTEMS, 2022

3. THE CONTRACTOR MUST HAVE A DESIGNER WITH A NICET LEVEL III CERTIFICATION IN WATER-BASED SYSTEMS LAYOUT OR A LICENSED PROFESSIONAL FIRE PROTECTION ENGINEER IN RESPONSIBLE CHARGE OF THE SYSTEM DESIGN.
4. SPRINKLER PIPE MUST BE U.L. LISTED BLACK STEEL AND MATCH EXISTING PIPE DIAMETER AND SCHEDULE..
5. SPRINKLERS MUST MATCH EXISTING MANUFACTURER, ORIENTATION, TYPE, FINISH, AND TEMPERATURE RATING.
6. HYDRAULIC CALCULATIONS ARE NOT REQUIRED PROVIDED THE EXISTING PIPE DIAMETERS ARE DUPLICATED.
7. THESE DRAWINGS DEMONSTRATE THE CONFIGURATION OF MAJOR SYSTEM COMPONENTS. THEY ARE DIAGRAMMATIC IN NATURE AND ARE NOT INTENDED TO SHOW EXACT LOCATIONS. PIPE LENGTHS AND ELEVATIONS INDICATED ON THE DRAWINGS (IF SHOWN) ARE APPROXIMATE. COORDINATE FINAL INSTALLATION WITH ACTUAL FIELD CONDITIONS AND OTHER CONSTRUCTION TRADES. DESIGN THE SPRINKLER SYSTEM TO PROVIDE COMPLETE PROTECTION THROUGHOUT IN ACCORDANCE WITH NFPA 13.

FIRE PROTECTION LEGEND:

FACP	EXISTING FIRE ALARM CONTROL PANEL
	ADDRESSABLE SMOKE DETECTOR (CEILING MOUNT)
	ADDRESSABLE SMOKE DETECTOR (WALL MOUNT)
LXDXX	EXISTING ADDRESSABLE SMOKE DETECTOR W/ ADDRESS
	TAMPER SWITCH
	WATERFLOW SWITCH
MM	MONITOR MODULE
CM	CONTROL MODULE
XX	OCCUPANCY HAZARD CLASSIFICATION
	EXISTING SPRINKLER RISER
EL	ELEVATOR RECALL

OCCUPANCY HAZARD SPACING LEGEND:

AREAS ARE LIGHT HAZARD UNLESS NOTED OTHERWISE. SPRINKLER LAYOUT MUST COMPLY WITH NFPA 13 LIGHT HAZARD SPACING CRITERIA.

OH	ORDINARY HAZARD. SPRINKLER LAYOUT MUST COMPLY WITH NFPA 13 ORDINARY HAZARD SPACING CRITERIA. MINIMUM 8.0 K-FACTOR SPRINKLERS.

JENSEN HUGHES

SYM	DESCRIPTION	DATE	APPR

NAVFAC

COMMONWEALTH OF VIRGINIA
AARON P FREID
Lic. No. 044409
01 JUN 2024
PROFESSIONAL ENGINEER
SEAL

mbf architects pa
317-C Pollock Street | New Bern, NC 28560
252.637.6373 | mbfarchitects.com
A/E INFO

APPROVED

FOR COMMANDER NAVFAC
ACTIVITY

SATISFACTORY TO

DES KEC | DRW KEC | CHK APF
PM/DM H. PERRY
BRANCH MANAGER P. FAULKNER
CHIEF ENG/ARCH
FIRE PROTECTION

DEPARTMENT OF THE NAVY
NAVAL FACILITIES ENGINEERING SYSTEMS COMMAND
DESIGN AND CONSTRUCTION (DC) CORE
NAVAL FACILITIES ENGINEERING SYSTEMS COMMAND ~ MIDATLANTIC
NAVAL STATION - NORFOLK VA
MARINE CORPS AIR STATION CHERRY POINT, NC

OVERHAUL ELEVATOR - BUILDING 4224

FIRE PROTECTION GENERAL NOTES AND LEGEND

SCALE: AS INDICATED
EPROJECT NO.:
STA. PROJ. NO.: 7320479
NAVFAC DRAWING NO. 12908236
SHEET 11 OF 31

FP001

FINAL SUBMITTAL DRAWFORM REVISION: 25 AUGUST 2020

File C:\Users\afreid\OneDrive - Jensen Hughes\Documents\2325 FIRE 2023_afreid.rvt
Print 6/12/2024 1:48:27 PM

KEY NOTES

1. EXISTING JOHNSON CONTROLS FIRE ALARM CONTROL PANEL.
2. EXISTING FIRE ALARM MODULE 16' AFF.
3. EXISTING SPRINKLER RISER

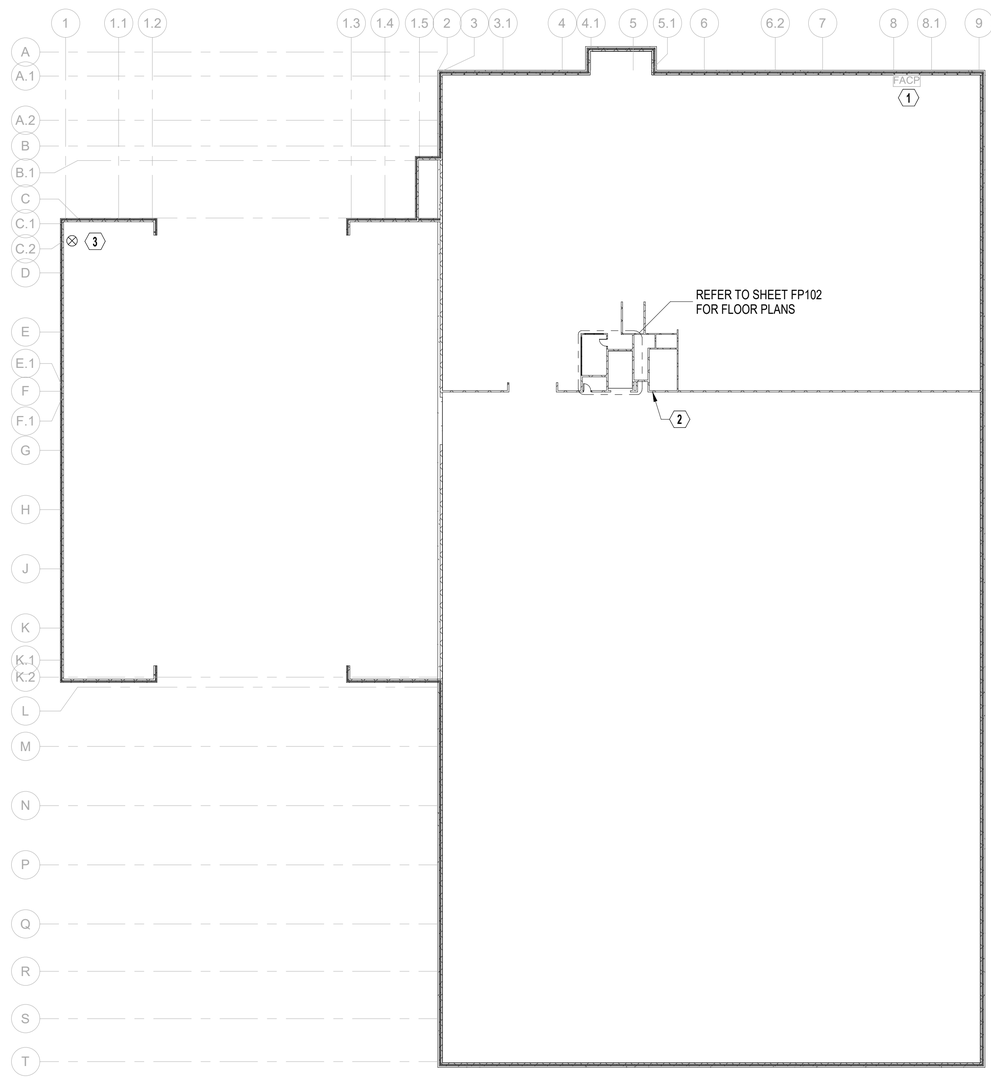

A1 OVERALL FIRE PROTECTION FIRST FLOOR PLAN

SCALE: 1/32" = 1'-0"

GRAPHIC SCALE:

1/32" =1'-0" 0' 16' 32' 64'

JENSEN HUGHES

SYM	DESCRIPTION	DATE	APPR

NAVFAC

COMMONWEALTH OF VIRGINIA
AARON P FREID
Lic. No. 044409
01 JUN 2024
PROFESSIONAL ENGINEER
SEAL

mbf architects pa
317-C Pollock Street | New Bern, NC 28560
252.637.6373 | mbfarchitects.com
A/E INFO

APPROVED

FOR COMMANDER NAVFAC

ACTIVITY

SATISFACTORY TO

DES KEC DRW KEC CHK APF

PM/DM H. PERRY

BRANCH MANAGER P. FAULKNER

CHIEF ENG/ARCH

FIRE PROTECTION

DEPARTMENT OF THE NAVY
NAVAL FACILITIES ENGINEERING SYSTEMS COMMAND
NAVAL FACILITIES ENGINEERING SYSTEMS COMMAND ~ MIDATLANTIC
DESIGN AND CONSTRUCTION (DC) CORE
NAVAL STATION - NORFOLK, VA
MARINE CORPS AIR STATION CHERRY POINT, NC

OVERHAUL ELEVATOR - BUILDING 4224

FIRE PROTECTION OVERALL FIRST FLOOR PLAN

SCALE: AS INDICATED

EPROJECT NO.:

STA. PROJ. NO.: 7320479

NAVFAC DRAWING NO. 12908237

SHEET 12 OF 31

FP101

FINAL SUBMITTAL

DRAWFORM REVISION: 25 AUGUST 2020

C:\Users\afreid\OneDrive - Jensen Hughes\Documents\2325 FIRE 2023_afreid.rvt
6/12/2024 1:48:28 PM

File
Print

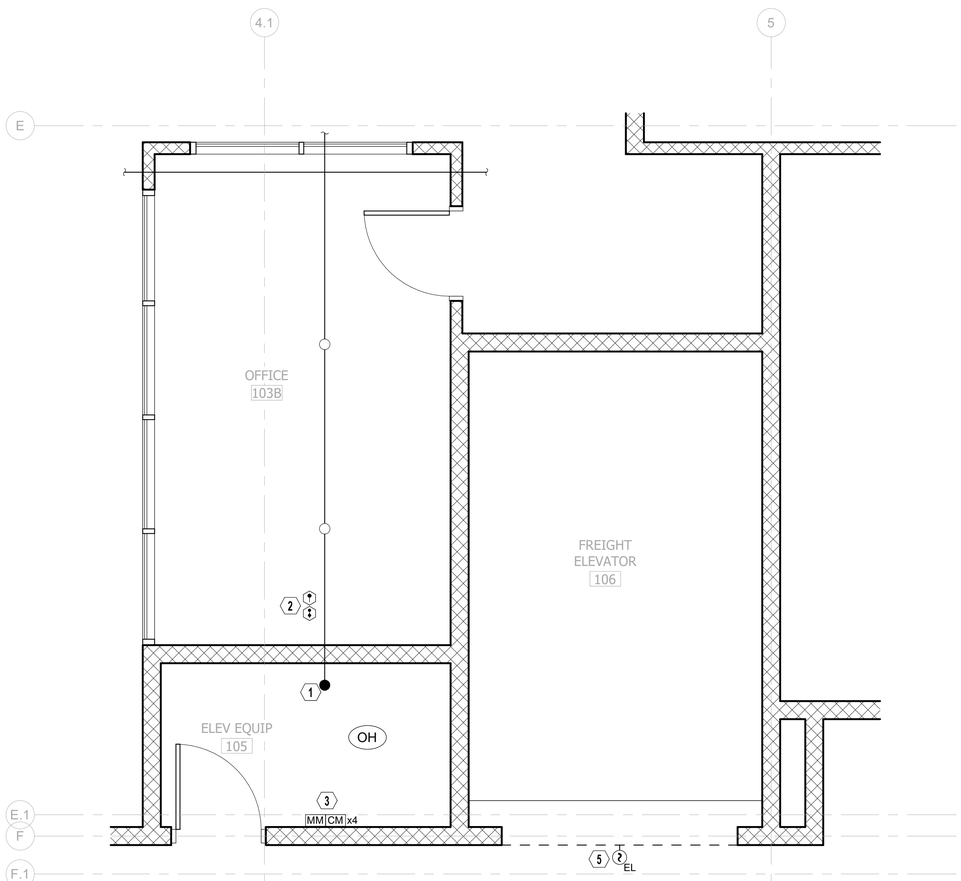

A1 FIRE PROTECTION FIRST FLOOR PLAN

SCALE: 3/8" = 1'-0"

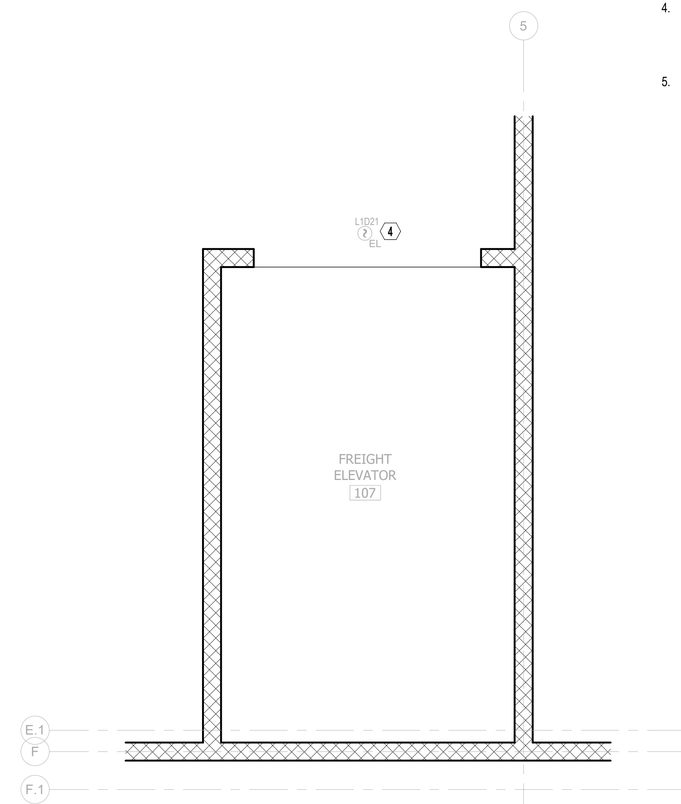

A4 FIRE PROTECTION SECOND FLOOR PLAN

SCALE: 3/8" = 1'-0"

KEY NOTES

1. REMOVE EXISTING CAPPED SPRINKLER AND PROVIDE SPRINKLERS THROUGHOUT THE ELEVATOR EQUIPMENT ROOM.
2. PROVIDE A TAMPER SWITCH, CHECK VALVE, AND WATERFLOW SWITCH IN THE SPRINKLER PIPING SERVING THE ELEVATOR EQUIPMENT ROOM. WATERFLOW SWITCH IS NOT PERMITTED TO HAVE A TIME DELAY FUNCTION. WATERFLOW SWITCH MUST BE PROVIDED WITH AN INSPECTOR'S TEST CONNECTION WITH THE DRAIN PIPED TO THE EXTERIOR.
3. PROVIDE MONITOR MODULE TO SUPERVISE POWER TO THE SHUNT TRIP BREAKER. PROVIDE CONTROL MODULES TO ACTIVATE THE PRIMARY ELEVATOR RECALL, SECONDARY ELEVATOR RECALL, AND FIREMAN'S HAT.
4. UPDATE FIRE ALARM SYSTEM PROGRAMMING TO RECALL ELEVATOR ON ACTIVATION OF EXISTING SMOKE DETECTOR.
5. MOUNT SMOKE DETECTOR WITHIN 60" OF THE TOP OF THE ELEVATOR DOOR.

GRAPHIC SCALE:

3/8" =1'-0" 0' 2' 4' 6'

JENSEN HUGHES

SYM	DESCRIPTION	DATE	APPR

NAVFAC

COMMONWEALTH OF VIRGINIA
AARON P FREID
Lic. No. 044409
01 JUN 2024
PROFESSIONAL ENGINEER
SEAL

mbf architects pa
317-C Pollock Street | New Bern, NC 28560
252.637.6373 | mbfarchitects.com
A/E INFO

APPROVED

FOR COMMANDER NAVFAC
ACTIVITY

SATISFACTORY TO
DES KEC DRW KEC CHK APF
PM/DM H. PERRY
BRANCH MANAGER P. FAULKNER
CHIEF ENG/ARCH
FIRE PROTECTION

DEPARTMENT OF THE NAVY
NAVAL FACILITIES ENGINEERING SYSTEMS COMMAND
DESIGN AND CONSTRUCTION (DC) CORE
NAVAL FACILITIES ENGINEERING SYSTEMS COMMAND ~ MIDATLANTIC
NAVAL STATION - NORFOLK, VA
MARINE CORPS AIR STATION CHERRY POINT, NC

OVERHAUL ELEVATOR - BUILDING 4224

FIRE PROTECTION ELEVATOR NEW WORK FLOOR PLAN

SCALE: AS INDICATED
EPROJECT NO.:
STA. PROJ. NO.: 7320479
NAVFAC DRAWING NO. 12908238
SHEET 13 OF 31

FP102

FINAL SUBMITTAL

DRAWFORM REVISION: 25 AUGUST 2020

File C:\Users\afreid\OneDrive - Jensen Hughes\Documents\2325 FIRE 2023_afreid.rvt
Print 6/12/2024 1:48:28 PM

FIRE ALARM INPUT	ACTIVATE FIRE ALARM EVACUATION THROUGHOUT BUILDING	SHUNT TRIP POWER TO ELEVATOR (NO TIME DELAY)	ACTIVATE ELEVATOR RECALL TO PRIMARY LEVEL	ACTIVATE ELEVATOR RECALL TO SECONDARY LEVEL	ACTIVATE FIREMAN'S HAT (CONSTANT)	ACTIVATE FIREMAN'S HAT (FLASH)	ALARM CONDITION AT FACP	SUPERVISORY CONDITION AT FACP	TROUBLE CONDITION AT FACP	TRANSMIT ALARM SIGNAL TO FIRE DEPARTMENT	TRANSMIT SUPERVISORY SIGNAL TO FIRE DEPARTMENT	TRANSMIT TROUBLE SIGNAL TO FIRE DEPARTMENT
ELEVATOR MACHINE ROOM WATERFLOW SWITCH	●	●					●			●		
ELEVATOR MACHINE ROOM SPRINKLER SYSTEM TAMPER SWITCH								●			●	
ELEVATOR MACHINE ROOM SMOKE DETECTOR	●			●		●	●			●		
FIRST FLOOR ELEVATOR LANDING SMOKE DETECTOR	●			●	●		●			●		
SECOND FLOOR ELEVATOR LANDING SMOKE DETECTOR	●		●		●		●			●		
ELEVATOR SHUNT TRIP POWER FAILURE								●			●	
FACP CIRCUIT FAULT (OPEN, GROUND, SHORT)									●			●

NOTE: MATRIX LIMITED TO CONDITIONS FOUND IN THE AREA OF WORK. EXISTING SEQUENCE OF OPERATIONS TO OTHERWISE REMAIN IN USE.

C1 FIRE ALARM SYSTEM SEQUENCE OF OPERATIONS

SCALE: NOT TO SCALE

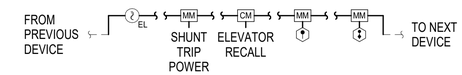

FIRST FLOOR

NOTE: SEE FLOOR PLANS FOR THE QUANTITY OF DEVICES REQUIRED

C4 FIRE ALARM SYSTEM RISER DIAGRAM

SCALE: NOT TO SCALE

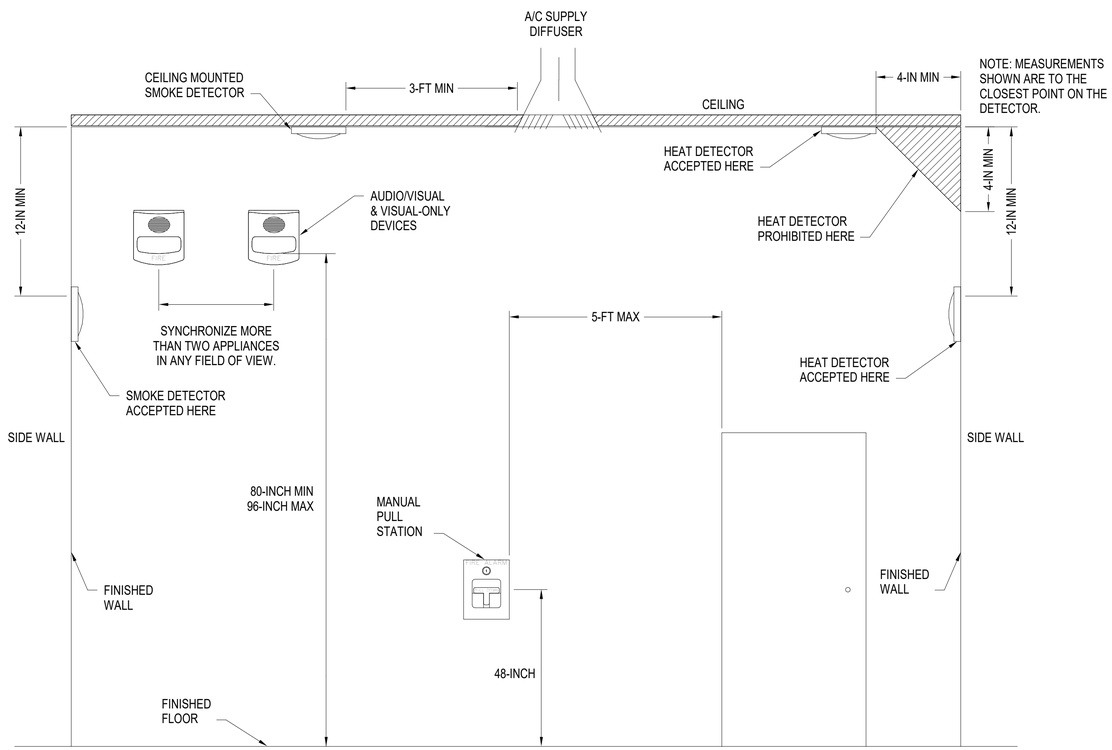

A1 TYPICAL DEVICE MOUNTING HEIGHTS

SCALE: NOT TO SCALE

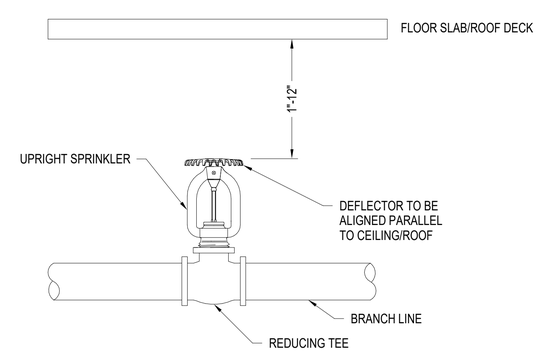

A4 TYPICAL UPRIGHT SPRINKLER

SCALE: NOT TO SCALE

JENSEN HUGHES

SYM	DESCRIPTION	DATE	APPR

NAVFAC

COMMONWEALTH OF VIRGINIA
AARON P FREID
Lic. No. 044409
01 JUN 2024
PROFESSIONAL ENGINEER
SEAL

mbf architects pa
317-C Pollock Street | New Bern, NC 28560
252.637.6373 | mbfarchitects.com
A/E INFO

APPROVED

FOR COMMANDER NAVFAC
ACTIVITY

SATISFACTORY TO

DES	KEC	DRW	KEC	CHK	APF
PM/DM					H. PERRY
BRANCH MANAGER					P. FAULKNER
CHIEF ENG/ARCH					
FIRE PROTECTION					

DEPARTMENT OF THE NAVY
NAVAL FACILITIES ENGINEERING SYSTEMS COMMAND
DESIGN AND CONSTRUCTION (DC) CORE
NAVAL FACILITIES ENGINEERING SYSTEMS COMMAND ~ MIDATLANTIC
NAVAL STATION - NORFOLK, VA
MARINE CORPS AIR STATION CHERRY POINT, NC

OVERHAUL ELEVATOR - BUILDING 4224

FIRE PROTECTION DETAILS

SCALE: AS INDICATED
EPROJECT NO.:
STA. PROJ. NO.: 7320479
NAVFAC DRAWING NO. 12908239
SHEET 14 OF 31

FP501

FINAL SUBMITTAL

DRAWFORM REVISION: 25 AUGUST 2020

C:\Users\afreid\OneDrive - Jensen Hughes\Documents\2325 FIRE 2023_afreid.rvt
6/12/2024 1:48:29 PM
File
Print

PROJECT NOTES

1. COORDINATE WITH THE ARCHITECTURAL DRAWINGS FOR EXACT LOCATION OF PLUMBING FIXTURES AND DRAINS.
2. HOSE BIBBS SHALL BE PROTECTED WITH AN APPROVED NON-REMOVABLE TYPE BACKFLOW PROTECTION DEVICE. HOSE BIBBS SHALL BE MOUNTED AT 18" ABOVE FINISH FLOOR UNLESS OTHERWISE NOTED.
3. COORDINATE AND VERIFY SIZES, LOCATIONS, DEPTHS AND PIPING PRESSURES OF ALL BUILDING UTILITIES WITH CIVIL.
4. COORDINATE AND SCHEDULE TIMING FOR UTILITY SERVICE CONNECTION.
5. ALL LINES BELOW SLAB OR GRADE TO BE LOCATED AWAY FROM ALL LOAD BEARING FOOTINGS.
6. ALL VENTS THRU ROOF SHALL BE A MINIMUM OF 18" VERTICAL AND TEN FEET HORIZONTAL AWAY FROM ALL AIR CONDITIONING FRESH AIR INTAKES AND PROVIDED WITH VANDAL PROOF HOODS. PROVIDE A SWING ON THE VENT PIPE SUCH THAT PIPE PENETRATIONS OCCUR AT THE CENTER OF THE METAL ROOF PANS. TRANSITION FROM PVC TO CAST IRON PIPE A MINIMUM OF 1'-0" BELOW THE ROOF DECK AND EXTEND CAST IRON TO A MINIMUM OF 1'-0" ABOVE THE ROOF SURFACE. PROVIDE NO-HUB JOINTS AT PIPE TRANSITIONS.
7. COORDINATE ALL EQUIPMENT LOCATIONS, PIPE PENETRATIONS AND EQUIPMENT PAD LOCATIONS WITH STRUCTURAL DRAWINGS PRIOR TO WORK.
8. COORDINATE INSTALLATION OF ALL EQUIPMENT AND PIPING WITH OTHER TRADES PRIOR TO INSTALLATION. ENSURE THAT ALL CONTROL DEVICES, SHUT-OFF VALVES, ETC. ARE ACCESSIBLE FOR MAINTENANCE. WHERE ACCESS PANELS ARE REQUIRED IN FINISHED SPACES, OTHER THAN THAT SHOWN, CONTRACTOR SHALL PROVIDE AND COORDINATE EXACT LOCATION OF PANELS WITH ARCHITECT PRIOR TO INSTALLATION.
9. PERFORM ALL WORK IN ACCORDANCE WITH UFC 3-420-01 PLUMBING SYSTEMS.
10. THE C0NTRACTOR IS RESPONSIBLE TO PROVIDE ALL MATERIALS NECESSARY TO COMPLETE SCOPE OF WORK UNLESS OTHERWISE SPECIFIED.
11. INSTALLATION OF PLUMBING PIPING SHALL BE COORDINATED WITH OTHER TRADES TO AVOID CONFLICTS.
12. CONTRACTOR SHALL NOT ORDER EQUIPMENT OR BEGIN FABRICATION OF PARTS PRIOR TO SHOP DRAWING APPROVAL.
13. TEST, BALANCE, STERILIZE AND FLUSH PIPING SYSTEMS. CLEAN ALL EQUIPMENT AND FIXTURES AT THE COMPLETION OF THE PROJECT. KEEP PREMISES CLEAN DURING CONSTRUCTION.
14. PROVIDE ACCESS DOORS/PANELS AT LOCATION OF VALVES AND OTHER COMPONENTS WHERE LOCATED ABOVE HARD CEILINGS OR INSIDE WALLS.
15. ALL SLOPES AND INVERT ELEVATIONS SHALL BE VERIFIED BEFORE ANY PIPING IS INSTALLED IN ORDER TO ENSURE THAT PROPER SLOPES ARE MAINTAINED.
16. ALL WATER LINES SHALL HAVE SHUT-OFF VALVES AT CONNECTIONS OF FIXTURES AND EQUIPMENT. PROVIDE DRAIN VALVES AT PIPING LOW POINTS.
17. PIPE PENETRATIONS THROUGH FIRE OR SMOKE PARTITIONS, WALLS, AND/OR FLOORS SHALL BE MADE FIRE AND SMOKE TIGHT. MAINTAIN FIRE RATING OF FLOOR AND WALL ASSEMBLIES IN ACCORDANCE WITH UL SYSTEMS. INSTALL PIPE PENETRATION ASSEMBLIES IN ACCORDANCE WITH UL LISTED MANUFACTURER'S RECOMMENDATIONS. PENETRATIONS SHALL BE IN ACCORDANCE WITH IAW UL THROUGH-WALL DIRECTORY.
18. FIELD VERIFY CONDITIONS BEFORE STARTING CONSTRUCTION AND NOTIFY THE ARCHITECT/ENGINEER OF DISCREPANCIES WITH THE CONSTRUCTION DOCUMENTS AND/OR POTENTIAL PROBLEMS OBSERVED BEFORE COMMENCING WORK IN AFFECTED AREAS.
19. PROVIDE ALL NECESSARY HANGERS FOR SUPPORT OF HORIZONTAL AND VERTICAL PIPING IN ACCORDANCE WITH GOOD PRACTICE AND MANUFACTURES RECOMMENDATIONS. PROVIDE SLEEVES AND ESCUTCHEONS FOR ALL PIPING PASSING THROUGH WALLS AND FLOORS.
20. IN GENERAL, ALL PIPING SHALL BE RUN CONCEALED IN SUSPENDED CEILING AND PIPE SPACES PROVIDED UNLESS NOTED OR INDICATED OTHERWISE.

PLUMBING LEGEND AND ABBREVIATIONS

	SANITARY SEWER PIPING (SAN)
	VENT PIPING (V)
	COLD WATER PIPING (CW)
	HOT WATER PIPING (HW)
	HOT WATER RETURN PIPING (HWR)
	ELL TURNS UP
	ELL TURNS DOWN
	CHECK VALVE
	BALL VALVE
	GATE VALVE IN HORIZONTAL POSITION
	CLEANOUT IN GROUND (GCO)
	CLEANOUT IN FLOOR OR SLAB (FCO)
	CLEANOUT IN WALL (WCO)
	CLEANOUT BELOW FLOOR (CO)
A.F.F.	ABOVE FINISH FLOOR
B.F.F.	BELOW FINISH FLOOR
FD - X	FLOOR DRAIN - TYPE (SEE SCHEDULE)
H.B.	HOSE HIBB
H.D.	HUB DRAIN
V.T.R.	VENT THROUGH ROOF
FPWH	FREEZE PROOF WALL HYDRANT
CV	COMMON VENT
BOCV	BEGINNING OF CIRCUIT VENT
EOCV	END OF CIRCUIT VENT
RPZ	REDUCED PRESSURE ZONE
ASL	ABOVE SEA LEVEL

SYM	DESCRIPTION	DATE	APPR

NAVFAC

SEAL 033773 PROFESSIONAL ENGINEER DANNY L. BRUSH 6/1/24

SEAL

CRENSHAW CONSULTING GROUP, INC.
NC LICENSE #C-1589
2609 North Salisbury, Suite 200
Raleigh, North Carolina 27604
919-571-0270 Fax: 571-0009

A/E INFO

APPROVED

FOR COMMANDER NAVFAC

ACTIVITY

SATISFACTORY TO

DES PRC | DRW PRC | CHK DLB

PM/DM H. PERRY

BRANCH MANAGER P. FAULKNER

CHIEF ENG/ARCH

FIRE PROTECTION

DEPARTMENT OF THE NAVY
NAVAL FACILITIES ENGINEERING SYSTEMS COMMAND
DESIGN AND CONSTRUCTION (DC) CORE
NAVAL FACILITIES ENGINEERING SYSTEMS COMMAND ~ MIDATLANTIC
NAVAL STATION - NORFOLK, VA
MARINE CORPS AIR STATION
CHERRY POINT, NC

OVERHAUL ELEVATOR - BUILDING 4224

PLUMBING LEGENDS AND NOTES

SCALE: AS INDICATED

EPROJECT NO.:

STA. PROJ. NO.: 7320479

NAVFAC DRAWING NO. 12908240

SHEET 15 OF 31

P-001

DRAWFORM REVISION: 25 AUGUST 2020

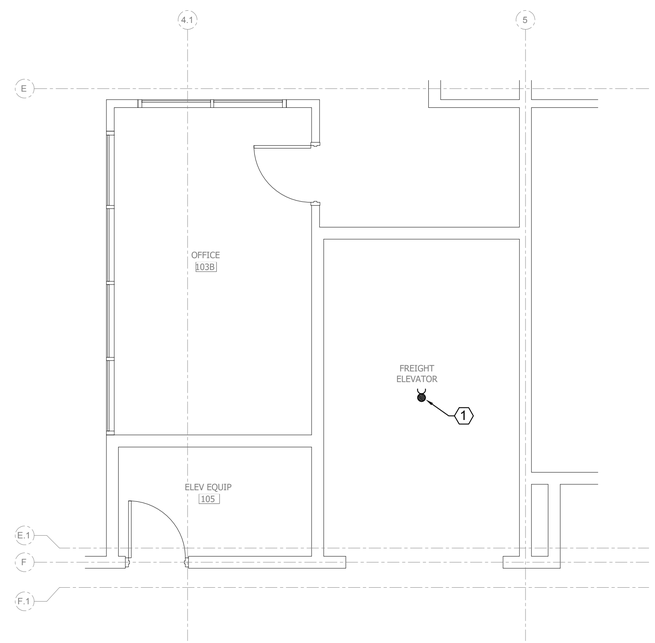

A3 FIRST FLOOR PLAN - PLUMBING DEMOLITION
SCALE: 1/4"=1'-0"

N

GENERAL SHEET NOTES

NEW WORK KEYNOTES

1 PLUG AND CAP OFF EXISTING DRAIN LOCATED IN THE PIT.

GRAPHIC SCALE: 1/4"=1'-0"
4' 0 2' 4' 8'

SYM	DESCRIPTION	DATE	APPR

NAVFAC

NICHOLAS CARCIONE PROFESSIONAL SEAL 033773 ENGINEER DANNY L. BRUSH 6/1/24
SEAL

CRENSHAW CONSULTING ENGINEERS
NC LICENSE: C-1589
www.crenshawconsulting.com
3600 North Harvard, Suite 200
Raleigh, North Carolina 27609
919-571-9270 Fax: 571-9009
A/E INFO

APPROVED
FOR COMMANDER NAVFAC
ACTIVITY
SATISFACTORY TO

DES	PRC	DRW	PRC	CHK	DLB

PM/DM H. PERRY
BRANCH MANAGER P. FAULKNER
CHIEF ENG/ARCH
FIRE PROTECTION

DEPARTMENT OF THE NAVY
NAVAL FACILITIES ENGINEERING SYSTEMS COMMAND
NAVAL FACILITIES ENGINEERING SYSTEMS COMMAND – MIDATLANTIC
DESIGN AND CONSTRUCTION (DC) CORE
NAVAL STATION - NORFOLK, VA
MARINE CORPS AIR STATION CHERRY POINT, NC

OVERHAUL ELEVATOR - BUILDING 4224

FLOOR PLAN - PLUMBING DEMOLITION

SCALE: AS INDICATED
EPROJECT NO.:
STA. PROJ. NO.: 7320479
NAVFAC DRAWING NO. 12908241
SHEET 16 OF 31

PD101

DRAWFORM REVISION: 25 AUGUST 2020

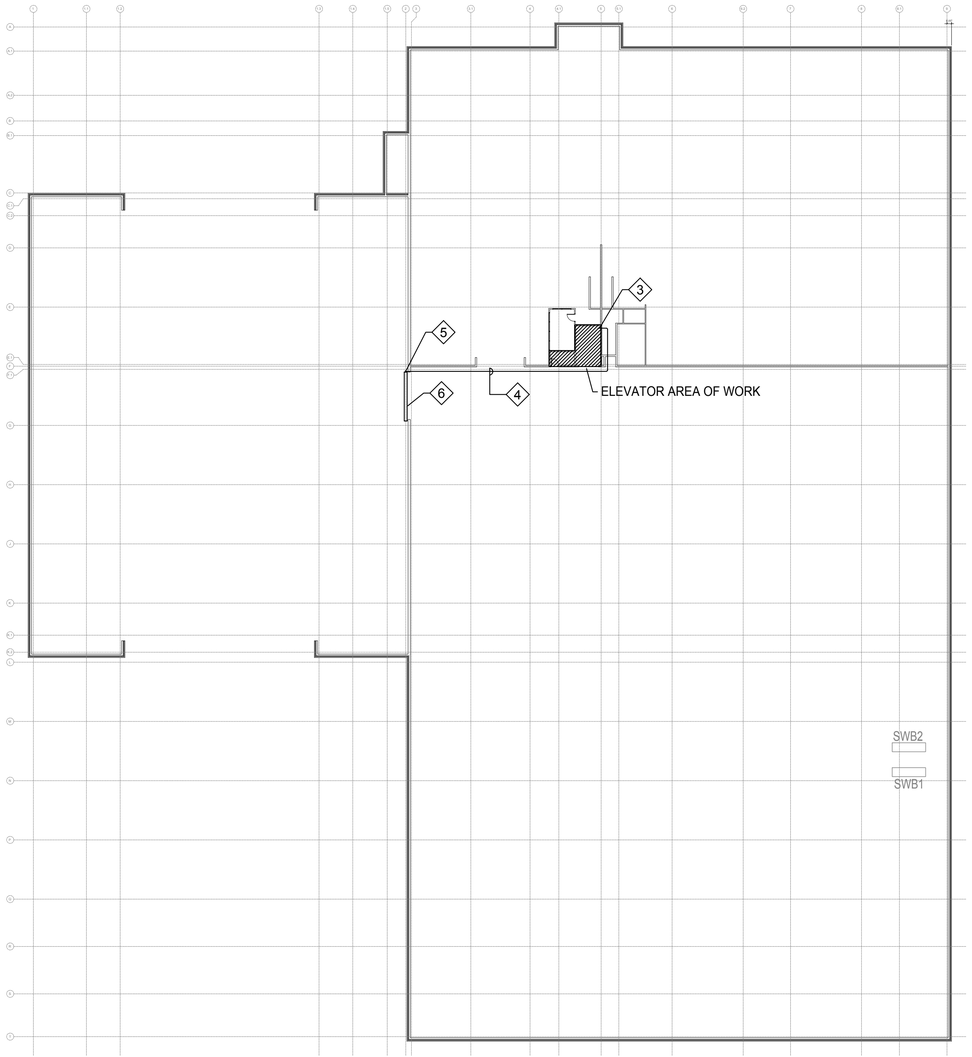

A1 FIRST FLOOR PLAN - PLUMBING
SCALE: 1/32"=1'-0"

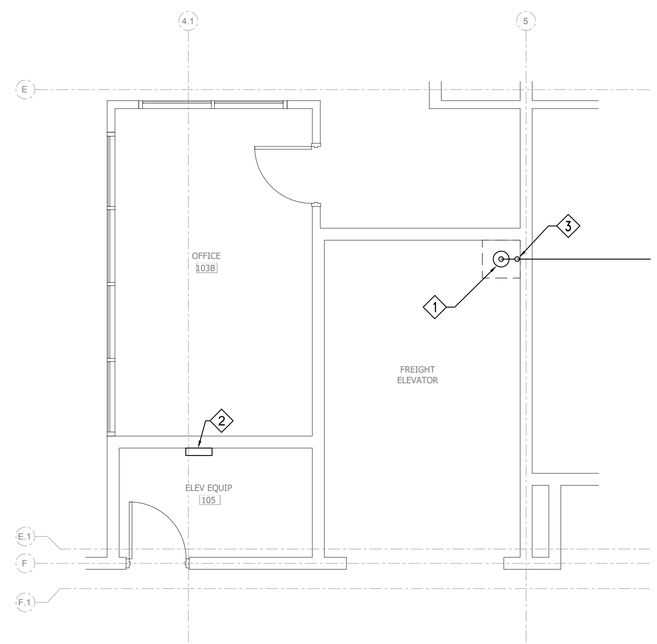

A3 FIRST FLOOR PLAN - PLUMBING
SCALE: 1/4"=1'-0"

GENERAL SHEET NOTES

1. SEE SHEET P-001 FOR GENERAL NOTES, LEGEND, AND ABBREVIATIONS.

NEW WORK KEYNOTES

1. SUMP PUMP MOUNTED IN 24"x24"x24" DEEP PIT.
2. SUMP PUMP CONTROL PANEL.
3. TURN 2" SUMP PUMP DISCHARGE PIPE UP IN WALL TO ABOVE CEILING AT THIS LOCATION.
4. ROUTE 2" SUMP PUMP DISCHARGE ABOVE CEILING.
5. TURN 2" SUMP PUMP DISCHARGE DOWN AT WALL AS TIGHT AS POSSIBLE. TERMINATE PIPE AT 6" ABOVE EXISTING TRENCH DRAIN.
6. EXISTING 3" TRENCH DRAIN. THIS DRAIN IS PIPED TO THE INDUSTRIAL WASTE SYSTEM.

GRAPHIC SCALE: 1/4"=1'-0"
4' 0 2' 4' 8'

GRAPHIC SCALE: 1/32"=1'-0"
32' 0 16' 32' 64'

SYM	DESCRIPTION	DATE	APPR

NAVFAC

SEAL
033773
DANNY L. BRUSH
PROFESSIONAL ENGINEER
6/1/24
SEAL

CRENSHAW CONSULTING
NC LICENSE: C-1500
3600 North Harvard, Suite 200
Raleigh, North Carolina 27609
919-571-0070 Fax: 571-0009
A/E INFO

APPROVED
FOR COMMANDER NAVFAC
ACTIVITY
SATISFACTORY TO
DES PRC DRW PRC CHK DLB
PM/DM H. PERRY
BRANCH MANAGER P. FAULKNER
CHIEF ENG/ARCH
FIRE PROTECTION

DEPARTMENT OF THE NAVY
NAVAL FACILITIES ENGINEERING SYSTEMS COMMAND
DESIGN AND CONSTRUCTION (DC) CORE
NAVAL FACILITIES ENGINEERING SYSTEMS COMMAND
NAVAL STATION - NORFOLK, VA
MARINE CORPS AIR STATION
CHERRY POINT, NC

OVERHAUL ELEVATOR - BUILDING 4224

FLOOR PLAN - PLUMBING

SCALE: AS INDICATED
EPROJECT NO.:
STA. PROJ. NO.: 7320479
NAVFAC DRAWING NO. 12908242
SHEET 17 OF 31

P-101

DRAWFORM REVISION: 25 AUGUST 2020

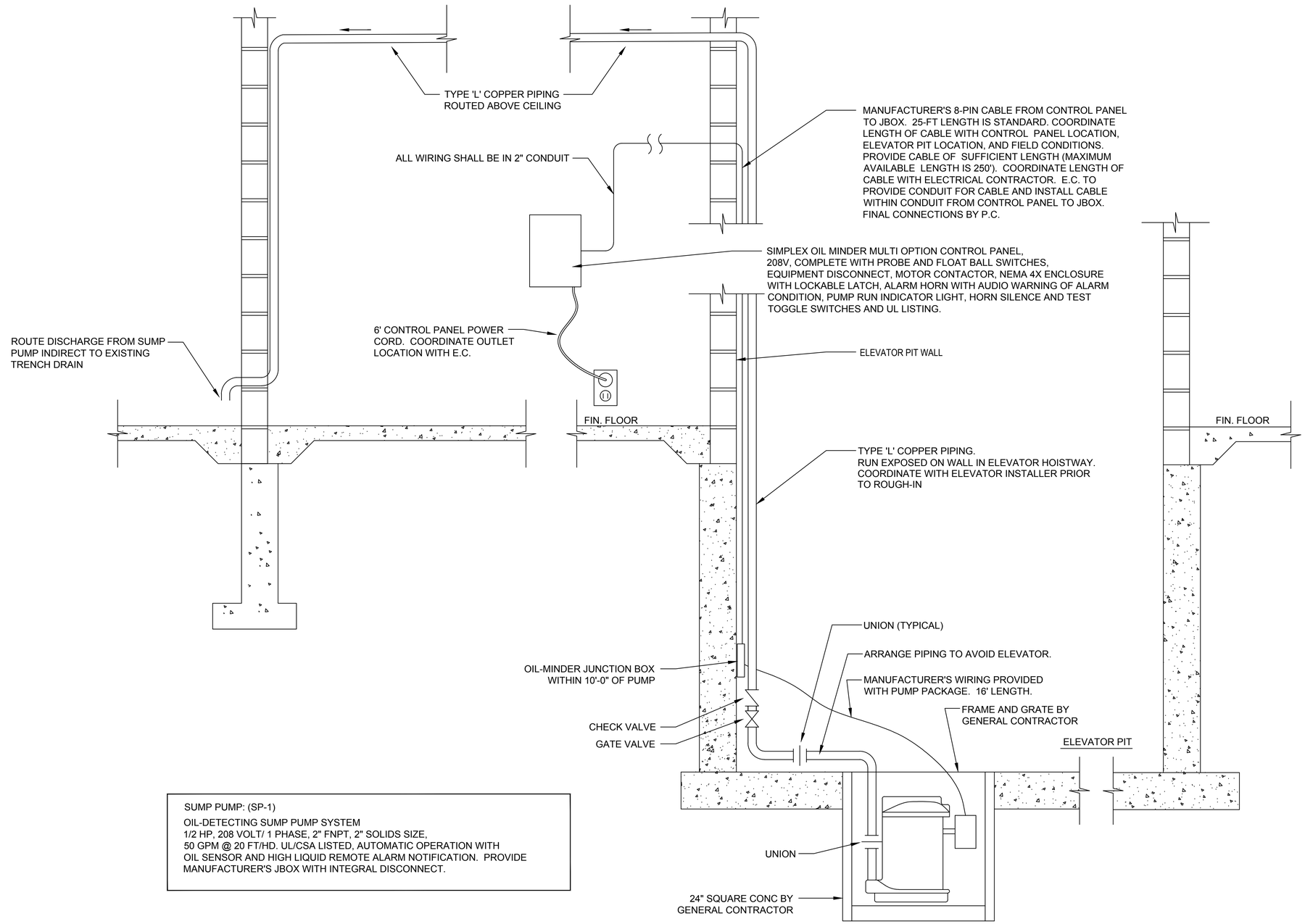

SUMP PUMP: (SP-1)

OIL-DETECTING SUMP PUMP SYSTEM
1/2 HP, 208 VOLT/ 1 PHASE, 2" FNPT, 2" SOLIDS SIZE,
50 GPM @ 20 FT/HD. UL/CSA LISTED, AUTOMATIC OPERATION WITH
OIL SENSOR AND HIGH LIQUID REMOTE ALARM NOTIFICATION. PROVIDE
MANUFACTURER'S JBOX WITH INTEGRAL DISCONNECT.

A3 SUMP PUMP EVACUATION DETAIL

SCALE: NONE

SYM	DESCRIPTION	DATE	APPR

NAVFAC

NORTH CAROLINA PROFESSIONAL SEAL 033773 ENGINEER DANNY L. BRUSH 6/1/24

SEAL

CRENSHAW CONSULTING GROUP, PLLC
NC LICENSE: C-1500
3600 Arco Corporate Drive, Suite 300
Raleigh, North Carolina 27609
919-571-5570 Fax: 571-5009

A/E INFO

APPROVED

FOR COMMANDER NAVFAC

ACTIVITY

SATISFACTORY TO

DES PRC | DRW PRC | CHK DLB

PM/DM H. PERRY

BRANCH MANAGER P. FAULKNER

CHIEF ENG/ARCH

FIRE PROTECTION

DEPARTMENT OF THE NAVY
NAVAL FACILITIES ENGINEERING SYSTEMS COMMAND
DESIGN AND CONSTRUCTION (DC) CORE
NAVAL FACILITIES ENGINEERING SYSTEMS COMMAND ~ MIDATLANTIC
NAVAL STATION - NORFOLK, VA.
MARINE CORPS AIR STATION CHERRY POINT, NC

OVERHAUL ELEVATOR - BUILDING 4224

PLUMBING - DETAILS

SCALE: AS INDICATED

EPROJECT NO.:

STA. PROJ. NO.: 7320479

NAVFAC DRAWING NO. 12908243

SHEET 18 OF 31

P-501

DRAWFORM REVISION: 25 AUGUST 2020

MECHANICAL NOTES

GENERAL REQUIREMENTS

1. THE CONTRACTOR MUST PROVIDE ALL SPECIFIED AND MISCELLANEOUS MATERIAL AND LABOR AS REQUIRED FOR A COMPLETE AND OPERATING SYSTEM AS DESCRIBED BY THE CONTRACT DOCUMENTS.
2. ALL EQUIPMENT AND MATERIALS MUST BE INSTALLED IN ACCORDANCE WITH ALL APPLICABLE CODES AND RECOMMENDATIONS OF THE MANUFACTURERS. IF THERE IS A CONFLICT IN THE ABOVE REQUIREMENTS, THE MORE STRINGENT MUST BE USED.
3. ALL DUCTWORK AND EQUIPMENT SHOWN ON THESE DRAWINGS IS STRICTLY DIAGRAMMATIC. ALL DUCTWORK SIZES SHOWN ARE FREE AREA SIZES. FIELD VERIFY DIMENSIONS AND CONDITIONS BEFORE COMMENCING WORK. IF A CONFLICT IS IDENTIFIED, REPORT IT TO THE CONTRACTING OFFICER BEFORE PROCEEDING.
4. ALL SHEET-METAL DUCTWORK MUST BE CONSTRUCTED OF GALVANIZED STEEL SHEETS IN ACCORDANCE WITH SMACNA GAGES AND STANDARDS AND SEALED TO SMACNA CLASSIFICATION "A".
5. PRIOR TO CONSTRUCTION, THE CONTRACTOR MUST COORDINATE HIS WORK BETWEEN ALL TRADES. ALL DRAWINGS INDICATE THE GENERAL ARRANGEMENT DESIRED. THE EXACT LOCATIONS AND DETAILS OF CONSTRUCTION MAY BE SUCH THAT VARIANCES ARE REQUIRED. THE DRAWINGS DO NOT SHOW ALL BENDS, OFFSETS, AND FITTINGS THAT MAY BE REQUIRED FOR THE COMPLETE EXECUTION OF THIS CONTRACT. SUCH VARIANCES AND CONTINGENCIES MUST BE ALLOWED FOR IN THE CONTRACTOR'S BID AND MUST BE ACCOMPLISHED WITHOUT ADDITIONAL COST TO THE GOVERNMENT. PRIOR TO ORDERING EQUIPMENT, THE CONTRACTOR MUST PREPARE COORDINATION DRAWINGS SHOWING HOW ALL EQUIPMENT IS TO BE LOCATED IN THE SPACE INDICATED. THIS DRAWING MUST SHOW THE NEW AND EXISTING WORK OF ALL TRADES.
6. DO NOT SCALE THESE DRAWINGS. REFER TO THE ARCHITECTURAL PLANS FOR DIMENSIONS.
7. ALL EQUIPMENT MUST BE LOCATED AND INSTALLED TO PROVIDE MAXIMUM SPACE FOR MAINTENANCE AND SERVICE, PER EQUIPMENT MANUFACTURERS RECOMMENDATIONS.
8. ALL MATERIALS USED MUST BE NEW AND FREE OF DEFECTS. ALL MATERIALS AND EQUIPMENT MUST BEAR THE UL LABEL OR EQUIVALENT WHERE APPLICABLE.
9. COORDINATE EXACT LOCATION OF ALL DIFFUSERS WITH LIGHTS, SPRINKLER HEADS, AND OTHER CEILING MOUNTED DEVICES. SEE THE REFLECTED CEILING PLAN.
10. THE CONTRACTOR MUST, AT THE COMPLETION OF THE WORK, CLEAN, POLISH, AND/OR WASH ALL EXPOSED ITEMS OF MATERIALS, EQUIPMENT, AND FIXTURES IN HIS CONTRACT TO LEAVE SUCH ITEMS BRIGHT AND CLEAN. THE CONTRACTOR MUST KEEP THE PREMISES CLEAR OF DEBRIS FROM HIS WORK DURING CONSTRUCTION AND LEAVE THE AREA AND BUILDING CLEAN AT COMPLETION OF THE CONTRACT.
11. MECHANICAL AND ELECTRICAL EQUIPMENT MUST OPERATE WITHOUT OBJECTIONABLE NOISE OR VIBRATION, AS DETERMINED BY THE CONTRACTING OFFICER. IF SUCH OBJECTIONABLE NOISE OR VIBRATION SHOULD BE PRODUCED AND TRANSMITTED TO OCCUPIED PORTIONS OF THE BUILDING, THE CONTRACTOR MUST MAKE THE NECESSARY CHANGES TO CORRECT THE NOISE OR VIBRATION WITHOUT ADDITIONAL COST TO THE GOVERNMENT.
12. VENTILATION AIR INTAKES MUST BE LOCATED A MINIMUM OF 10 FEET ABOVE THE GROUND AND 10 FEET FROM ALL EXHAUST DISCHARGE AND PLUMBING VENTS.
13. REPLACE ALL FILTERS JUST PRIOR TO ACCEPTANCE BY THE OFFICER IN CHARGE OF CONSTRUCTION.
14. ROUTE REFRIGERANT PIPING ABOVE THE DROP CEILING IN THE MOST DIRECT PATH POSSIBLE. INSULATE PER SPECIFICATIONS. PROVIDE LONG LINE REFRIGERATION KIT AS REQUIRED.
15. PROVIDE AN AUXILIARY DRAIN PAN FOR ANY AIR CONDITIONING EQUIPMENT LOCATED ABOVE A CEILING OR WHERE CONDENSATE OVERFLOW WOULD DAMAGE BUILDING COMPONENTS. THE AUXILIARY DRAIN PAN MUST BE PROVIDED WITH A FLOAT SWITCH THAT STOPS THE FAN UPON ACCUMULATION OF CONDENSATE IN THE PAN. LOCATE ALL EQUIPMENT ABOVE THE CEILING SO THAT ADEQUATE SLOPE IS PROVIDED FOR ALL DRAIN LINES. IF A CONDENSATE PUMP IS SPECIFIED, EXTEND THE AUXILIARY DRAIN PAN UNDER THE CONDENSATE PUMP. CONDENSATE DRAIN LINES MUST BE MADE OF TYPE 'K' COPPER PIPE. INSULATE DRAIN LINES TO PREVENT SWEATING. ROUTE CONDENSATE DRAINS TO NEAREST ROOF/FLOOR DRAIN, OR AS DIRECTED ON PLANS.
16. ALL MECHANICAL CONTROL WIRING MUST BE INSTALLED IN CONDUIT.
17. LOCATE TEMPERATURE/HUMIDITY SENSORS AS INDICATED ON THE PLANS.

ABBREVIATIONS

AFC	ABOVE FINISHED CEILING
AFF	ABOVE FINISHED FLOOR
BAS	BUILDING AUTOMATION SYSTEM
BTUH	BRITISH THERMAL UNIT PER HOUR
CFM	CUBIC FEET PER MINUTE
COND	CONDENSATE
CV	FLOW COEFFICIENT
CHWS	CHILLED WATER SUPPLY
CHWR	CHILLED WATER RETURN
DB	DRY BULB
DP	DEW POINT
EAT	ENTERING AIR TEMPERATURE
EA	EXHAUST AIR
ESP	EXTERNAL STATIC PRESSURE
EWT	ENTERING WATER TEMPERATURE
EX	EXISTING
F	FAHRENHEIT
FD	FLOOR DRAIN
FT	FEET
FLA	FULL LOAD AMPS
FPM	FEET PER MINUTE
GPM	GALLONS PER MINUTE
HP	HORSEPOWER
HSPF	HEATING SEASONAL PERFORMANCE FACTOR
HWS	HOT WATER SUPPLY
HWR	HOT WATER RETURN
HZ	HERTZ
KW	TOTAL POWER INPUT, KILOWATTS
LWT	LEAVING WATER TEMPERATURE
LAT	LEAVING AIR TEMPERATURE
LBS	POUNDS
MBH	MILLIONS BTU PER HOUR
MCA	MINIMUM CIRCUIT AMPS
MOCP	MAXIMUM OVER CURRENT PROTECTION
OA	OUTSIDE AIR
PH	PHASE
PD	PRESSURE DROP
P/T	PRESSURE/TEMPERATURE
PSI	POUNDS PER SQUARE INCH
RA	RETURN AIR
RL	REFRIGERANT LIQUID
RS	REFRIGERANT SUCTION
RPM	REVOLUTIONS PER MINUTE
SA	SUPPLY AIR
SEER	SEASONAL ENERGY EFFICIENCY RATIO
SF	SQUARE FEET
SHR	SENSIBLE HEAT RATIO
SP	STATIC PRESSURE
STM	STEAM
TYP	TYPICAL
WB	WET BULB
WC	WATER COLUMN
WPD	WATER PRESSURE DROP
VFD	VARIABLE FREQUENCY DRIVE

DRAWING LEGEND

	CEILING SUPPLY DIFFUSER
WXH	RECTANGULAR DUCT (W = WIDTH, H = HEIGHT)
	45° EXPANDED THROAT TAKEOFF WITH MANUAL VOLUME DAMPER
	MANUAL VOLUME DAMPER
	RECTANGULAR DUCT TURNS DOWN
	RECTANGULAR DUCT TURNS UP
E	HVAC SYSTEM EMERGENCY SHUTDOWN SWITCH
	DIRECTION OF FLOW
	UNION - SCREWED OR FLANGED
	CONCENTRIC REDUCER
	NEW PIPING
R	REFRIGERANT PIPING
	PIPING ELBOW TURNS DOWN
	PIPING ELBOW TURNS UP
T	WALL MOUNTED THERMOSTAT
	POINT OF TERMINATION

MARKS

DAC	DUCTLESS SPLIT AIR HANDLING UNIT
DHP	DUCTLESS SPLIT HEAT PUMP UNIT

SYM	DESCRIPTION	DATE	APPR

NAVFAC

NORTH CAROLINA PROFESSIONAL SEAL 056500 ENGINEER LUCAS W. MERADIS 06-01-21

SEAL

CRENSHAW CONSULTING
NO LICENSE #C-1558
www.crenshawconsulting.com
3516 Beth Drive, Suite 205
Raleigh, North Carolina 27610
919-571-5070 Fax 571-0009

A/E INFO

APPROVED:

FOR COMMANDER NAVFAC

ACTIVITY

SATISFACTORY TO

DES LWM | DRW LWM | CHK JDL

PM/DM H. PERRY

BRANCH MANAGER P. FAULKNER

CHIEF ENG/ARCH

FIRE PROTECTION

DEPARTMENT OF THE NAVY
NAVAL FACILITIES ENGINEERING SYSTEMS COMMAND
DESIGN AND CONSTRUCTION (DC) CORE
NAVAL FACILITIES ENGINEERING SYSTEMS COMMAND ~ MIDATLANTIC
NAVAL STATION ~ NORFOLK, VA.
MARINE CORPS AIR STATION CHERRY POINT, NC

OVERHAUL ELEVATOR - BUILDING 4224

MECHANICAL NOTES, LEGEND & ABBREVIATIONS

SCALE: AS INDICATED

EPROJECT NO.:

STA. PROJ. NO.: 7320479

NAVFAC DRAWING NO. 12908244

SHEET 19 OF 31

M-001

DRAWFORM REVISION: 25 AUGUST 2020

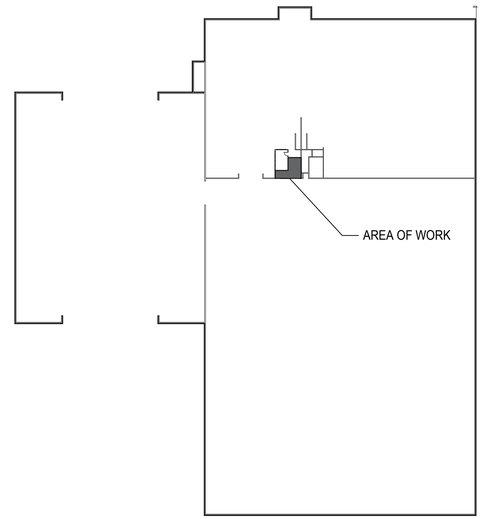

C3 FIRST FLOOR KEY PLAN
SCALE: NTS

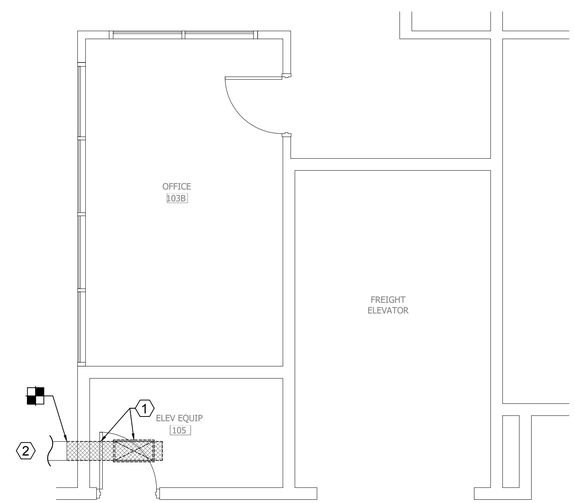

A3 FIRST FLOOR PLAN - MECHANICAL DEMOLITION
SCALE: 1/4"=1'-0"

GRAPHIC SCALE: 1/4"=1'-0"
4' 0 2' 4' 8'

GENERAL SHEET NOTES

1. SEE SHEET M-001 FOR GENERAL NOTES, LEGEND AND ABBREVIATIONS.

NEW WORK KEYNOTES

1. REMOVE EXISTING SUPPLY DUCTWORK AND DUCT MOUNTED GRILLE BACK TO POINT SHOWN AND CAP EXISTING DUCTWORK TO REMAIN. EXISTING WALL PENETRATION TO BE PATCHED TO MATCH EXISTING.
2. EXISTING AIR HANDLER TO REMAIN THAT SERVES AREA OUT OF SCOPE. EXISTING AIR HANDLER TO BE REBALANCED.

SYM	DESCRIPTION	DATE	APPR

NAVFAC

NORTH CAROLINA PROFESSIONAL SEAL 056500 ENGINEER LUCAS W. MERANDA
06-01-21
SEAL

CRENSHAW CONSULTING
NC LICENSE #C-1568
www.crenshawconsulting.com
8520 North Arrowood, Suite 200
Raleigh, North Carolina 27609
P:919-571-0070 Fax: 571-0009
A/E INFO

APPROVED
FOR COMMANDER NAVFAC
ACTIVITY
SATISFACTORY TO
DES LWM DRW LWM CHK JDL
PM/DM H. PERRY
BRANCH MANAGER P. FAULKNER
CHIEF ENG/ARCH
FIRE PROTECTION

DEPARTMENT OF THE NAVY
NAVAL FACILITIES ENGINEERING SYSTEMS COMMAND
DESIGN AND CONSTRUCTION (DC) CORE
NAVAL FACILITIES ENGINEERING SYSTEMS COMMAND – MIDATLANTIC
NAVAL STATION - NORFOLK, VA
MARINE CORPS AIR STATION CHERRY POINT, NC

OVERHAUL ELEVATOR - BUILDING 4224

FLOOR PLAN - MECHANICAL DEMOLITION

SCALE: AS INDICATED
EPROJECT NO.:
STA. PROJ. NO.: 7320479
NAVFAC DRAWING NO. 12908245
SHEET 20 OF 31

MD101

DRAWFORM REVISION: 25 AUGUST 2020

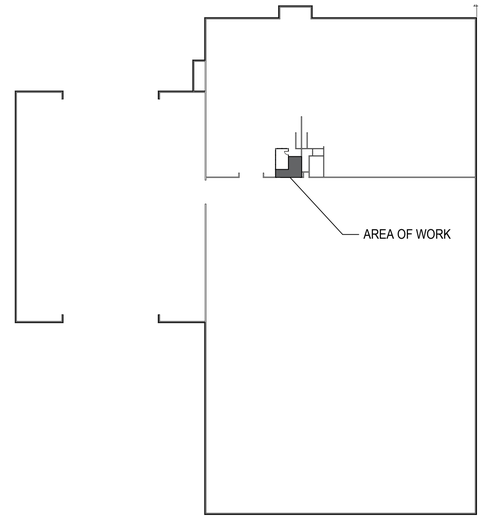

C3 FIRST FLOOR KEY PLAN
SCALE: NTS

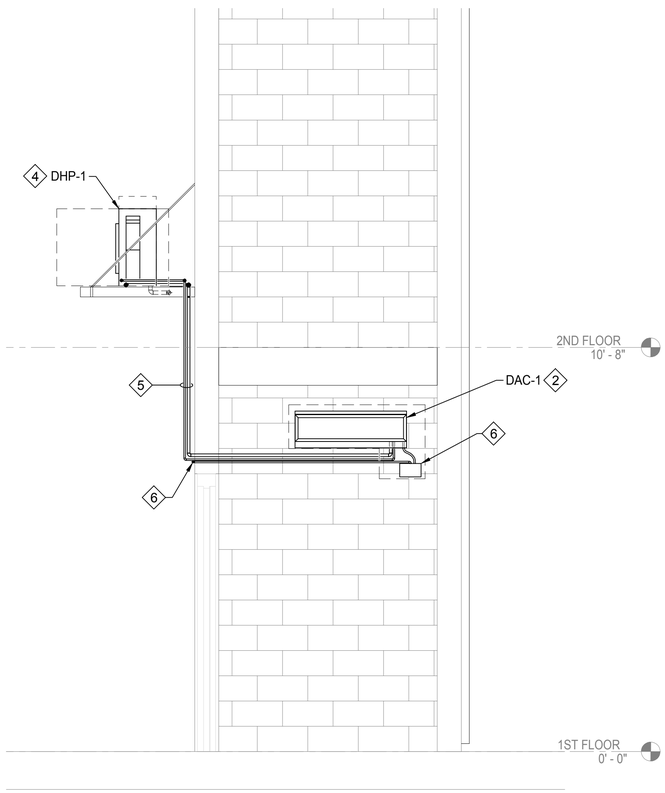

A1 SECTION VIEW AT ELEV EQUIP 105
SCALE: 1/2"=1'-0"

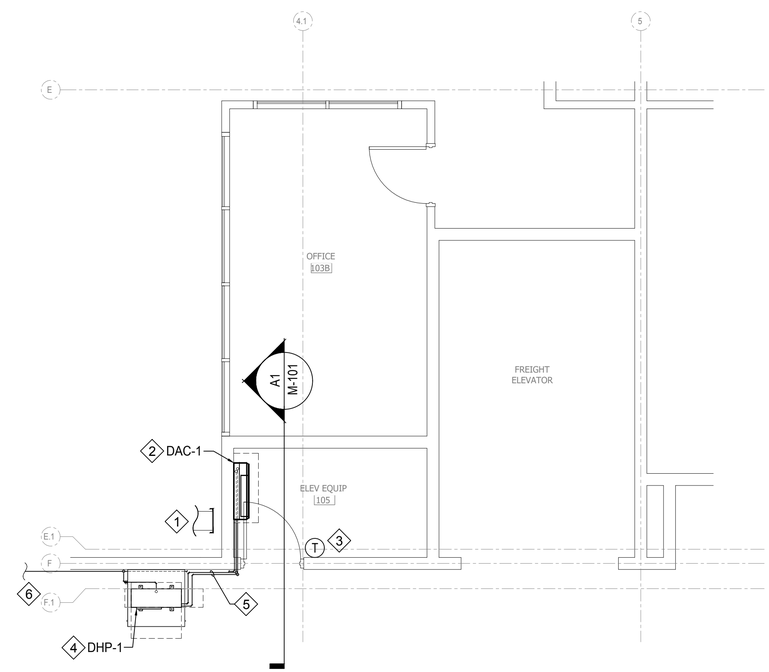

A3 FIRST FLOOR PLAN - MECHANICAL
SCALE: 1/4"=1'-0"

GENERAL SHEET NOTES

1. SEE SHEET M-001 FOR GENERAL NOTES, LEGEND AND ABBREVIATIONS.

NEW WORK KEYNOTES

1. EXISTING TO REMAIN.
2. PROVIDE NEW WALL-MOUNTED DUCTLESS SPLIT AIR HANDLER. INSTALL PER MANUFACTURERS RECOMMENDATIONS AND CLEARANCES. COORDINATE EXACT LOCATION OF AIR HANDLER WITH ALL PANELS AND EQUIPMENT TO BE INSTALLED IN ROOM.
3. PROVIDE NEW WALL MOUNTED THERMOSTAT MOUNTED AT 44" AFF.
4. PROVIDE NEW DUCTLESS SPLIT HEAT PUMP UNIT MOUNTED UP HIGH ON HANGAR WALL. PROVIDE SUSPENDED PLATFORM MOUNTED ON WALL WITH DRAIN PAIN.
5. ROUTE NEW REFRIGERANT LINES TO HEAT PUMP UNIT AS SHOWN.
6. PROVIDE NEW CONDENSATE PUMP FOR AIR HANDLER CONDENSATE. ROUTE CONDENSATE LINES TO EXTERIOR OF BUILDING IN MOST DIRECT PATH AND TERMINATE ON GRADE.

GRAPHIC SCALE: 1/2"=1'-0"
2' 0 1' 2' 4'

GRAPHIC SCALE: 1/4"=1'-0"
4' 0 2' 4' 8'

SYM	DESCRIPTION	DATE	APPR

NAVFAC

NORTH CAROLINA PROFESSIONAL SEAL 056500 ENGINEER LUCAS W. MERANDA 06-01-21
SEAL

CRENSHAW CONSULTING GROUP, PLLC
NC LICENSE #C-1558
3012 Gulf Drive, Suite 200
Raleigh, North Carolina 27603
919-571-1570 Fax 571-0009
A/E INFO

APPROVED
FOR COMMANDER NAVFAC
ACTIVITY
SATISFACTORY TO
DES LWM DRW LWM CHK JDL
PM/DM H. PERRY
BRANCH MANAGER P. FAULKNER
CHIEF ENG/ARCH
FIRE PROTECTION

DEPARTMENT OF THE NAVY
NAVAL FACILITIES ENGINEERING SYSTEMS COMMAND
NAVAL FACILITIES ENGINEERING SYSTEMS COMMAND ~ MIDATLANTIC
DESIGN AND CONSTRUCTION (DC) CORE
NAVAL STATION - NORFOLK, VA
MARINE CORPS AIR STATION
CHERRY POINT, NC

OVERHAUL ELEVATOR - BUILDING 4224

FLOOR PLAN - MECHANICAL

SCALE: AS INDICATED
EPROJECT NO.:
STA. PROJ. NO.: 7320479
NAVFAC DRAWING NO. 12908246
SHEET 21 OF 31

M-101

DRAWFORM REVISION: 25 AUGUST 2020

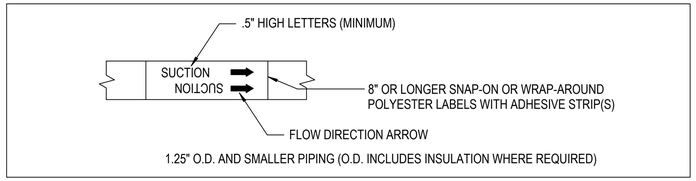

LABEL TEXT AND COLOR LEGEND		
PIPE SYSTEM DESCRIPTION	LETTER COLOR	BACKGROUND COLOR
REFRIGERANT SUCTION	WHITE	BROWN
REFRIGERANT LIQUID	WHITE	BROWN
CONDENSATE	WHITE	GREEN

C3 PIPE IDENTIFICATION
SCALE: NTS

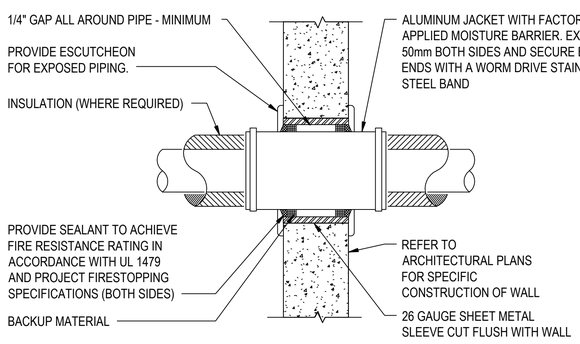

NOTES:
1. FOR GYB. BOARD WALLS PROVIDE MIN. 16 GAUGE GALV. STEEL SLEEVE WITH LOCK-TYPE LONGITUDINAL SEAM.

A1 PIPE WALL PENETRATION DETAIL
SCALE: NTS

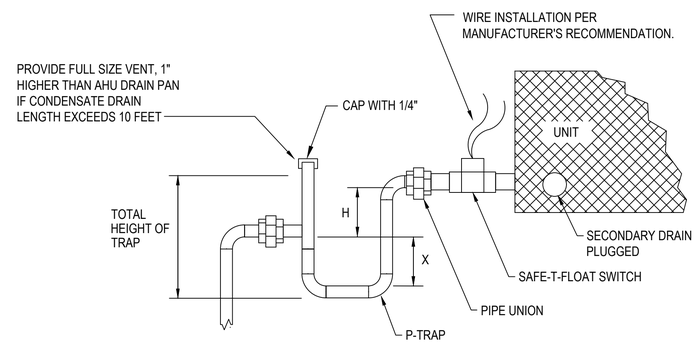

TOTAL HEIGHT OF TRAP = X+H+(1-1/2 x PIPE DIAMETER) (WITHOUT INSULATION)

DRAW THROUGH

X = 1/2 "H"

H = MIN. 1" PLUS CASING STATIC PRESSURE

A2 COIL DRAIN PIPING DETAIL
SCALE: NTS

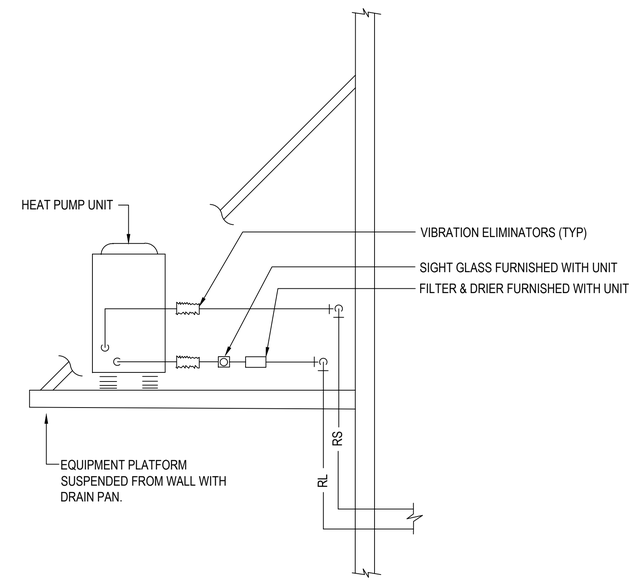

A4 REFRIGERANT PIPING DETAIL
SCALE: NTS

SYM	DESCRIPTION	DATE	APPR

NAVFAC

NORTH CAROLINA PROFESSIONAL ENGINEER SEAL 056500 LUCAS W. MERANDA 06-01-21

SEAL

CRENSHAW CONSULTING GROUP, P.C.
NC LICENSE #C-1555
www.crenshawconsulting.com
3616 North Ellington Avenue, Suite 200
Raleigh, North Carolina 27609
919-571-0070 Fax 571-0009

A/E INFO

APPROVED:

FOR COMMANDER NAVFAC

ACTIVITY

SATISFACTORY TO

DES LWM DRW LWM CHK JDL

PM/DM H. PERRY

BRANCH MANAGER P. FAULKNER

CHIEF ENG/ARCH

FIRE PROTECTION

DEPARTMENT OF THE NAVY
NAVAL FACILITIES ENGINEERING SYSTEMS COMMAND
DESIGN AND CONSTRUCTION (DC) CORE
NAVAL FACILITIES ENGINEERING SYSTEMS COMMAND ~ MIDATLANTIC
NAVAL STATION ~ NORFOLK, VA.
MARINE CORPS AIR STATION CHERRY POINT, NC

OVERHAUL ELEVATOR - BUILDING 4224

MECHANICAL DETAILS

SCALE: AS INDICATED

EPROJECT NO.:

STA. PROJ. NO.: 7320479

NAVFAC DRAWING NO. 12908247

SHEET 22 OF 31

M-501

DRAWFORM REVISION: 25 AUGUST 2020

DESIGN CONDITIONS

OUTDOOR DESIGN CONDITIONS	
SEASON	DB/WB (°F)
SUMMER	90.0 / 77.0 (1% ASHRAE)
WINTER	27.0 (99.0% ASHRAE)

DEHUMIDIFICATION CONDITIONS	
MCDB (°F)	W (grains H2O/lbm dry air)
85	131

INDOOR DESIGN CONDITIONS				
SPACE TYPE	SEASON	OCCUPIED	UNOCCUPIED	RELATIVE HUMIDITY
ELEVATOR MACHINE ROOM	COOLING	90°F (MAX)	-	35-60%
	HEATING	70°F (MIN)	-	35-60%
NOTE: INDOOR DESIGN CONDITIONS PER UFC 3-490-06 SECTION 5-1.1.				

DUCTLESS SPLIT SYSTEM AIR HANDLING UNIT SCHEDULE

MARK	SERVES	TYPE	CFM	COOLING CAPACITY (MBH)		SEER	HEATING CAPACITY (MBH)	HSPF	REFRIG. TYPE	REFRIG. PRECHARGE (LBS)	WEIGHT (LBS)	REMARKS
				TOTAL	SENSIBLE							
DAC-1	ELEV EQUIP 105	HP	385	12	9.72	20.8	18	10.2	R-410A	4.0	28	1,2,3

REMARKS:
1. PROVIDE UNIT WITH BACNET/MSTP INTERFACE COMPATIBILITY, WIRED WALL MOUNTED THERMOSTAT, AND CLEANABLE TYPE FILTERS.
2. PROVIDE UNIT WITH WALL MOUNTED CONDENSATE PUMP CAPABALE OF 10 GPH AT 20' HEAD, 1/30 HP, 120/1, 1.5 FLA, WIRED TO MOTOR RATED SWITCH.
3. AHU IS POWERED FROM HEAT PUMP UNIT. POWER AND CONTROL WIRING BETWEEN DAC AND DHP TO BE PROVIDED BY MECHANICAL CONTRACTOR.

DUCTLESS SPLIT SYSTEM HEAT PUMP UNIT SCHEDULE

MARK	SERVES	NOMINAL TONS	SEER	HPSF	VOLT/PH	MCA	MOCP	WEIGHT (LBS)	REMARKS
DHP-1	ELEV EQUIP 105	1	20.8	10.2	208/1	11	28	100	1

REMARKS:
1. PROVIDE WITH WALL SUSPENDED PLATFORM WITH DRAIN PAN. CONTROL WIRING BETWEEN DAC AND DHP UNITS PROVIDED BY MECHANICAL CONTRACTOR. POWER WIRING BETWEEN DAC AND DHP UNITS BY ELECTRICAL CONTRACTOR.

SYM	DESCRIPTION	DATE	APPR

NAVFAC

NORTH CAROLINA PROFESSIONAL SEAL 056500 ENGINEER LUCAS W. MERANDA 06-01-24

SEAL

CRENSHAW CONSULTING GROUP, INC.
NC LICENSE #C-1555
www.crenshawconsulting.com
3516 North Arrowood, Suite 200
Raleigh, North Carolina 27609
P:919-571-0070 Fax: 571-0009

A/E INFO

APPROVED

FOR COMMANDER NAVFAC

ACTIVITY

SATISFACTORY TO

DES LWM DRW LWM CHK JDL

PM/DM H. PERRY

BRANCH MANAGER P. FAULKNER

CHIEF ENG/ARCH

FIRE PROTECTION

DEPARTMENT OF THE NAVY
NAVAL FACILITIES ENGINEERING SYSTEMS COMMAND
DESIGN AND CONSTRUCTION (DC) CORE
NAVAL FACILITIES ENGINEERING SYSTEMS COMMAND ~ MIDATLANTIC
NAVAL STATION - NORFOLK, VA.
MARINE CORPS AIR STATION CHERRY POINT, NC

OVERHAUL ELEVATOR - BUILDING 4224

MECHANICAL SCHEDULES

SCALE: AS INDICATED

EPROJECT NO.:

STA. PROJ. NO.: 7320479

NAVFAC DRAWING NO. 12908248

SHEET 23 OF 31

M-601

DRAWFORM REVISION: 25 AUGUST 2020

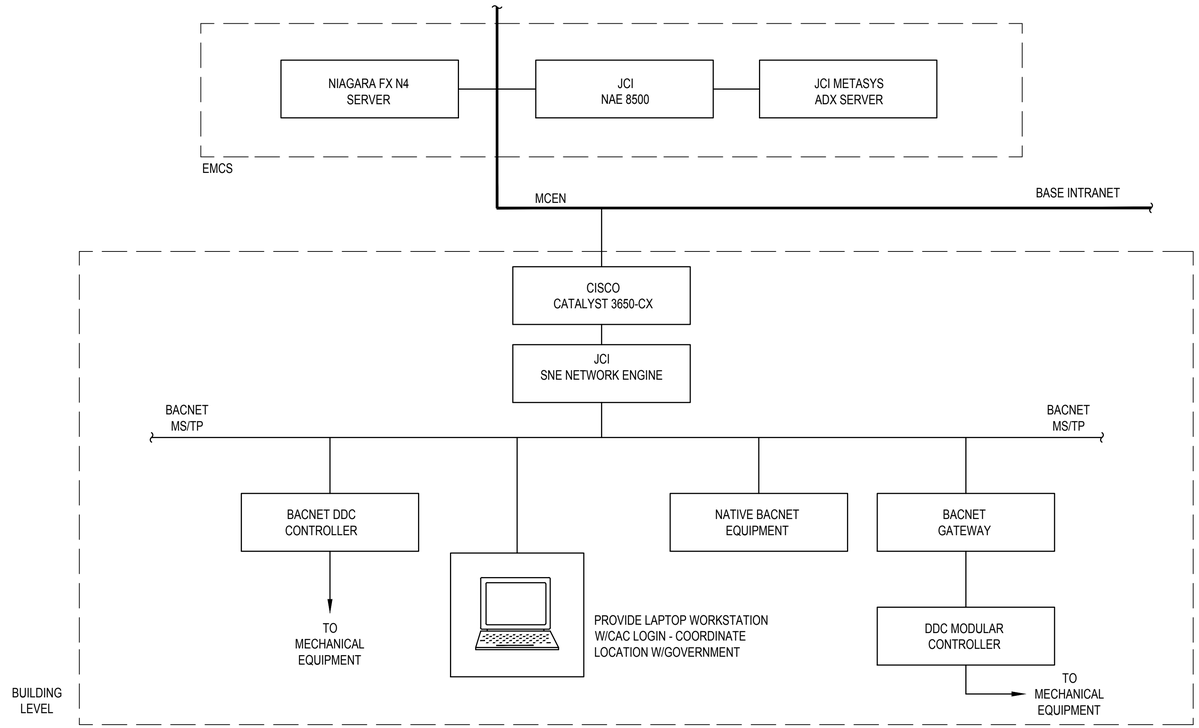

B1 DDC SYSTEM ARCHITECTURE

SCALE: NTS

CONTROLS LEGEND

SYMBOL	DESCRIPTION	SYMBOL	DESCRIPTION
M	MOTORIZED DAMPER	CO	CARBON DIOXIDE SENSOR
	DAMPER STATUS SWITCH	DP	DIFFERENTIAL PRESSURE
TS	TEMPERATURE SENSOR	ES	EMERGENCY SHUTOFF SWITCH
	TWIST TIMER OVERIDE	F	FREEZESTAT
	CURRENT SENSOR	FS	FLOW SWITCH
AI	DDC ANALOG INPUT POINT W/ ADJUSTABLE PID GAIN CONTROL	P	PRESSURE SENSOR
AO	DDC ANALOG OUTPUT POINT W/ ADJUSTABLE PID GAIN CONTROL	R	FIRE ALARM RELAY
DI	DDC DIGITAL INPUT POINT W/ INDICATING LIGHT ON DDC PANEL	RH	HUMIDITY SENSOR
DO	DDC DIGITAL OUTPUT POINT W/ MANUAL OVERRIDE AND INDICATING LIGHT ON DDC PANEL	T	TEMPERATURE SENSOR / THERMOSTAT / HUMIDISTAT
MPE	MOTOR, PROPORTIONAL ELECTRIC	VFD	VARIABLE FREQUENCY DRIVE
SD	DUCT SMOKE DETECTOR - COORDINATE WITH ELECTRICAL CONTRACTOR FOR POWER SUPPLY	ECM	ELECTRONICALLY COMMUTATED MOTOR
NOTE: LEGEND AND ABBREVIATIONS ARE ALL INCLUSIVE. SOME SYMBOLS OR ABBREVIATIONS SHOWN MAY NOT BE INCLUDED IN THE PROJECT.		CFM	CUBIC FEET PER MINUTE, AIRFLOW MEASURING STATION

SEQUENCE OF OPERATION

DAC-1 / DHP-1:

NORMAL MODE (DAC-1):
THE UNIT IS TO OPERATE 24/7, YEAR-ROUND ON ITS OWN INTERNAL FACTORY CONTROLS AND WILL RUN WITH AUTOMATIC SWITCHOVER BETWEEN HEATING AND COOLING MODES TO TO MAINTAIN ROOM STAT COOLING SETPOINT 80°F (ADJ) AND HEATING SETPOINT 72°F (ADJ).

SETPOINT ADJUST:
THE OCCUPANT MUST BE ABLE TO ADJUST THE UNIT TEMPERATURE HEATING AND COOLING SETPOINTS AT THE UNIT THERMOSTAT.

MONITORING:
THE FACTORY CONTROLLER MUST REPORT THE FOLLOWING TO THE EXISTING BAS:

- ZONE TEMPERAURE
- ZONE SETPOINT ADJUST
- COOLING ENABLE
- HEATING ENABLE

ALARMS ARE TO BE PROVIDED AS FOLLOWS:

- HIGH ZONE TEMP: IF THE ZONE TEMPERATURE IS GREATER THAN THE MAXIMUM INDOOR DESIGN CONDITIONS OF 90°F (ADJ).
- LOW ZONE TEMP: IF THE ZONE TEMPERATURE IS LESS THAN THE MINIMUM INDOOR DESIGN CONDITIONS OF 70°F (ADJ).

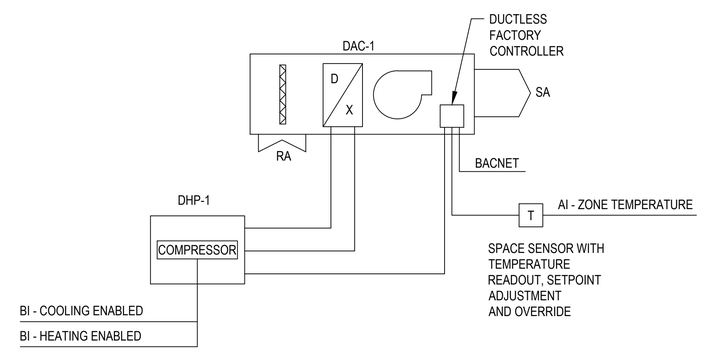

DAC-1 UNIT POINTS LIST

POINT NAME	HARDWARE				SOFTWARE				FAILURE MODE / ALARM SETPOINT	SHOW ON GRAPHICS
	AI	AO	BI	BO	AV	BV	TREND	ALARM		
ZONE HIGH TEMP ALARM								●		
ZONE LOW TEMP ALARM								●		
ZONE TEMP	●									●
ZONE SETPOINT ADJUST	●									
COOLING ENABLE			●							
HEATING ENABLE			●							
DUCTLESS SPLIT BACNET						●				

A2 DUCTLESS SPLIT SYSTEM CONTROL DETAIL

SCALE: NTS

APPR	
DATE	
DESCRIPTION	
SYM	

NAVFAC

NORTH CAROLINA PROFESSIONAL SEAL 056500 ENGINEER LUCAS W. MERANDA 06-01-21

SEAL

CRENSHAW CONSULTING GROUP, P.A.
NC LICENSE #C-1555
www.crenshawconsulting.com
8538 Brier Creek, Suite 205
Raleigh, North Carolina 27616
919-571-0070 Fax: 571-0009

A/E INFO

APPROVED

FOR COMMANDER NAVFAC
ACTIVITY

SATISFACTORY TO

DES LWM DRW LWM CHK JDL
PM/DM H. PERRY
BRANCH MANAGER P. FAULKNER
CHIEF ENG/ARCH
FIRE PROTECTION

NAVAL FACILITIES ENGINEERING SYSTEMS COMMAND
DEPARTMENT OF THE NAVY
NAVAL FACILITIES ENGINEERING SYSTEMS COMMAND ~ MIDATLANTIC
DESIGN AND CONSTRUCTION (DC) CORE
NAVAL STATION - NORFOLK, VA.
MARINE CORPS AIR STATION
CHERRY POINT, NC

OVERHAUL ELEVATOR - BUILDING 4224

MECHANICAL CONTROLS

SCALE: AS INDICATED
EPROJECT NO.:
STA. PROJ. NO.: 7320479
NAVFAC DRAWING NO. 12908249
SHEET 24 OF 31

M-701

DRAWFORM REVISION: 25 AUGUST 2020

GENERAL NOTES AND REQUIREMENTS.

1. WORKMANSHIP MUST CONFORM TO NECA PUBLICATION "STANDARDS OF INSTALLATION."
2. INSTALLATION MUST COMPLY WITH NATIONAL ELECTRICAL CODE, INTERNATIONAL BUILDING CODE, AND ALL REQUIREMENTS OF THE LOCAL INSPECTOR (FURNISH INSPECTION CERTIFICATE). ALL WORK MUST BE BY LICENSED ELECTRICAL CONTRACTOR.
3. THE CONTRACTOR MUST REFER TO THE ARCHITECTURAL PLANS FOR FLOOR PLAN DIMENSIONS. DO NOT SCALE THESE DRAWINGS.
4. THE CONTRACTOR MUST COORDINATE ANY AND ALL WORK WITH OTHER TRADES INVOLVED IN THE PROJECT, PRIOR TO INSTALLATION OF ELEC. EQUIPMENT, SO AS TO AVOID CONFLICTS DURING CONSTRUCTION AND TO ALLOW FOR OPTIMUM MAINTENANCE AND WORKING SPACE.
5. ALL BRANCH CIRCUITS MUST BE IN ZINC-COATED EMT OR RIGID CONDUIT AS PERMITTED OR REQUIRED BY THE NATIONAL ELECTRICAL CODE. SCHEDULE 40 PVC CONDUIT MAY BE USED ONLY FOR THE SECONDARY UNDERGROUND SERVICE, THE UNDERGROUND TELEPHONE SERVICE CONDUIT, AND BRANCH CIRCUIT TELEPHONE SYSTEM CONDUITS LOCATED BELOW THE FLOOR SLAB ON GRADE OR BURIED ON THE EXTERIOR OF THE BUILDING, OR IN CONCRETE BLOCK WALLS. ALL CONDUIT MUST BE 3/4" MINIMUM SIZE EMT FITTINGS MUST BE STEEL COMPRESSION TYPE.
6. ALL CONDUCTORS MUST BE COPPER TYPE THHN OR THWN, SOLID FOR #10 AWG OR #12 AWG, AND STRANDED FOR ALL LARGER SIZES. MINIMUM CONDUCTOR SIZE MUST BE #12.
7. ALL WIRE AND CONDUIT SIZES ARE BASED ON 75° C THHN WIRE UNLESS OTHERWISE NOTED. ALL TERMINATIONS & DEVICES MUST BE RATED FOR 75°C.
8. CONDUITS MAY BE RUN EXPOSED IN MECHANICAL AREAS. CONDUITS MUST BE RUN PARALLEL OR PERPENDICULAR TO STRUCTURAL ELEMENTS AND MUST BE RUN IN GROUPS. SEAL ALL PENETRATIONS AIR TIGHT AROUND ALL CONDUITS WHEN PASSING INTO MECHANICAL ROOMS.
9. ALL LIGHT FIXTURES MUST BE SUPPORTED INDEPENDENTLY OF THE SUSPENDED CEILING SYSTEM.
10. WHERE FIRST OUTLET ON BRANCH CIRCUIT IS GREATER THAN 65 FEET FROM THE PANELBOARD, SEE VOLTAGE DROP SCHEDULE.
11. ALL MOUNTING HEIGHTS ARE GIVEN TO THE BOTTOM OF THE DEVICE UNLESS NOTED OTHERWISE.
12. THE LOCATION OF ALL WALL MOUNTED DEVICES, INCLUDING MOUNTING HEIGHTS, MUST BE FIELD VERIFIED PRIOR TO INSTALLATION.
13. ALL FUSES, DISCONNECT SWITCHES, AND BREAKER SIZES, SHOWN FOR MECHANICAL EQUIPMENT, MUST BE VERIFIED BEFORE THE PURCHASE OR INSTALLATION OF SAID EQUIPMENT, WITH THE EQUIPMENT SUPPLIER AND THE CONTRACTOR.
14. ALL DISCONNECT SWITCHES MUST BE FUSIBLE TYPE. FUSE IN ACCORDANCE WITH NAMEPLATE DATA WITH DUAL ELEMENT TYPE FUSES.
15. THE CONTRACTOR MUST PROVIDE ALL NECESSARY DISCONNECTS, SWITCHES, AND RECEPTACLES UNDER THE BID AND MUST INCLUDE ALL NECESSARY CIRCUITS TO AND FINAL CONNECTIONS TO THE EQUIPMENT PROVIDED BY ALL SUPPLIERS, UNLESS NOTED OTHERWISE BY OTHER DISCIPLINES. COORDINATE CLOSELY.
16. ALL ELECTRICAL EQUIPMENT MUST BE INSTALLED SO THAT ALL CODE-REQUIRED AND MANUFACTURER-RECOMMENDED SERVICING CLEARANCES ARE MAINTAINED. INSTALLATIONS MUST FULLY COMPLY WITH NEC 110.26 AND NEC 408.18 FOR CLEARANCE REQUIREMENTS.
17. COORDINATE LOCATIONS OF ALL LIGHT FIXTURES WITH THE REFLECTED CEILING PLANS. LIGHT FIXTURES INSTALLED IN MECHANICAL AREAS MUST AVOID MECHANICAL PIPING, EQUIPMENT, DUCTWORK, ETC.
18. PROVIDE GROUNDING CONDUCTOR FOR ALL CIRCUITS PER N.E.C. AND BUILDING GROUND MUST MEET ALL REQUIREMENTS OF NEC 250.
19. THE CONTRACTOR MUST PATCH ANY WALL, CEILING, OR FLOOR OPENINGS AND PENETRATIONS RESULTING FROM DEMOLITION OR NEW WORK IN EXISTING AREAS.
20. ALL MULTIWIRE BRANCH CIRCUITS MUST HAVE MULTIPOLE BREAKERS PER NEC 210.4(B).
21. ALL CIRCUITS MUST BE TESTED WITH 600 VOLT TESTER PRIOR TO ENERGIZING.
22. PROVIDE PULL STRING IN ALL EMPTY CONDUIT FOR FUTURE SYSTEMS.
23. CONDUIT MUST BE LABELED EVERY TEN FEET.
24. THE CONTRACTOR IS RESPONSIBLE FOR PROPERLY DISPOSING OF ALL WASTE MATERIALS, DEMO MATERIALS AND OTHER TRASH. THIS INCLUDES BUT IS NOT LIMITED TO PROPER DISPOSAL OF MERCURY CONTAINING LAMPS, RECYCLABLE MATERIALS ETC.
25. IT IS THE SOLE RESPONSIBILITY OF THE CONTRACTOR TO COORDINATE W/ ALL OTHER TRADES REGARDING VOLTAGES, LOADS, CIRCUIT BREAKERS, ETC. PRIOR TO BEGINNING ANY WORK.
26. AS USED ON THESE DOCUMENTS, THE WORD "PROVIDE" MUST MEAN TO FURNISH AND INSTALL THE ITEM OR EQUIPMENT AND MAKE THE FINAL CONNECTION COMPLETE.
27. CONTRACTOR IS RESPONSIBLE TO COMPLY WITH ALL REQUIREMENTS OF THE INTERNATIONAL BUILDING CODE, ACCESSIBILITY CODE WHICH ARE APPLICABLE TO THIS PROJECT REGARDLESS OF WHETHER ALL DETAILS ARE INDICATED ON PLANS.
28. IT IS NOTED THAT IF TELEPHONE SERVICE IS NOT LOCATED WITHIN 20' OF ELECTRICAL SERVICE, THEN PROVIDE SEPARATE GROUNDING ELECTRODE PER NEC 800.

ELECTRICAL LEGEND

PLANS

SYMBOLS SHOWN BELOW ARE TO INDICATE NEW DEVICES OR NEW LOCATIONS OF EXISTING DEVICES. SEE LINETYPE LEGEND FOR DISTINCTION OF EXISTING DEVICES TO REMAIN AND DEMOLITION DEVICES.

HOME RUN TO PANEL INCLUDING GROUND

BRANCH CIRCUIT — MINIMUM SIZE PER CKT BKR

$ SINGLE POLE WALL SWITCH
$3 3-WAY WALL SWITCH
$4 4-WAY WALL SWITCH
$D SLIDE TYPE DIMMER SWITCH APPROPRIATE FOR LOAD SERVED
— 44" A.F.F. TO BOTTOM UNLESS OTHERWISE NOTED
$S SEE MOTION SENSOR LEGEND FOR THIS AND OTHER SWITCH TYPES.
$SD SEE MOTION SENSOR LEGEND FOR THIS AND OTHER SWITCH TYPES.
S2 (S) SEE MOTION SENSOR LEGEND.
S4 (S) SEE MOTION SENSOR LEGEND.

ALL DUPLEX AND QUAD RECEPTACLES MUST BE NEMA 5-20R UNO.

DUPLEX RECEPTACLE
ISOLATED GROUND DUPLEX
POWER RECEPTACLE
QUAD RECEPTACLE
— 16" A.F.F. TO BOTTOM UNLESS OTHERWISE NOTED

DISCONNECT SWITCH - FUSIBLE

$M MOTOR SWITCH

TELECOMMUNICATIONS OUTLET - DOUBLE GANG JUNCTION BOX WITH 1" CONDUIT TO EXISTING CABLE TRAY OR HOMERUN TO TELECOMMUNICATIONS RACK. PROVIDE (2) CAT6 CABLES FOR DATA. PROVIDE GREEN FOR DATA.

JUNCTION BOX

ELECTRICAL TRANSFORMER

ELECTRICAL PANEL

OVERHEAD FIXTURE OR AS NOTED. SEE FIXTURE SCHEDULE

DOWNLIGHT / PENDANT STYLE. SEE FIXTURE SCHEDULE.

EXIT SIGN, FACES AND ARROWS AS INDICATED. SEE FIXTURE SCHEDULE.

EMERGENCY FIXTURE. SEE FIXTURE SCHEDULE.

SLASHES OR HALF SHADING INDICATE FIXTURES CONNECTED AHEAD OF ALL SWITCHING TO OPERATE AS NIGHT LIGHTS (FIXTURES WILL BE ON 24/7)

DETAILS

A — ELECTRICAL PANEL OR AS NOTED

C.T. — C.T. CABINET

M — METER BASE AND METER

200/3 — FRAME SIZE
200A — FUSE SIZE
FUSIBLE DISCONNECT, FRAME AND FUSE SIZE AS INDICATED.

T_ — DESIGNATION
112.5 — KVA RATING
TRANSFORMER, SIZE AND DESIGNATION AS NOTED. PRIMARY VOLTAGE AS NOTED FOR PRIMARY FEED. SECONDARY VOLTAGE AS NOTED FOR LOAD SUPPLIED.

20/4 — CONTACTOR, AMPACITY / POLES AS INDICATED

T.C. — TIMECLOCK

SPD — SURGE PROTECTIVE DEVICE

SERVICE GROUND

LINETYPES

NEW DEVICE OR RELOCATED EXISTING DEVICE.
EXISTING DEVICE TO REMAIN.
EXISTING DEVICE BEING REMOVED OR RELOCATED.
NEW UNDERGROUND OR UNDERSLAB CONNECTION. EXISTING AND DEMO UNDERGROUND IS NOTED WITH EXISTING OR DEMO LINETYPE. NEW CONNECTIONS NOT SPECIFICALLY SHOWN WITH UNDERGROUND LINETYPE ARE NOT NECESSARILY RUN OVERHEAD UNLESS NOTED AS SUCH.
NEW LIGHTING CIRCUITRY TO INDICATE UNSWITCHED PORTIONS OF CIRCUITS.

SEE WALL RATING LEGEND FOR WALL TYPES AND SYMBOLS.

VOLTAGE DROP SCHEDULE

120 VOLT BRANCH CIRCUITS UP TO 8 AMPS (<1.0 KVA)

RUN DISTANCE IN FEET	WIRE SIZE AWG
1' - 120'	#12
121' - 190'	#10
191' - 300'	#8
301' - 470'	#6

120 VOLT BRANCH CIRCUITS 9 AMPS TO 14 AMPS (1-1.7 KVA)

RUN DISTANCE IN FEET	WIRE SIZE AWG
1' - 65'	#12
66' - 110'	#10
111' - 170'	#8
171' - 270'	#6

277 VOLT BRANCH CIRCUITS UP TO 14 AMPS (<3.9 KVA)

RUN DISTANCE IN FEET	WIRE SIZE AWG
1' - 160'	#12
161' - 250'	#10
251' - 390'	#8
391' - 620'	#6

WIRE SIZES INDICATED IN GENERAL NOTES AND CONNECTIONS SCHEDULES ARE MINIMUM WIRE SIZES. CONTRACTOR MUST UPSIZE WIRES BASED ON LOAD AND LENGTH OF RUN AS INDICATED IN SCHEDULE ABOVE.

ELECTRICAL ABBREVIATIONS

A	INDICATES A DEVICE IS MOUNTED WITH BOTTOM OF BOX 1 1/2" ABOVE BACKSPLASH UNLESS NOTED OTHERWISE.
AFF	ABOVE FINISHED FLOOR
AG	COMBINATION OF 'A' AND 'G'
ARCH	ARCHITECT
C	INDICATES A DEVICE IS FLUSH MOUNTED IN CEILING TILE.
EX.	EXISTING
EXT.	EXTERIOR
FAH	FAHRENHEIT
FURN	FURNITURE
G	INDICATES A DEVICE WITH INTEGRAL GROUND FAULT INTERRUPTER (GFI) PROTECTION.
GFI	SAME AS 'G'
IG	DEVICE MUST HAVE ISOLATED GROUND AND WILL REQUIRE ISOLATED GROUND CIRCUITRY.
J.B.	JUNCTION BOX
NTS	NOT TO SCALE
OC	ON CENTER
PROV	PROVIDED BY
S	INDICATES DEVICE IS SURFACE MOUNTED.
W/	WITH
WP	INDICATES A DEVICE THAT IS WEATHER-PROOF AND RATED FOR EXTERIOR TEMPERATURES.
MDP	MAIN DISTRIBUTION PANEL

SYM	DESCRIPTION	DATE	APPR

NAVFAC

SEAL

CRENSHAW CONSULTING
NC LICENSE #C-1958
www.crenshawconsulting.com
808 South Saunders, Suite 202
Raleigh, North Carolina 27603
919-571-0370 Fax 571-0409
A/E INFO

APPROVED

FOR COMMANDER NAVFAC

ACTIVITY

SATISFACTORY TO

DES JTR | DRW MKW | CHK JTR

PM/DM H. PERRY

BRANCH MANAGER P. FAULKNER

CHIEF ENG/ARCH

FIRE PROTECTION

DEPARTMENT OF THE NAVY
NAVAL FACILITIES ENGINEERING SYSTEMS COMMAND
DESIGN AND CONSTRUCTION (DC) CODE
MARINE CORPS AIR STATION

NAVAL FACILITIES ENGINEERING SYSTEMS COMMAND ~ MIDATLANTIC
NAVAL STATION ~ NORFOLK, VA.
CHERRY POINT, NC

OVERHAUL ELEVATOR - BUILDING 4224

ELECTRICAL NOTES & LEGEND

SCALE: AS INDICATED

EPROJECT NO.:

STA. PROJ. NO.: 7320479

NAVFAC DRAWING NO. 12908250

SHEET 25 OF 31

E-001

DRAWFORM REVISION: 25 AUGUST 2020

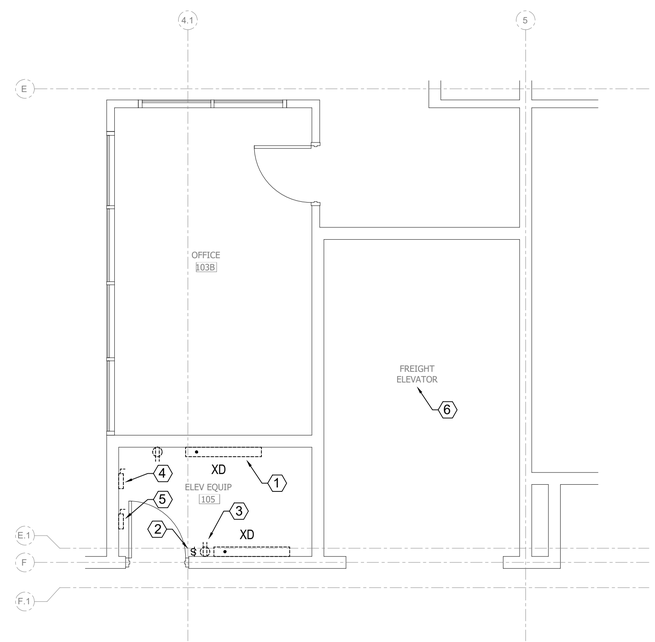

A3 FIRST FLOOR PLAN - ELECTRICAL DEMOLITION

SCALE: 1/4"=1'-0"

N

GRAPHIC SCALE: 1/4"=1'-0"

4' 0 2' 4' 8'

GENERAL SHEET NOTES

1. UPDATE PANEL SCHEDULE DIRECTORIES FOR ALL PANELS AFFECTED BY DEMOLITION.
2. ALL BREAKERS NOT BEING USED MUST BE SWITCHED TO THE OFF POSITION AND LABELED AS SPARE.
3. ANY HOLES CREATED DUE TO DEMOLITION OF ELECTRICAL DEVICES SHALL BE APPROPRIATELY PATCHED.
4. CIRCUITS BROKEN DURING DEMOLITION MUST BE RECONNECTED WHEN REQUIRED TO STAY IN SERVICE FOR EXISTING DEVICES TO REMAIN. WHERE THE REMOVAL OF A DEVICE WILL RENDER A PORTION OF A BRANCH CIRCUIT (BUT NOT THE WHOLE CIRCUIT) UNNECESSARY, THE UNNECESSARY PORTION OF THE CIRCUIT (CONDUCTORS AND CONDUIT) MUST BE REMOVED. WHERE THE ENTIRE BRANCH CIRCUIT IS DEMOLISHED, THE ENTIRE BRANCH CIRCUIT (CONDUIT AND CONDUCTORS) MUST BE REMOVED.

NEW WORK KEYNOTES

1. REMOVE EXISTING LIGHT FIXTURE, CONDUCTORS, AND CONDUIT COMPLETE BACK TO POWER SOURCE. TYPICAL.
2. REMOVE EXISTING SWITCH, FACE PLATE, CONDUCTORS, AND CONDUIT COMPLETE BACK TO POWER SOURCE. TYPICAL.
3. REMOVE EXISTING RECEPTACLE, FACE PLATE, CONDUCTORS, AND CONDUIT COMPLETE BACK TO POWER SOURCE. TYPICAL UNLESS OTHERWISE NOTED.
4. REMOVE EXISTING DISCONNECT, CONDUCTORS, AND CONDUIT COMPLETE BACK TO POWER SOURCE, PANEL 'PP2'. SEE SHEET E-101 FOR PANEL LOCATION.
5. REMOVE EXISTING DISCONNECT, CONDUCTORS, AND CONDUIT COMPLETE BACK TO POWER SOURCE, PANEL 'RP2'. SEE SHEET E-101 FOR PANEL LOCATION.
6. REMOVE ALL ELEVATOR PIT LIGHTING, RECEPTACLES, CONDUCTORS, AND CONDUIT COMPLETE BACK TO POWER SOURCE.

SYM	DESCRIPTION	DATE	APPR

NAVFAC

NORTH CAROLINA PROFESSIONAL ENGINEER SEAL 34954 JEFFREY T. DOSTMAN

SEAL

CRENSHAW CONSULTING
NC LICENSE #C-1568
www.crenshawconsulting.com
8520 Brier Creek, Suite 205
Raleigh, North Carolina 27609
919-571-0070 Fax 571-0009

A/E INFO

APPROVED

FOR COMMANDER NAVFAC

ACTIVITY

SATISFACTORY TO

DES JTR | DRW MKW | CHK JTR

PM/DM H. PERRY

BRANCH MANAGER P. FAULKNER

CHIEF ENG/ARCH

FIRE PROTECTION

DEPARTMENT OF THE NAVY
NAVAL FACILITIES ENGINEERING SYSTEMS COMMAND
DESIGN AND CONSTRUCTION (DC) CORE
NAVAL FACILITIES ENGINEERING SYSTEMS COMMAND – MIDATLANTIC
NAVAL STATION - NORFOLK, VA
MARINE CORPS AIR STATION CHERRY POINT, NC

OVERHAUL ELEVATOR - BUILDING 4224

FLOOR PLAN - ELECTRICAL DEMOLITION

SCALE: AS INDICATED

EPROJECT NO.:

STA. PROJ. NO.: 7320479

NAVFAC DRAWING NO. 12908251

SHEET 26 OF 31

ED101

DRAWFORM REVISION: 25 AUGUST 2020

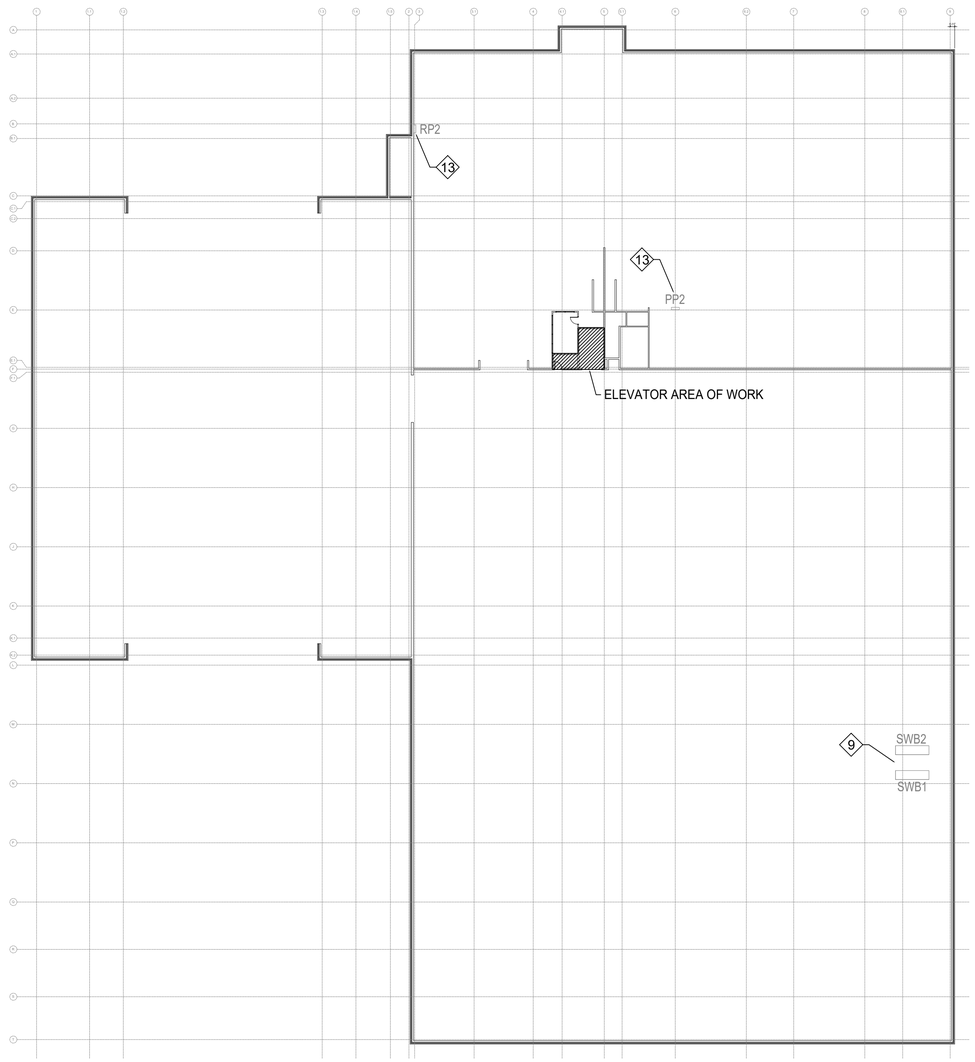

A1 FIRST FLOOR PLAN - ELECTRICAL
SCALE: 1/32"=1'-0"

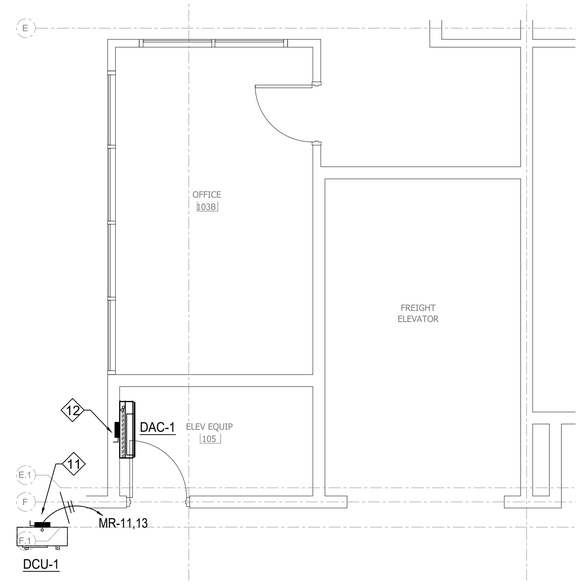

C3 FIRST FLOOR PLAN - EQUIPMENT CONNECTIONS
SCALE: 1/4"=1'-0"

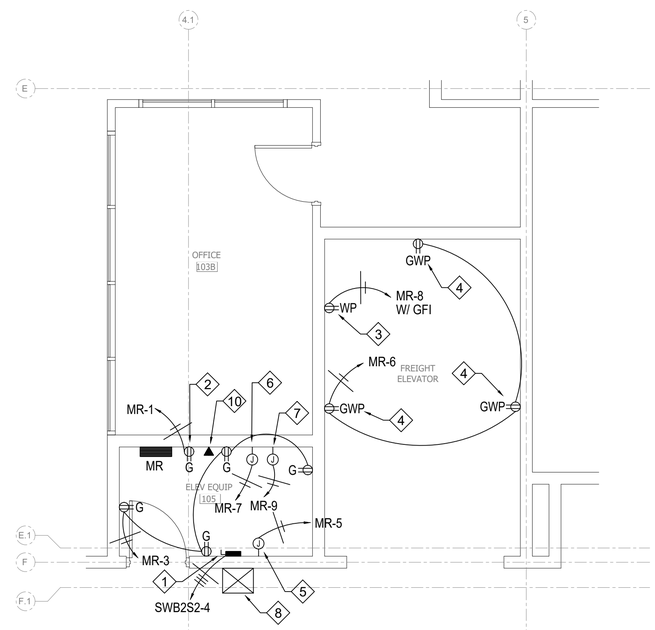

A3 FIRST FLOOR PLAN - POWER
SCALE: 1/4"=1'-0"

GENERAL SHEET NOTES

1. SEE SHEET E-001 FOR GENERAL NOTES, LEGEND, AND ABBREVIATIONS.
2. ALL ELECTRICAL ENCLOSURES LOCATED LESS THAN 4 FEET ABOVE THE PIT FLOOR MUST BE NEMA 4X RATED.

NEW WORK KEYNOTES

1. PROVIDE DISCONNECT SWITCH FOR ELEVATOR CONTROLLER. PROVIDE WITH MICROSWITCH AND AUXILIARY CONTACTORS FOR EMERGENCY RETURN UNIT. COORDINATE EXACT LOCATION AND REQUIREMENTS WITH EQUIPMENT SUPPLIER PRIOR TO BEGINNING WORK. PROVIDE LABELING FOR DISCONNECT SWITCH PER NEC 620.52. DISCONNECT MUST HAVE SHUNT TRIP CAPABILITY DESIGNED TO BE OPERATED BY THE ACTUATION OF THE SPRINKELR FLOW SWITCH TO AUTOMATICALLY OPEN THE POWER SUPPLY TO THE ELEVATOR. DISCONNECT MUST INCLUDE SAFETY SWITCH TYPE HANDLE FOR MANUAL OPERATION AND MUST BE CAPABLE OF BEING LOCKED IN THE OPEN POSITION ONLY.
2. RECEPTACLE FOR SUMP PUMP CONTROL POWER.
3. PROVIDE SIMPLEX RECEPTACLE MOUNTED AT 5 FEET ABOVE PIT FLOOR. RECEPTACLE MUST INCLUDE LED INDICATOR LIGHT TO VERIFY ENERGIZED CIRCUIT.
4. MOUNT RECEPTACLE AT 3 FEET ABOVE PIT FLOOR.
5. JUNCTION BOX FOR ELEVATOR CAB LIGHTS AND RECEPTACLES. COORDINATE EXACT LOCATION AND REQUIREMENTS WITH EQUIPMENT SUPPLIER PRIOR TO BEGINNING WORK. PROVIDE LABELING PER NEC 620.52. DISCONNECTING MEANS IS CIRCUIT BREAKER IN PANEL 'MR' WITHIN THIS ROOM. BREAKER MUST BE CAPABLE OF BEING LOCKED IN THE OPEN POSITION ONLY.
6. JUNCTION BOX FOR ELEVATOR OIL COOLER. COORDINATE EXACT LOCATION AND REQUIREMENTS WITH EQUIPMENT SUPPLIER PRIOR TO BEGINNING WORK. PROVIDE LABELING PER NEC 620.52. DISCONNECTING MEANS IS CIRCUIT BREAKER IN PANEL 'MR' WITHIN THIS ROOM. BREAKER MUST BE CAPABLE OF BEING LOCKED IN THE OPEN POSITION ONLY.
7. JUNCTION BOX FOR ELEVATOR OIL HEATER. COORDINATE EXACT LOCATION AND REQUIREMENTS WITH EQUIPMENT SUPPLIER PRIOR TO BEGINNING WORK. PROVIDE LABELING PER NEC 620.52. DISCONNECTING MEANS IS CIRCUIT BREAKER IN PANEL 'MR' WITHIN THIS ROOM. BREAKER MUST BE CAPABLE OF BEING LOCKED IN THE OPEN POSITION ONLY.
8. MOUNT TRANSFORMER UP HIGH ON WALL IN HIGH BAY. SEE RISER DIAGRAM FOR MORE INFORMATION.
9. EXISTING ELECTRICAL SERVICE SWITCHBOARDS TO REMAIN.
10. DATA OUTLET FOR ELEVATOR EQUIPMENT. COORDINATE EXACT LOCATION AND REQUIREMENTS WITH EQUIPMENT SUPPLIER.
11. CONNECT DUCTLESS SPLIT CONDENSING UNIT. AHU IS POWERED BY CONDENSING UNIT. PROVIDE DISCONNECT, WIRING, AND CONDUIT COMPLETE.
12. CONNECT DUCTLESS SPLIT AIR HANDLER. AHU IS POWERED BY CONDENSING UNIT. PROVIDE DISCONNECT, WIRING, AND CONDUIT COMPLETE.
13. EXISTING ELECTRICAL PANEL TO REMAIN.

GRAPHIC SCALE: 1/4"=1'-0"
4' 0 2' 4' 8'

GRAPHIC SCALE: 1/32"=1'-0"
32' 0 16' 32' 64'

SYM	DESCRIPTION	DATE	APPR

NAVFAC

NORTH CAROLINA PROFESSIONAL ENGINEER 34954 JEFFERY BOSMAN

SEAL

CRENSHAW CONSULTING
NC LICENSE: P-1500
www.crenshawconsulting.com
3600 North Harvey, Suite 200
Raleigh, North Carolina 27609
919-571-9270 Fax: 571-9009

A/E INFO

APPROVED

FOR COMMANDER NAVFAC

ACTIVITY

SATISFACTORY TO

DES JTR | DRW MKW | CHK JTR

PM/DM H. PERRY

BRANCH MANAGER P. FAULKNER

CHIEF ENG/ARCH

FIRE PROTECTION

DEPARTMENT OF THE NAVY
NAVAL FACILITIES ENGINEERING SYSTEMS COMMAND
DESIGN AND CONSTRUCTION (DC) CORE
NAVAL FACILITIES ENGINEERING SYSTEMS COMMAND ~ MIDATLANTIC
NAVAL STATION ~ NORFOLK, VA.
MARINE CORPS AIR STATION CHERRY POINT, NC

OVERHAUL ELEVATOR - BUILDING 4224

FLOOR PLAN - POWER

SCALE: AS INDICATED

EPROJECT NO.:

STA. PROJ. NO.: 7320479

NAVFAC DRAWING NO. 12908252

SHEET 27 OF 31

E-101

DRAW/FORM REVISION: 25 AUGUST 2020

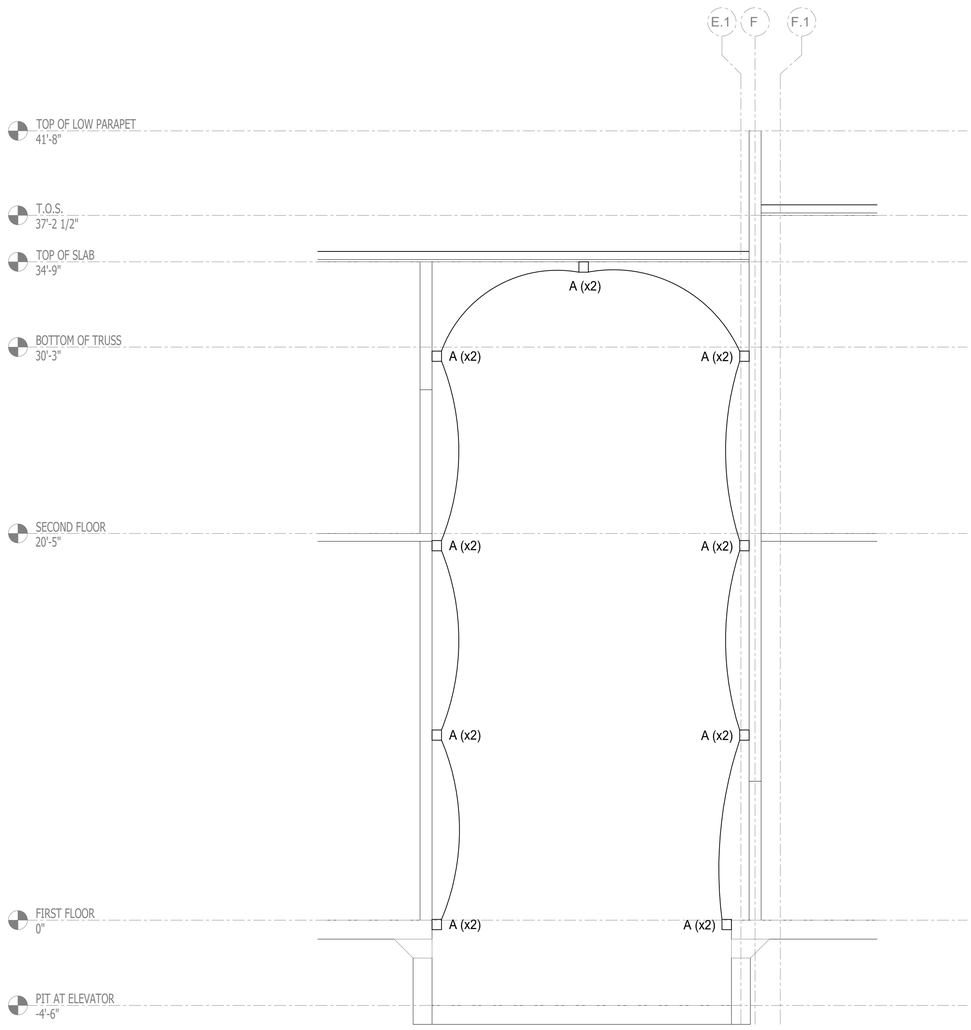

A1 SECTION PLAN - LIGHTING
SCALE: 1/4"=1'-0"

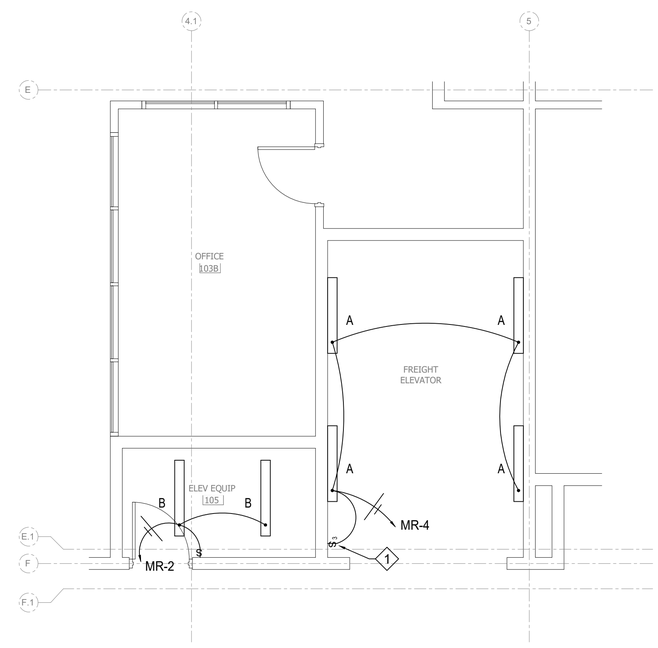

A3 FIRST FLOOR PLAN - LIGHTING
SCALE: 1/4"=1'-0"

GENERAL SHEET NOTES

1. SEE SHEET E-001 FOR GENERAL NOTES, LEGEND, AND ABBREVIATIONS.

NEW WORK KEYNOTES

1. PROVIDE 3-WAY SWITCHES FOR HOISTWAY/PIT LIGHTING AT TOP AND BOTTOM HOISTWAY LANDING.

GRAPHIC SCALE: 1/4"=1'-0"
4' 0 2' 4' 8'

SYM	DESCRIPTION	DATE	APPR

NAVFAC

NORTH CAROLINA PROFESSIONAL ENGINEER SEAL 34954 JEFFREY T. ROSMAN

SEAL

CRENSHAW CONSULTING
NC LICENSE #C-1555
5810 South Sprung, Suite 205
Raleigh, North Carolina 27609
919-571-0070 Fax 571-0089

A/E INFO

APPROVED

FOR COMMANDER NAVFAC

ACTIVITY

SATISFACTORY TO

DES JTR | DRW MKW | CHK JTR

PM/DM H. PERRY

BRANCH MANAGER P. FAULKNER

CHIEF ENG/ARCH

FIRE PROTECTION

DEPARTMENT OF THE NAVY
NAVAL FACILITIES ENGINEERING SYSTEMS COMMAND
DESIGN AND CONSTRUCTION (DC) CORE
NAVAL FACILITIES ENGINEERING SYSTEMS COMMAND ~ MIDATLANTIC
NAVAL STATION - NORFOLK, VA.
MARINE CORPS AIR STATION CHERRY POINT, NC

OVERHAUL ELEVATOR - BUILDING 4224

FLOOR PLAN - LIGHTING

SCALE: AS INDICATED

EPROJECT NO.:

STA. PROJ. NO.: 7320479

NAVFAC DRAWING NO. 12908253

SHEET 28 OF 31

E-102

DRAWFORM REVISION: 25 AUGUST 2020

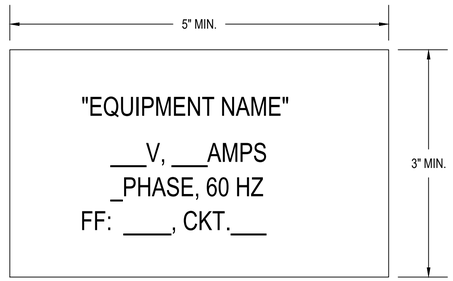

PLACARD MUST BE HARD PLASTIC WITH BLACK LETTERING ENGRAVED ON A WHITE BACKGROUND AND ATTACHED WITH RIVETS TO THE ENCLOSURE COVER IN PLAIN VIEW

C1 DISCONNECT IDENTIFICATION PLACARD

SCALE: NTS

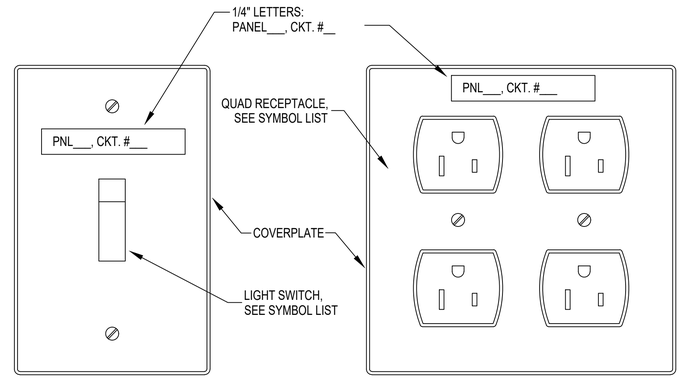

C3 COVERPLATE LABELING DETAIL

SCALE: NTS

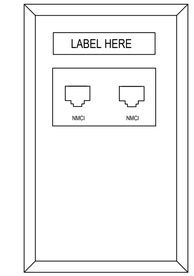

GREEN JACK FOR DATA

C5 TYPICAL DATA OUTLET

SCALE: NTS

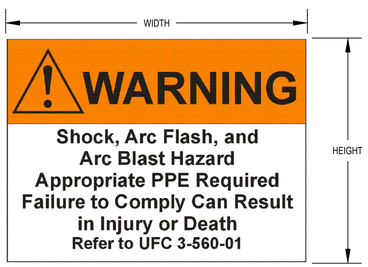

NOTES:

1. PROVIDE SELF-ADHESIVE VINYL LABEL TO AFFIX TO ELECTRICAL EQUIPMENT TO WARN OF ARC FLASH HAZARDS.
2. THE LABEL FORMAT AND TEXT MUST BE IN ACCORDANCE WITH THE FIGURE.
3. THE LABEL MUST BE LOCATED ON THE EQUIPMENT TO BE CLEARLY VISIBLE TO QUALIFIED PERSONS BEFORE EXAMINATION, ADJUSTMENT, SERVICING, OR MAINTENANCE OF THE EQUIPMENT.
4. THE SIZE OF THE LABEL MUST BE MINIMUM:

EQUIPMENT TYPE	HEIGHT	WIDTH
INDOOR	2"	3"
OUTDOOR	3"	4.5"

5. A DOWNLOADABLE WINDOWS METAFILE IS AVAILABLE ON THE WHOLE BUILDING DESIGN GUIDE WEBSITE (WWW.WBDG.ORG) FOR USE IN A LABEL MAKING MACHINE.
   A. THE FILE IS LOCATED ON THE "NAVFAC CADD DETAILS" PAGE. TO NAVIGATE TO THIS LOCATION, FOLLOW: HOME > DOCUMENTS & REFERENCES > CCB > CADD LIBRARY > NAVFAC CADD RESOURCES > NAVFAC CADD DETAILS.
   B. ALTERNATIVELY, TYPE IN THE FOLLOWING ADDRESS IN INTERNET EXPLORER: HTTP://WWW.WBDG.ORG/CCB/BROWSE_CAT.PHP?C=232

GENERAL ARC FLASH WARNING LABEL

SKETCH DATE	APRIL 2015	STYLE	AF-1

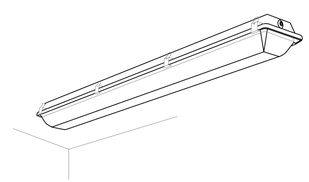

NOTE: THIS SKETCH IS A NON-PROPRIETARY GRAPHIC REPRESENTATION OF A LUMINAIRE THAT MAY MEET THE SPECIFICATION REQUIREMENTS. IT IS NOT INTENDED TO INDICATE A CERTAIN MANUFACTURER OR PREFERENCE.

LUMINAIRE REQUIREMENTS:

1. HOUSING - HIGH-IMPACT RESISTANT, FULLY GASKETED HOUSING CONSTRUCTED OF STAINLESS STEEL OR HEAVY-DUTY DIE CAST ALUMINUM. SIZE AS INDICATED IN LUMINAIRE SCHEDULE.
2. OPTICS - UV-STABILIZED, HIGH-IMPACT, FROSTED POLYCARBONATE OR GLASS LENS.
3. LIGHT SOURCE - SOLID STATE LEDS, 4000K CCT UON, MINIMUM 80 CRI UON, AND MINIMUM EFFICACY OF 90 LUMENS/WATT UON. INITIAL LUMEN OUTPUT AS INDICATED IN LUMINAIRE SCHEDULE.
4. DRIVER - REPLACEABLE, INTEGRAL, HIGH-EFFICIENCY DIMMABLE DRIVER WITH MINIMUM 0.9 PF, OPERATING VOLTAGE OF 120-277V, THERMAL MANAGEMENT, AND < 20% THD. ON/OFF CONTROL AND FULLY DIMMABLE DOWN TO 10% MINIMUM OR AS INDICATED IN LUMINAIRE SCHEDULE.
5. CERTIFICATION - UL LISTED FOR WET LOCATION, ROHS COMPLIANT. DLC QUALIFIED. COMPLIES WITH IES LM79, LM80 AND TM21 TESTING STANDARDS. MEETS UL844 REQUIREMENTS FOR CLASS 1 DIVISION 2 HAZARDOUS LOCATIONS.
6. MOUNTING - CEILING OR WALL SURFACE-MOUNTED.
7. OPTIONS - INTEGRAL OCCUPANCY SENSOR, EMERGENCY BATTERY BACK-UP.

LED HAZARDOUS LOCATION LIGHT

REVISED:	NOVEMBER 2020	LIGHTING PLATE:	NL-22

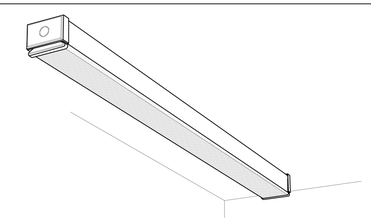

NOTE: THIS SKETCH IS A NON-PROPRIETARY GRAPHIC REPRESENTATION OF A LUMINAIRE THAT MAY MEET THE SPECIFICATION REQUIREMENTS. IT IS NOT INTENDED TO INDICATE A CERTAIN MANUFACTURER OR PREFERENCE.

LUMINAIRE REQUIREMENTS:

1. HOUSING - EXTRUDED ALUMINUM OR WELDED STEEL HOUSING WITH SNAP-ON END CAPS. SIZE AS INDICATED IN LUMINAIRE SCHEDULE.
2. OPTICS - DIFFUSE ACRYLIC LENS.
3. LIGHT SOURCE - SOLID STATE LEDS, 3500K CCT UON, MINIMUM 80 CRI UON, AND MINIMUM EFFICACY OF 90 LUMENS/WATT UON. INITIAL LUMEN OUTPUT AS INDICATED IN LUMINAIRE SCHEDULE.
4. DRIVER - REPLACEABLE, INTEGRAL, HIGH-EFFICIENCY DIMMABLE DRIVER WITH MINIMUM 0.9 PF, OPERATING VOLTAGE OF 120-277V, THERMAL MANAGEMENT, AND < 20% THD. ON/OFF CONTROL AND FULLY DIMMABLE DOWN TO 10% MINIMUM OR AS INDICATED IN LUMINAIRE SCHEDULE.
5. CERTIFICATION - UL LISTED FOR DAMP OR WET LOCATION, ROHS COMPLIANT. DLC QUALIFIED. COMPLIES WITH IES LM79, LM80 AND TM21 TESTING STANDARDS.
6. MOUNTING - PENDANT, STEM, OR SURFACE MOUNTED WITH STAINLESS STEEL MOUNTING HARDWARE.
7. OPTIONS - INTEGRAL OCCUPANCY SENSOR, EMERGENCY BATTERY BACK-UP, VARIOUS PROFILE DIMENSIONS AND RUN LENGTHS, AND VARIOUS CLEAR OR FROSTED POLYCARBONATE LENSES.

LED INDUSTRIAL LIGHT

REVISED:	NOVEMBER 2020	LIGHTING PLATE:	NL-23

SYM	DESCRIPTION	DATE	APPR

NAVFAC

SEAL

CRENSHAW CONSULTING GROUP, INC.
NC LICENSE #C-1558
www.crenshawconsulting.com
3016 Bush Street, Suite 200
Raleigh, North Carolina 27609
919-571-0370 Fax 571-0609

A/E INFO

APPROVED

FOR COMMANDER NAVFAC

ACTIVITY

SATISFACTORY TO

DES JTR | DRW MKW | CHK JTR

PM/DM H. PERRY

BRANCH MANAGER P. FAULKNER

CHIEF ENG/ARCH

FIRE PROTECTION

DEPARTMENT OF THE NAVY
NAVAL FACILITIES ENGINEERING SYSTEMS COMMAND
NAVAL FACILITIES ENGINEERING SYSTEMS COMMAND ~ MIDATLANTIC
DESIGN AND CONSTRUCTION (DC) CODE
NAVAL STATION - NORFOLK, VA.
MARINE CORPS AIR STATION CHERRY POINT, NC

OVERHAUL ELEVATOR - BUILDING 4224

ELECTRICAL DETAILS

SCALE: AS INDICATED

EPROJECT NO.:

STA. PROJ. NO.: 7320479

NAVFAC DRAWING NO. 12908254

SHEET 29 OF 31

E-501

DRAWFORM REVISION: 25 AUGUST 2020

MECHANICAL EQUIPMENT CONNECTION SCHEDULE														
SYMBOL	REMARKS	FURN. BY	KVA	HP	VOLTS	F.L.A.	M.C.A.	DISC. SW. SIZE	DISC. SW. NEMA	DISC. SW. PROV.	CIR. BKR. OR FUSE SIZE	AWG SIZE	GND. WIRE SIZE	CONDUIT SIZE
DCU-1	COND. UNIT	MECH.	2.3	-	208/1	-	11.0	30/2	3R	ELEC.	25/2	3-#10	#10	3/4"
DAC-1	AIR HANDLER	MECH.	$$	-	208/1	-	1.0	30/2	1	ELEC.	15/2	3-#12	#12	3/4"
-	ELEVATOR	OTHERS	41.4	40	480/3	52.0	-	100/3	1	ELEC.	100/3	4-#2	#6	1 1/2"

BREAKER SIZES FOR ALL EQUIPMENT SIZED AT MOCP WHERE APPLICABLE.

ALL DISCONNECTS FOR EQUIPMENT MUST BE HEAVY-DUTY TYPE.

$$ INDOOR UNITS ARE POWERED BY OUTDOOR UNIT.

LIGHT FIXTURE SCHEDULE						
DESIGNATION	TEMPLATE	DESCRIPTION	VOLTAGE	BALLAST TYPE/ QUANTITY	NUMBER/TYPE LAMPS	TOTAL WATTS
A	NL-22	4' LED GASKETED STRIP FIXTURE	120/277/1	1-ELEC DRIVER	LED (4,000 LUM/35K)	36
B	NL-23	4' LED STRIP FIXTURE	120/277/1	1-ELEC DRIVER	LED (4,000 LUM/35K)	36

NOTES:

1. ALL FIXTURES, BALLASTS, AND DRIVERS MUST BE UL LISTED. ALL BALLASTS MUST BE INSTANT START, HIGH-PERFORMANCE ELECTRONIC WITH NORMAL BALLAST FACTOR (0.88) UNLESS OTHERWISE NOTED. ALL LED DRIVERS MUST COMPLY WITH NEMA 410.

SYM	DESCRIPTION	DATE	APPR

SEAL

CRENSHAW CONSULTING
NC LICENSE: C-0 1988
www.crenshawconsulting.com
808 North Bryan, Suite 200
Raleigh, North Carolina 27609
919-571-0270 Fax: 571-0609
A/E INFO

APPROVED

FOR COMMANDER NAVFAC

ACTIVITY

SATISFACTORY TO

DES JTR | DRW MKW | CHK JTR

PM/DM H. PERRY

BRANCH MANAGER P. FAULKNER

CHIEF ENG/ARCH

FIRE PROTECTION

DEPARTMENT OF THE NAVY
NAVAL FACILITIES ENGINEERING SYSTEMS COMMAND
DESIGN AND CONSTRUCTION (DC) CORE
MARINE CORPS AIR STATION
NAVAL FACILITIES ENGINEERING SYSTEMS COMMAND ~ MIDATLANTIC
NAVAL STATION - NORFOLK, VA
CHERRY POINT, NC

OVERHAUL ELEVATOR - BUILDING 4224

ELECTRICAL SCHEDULES

SCALE: AS INDICATED

EPROJECT NO.:

STA. PROJ. NO.: 7320479

NAVFAC DRAWING NO. 12908255

SHEET 30 OF 31

E-601

DRAWFORM REVISION: 25 AUGUST 2020

Panel: MR

50/3 MAIN BREAKER

Poles: 24 Voltage: 120/208
Phase: 3 Wires: 4

LOAD SERVED	KVA	BRKR.		ø		BRKR.	KVA	LOAD SERVED
SUMP PUMP CONTROL PANEL	0.5	20/1	1	A	2	20/1	0.1	MACHINE ROOM LIGHTS
MACHINE ROOM RECEPTS.	0.7	20/1	3	B	4	20/1	0.4	HOISTWAY LIGHTS
ELEV. CAB LIGHTS	0.5	20/1	5	C	6	20/1	0.5	ELEV. PIT RECEPTS.
ELEV. OIL COOLER	1.0	20/1	7	A	8	20/1(G)	1.0	ELEV. PIT DED. SIMPLEX RECEPT.
ELEV. OIL HEATER	1.0	20/1	9	B	10	20/1		SPARE
DCU-1/DAHU-1	1.2	25/2	11	C	12	20/1		SPARE
	1.2		13	A	14	20/1		SPARE
SPACE		SPACE	15	B	16	SPACE		SPACE
SPACE		SPACE	17	C	18	SPACE		SPACE
SPACE		SPACE	19	A	20	SPACE		SPACE
SPACE		SPACE	21	B	22	SPACE		SPACE
SPACE		SPACE	23	C	24	SPACE		SPACE

Demand Load Summary:

Lighting:	0.5 KVA	@ 125%	0.6 KVA	Phase A:	3.8 KVA	31.5 Amps
Largest Motor:	0.0 KVA	@ 125%	0.0 KVA	Phase B:	2.2 KVA	18.5 Amps
Gen Receptacles:	0.0 KVA	NOTE 2	0.0 KVA	Phase C:	2.2 KVA	18.3 Amps
All Other:	7.6 KVA	@ 100%	7.6 KVA	Total Panel Load:	8.2 KVA	22.7 Amps

- [X] GROUND BAR
- [X] SEPARATE NEUTRAL BAR
- [ ] U.L. S.E. RATED
- [X] SURFACE MOUNTED
- [ ] NEMA 3R
- [ ] FEED THRU LUGS
- [ ] EXISTING PANEL

1. ALL BREAKERS SHALL BE RATED AT 10,000 AIC.
2. BREAKERS MUST BE LOCKABLE.

'SWB #2' SEC 3 BREAKER SCHEDULE

NO	SIZE	SERVES
	2000 AMP SECTION	
1	SPACE	-
2	SPACE	-
3	SPACE	-
4	SPACE	-
5	800/3	EX. P-2
6	800/3	EX. PP-7A
7	800/3	EX. PP-6
8	SPACE	-
9	SPACE	-
10	SPACE	-
11	SPACE	-

'SWB #2' SEC 2 BREAKER SCHEDULE

NO	SIZE	SERVES
	2000 AMP SECTION	
1	250/3	EX. SPB-6
2	250/3	EX. LP-J6
3	250/3	EX. MCC-2
4	**100/3**	**FREIGHT ELEVATOR**
5	400/3	EX. WC-2
6	**25/3**	**ELEV. MACHINE ROOM PANEL 'MR' (XFRMR)**
7	SPACE	SPACE
8	1000/3	EX. DEQA
9	SPACE	SPACE
10	SPACE	SPACE
11	600/3	EX. SPB-4
12	100/3	EX. SPB-3
13	250/3	EX. LP/N4
14	250/3	EX. HEQ12
15	250/3	EX. SPB-13
16	250/3	EX. SPB-11
17	250/3	EX. SPB-1
18	250/3	EX. SPB-5
19	250/3	EX. LP-6
20	SPACE	SPACE
21	SPACE	SPACE
22	SPACE	SPACE
23	SPACE	SPACE
25	SPACE	SPACE

'SWB #2' SEC 1 BREAKER SCHEDULE

NO	SIZE	SERVES
	3000 AMP SECTION	
1	800/3	EX. SPB-7
2	SPACE	-
3	SPACE	-
4	800/3	EX. CHILLER
5	800/3	EX. LARGE AUTOCLAVE
6	SPACE	-
7	SPACE	-
8	SPACE	-
9	SPACE	-
10	600/3	EX. K-9

3000/3 GFI MAIN BREAKER, 277/480 VOLT, 3ø, 4 WIRE, S/N, GROUND BAR, U.L. S.E. LABEL EXISTING A.I.C.

SEE DEMAND LOADS FOR PANEL LOAD INFORMATION.

PANEL SCHEDULE NOTES:

1. VALUES FOR DEMAND LOADS INCLUDE ALL CODE FACTORS SUCH AS 125% FOR CONTINUOUS LOADS, 125% LARGEST MOTOR, ETC.
2. BREAKER SIZES SHOWN FOR NEW EQUIPMENT IN PANEL SCHEDULES ARE FOR REFERENCE ONLY, SEE EQUIPMENT CONNECTION SCHEDULE(S) FOR ADDITIONAL INFORMATION. WHERE BREAKER / FUSE SIZE BETWEEN SCHEDULES CONFLICT, THE EQUIPMENT CONNECTION SCHEDULE MUST TAKE PRECEDENCE.
3. ALL PANEL DIRECTORIES MUST BE COMPLETED IN ACCORDANCE WITH NEC 408.4. LABELING MUST BE SPECIFIC.
4. CONTRACTOR MUST PROVIDE MULTIPOLE BREAKERS IN LIEU OF ALL SINGLE POLE BREAKERS SHOWN WHEN MULTIWIRE BRANCH CIRCUITS ARE INSTALLED PER NEC 210.7.
5. CONTRACTOR MUST LABEL ALL BREAKERS FEEDING EMERGENCY AND EXIT LIGHTING PER NEC 700.10(A).
6. PROVIDE ARC FLASH HAZARD WARNING LABELS AS REQUIRED ON ALL PANELS AFFECTED BY THIS WORK. COMPLY WITH NEC 110.16 (EXISTING AND NEW).
7. CONTRACTOR MUST PROVIDE IDENTIFICATION FOR NEW FEEDERS AND ANY NEW BRANCH CIRCUITS PER NEC 200.6, 210.5, AND 215.12.
8. CIRCUIT BREAKERS USED FOR HVAC EQUIPMENT MUST BE "HACR" TYPE. BREAKERS SERVING HOT BOXES OR HEAT TRACE MUST HAVE GROUND-FAULT EQUIPMENT PROTECTION.
9. EACH CIRCUIT BREAKER RATED 1200 AMPS OR HIGHER MUST BE PROVIDED WITH AN ARC FLASH REDUCTION MAINTENANCE SWITCH AND INDICATOR PER NEC 240.87(B)(3) MOUNTED INTEGRAL TO BREAKER, SWITCHBOARD, OR PANEL ENCLOSURE.
10. BREAKER NOTATIONS IN PARENTHESIS IN PANEL SCHEDULES INDICATE THAT THE FOLLOWING FUNCTIONS BE PROVIDED:
    - 10.1. (A) - COMBINATION TYPE AFCI BREAKER PER NEC SECTION 210.12.
    - 10.2. (G) - GROUND FAULT CIRCUIT INTERRUPTER (GFCI, 5 mA).
    - 10.3. (GE) - GROUND FAULT EQUIPMENT PROTECTION (GFEP, 30 mA).
    - 10.4. (L) - BREAKER HANDLE LOCK. BREAKER LOCK MUST BE ACCESSIBLE FROM OUTSIDE OF PANEL AND MUST NOT REQUIRE THE REMOVAL OF PANEL COVER IN ORDER TO RESET THE BREAKER.
11. BOLDED TEXT INDICATES A NEW OR CHANGED CIRCUIT ON AN EXISTING PANEL, BOLDED BREAKERS ARE NEW OR RELOCATED TO LOCATION SHOWN.
12. ENGINEER HAS SHOWN NEW CIRCUITS IN LOCATIONS DETERMINED TO BE SPARE OR SPACE BASED ON PANEL DIRECTORIES AND OTHER AVAILABLE INFORMATION. CONTRACTOR MUST VERIFY THAT PLACEMENT SHOWN DOES NOT INTERFERE WITH EXISTING CIRCUITS TO REMAIN. VERIFY AVAILABLE CIRCUITS BASED ON NEW AND DEMO PLANS AND CONTACT ENGINEER WITH ANY CONFLICTS.
13. PROVIDE MINIMUM CLEARANCE LABEL ON ALL REQUIRED EQUIPMENT (EXISTING AND NEW.)
14. FIRE ALARM EQUIPMENT ON LOCKED BREAKERS. BREAKERS MUST BE RED IN COLOR AND LABELED FIRE PROTECTION/LIFE SAFETY.

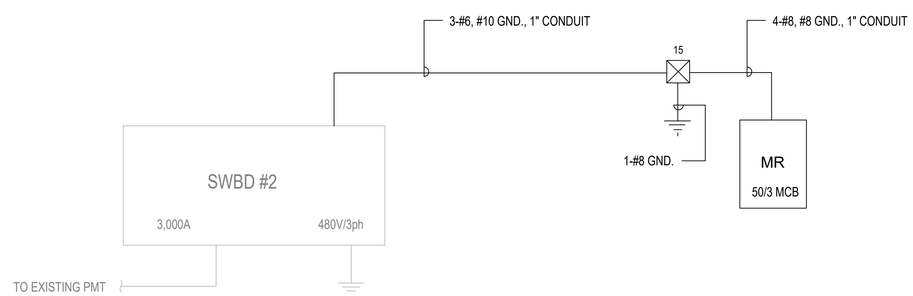

A3 PARTIAL ELECTRICAL RISER DIAGRAM
SCALE: NTS

ELECTRICAL LABELING NOTE

PROVIDE MACHINE ENGRAVED PLACARD LABELING ATTACHED WITH RIVETS TO ALL DISCONNECTS, PANELS, AND MOTOR-DISCONNECT SWITCHES INDICATING EQUIPMENT NAME, VOLTAGE AND PHASE, AMPERAGE, HERTZ, AND SOURCE FEED.

SWITCH AND RECEPTACLE LABELING NOTE

PROVIDE LABEL PRINTER TYPE LABELING FOR ALL SWITCHES AND RECEPTACLES INDICATING SOURCE FEED WITH PANEL AND CIRCUIT NUMBER.

SYM	DESCRIPTION	DATE	APPR

NAVFAC

SEAL

CRENSHAW CONSULTING ENGINEERS
NC LICENSE #C-1558
www.crenshawconsulting.com
8520 Sunl Survey, Suite 200
Raleigh, North Carolina 27609
919-571-0370 Fax: 571-0009

A/E INFO

APPROVED

FOR COMMANDER NAVFAC

ACTIVITY

SATISFACTORY TO

DES JTR | DRW MKW | CHK JTR

PM/DM H. PERRY

BRANCH MANAGER P. FAULKNER

CHIEF ENG/ARCH

FIRE PROTECTION

DEPARTMENT OF THE NAVY
NAVAL FACILITIES ENGINEERING SYSTEMS COMMAND
DESIGN AND CONSTRUCTION (DC) CORE
MARINE CORPS AIR STATION

NAVAL FACILITIES ENGINEERING SYSTEMS COMMAND ~ MIDATLANTIC
NAVAL STATION - NORFOLK, VA
CHERRY POINT, NC

OVERHAUL ELEVATOR - BUILDING 4224

ELECTRICAL SCHEDULES

SCALE: AS INDICATED

EPROJECT NO.:

STA. PROJ. NO.: 7320479

NAVFAC DRAWING NO. 12908256

SHEET 31 OF 31

E-602

DRAWFORM REVISION: 25 AUGUST 2020