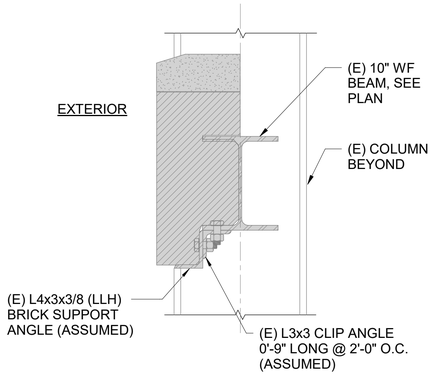

EXISTING CONDITION

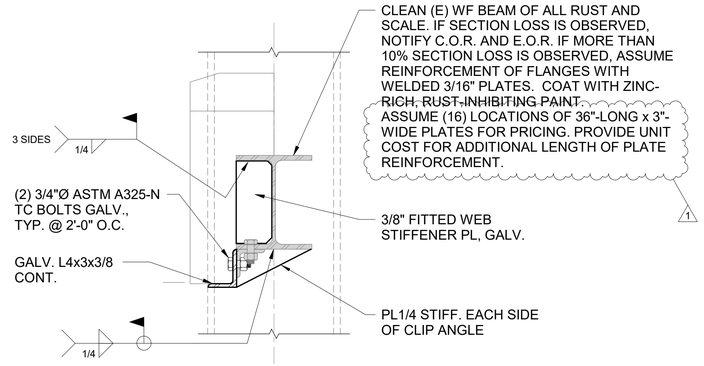

REPAIR DETAIL

1 S6.3 TYP. HUNG LINTEL REPLACEMENT AT HANGAR CLERESTORIES - TRUSS BOTTOM CHORD LEVEL

SCALE E

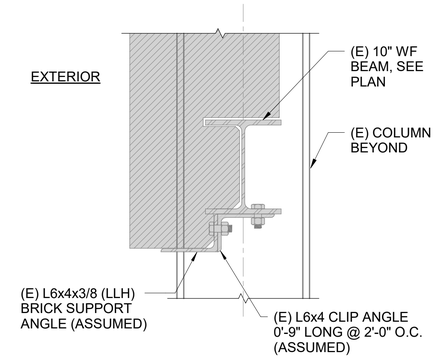

EXISTING CONDITION

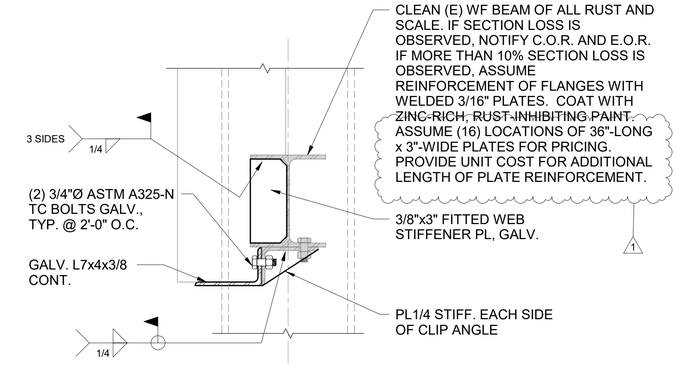

REPAIR DETAIL

2 S6.3 TYP. HUNG LINTEL REPLACEMENT AT HANGAR CLERESTORIES - TRUSS TOP CHORD LEVEL

SCALE E

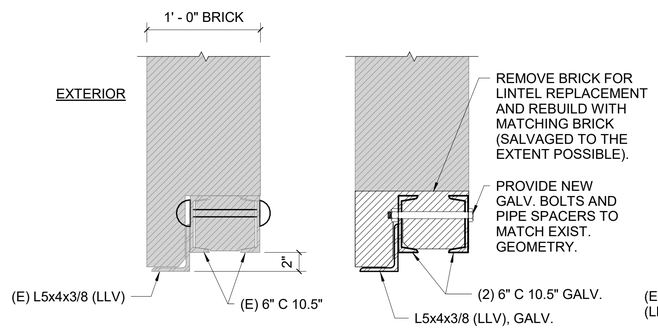

EXISTING CONDITION REPAIR DETAIL

3 S6.3 TYPICAL LINTEL REPAIR AT LEAN-TO TYPE L1

SCALE E

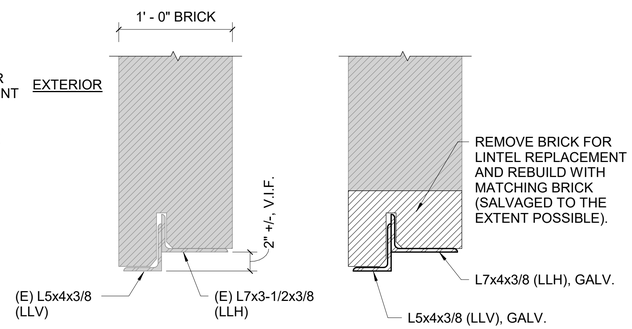

EXISTING CONDITION REPAIR DETAIL

4 S6.3 TYPICAL LINTEL REPAIR AT LEAN-TO TYPE L2

SCALE E

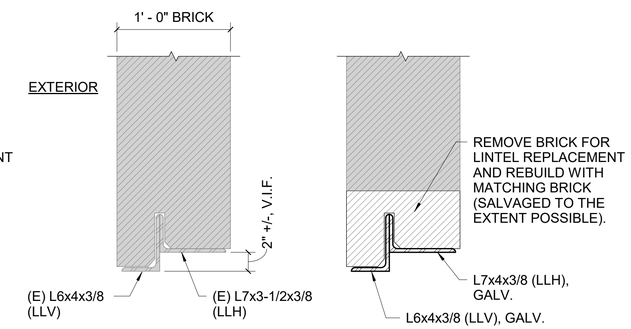

EXISTING CONDITION REPAIR DETAIL

5 S6.3 TYPICAL LINTEL REPAIR AT LEAN-TO TYPE L3

SCALE E

SUGGESTED LINTEL REPLACEMENT SEQUENCE

1. INSTALL TEMPORARY SHORING AS NECESSARY USING ADJUSTABLE POSTS OR FRAMING ON EACH SIDE OF BEARING WALL IMMEDIATELY ABOVE NEW LINTEL OR BY NEEDLING AND SHORING.
2. REMOVE A HORIZONTAL BAND OF MASONRY ABOVE THE EXISTING LINTEL TO BE REPLACED AT OUTSIDE FACE OF WALL.
3. INSTALL FIRST (OUTER) STEEL LINTEL AND TEMPORARY BLOCKING AT 2'-0" BETWEEN NEW LINTEL AND UNDERSIDE OF EXISTING MASONRY AS NECESSARY. PROVIDE BEARING LENGTH TO MATCH EXISTING (12" ASSUMED).
4. REPEAT STEP 3 ON THE OPPOSITE FACE OF THE WALL IF LINTEL AT INNER WYTHE OF MASONRY REQUIRES REPLACEMENT.
5. FOR LINTEL L1, BOLT BEAMS TOGETHER THROUGH PIPE SPACERS AT ENDS AND AT 2'-0" O.C. WITH 3/4"Ø A36 THREADED RODS.
6. REBUILD MASONRY ABOVE STEEL WITH BRICK TO MATCH EXISTING. USE SALVAGED BRICK TO THE EXTENT POSSIBLE.
7. ALLOW 12 HOURS FOR CURING, THEN REMOVE SHORING.

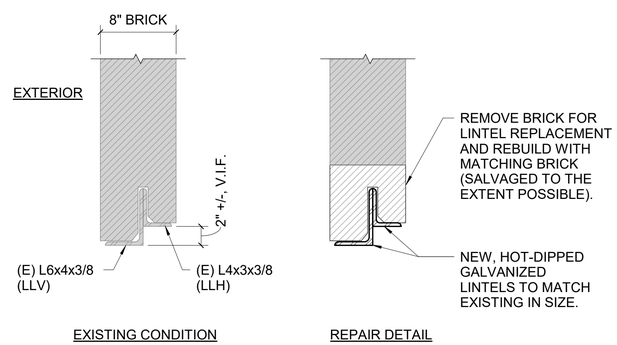

EXISTING CONDITION REPAIR DETAIL

6 S6.3 TYPICAL LINTEL REPAIR AT LEAN-TO TYPE L4

SCALE E

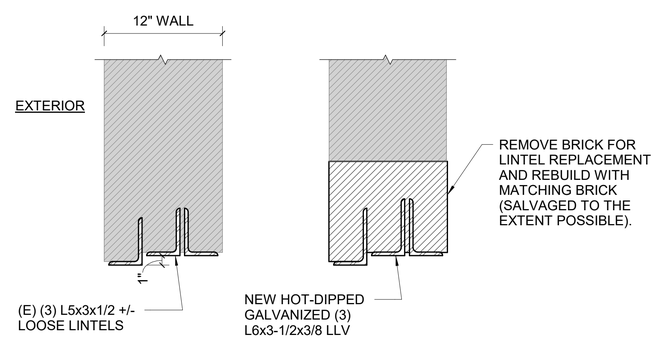

EXISTING CONDITION REPAIR DETAIL

7 S6.3 LINTEL REPAIR AT WPA INFILL BUILDING TYPE L5

SCALE E

SCALE E 12" 6" 0" 1'
SCALE OF FEET

DESIGNED: JCT / EB / PA	SUB SHEET NO.	TITLE OF SHEET	DRAWING NO.
CADD MAS	S6.3	MASONRY REPAIR AND LINTEL REPLACEMENT DETAILS	646 / 190066
TECH. REVIEW: NF			PMIS/PKG NO. GATE 308504
DATE: 12/19/2025		HANGARS 3 & 4 REHABILITATION	SHEET 112 OF 150

C:\Users\jhibau\Documents\STRUCT_GATE_Floyd Bennet Field (r23)_jhibauVG57D.rvt
6/10/2026 5:45:12 PM