1 ONE LINE DIAGRAM - SES-A, 1 OF 2

SCALE: NOT TO SCALE

GENERAL SHEET NOTES

A. **BASE BUILD** SCOPE SHALL ONLY INCLUDE EMPTY CONDUITS OF FEEDERS SHOWN ON THIS SHEET WITH FEEDER TAGS.
B. **ADD ALTERNATE SCOPE** SHALL INCLUDE PV PANELS, CARPORTS, DC CONDUCTORS, INVERTERS, AC CONDUCTORS, AC COMBINER BOXES, PV DISTRIBUTION BOARDS.
C. SEE DRAWING E0.1 FOR ABBREVIATIONS, SYMBOLS, GENERAL NOTES.
D. THE CONTRACTOR SHALL COORDINATE EXACT LOCATION OF EQUIPMENT POWER CONNECTIONS WITH EQUIPMENT INSTALLER PRIOR TO ROUGH-IN.
E. COORDINATE FINAL LOCATION OF MECHANICAL EQUIPMENT AND ASSOCIATED DISCONNECT SWITCHES, STARTERS, VFDS, CONTROL POWER AND OTHER POWER REQUIREMENTS WITH DIV 23 AND MECHANICAL DRAWINGS.
F. SEE MECHANICAL EQUIPMENT SCHEDULE FOR ASSOCIATED OVERCURRENT DEVICES, DISCONNECT SWITCHES, STARTERS AND WIRES.
G. VOLTAGE DROP SHALL BE LIMITED TO LESS THAN 3% FOR ALL BRANCH CIRCUITS AND 2% FOR ALL FEEDERS.
H. CONTRACTOR SHALL COORDINATE AND FIELD VERIFY REQUIREMENT OF NEUTRAL CONDUCTOR FOR ALL EQUIPMENT AND PROVIDE NEUTRAL CONDUCTOR AS NECESSARY.
I. ALL LIFE SAFETY AND LIGHTING PANELBOARDS SHALL BE EQUIPPED WITH TYPE 2 SPD.
J. ALL AUTOMATIC TRANSFER SWITCHES SHALL BE 4 POLE AND EQUIPPED WITH BYPASS ISOLATION.
K. ALL UTILITY TRANSFORMERS DESCRIBED AS NAVOPACHE TRANSFORMER TO BE COORDINATED WITH UTILITY AND PROVIDED BY UTILITY. COORDINATE ALL FINAL REQUIREMENTS AND AVAILABLE FAULT CURRENT CONTRIBUTIONS BASED ON SUPPLIED EQUIPMENT. BASIS OF DESIGN 2500KVA, AND 5%Z. A
L. ELECTRICAL EQUIPMENT SHALL BE CONFIGURED AS FOLLOWS:
-SERVICE ENTRANCE SECTIONS - UL891 REAR CONNECTED SWITCHBOARD
-DISTRIBUTION SWITCHBOARDS WITH DRAW-OUT CIRCUIT BREAKERS - UL891 SWITCHBOARD, DRAWN-OUT MOLDED CASE CIRCUIT BREAKERS
-GENERATOR PARALLELING GEAR - UL1558 SWITCHGEAR E

SHEET KEYNOTES

E501 NAVOPACHE UTILITY METER. METER SHALL BE EQUIPPED WITH CAPABILITY TO INTERFACE WITH BMS. ELECTRICAL CONTRACTOR SHALL PROVIDE REQUIRED CONDUIT AND COMMUNICATION WIRING FROM METER TO POINT OF INTERFACE WITH BMS.

E502 COMPLIANCE WITH "NEC 240.87 ARC ENERGY REDUCTION" REQUIRED. REDUCTION METHOD SHALL ALLOW FOR REQUIRED SELECTIVE DEVICE COORDINATION AND ARC FLASH REQUIREMENTS. REFER TO ELECTRICAL SPECIFICATIONS FOR ADDITIONAL INFORMATION.

E503 PROVIDE PERMANENT IDENTIFICATION PLAQUE INDICATING THE FOLLOWING: ELECTRICAL SERVICE #1 OF 5. GENERATORS LOCATED IN ELECTRICAL EQUIPMENT YARD, GENERATOR DISCONNECTS LOCATED IN ADJACENT ELECTRICAL ROOM IN GMDB. PV DISCONNECT LOCATED AT END OF THIS ELECTRICAL EQUIPMENT LINEUP.

E521 PROVIDE RELAY PROTECTION ELEMENTS REQUIRED BY UTILITY AND MULTIPLE GENERATOR AND PV MONITORING AND CONTROL SYSTEM MANUFACTURER. INTEGRATE SEL RELAY AND PROGRAMMING INTO MULTIPLE GENERATOR AND PV MONITORING SYSTEM AND CIRCUIT BREAKER. PROVIDE AND PROGRAM PROTECTION ELEMENT SET POINTS AND LOGIC WITHIN THE RELAY. REFER TO SEL-751 DETAIL FOR ADDITIONAL INFORMATION.

FEEDER SCHEDULE

"A" DENOTES ALUMINUM CONDUCTORS, ALL OTHER CONDUCTORS SHALL BE COPPER

60	4#4 + 1#10 G, 1 1/4" C
60V1	4#1 + 1#6 G, 1 1/2" C
80	4#3 + 1#8 G, 1 1/4" C
A125	4#2/0 + 1#6 G, 2" C
A150	4#3/0 + 1#4 G, 2" C
A200/1	4#400KCMIL + 1#1 G, 2 1/2" C
A225	4#300KCMIL + 1#2 G, 2 1/2" C
A250	4#350KCMIL + 1#2 G, 2 1/2" C
A300	4#500KCMIL + 1#2 G, 3" C
A400	2 SETS OF 4#250KCMIL + 1#1 G, (2) 2 1/2" C
A1000	3 SETS OF 4#600KCMIL + 1#4/0 G, (3) 3 1/2" C
T15	15KVA TRANSFORMER, 480-208Y/120V, 3PH PRIMARY FEEDER: 3#10 + 1#10 G, 3/4" C SECONDARY FEEDER: 4#4 + 1#8 G, 1 1/4" C BONDING JUMPERS & GROUNDING ELECTRODE CONDUCTOR: #8
T45	45KVA TRANSFORMER, 480-208Y/120V, 3PH PRIMARY FEEDER: 3#3 + 1#8 G, 1 1/4" C SECONDARY FEEDER: 4#1/0 + 1#6 G, 2" C BONDING JUMPERS & GROUNDING ELECTRODE CONDUCTOR: #6
T112	112.5KVA TRANSFORMER, 480-208Y/120V, 3PH PRIMARY FEEDER: 3#3/0 + 1#6 G, 2" C SECONDARY FEEDER: 2 SETS OF 4#3/0 + 1#2 G, (2) 2" C BONDING JUMPERS & GROUNDING ELECTRODE CONDUCTOR: #2

IHS Whiteriver Hospital

200 W Hospital Drive
Whiteriver, Arizona, 85941

IHS Project #: 131445
IHS Contract #: 75H70123R00008
IHS Award Date: 02/02/2024

BASED ON PROGRAM OF REQUIREMENTS DATED [**03/26/22**], POR AMENDMENT DATED [**02/03/25**], AND ON SCHEMATIC DRAWINGS APPROVED [**11/19/24**].

SMITHGROUP

455 NORTH THIRD STREET
SUITE 250
PHOENIX, AZ 85004
602.265.2200
smithgroup.com

ISSUED FOR	DATE
BID ADDENDUM-E	28MAY26
BID ADDENDUM-A	16APR26
FINAL CONSTRUCTION DOCUMENTS	05MAR26

SEALS AND SIGNATURES

Registered Professional Engineer (Electrical) CERTIFICATE NO. 54673 DANIEL L. PETERSON Date Signed 05-28-26 ARIZONA U.S.A.

EXPIRES: 6-30-28

ELECTRICAL ONE LINE DIAGRAM - SES-A, 1 OF 2

Drawn By: Whittington Checked By: Baca

14904.000

PROJECT NUMBER

CD

E5.1.1

SHEET NUMBER

Plot Date: 5/28/2026 12:08:44 PM Whittington

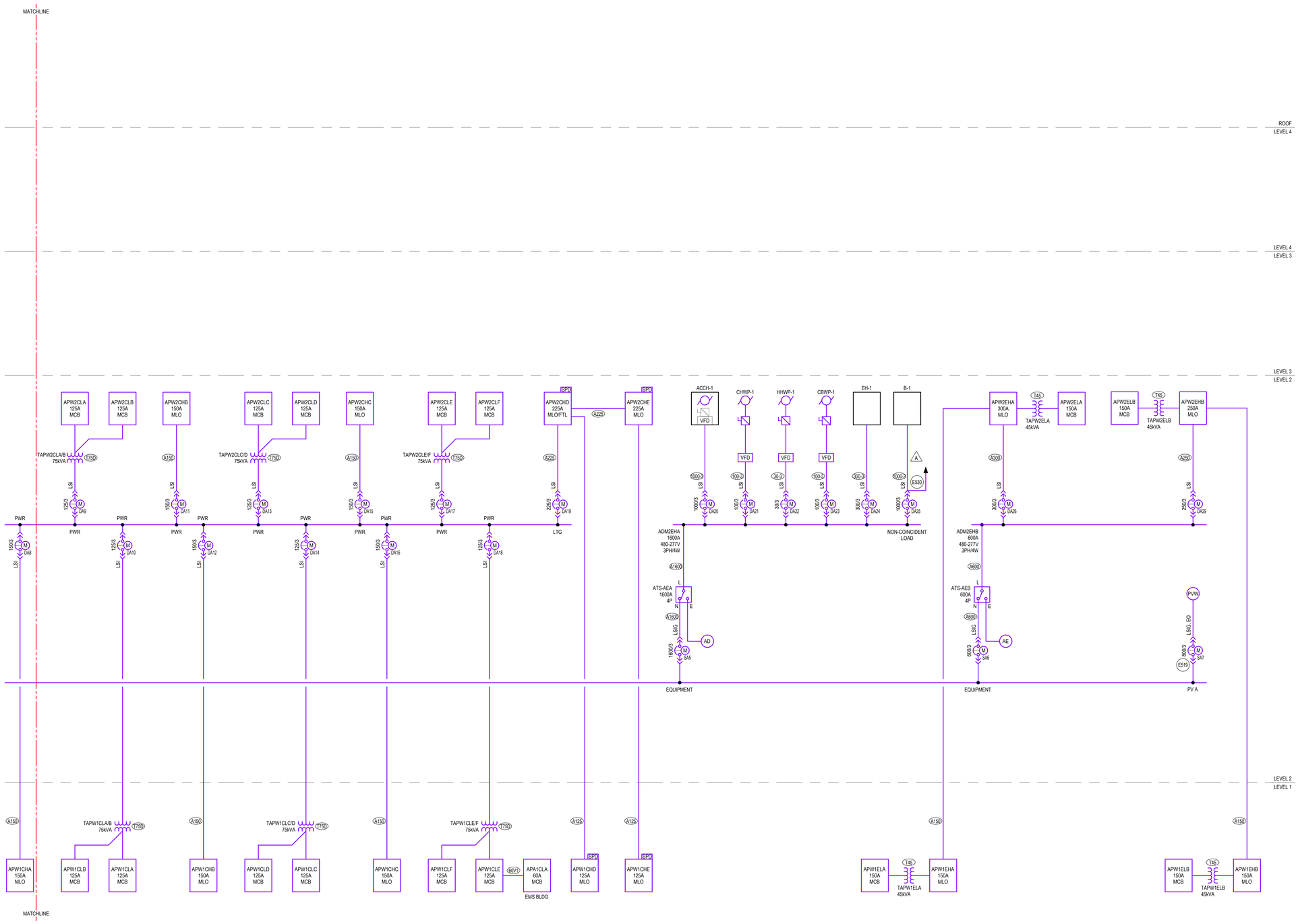

1 ONE LINE DIAGRAM - SES-A, 2 OF 2
SCALE: NOT TO SCALE

GENERAL SHEET NOTES

A. **BASE BUILD** SCOPE SHALL ONLY INCLUDE EMPTY CONDUITS OF FEEDERS SHOWN ON THIS SHEET WITH FEEDER TAGS.
B. **ADD ALTERNATE SCOPE** SHALL INCLUDE PV PANELS, CARPORTS, DC CONDUCTORS, INVERTERS, AC CONDUCTORS, AC COMBINER BOXES, PV DISTRIBUTION BOARDS.
C. SEE DRAWING E0.1 FOR ABBREVIATIONS, SYMBOLS, GENERAL NOTES.
D. THE CONTRACTOR SHALL COORDINATE EXACT LOCATION OF EQUIPMENT POWER CONNECTIONS WITH EQUIPMENT INSTALLER PRIOR TO ROUGH-IN.
E. COORDINATE FINAL LOCATION OF MECHANICAL EQUIPMENT AND ASSOCIATED DISCONNECT SWITCHES, STARTERS, VFDS, CONTROL POWER AND OTHER POWER REQUIREMENTS WITH DIV 23 AND MECHANICAL DRAWINGS.
F. SEE MECHANICAL EQUIPMENT SCHEDULE FOR ASSOCIATED OVERCURRENT DEVICES, DISCONNECT SWITCHES, STARTERS AND WIRES.
G. VOLTAGE DROP SHALL BE LIMITED TO LESS THAN 3% FOR ALL BRANCH CIRCUITS AND 2% FOR ALL FEEDERS.
H. CONTRACTOR SHALL COORDINATE AND FIELD VERIFY REQUIREMENT OF NEUTRAL CONDUCTOR FOR ALL EQUIPMENT AND PROVIDE NEUTRAL CONDUCTOR AS NECESSARY.
I. ALL LIFE SAFETY AND LIGHTING PANELBOARDS SHALL BE EQUIPPED WITH TYPE 2 SPD.
J. ALL AUTOMATIC TRANSFER SWITCHES SHALL BE 4 POLE AND EQUIPPED WITH BYPASS ISOLATION.
K. ALL UTILITY TRANSFORMERS DESCRIBED AS NAVOPACHE TRANSFORMER TO BE COORDINATED WITH UTILITY AND PROVIDED BY UTILITY. COORDINATE ALL FINAL REQUIREMENTS AND AVAILABLE FAULT CURRENT CONTRIBUTIONS BASED ON SUPPLIED EQUIPMENT. BASIS OF DESIGN 2500KVA, AND 5%Z. A
L. ELECTRICAL EQUIPMENT SHALL BE CONFIGURED AS FOLLOWS:
-SERVICE ENTRANCE SECTIONS - UL891 REAR CONNECTED SWITCHBOARD
-DISTRIBUTION SWITCHBOARDS WITH DRAW-OUT CIRCUIT BREAKERS - UL891 SWITCHBOARD, DRAW-OUT MOLDED CASE CIRCUIT BREAKERS. E
-GENERATOR PARALLELING GEAR - UL1558 SWITCHGEAR

SHEET KEYNOTES

E519 PV CIRCUIT BREAKER SHALL BE LOCATED AT LAST BUSSED SPACE. PROVIDE PERMANENT IDENTIFICATION PLAQUE INDICATING THE FOLLOWING: PV POWER SOURCE - DO NOT RELOCATE THIS CIRCUIT BREAKER
A
E530 PROVIDE SHUNT TRIP CIRCUIT BREAKER FOR INTERFACE WITH BOILER EMERGENCY SHUTDOWN EPO SWITCHES. REFER TO EMP2.2.G FOR ADDITIONAL INFORMATION.

FEEDER SCHEDULE

X "A" DENOTES ALUMINUM CONDUCTORS, ALL OTHER CONDUCTORS SHALL BE COPPER

30-3	3#10 + 1#10 G, 3/4" C
60V1	4#1 + 1#6 G, 1 1/2" C
100-3	3#1 + 1#8 G, 1 1/2" C
300-3	3#350KCMIL + 1#4 G, 3" C
1000-3	3 SETS OF 3#400KCMIL + 1#2/0 G, (3) 3" C
A125	4#2/0 + 1#6 G, 2" C
A150	4#3/0 + 1#4 G, 2" C
A225	4#300KCMIL + 1#2 G, 2 1/2" C
A250	4#350KCMIL + 1#2 G, 2 1/2" C
A300	4#500KCMIL + 1#2 G, 3" C
A600	2 SETS OF 4#500KCMIL + 1#2/0 G, (2) 3" C
A1600	5 SETS OF 4#600KCMIL + 1#350KCMIL G, (5) 3 1/2" C
T45	45KVA TRANSFORMER, 480-208Y/120V, 3PH PRIMARY FEEDER: 3#3 + 1#8 G, 1 1/4" C SECONDARY FEEDER: 4#1/0 + 1#6 G, 2" C BONDING JUMPERS & GROUNDING ELECTRODE CONDUCTOR: #6
T75D	75KVA TRANSFORMER, 480-208Y/120V, 3PH PRIMARY FEEDER: 3#1/0 + 1#6 G, 1 1/2" C SECONDARY FEEDERS: 4#1/0 + 1#2 G, 2" C TO EACH PANEL BONDING JUMPERS & GROUNDING ELECTRODE CONDUCTOR: #2

IHS Whiteriver Hospital

200 W Hospital Drive
Whiteriver, Arizona, 85941

IHS Project #: 131445
IHS Contract #: 75H70123R00008
IHS Award Date: 02/02/2024

BASED ON PROGRAM OF REQUIREMENTS DATED [**03/26/22**], POR AMENDMENT DATED [**02/03/25**], AND ON SCHEMATIC DRAWINGS APPROVED [**11/19/24**].

SMITHGROUP

455 NORTH THIRD STREET
SUITE 250
PHOENIX, AZ 85004
602.265.2200
smithgroup.com

ISSUED FOR	DATE
BID ADDENDUM-E	28MAY26
BID ADDENDUM-A	16APR26
FINAL CONSTRUCTION DOCUMENTS	05MAR26

SEALS AND SIGNATURES

Registered Professional Engineer (Electrical)
CERTIFICATE NO. 54673
DANIEL L. PETERSON
Date Signed 05-28-26
ARIZONA U.S.A.
EXPIRES: 6-30-28

ELECTRICAL ONE LINE DIAGRAM - SES-A, 2 OF 2

Drawn By: Whittington Checked By: Baca

PROJECT NUMBER 14904.000

CD

SHEET NUMBER **E5.1.2**

Plot Date: 5/28/2026 12:08:49 PM Whittington

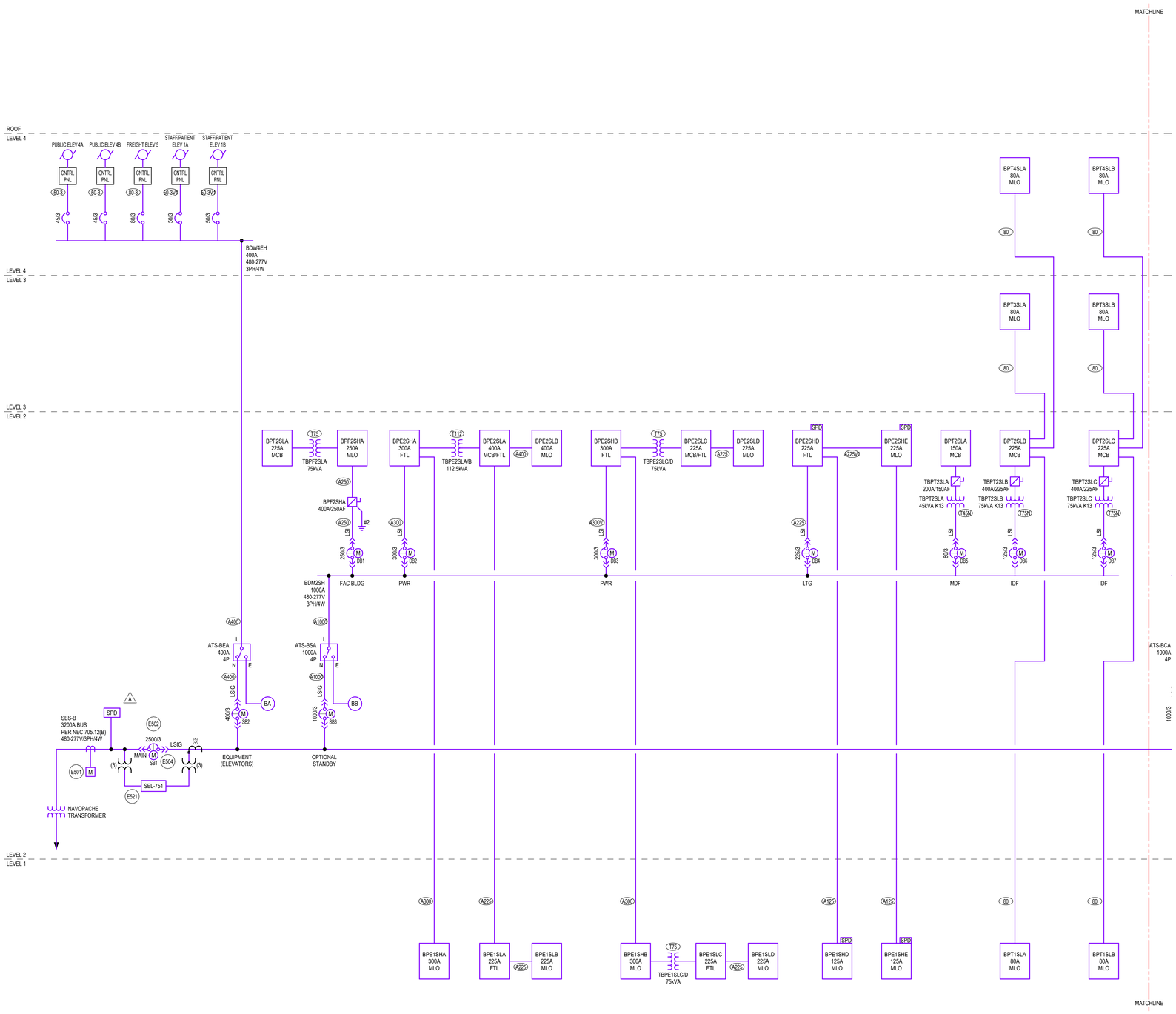

1 ONE LINE DIAGRAM - SES-B, 1 OF 2
SCALE: NOT TO SCALE

GENERAL SHEET NOTES

A. **BASE BUILD** SCOPE SHALL ONLY INCLUDE EMPTY CONDUITS OF FEEDERS SHOWN ON THIS SHEET WITH FEEDER TAGS.
B. **ADD ALTERNATE SCOPE** SHALL INCLUDE PV PANELS, CARPORTS, DC CONDUCTORS, INVERTERS, AC CONDUCTORS, AC COMBINER BOXES, PV DISTRIBUTION BOARDS.
C. SEE DRAWING E0.1 FOR ABBREVIATIONS, SYMBOLS, GENERAL NOTES.
D. THE CONTRACTOR SHALL COORDINATE EXACT LOCATION OF EQUIPMENT POWER CONNECTIONS WITH EQUIPMENT INSTALLER PRIOR TO ROUGH-IN.
E. COORDINATE FINAL LOCATION OF MECHANICAL EQUIPMENT AND ASSOCIATED DISCONNECT SWITCHES, STARTERS, VFDS, CONTROL POWER AND OTHER POWER REQUIREMENTS WITH DIV 23 AND MECHANICAL DRAWINGS.
F. SEE MECHANICAL EQUIPMENT SCHEDULE FOR ASSOCIATED OVERCURRENT DEVICES, DISCONNECT SWITCHES, STARTERS AND WIRES.
G. VOLTAGE DROP SHALL BE LIMITED TO LESS THAN 3% FOR ALL BRANCH CIRCUITS AND 2% FOR ALL FEEDERS.
H. CONTRACTOR SHALL COORDINATE AND FIELD VERIFY REQUIREMENT OF NEUTRAL CONDUCTOR FOR ALL EQUIPMENT AND PROVIDE NEUTRAL CONDUCTOR AS NECESSARY.
I. ALL LIFE SAFETY AND LIGHTING PANELBOARDS SHALL BE EQUIPPED WITH TYPE 2 SPD.
J. ALL AUTOMATIC TRANSFER SWITCHES SHALL BE 4 POLE AND EQUIPPED WITH BYPASS ISOLATION.
K. ALL UTILITY TRANSFORMERS DESCRIBED AS NAVOPACHE TRANSFORMER TO BE COORDINATED WITH UTILITY AND PROVIDED BY UTILITY. COORDINATE ALL FINAL REQUIREMENTS AND AVAILABLE FAULT CURRENT CONTRIBUTIONS BASED ON SUPPLIED EQUIPMENT. BASIS OF DESIGN 2500KVA, AND 5%Z. A
L. ELECTRICAL EQUIPMENT SHALL BE CONFIGURED AS FOLLOWS:
-SERVICE ENTRANCE SECTIONS - UL891 REAR CONNECTED SWITCHBOARD
-DISTRIBUTION SWITCHBOARDS WITH DRAW-OUT CIRCUIT BREAKERS - UL891 SWITCHBOARD, DRAWN-OUT MOLDED CASE CIRCUIT BREAKERS
-GENERATOR PARALLELING GEAR - UL1558 SWITCHGEAR E

SHEET KEYNOTES

E501 NAVOPACHE UTILITY METER. METER SHALL BE EQUIPPED WITH CAPABILITY TO INTERFACE WITH BMS. ELECTRICAL CONTRACTOR SHALL PROVIDE REQUIRED CONDUIT AND COMMUNICATION WIRING FROM METER TO POINT OF INTERFACE WITH BMS.

E502 COMPLIANCE WITH "NEC 240.87 ARC ENERGY REDUCTION" REQUIRED. REDUCTION METHOD SHALL ALLOW FOR REQUIRED SELECTIVE DEVICE COORDINATION AND ARC FLASH REQUIREMENTS. REFER TO ELECTRICAL SPECIFICATIONS FOR ADDITIONAL INFORMATION.

E504 PROVIDE PERMANENT IDENTIFICATION PLAQUE INDICATING THE FOLLOWING: ELECTRICAL SERVICE #2 OF 5. GENERATORS LOCATED IN ELECTRICAL EQUIPMENT YARD, GENERATOR DISCONNECTS LOCATED IN ADJACENT ELECTRICAL ROOM IN GMDB. PV DISCONNECT LOCATED AT END OF THIS ELECTRICAL EQUIPMENT LINEUP.

E521 PROVIDE RELAY PROTECTION ELEMENTS REQUIRED BY UTILITY AND MULTIPLE GENERATOR AND PV MONITORING AND CONTROL SYSTEM MANUFACTURER. INTEGRATE SEL RELAY AND PROGRAMMING INTO MULTIPLE GENERATOR AND PV MONITORING SYSTEM AND CIRCUIT BREAKER. PROVIDE AND PROGRAM PROTECTION ELEMENT SET POINTS AND LOGIC WITHIN THE RELAY. REFER TO SEL-751 DETAIL FOR ADDITIONAL INFORMATION.

FEEDER SCHEDULE

"X" DENOTES ALUMINUM CONDUCTORS, ALL OTHER CONDUCTORS SHALL BE COPPER

50-3	3#6 + 1#10 G, 3/4" C
50-3V1	3#2 + 1#4 G, 1 1/4" C
80	4#3 + 1#8 G, 1 1/4" C
80-3	3#3 + 1#8 G, 1 1/4" C
A125	4#2/0 + 1#6 G, 2" C
A225	4#300KCMIL + 1#2 G, 2 1/2" C
A225V1	4#400KCMIL + 1#1/0 G, 2 1/2" C
A250	4#350KCMIL + 1#2 G, 2 1/2" C
A300	4#500KCMIL + 1#2 G, 3" C
A300V1	4#600KCMIL + 1#1 G, 3" C
A400	2 SETS OF 4#250KCMIL + 1#1 G, (2) 2 1/2" C
A1000	3 SETS OF 4#600KCMIL + 1#4/0 G, (3) 3 1/2" C
T45N	45kVA TRANSFORMER, 480-208Y/120V, 3PH PRIMARY FEEDER: 3#3 + 1#8 G, 1 1/4" C SECONDARY FEEDER: 3#1/0, 1#4/0 N + 1#6 G, 2" C BONDING JUMPERS & GROUNDING ELECTRODE CONDUCTOR: #6
T75	75kVA TRANSFORMER, 480-208Y/120V, 3PH PRIMARY FEEDER: 3#1/0 + 1#6 G, 1 1/2" C SECONDARY FEEDER: 4#4/0 + 1#2 G, 2 1/2" C BONDING JUMPERS & GROUNDING ELECTRODE CONDUCTOR: #2
T75N	75kVA TRANSFORMER, 480-208Y/120V, 3PH PRIMARY FEEDER: 3#1/0 + 1#6 G, 1 1/2" C SECONDARY FEEDER: 3#4/0, 1#500KCMIL N + 1#2 G, 2 1/2" C BONDING JUMPERS & GROUNDING ELECTRODE CONDUCTOR: #2
T112	112.5kVA TRANSFORMER, 480-208Y/120V, 3PH PRIMARY FEEDER: 3#3/0 + 1#6 G, 2" C SECONDARY FEEDER: 2 SETS OF 4#3/0 + 1#2 G, (2) 2" C BONDING JUMPERS & GROUNDING ELECTRODE CONDUCTOR: #2

IHS Whiteriver Hospital

200 W Hospital Drive
Whiteriver, Arizona, 85941

IHS Project #: 131445
IHS Contract #: 75H70123R00008
IHS Award Date: 02/02/2024

BASED ON PROGRAM OF REQUIREMENTS DATED [**03/26/22**], POR AMENDMENT DATED [**02/03/25**], AND ON SCHEMATIC DRAWINGS APPROVED [**11/19/24**].

SMITHGROUP

455 NORTH THIRD STREET
SUITE 250
PHOENIX, AZ 85004
602.265.2200
smithgroup.com

ISSUED FOR	DATE
BID ADDENDUM-E	28MAY26
BID ADDENDUM-A	16APR26
FINAL CONSTRUCTION DOCUMENTS	05MAR26

SEALS AND SIGNATURES

Registered Professional Engineer (Electrical) CERTIFICATE NO. 54673 DANIEL L. PETERSON Date Signed 05-28-26 ARIZONA, U.S.A.
EXPIRES: 6-30-28

ELECTRICAL ONE LINE DIAGRAM - SES-B, 1 OF 2

Drawn By: Whittington Checked By: Baca

PROJECT NUMBER 14904.000

CD

SHEET NUMBER **E5.2.1**

Plot Date: 5/28/2026 12:08:53 PM Whittington

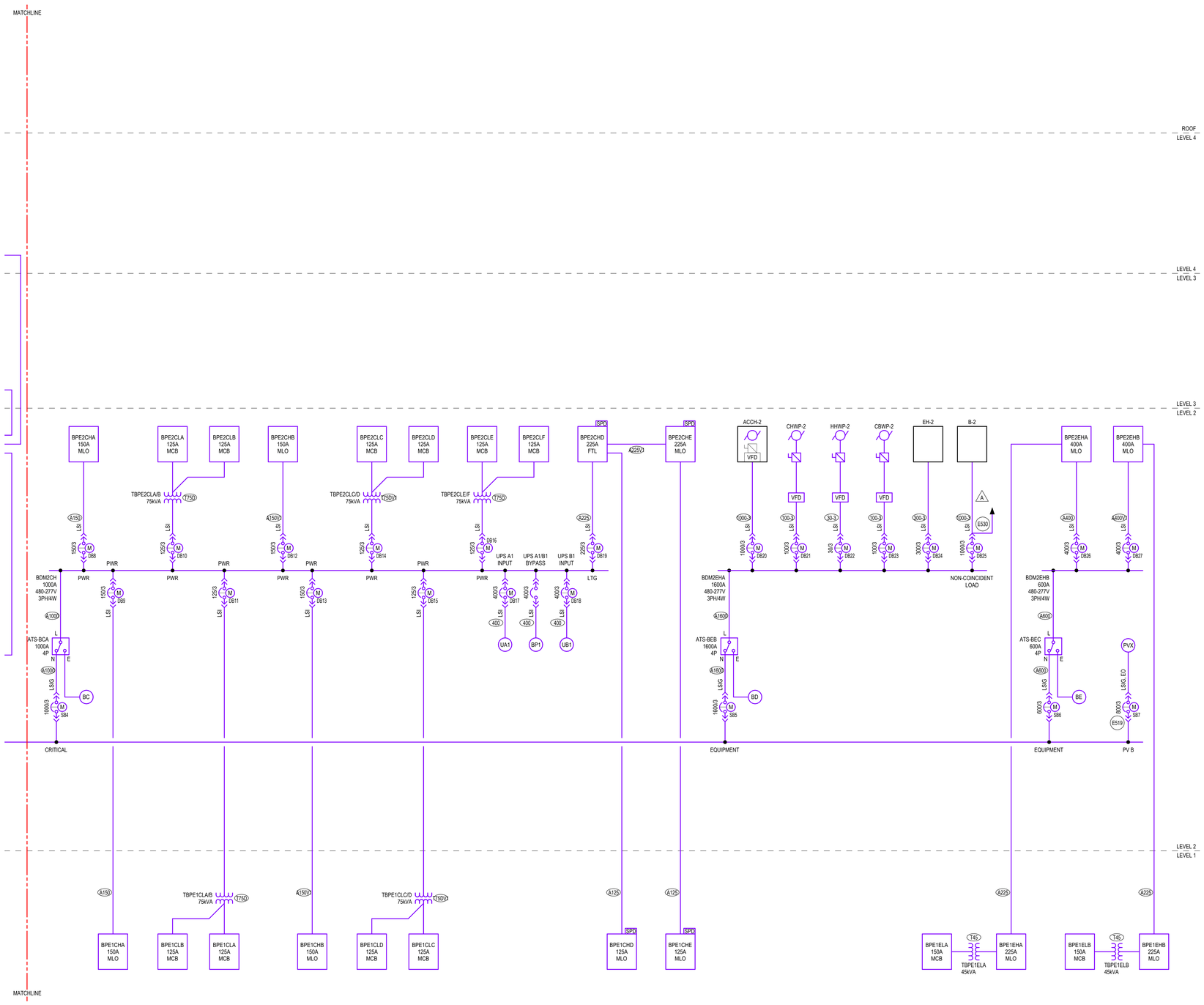

1 ONE LINE DIAGRAM - SES-B, 2 OF 2
SCALE: NOT TO SCALE

GENERAL SHEET NOTES

A. **BASE BUILD** SCOPE SHALL ONLY INCLUDE EMPTY CONDUITS OF FEEDERS SHOWN ON THIS SHEET WITH FEEDER TAGS.
B. **ADD ALTERNATE SCOPE** SHALL INCLUDE PV PANELS, CARPORTS, DC CONDUCTORS, INVERTERS, AC CONDUCTORS, AC COMBINER BOXES, PV DISTRIBUTION BOARDS.
C. SEE DRAWING E0.1 FOR ABBREVIATIONS, SYMBOLS, GENERAL NOTES.
D. THE CONTRACTOR SHALL COORDINATE EXACT LOCATION OF EQUIPMENT POWER CONNECTIONS WITH EQUIPMENT INSTALLER PRIOR TO ROUGH-IN.
E. COORDINATE FINAL LOCATION OF MECHANICAL EQUIPMENT AND ASSOCIATED DISCONNECT SWITCHES, STARTERS, VFDS, CONTROL POWER AND OTHER POWER REQUIREMENTS WITH DIV 23 AND MECHANICAL DRAWINGS.
F. SEE MECHANICAL EQUIPMENT SCHEDULE FOR ASSOCIATED OVERCURRENT DEVICES, DISCONNECT SWITCHES, STARTERS AND WIRES.
G. VOLTAGE DROP SHALL BE LIMITED TO LESS THAN 3% FOR ALL BRANCH CIRCUITS AND 2% FOR ALL FEEDERS.
H. CONTRACTOR SHALL COORDINATE AND FIELD VERIFY REQUIREMENT OF NEUTRAL CONDUCTOR FOR ALL EQUIPMENT AND PROVIDE NEUTRAL CONDUCTOR AS NECESSARY.
I. ALL LIFE SAFETY AND LIGHTING PANELBOARDS SHALL BE EQUIPPED WITH TYPE 2 SPD.
J. ALL AUTOMATIC TRANSFER SWITCHES SHALL BE 4 POLE AND EQUIPPED WITH BYPASS ISOLATION.
K. ALL UTILITY TRANSFORMERS DESCRIBED AS NAVOPACHE TRANSFORMER TO BE COORDINATED WITH UTILITY AND PROVIDED BY UTILITY. COORDINATE ALL FINAL REQUIREMENTS AND AVAILABLE FAULT CURRENT CONTRIBUTIONS BASED ON SUPPLIED EQUIPMENT. BASIS OF DESIGN 2500KVA, AND 5%Z. (A)
L. ELECTRICAL EQUIPMENT SHALL BE CONFIGURED AS FOLLOWS:
-SERVICE ENTRANCE SECTIONS - UL891 REAR CONNECTED SWITCHBOARD
-DISTRIBUTION SWITCHBOARDS WITH DRAW-OUT CIRCUIT BREAKERS - UL891 SWITCHBOARD, DRAW-OUT MOLDED CASE CIRCUIT BREAKERS. (E)
-GENERATOR PARALLELING GEAR - UL1558 SWITCHGEAR

SHEET KEYNOTES

E519 PV CIRCUIT BREAKER SHALL BE LOCATED AT LAST BUSSED SPACE. PROVIDE PERMANENT IDENTIFICATION PLAQUE INDICATING THE FOLLOWING: PV POWER SOURCE - DO NOT RELOCATE THIS CIRCUIT BREAKER. (A)
E530 PROVIDE SHUNT TRIP CIRCUIT BREAKER FOR INTERFACE WITH BOILER EMERGENCY SHUTDOWN EPO SWITCHES. REFER TO EMP2.2.G FOR ADDITIONAL INFORMATION.

FEEDER SCHEDULE

"A" DENOTES ALUMINUM CONDUCTORS, ALL OTHER CONDUCTORS SHALL BE COPPER

30-3	3#10 + 1#10 G, 3/4" C
100-3	3#1 + 1#8 G, 1 1/2" C
300-3	3#350KCMIL + 1#4 G, 3" C
400	2 SETS OF 4#3/0 + 1#3 G, (2) 2" C
1000-3	3 SETS OF 3#400KCMIL + 1#2/0 G, (3) 3" C
A125	4#2/0 + 1#6 G, 2" C
A150	4#3/0 + 1#4 G, 2" C
A150V1	4#400KCMIL + 1#1/0 G, 2-1/2" C
A225	4#300KCMIL + 1#2 G, 2 1/2" C
A225V1	4#400KCMIL + 1#1/0 G, 2 1/2" C
A400	2 SETS OF 4#250KCMIL + 1#1 G, (2) 2 1/2" C
A400V1	2 SETS OF 4#500KCMIL + 1#2/0 G, (2) 3" C
A600	2 SETS OF 4#500KCMIL + 1#2/0 G, (2) 3" C
A1000	3 SETS OF 4#600KCMIL + 1#4/0 G, (3) 3 1/2" C
A1600	5 SETS OF 4#600KCMIL + 1#350KCMIL G, (5) 3 1/2" C
T45	45KVA TRANSFORMER, 480-208Y/120V, 3PH PRIMARY FEEDER: 3#3 + 1#8 G, 1 1/4" C SECONDARY FEEDER: 4#1/0 + 1#6 G, 2" C BONDING JUMPERS & GROUNDING ELECTRODE CONDUCTOR: #6
T75D	75KVA TRANSFORMER, 480-208Y/120V, 3PH PRIMARY FEEDER: 3#1/0 + 1#6 G, 1 1/2" C SECONDARY FEEDERS: 4#1/0 + 1#2 G, 2" C TO EACH PANEL BONDING JUMPERS & GROUNDING ELECTRODE CONDUCTOR: #2
T75DV1	75KVA TRANSFORMER, 480-208Y/120V, 3PH PRIMARY FEEDER: 3#3/0 + 1#4 G, 2" C SECONDARY FEEDERS: 4#1/0 + 1#2 G, 2" C TO EACH PANEL BONDING JUMPERS & GROUNDING ELECTRODE CONDUCTOR: #2

IHS Whiteriver Hospital

200 W Hospital Drive
Whiteriver, Arizona, 85941

IHS Project #: 131445
IHS Contract #: 75H70123R00008
IHS Award Date: 02/02/2024

BASED ON PROGRAM OF REQUIREMENTS DATED [**03/26/22**], POR AMENDMENT DATED [**02/03/25**], AND ON SCHEMATIC DRAWINGS APPROVED [**11/19/24**].

SMITHGROUP

455 NORTH THIRD STREET
SUITE 250
PHOENIX, AZ 85004
602.265.2200
smithgroup.com

ISSUED FOR	DATE
BID ADDENDUM-E	28MAY26
BID ADDENDUM-A	16APR26
FINAL CONSTRUCTION DOCUMENTS	05MAR26

SEALS AND SIGNATURES

Registered Professional Engineer (Electrical) CERTIFICATE NO. 54673 DANIEL L. PETERSON Date Signed 05-28-26 ARIZONA, U.S.A.
EXPIRES: 6-30-28

ELECTRICAL ONE LINE DIAGRAM - SES-B, 2 OF 2

Drawn By: Whittington Checked By: Baca

PROJECT NUMBER 14904.000

CD

SHEET NUMBER **E5.2.2**

Plot Date: 5/28/2026 12:08:58 PM Whittington

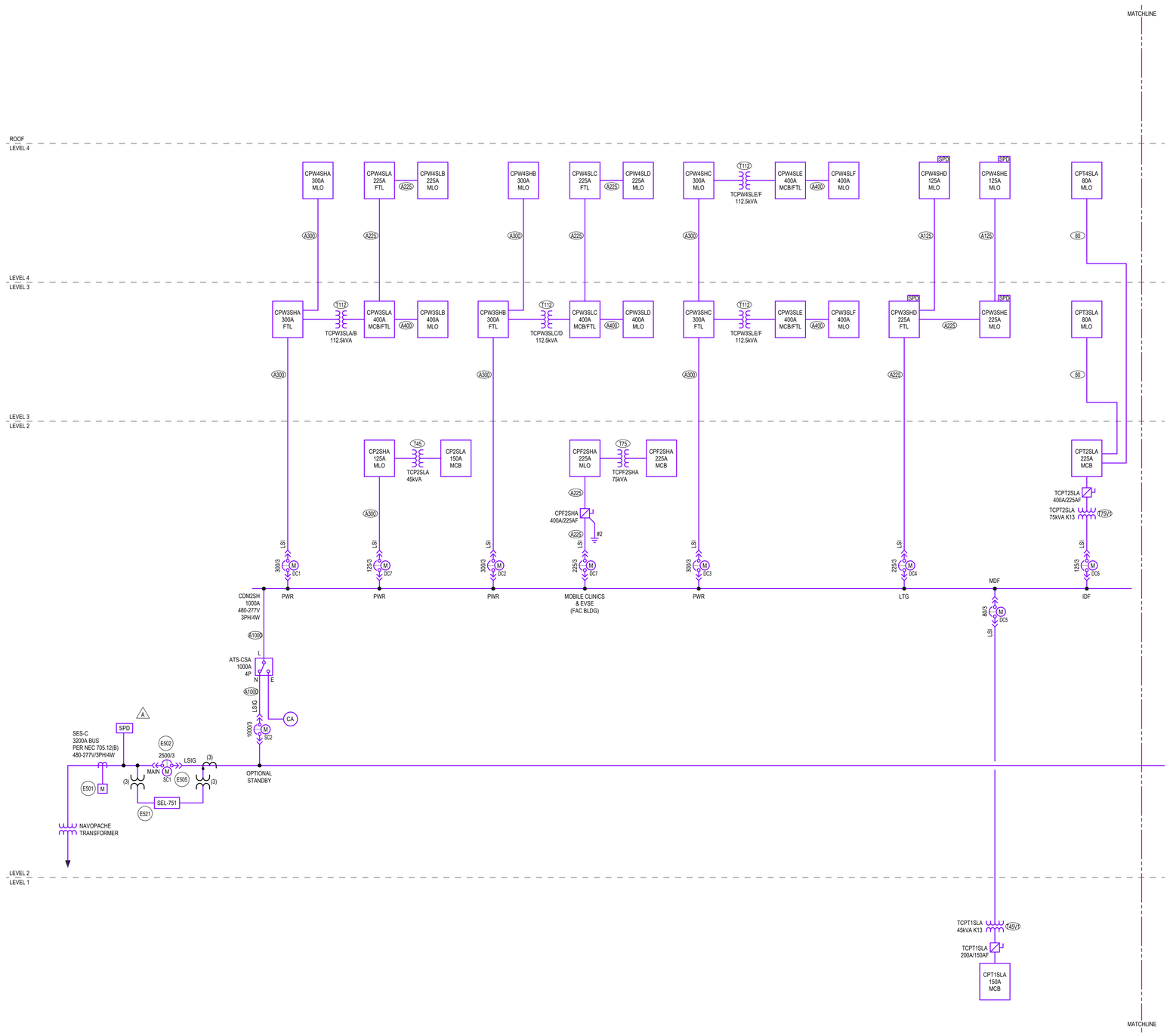

1 ONE LINE DIAGRAM - SES-C, 1 OF 2
SCALE: NOT TO SCALE

GENERAL SHEET NOTES

A. **BASE BUILD** SCOPE SHALL ONLY INCLUDE EMPTY CONDUITS OF FEEDERS SHOWN ON THIS SHEET WITH FEEDER TAGS.
B. **ADD ALTERNATE SCOPE** SHALL INCLUDE PV PANELS, CARPORTS, DC CONDUCTORS, INVERTERS, AC CONDUCTORS, AC COMBINER BOXES, PV DISTRIBUTION BOARDS.
C. SEE DRAWING E0.1 FOR ABBREVIATIONS, SYMBOLS, GENERAL NOTES.
D. THE CONTRACTOR SHALL COORDINATE EXACT LOCATION OF EQUIPMENT POWER CONNECTIONS WITH EQUIPMENT INSTALLER PRIOR TO ROUGH-IN.
E. COORDINATE FINAL LOCATION OF MECHANICAL EQUIPMENT AND ASSOCIATED DISCONNECT SWITCHES, STARTERS, VFDS, CONTROL POWER AND OTHER POWER REQUIREMENTS WITH DIV 23 AND MECHANICAL DRAWINGS.
F. SEE MECHANICAL EQUIPMENT SCHEDULE FOR ASSOCIATED OVERCURRENT DEVICES, DISCONNECT SWITCHES, STARTERS AND WIRES.
G. VOLTAGE DROP SHALL BE LIMITED TO LESS THAN 3% FOR ALL BRANCH CIRCUITS AND 2% FOR ALL FEEDERS.
H. CONTRACTOR SHALL COORDINATE AND FIELD VERIFY REQUIREMENT OF NEUTRAL CONDUCTOR FOR ALL EQUIPMENT AND PROVIDE NEUTRAL CONDUCTOR AS NECESSARY.
I. ALL LIFE SAFETY AND LIGHTING PANELBOARDS SHALL BE EQUIPPED WITH TYPE 2 SPD.
J. ALL AUTOMATIC TRANSFER SWITCHES SHALL BE 4 POLE AND EQUIPPED WITH BYPASS ISOLATION.
K. ALL UTILITY TRANSFORMERS DESCRIBED AS NAVOPACHE TRANSFORMER TO BE COORDINATED WITH UTILITY AND PROVIDED BY UTILITY. COORDINATE ALL FINAL REQUIREMENTS AND AVAILABLE FAULT CURRENT CONTRIBUTIONS BASED ON SUPPLIED EQUIPMENT. BASIS OF DESIGN 2500KVA, AND 5%Z. (A)
L. ELECTRICAL EQUIPMENT SHALL BE CONFIGURED AS FOLLOWS:
-SERVICE ENTRANCE SECTIONS - UL891 REAR CONNECTED SWITCHBOARD
-DISTRIBUTION SWITCHBOARDS WITH DRAW-OUT CIRCUIT BREAKERS - UL891 SWITCHBOARD, DRAW-OUT MOLDED CASE CIRCUIT BREAKERS.
-GENERATOR PARALLELING GEAR - UL1558 SWITCHGEAR (E)

SHEET KEYNOTES

E501 NAVOPACHE UTILITY METER. METER SHALL BE EQUIPPED WITH CAPABILITY TO INTERFACE WITH BMS. ELECTRICAL CONTRACTOR SHALL PROVIDE REQUIRED CONDUIT AND COMMUNICATION WIRING FROM METER TO POINT OF INTERFACE WITH BMS.
E502 COMPLIANCE WITH "NEC 240.87 ARC ENERGY REDUCTION" REQUIRED. REDUCTION METHOD SHALL ALLOW FOR REQUIRED SELECTIVE DEVICE COORDINATION AND ARC FLASH REQUIREMENTS. REFER TO ELECTRICAL SPECIFICATIONS FOR ADDITIONAL INFORMATION.
E505 PROVIDE PERMANENT IDENTIFICATION PLAQUE INDICATING THE FOLLOWING: ELECTRICAL SERVICE #3 OF 5. GENERATORS LOCATED IN ELECTRICAL EQUIPMENT YARD, GENERATOR DISCONNECTS LOCATED IN ADJACENT ELECTRICAL ROOM IN GMDB. PV DISCONNECT LOCATED AT END OF THIS ELECTRICAL EQUIPMENT LINEUP.
E521 PROVIDE RELAY PROTECTION ELEMENTS REQUIRED BY UTILITY AND MULTIPLE GENERATOR AND PV MONITORING AND CONTROL SYSTEM MANUFACTURER. INTEGRATE SEL RELAY AND PROGRAMMING INTO MULTIPLE GENERATOR AND PV MONITORING SYSTEM AND CIRCUIT BREAKER. PROVIDE AND PROGRAM PROTECTION ELEMENT SET POINTS AND LOGIC WITHIN THE RELAY. REFER TO SEL-751 DETAIL FOR ADDITIONAL INFORMATION.

(X) FEEDER SCHEDULE

"X" DENOTES ALUMINUM CONDUCTORS. ALL OTHER CONDUCTORS SHALL BE COPPER

80	4#3 + 1#8 G, 1 1/4" C
A125	4#2/0 + 1#6 G, 2" C
A225	4#300KCMIL + 1#2 G, 2 1/2" C
A300	4#500KCMIL + 1#2 G, 3" C
A400	2 SETS OF 4#250KCMIL + 1#1 G, (2) 2 1/2" C
A1000	3 SETS OF 4#600KCMIL + 1#4/0 G, (3) 3 1/2" C
T45	45KVA TRANSFORMER, 480-208Y/120V, 3PH PRIMARY FEEDER: 3#3 + 1#8 G, 1 1/4" C SECONDARY FEEDER: 4#1/0 + 1#6 G, 2" C BONDING JUMPERS & GROUNDING ELECTRODE CONDUCTOR: #6
T45V1	45KVA TRANSFORMER, 480-208Y/120V, 3PH PRIMARY FEEDER: 3#1 + 1#4 G, 1 1/2" C SECONDARY FEEDER: 4#1/0 + 1#6 G, 2" C BONDING JUMPERS & GROUNDING ELECTRODE CONDUCTOR: #6
T75	75KVA TRANSFORMER, 480-208Y/120V, 3PH PRIMARY FEEDER: 3#1/0 + 1#6 G, 1 1/2" C SECONDARY FEEDER: 4#4/0 + 1#2 G, 2 1/2" C BONDING JUMPERS & GROUNDING ELECTRODE CONDUCTOR: #2
T75V1	75KVA TRANSFORMER, 480-208Y/120V, 3PH PRIMARY FEEDER: 3#3/0 + 1#4 G, 2" C SECONDARY FEEDER: 4#4/0 + 1#2 G, 2 1/2" C BONDING JUMPERS & GROUNDING ELECTRODE CONDUCTOR: #2
T112	112.5KVA TRANSFORMER, 480-208Y/120V, 3PH PRIMARY FEEDER: 3#3/0 + 1#6 G, 2" C SECONDARY FEEDER: 2 SETS OF 4#3/0 + 1#2 G, (2) 2" C BONDING JUMPERS & GROUNDING ELECTRODE CONDUCTOR: #2

INDIAN HEALTH SERVICE · PHS · 1955 · DEPARTMENT OF HEALTH & HUMAN SERVICES, USA

IHS Whiteriver Hospital

200 W Hospital Drive
Whiteriver, Arizona, 85941

IHS Project #: 131445
IHS Contract #: 75H70123R00008
IHS Award Date: 02/02/2024

BASED ON PROGRAM OF REQUIREMENTS DATED [**03/26/22**], POR AMENDMENT DATED [**02/03/25**], AND ON SCHEMATIC DRAWINGS APPROVED [**11/19/24**].

SMITHGROUP

455 NORTH THIRD STREET
SUITE 250
PHOENIX, AZ 85004
602.265.2200
smithgroup.com

ISSUED FOR	DATE
BID ADDENDUM-E	28MAY26
BID ADDENDUM-A	16APR26
FINAL CONSTRUCTION DOCUMENTS	05MAR26

SEALS AND SIGNATURES

Registered Professional Engineer (Electrical) CERTIFICATE NO. 54673 DANIEL L. PETERSON Date Signed 05-28-26 ARIZONA, U.S.A.

EXPIRES: 6-30-28

ELECTRICAL ONE LINE DIAGRAM - SES-C, 1 OF 2

Drawn By: Whittington Checked By: Baca

PROJECT NUMBER 14904.000

CD

SHEET NUMBER **E5.3.1**

Plot Date: 5/28/2026 12:09:02 PM Whittington

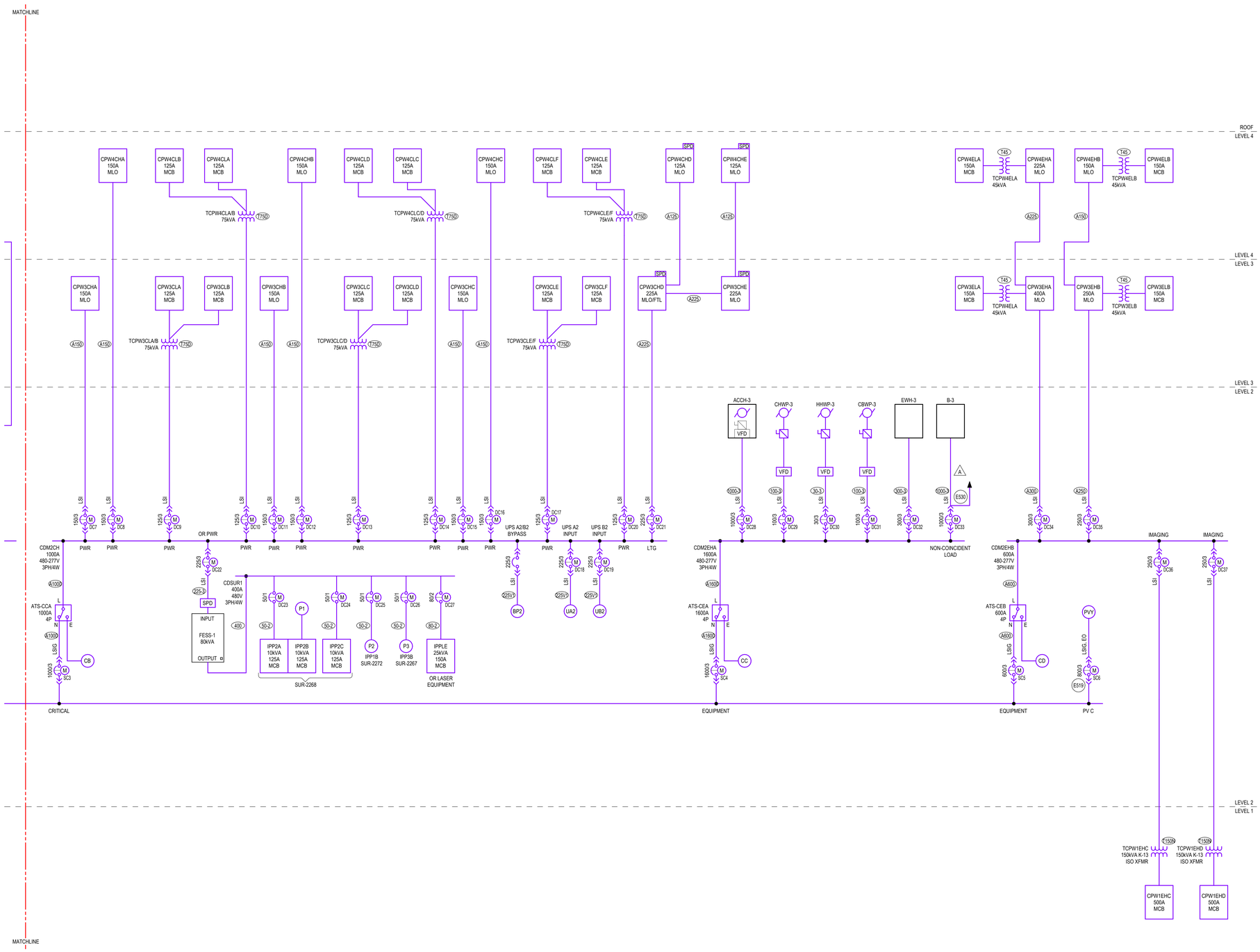

1 ONE LINE DIAGRAM - SES-C, 2 OF 2
SCALE: NOT TO SCALE

GENERAL SHEET NOTES

A. **BASE BUILD** SCOPE SHALL ONLY INCLUDE EMPTY CONDUITS OF FEEDERS SHOWN ON THIS SHEET WITH FEEDER TAGS.
B. **ADD ALTERNATE SCOPE** SHALL INCLUDE PV PANELS, CARPORTS, DC CONDUCTORS, INVERTERS, AC CONDUCTORS, AC COMBINER BOXES, PV DISTRIBUTION BOARDS.
C. SEE DRAWING E0.1 FOR ABBREVIATIONS, SYMBOLS, GENERAL NOTES.
D. THE CONTRACTOR SHALL COORDINATE EXACT LOCATION OF EQUIPMENT POWER CONNECTIONS WITH EQUIPMENT INSTALLER PRIOR TO ROUGH-IN.
E. COORDINATE FINAL LOCATION OF MECHANICAL EQUIPMENT AND ASSOCIATED DISCONNECT SWITCHES, STARTERS, VFDS, CONTROL POWER AND OTHER POWER REQUIREMENTS WITH DIV 23 AND MECHANICAL DRAWINGS.
F. SEE MECHANICAL EQUIPMENT SCHEDULE FOR ASSOCIATED OVERCURRENT DEVICES, DISCONNECT SWITCHES, STARTERS AND WIRES.
G. VOLTAGE DROP SHALL BE LIMITED TO LESS THAN 3% FOR ALL BRANCH CIRCUITS AND 2% FOR ALL FEEDERS.
H. CONTRACTOR SHALL COORDINATE AND FIELD VERIFY REQUIREMENT OF NEUTRAL CONDUCTOR FOR ALL EQUIPMENT AND PROVIDE NEUTRAL CONDUCTOR AS NECESSARY.
I. ALL LIFE SAFETY AND LIGHTING PANELBOARDS SHALL BE EQUIPPED WITH TYPE 2 SPD.
J. ALL AUTOMATIC TRANSFER SWITCHES SHALL BE 4 POLE AND EQUIPPED WITH BYPASS ISOLATION.
K. ALL UTILITY TRANSFORMERS DESCRIBED AS NAVOPACHE TRANSFORMER TO BE COORDINATED WITH UTILITY AND PROVIDED BY UTILITY. COORDINATE ALL FINAL REQUIREMENTS (A) AND AVAILABLE FAULT CURRENT CONTRIBUTIONS BASED ON SUPPLIED EQUIPMENT. BASIS OF DESIGN 2500KVA, AND 5%Z.
L. ELECTRICAL EQUIPMENT SHALL BE CONFIGURED AS FOLLOWS:
-SERVICE ENTRANCE SECTIONS - UL891 REAR CONNECTED SWITCHBOARD
-DISTRIBUTION SWITCHBOARDS WITH DRAW-OUT CIRCUIT BREAKERS - UL891 SWITCHBOARD, DRAWN-OUT MOLDED CASE CIRCUIT BREAKERS. (E)
-GENERATOR PARALLELING GEAR - UL1558 SWITCHGEAR

SHEET KEYNOTES

E519 PV CIRCUIT BREAKER SHALL BE LOCATED AT LAST BUSSED SPACE. PROVIDE PERMANENT IDENTIFICATION PLAQUE INDICATING THE FOLLOWING: PV POWER SOURCE - DO NOT RELOCATE THIS CIRCUIT BREAKER
(A)
E530 PROVIDE SHUNT TRIP CIRCUIT BREAKER FOR INTERFACE WITH BOILER EMERGENCY SHUTDOWN EPO SWITCHES. REFER TO EMP2.2.G FOR ADDITIONAL INFORMATION.

(X) FEEDER SCHEDULE

"A" DENOTES ALUMINUM CONDUCTORS, ALL OTHER CONDUCTORS SHALL BE COPPER

30-3	3#10 + 1#10 G, 3/4" C
50-2	2#6 + 1#10 G, 3/4" C
80-2	2#3 + 1#8 G, 1 1/4" C
100-3	3#1 + 1#8 G, 1 1/2" C
225-3	3#4/0 + 1#4 G, 2" C
225V1	4#250KCMIL + 1#3 G, 2 1/2" C
300-3	3#350KCMIL + 1#4 G, 3" C
400	2 SETS OF 4#3/0 + 1#3 G, (2) 2" C
1000-3	3 SETS OF 3#400KCMIL + 1#2/0 G, (3) 3" C
A125	4#2/0 + 1#6 G, 2" C
A150	4#3/0 + 1#4 G, 2" C
A225	4#300KCMIL + 1#2 G, 2 1/2" C
A250	4#350KCMIL + 1#2 G, 2 1/2" C
A300	4#500KCMIL + 1#2 G, 3" C
A600	2 SETS OF 4#500KCMIL + 1#2/0 G, (2) 3" C
A1000	3 SETS OF 4#600KCMIL + 1#4/0 G, (3) 3 1/2" C
A1600	5 SETS OF 4#600KCMIL + 1#350KCMIL G, (5) 3 1/2" C
T45	45KVA TRANSFORMER, 480-208Y/120V, 3PH PRIMARY FEEDER: 3#3 + 1#8 G, 1 1/4" C SECONDARY FEEDER: 4#1/0 + 1#6 G, 2" C BONDING JUMPERS & GROUNDING ELECTRODE CONDUCTOR: #6
T75D	75KVA TRANSFORMER, 480-208Y/120V, 3PH PRIMARY FEEDER: 3#1/0 + 1#6 G, 1 1/2" C SECONDARY FEEDERS: 4#1/0 + 1#2 G, 2" C TO EACH PANEL BONDING JUMPERS & GROUNDING ELECTRODE CONDUCTOR: #2
T150N	150KVA TRANSFORMER, 480-208Y/120V, 3PH PRIMARY FEEDER: 3#250KCMIL + 1#4 G, 2 1/2" C SECONDARY FEEDER: 2 SETS OF 3#250KCMIL, 1#500KCMIL N + 1/0 G, (2) 3" C BONDING JUMPERS & GROUNDING ELECTRODE CONDUCTOR: #1/0

INDIAN HEALTH SERVICE · IHS · 1955 · DEPARTMENT OF HEALTH & HUMAN SERVICES, USA

IHS Whiteriver Hospital

200 W Hospital Drive
Whiteriver, Arizona, 85941

IHS Project #: 131445
IHS Contract #: 75H70123R00008
IHS Award Date: 02/02/2024

BASED ON PROGRAM OF REQUIREMENTS DATED [**03/26/22**], POR AMENDMENT DATED [**02/03/25**], AND ON SCHEMATIC DRAWINGS APPROVED [**11/19/24**].

SMITHGROUP

455 NORTH THIRD STREET
SUITE 250
PHOENIX, AZ 85004
602.265.2200
smithgroup.com

ISSUED FOR	DATE
BID ADDENDUM-E	28MAY26
BID ADDENDUM-A	16APR26
FINAL CONSTRUCTION DOCUMENTS	05MAR26

SEALS AND SIGNATURES

Registered Professional Engineer (Electrical) CERTIFICATE NO. 54673 DANIEL L. PETERSON Date Signed 05-28-26 ARIZONA, U.S.A.
EXPIRES: 6-30-26

ELECTRICAL ONE LINE DIAGRAM - SES-C, 2 OF 2

Drawn By: Whittington Checked By: Baca
14904.000
PROJECT NUMBER

CD **E5.3.2**
SHEET NUMBER

Plot Date: 5/28/2026 12:09:07 PM Whittington

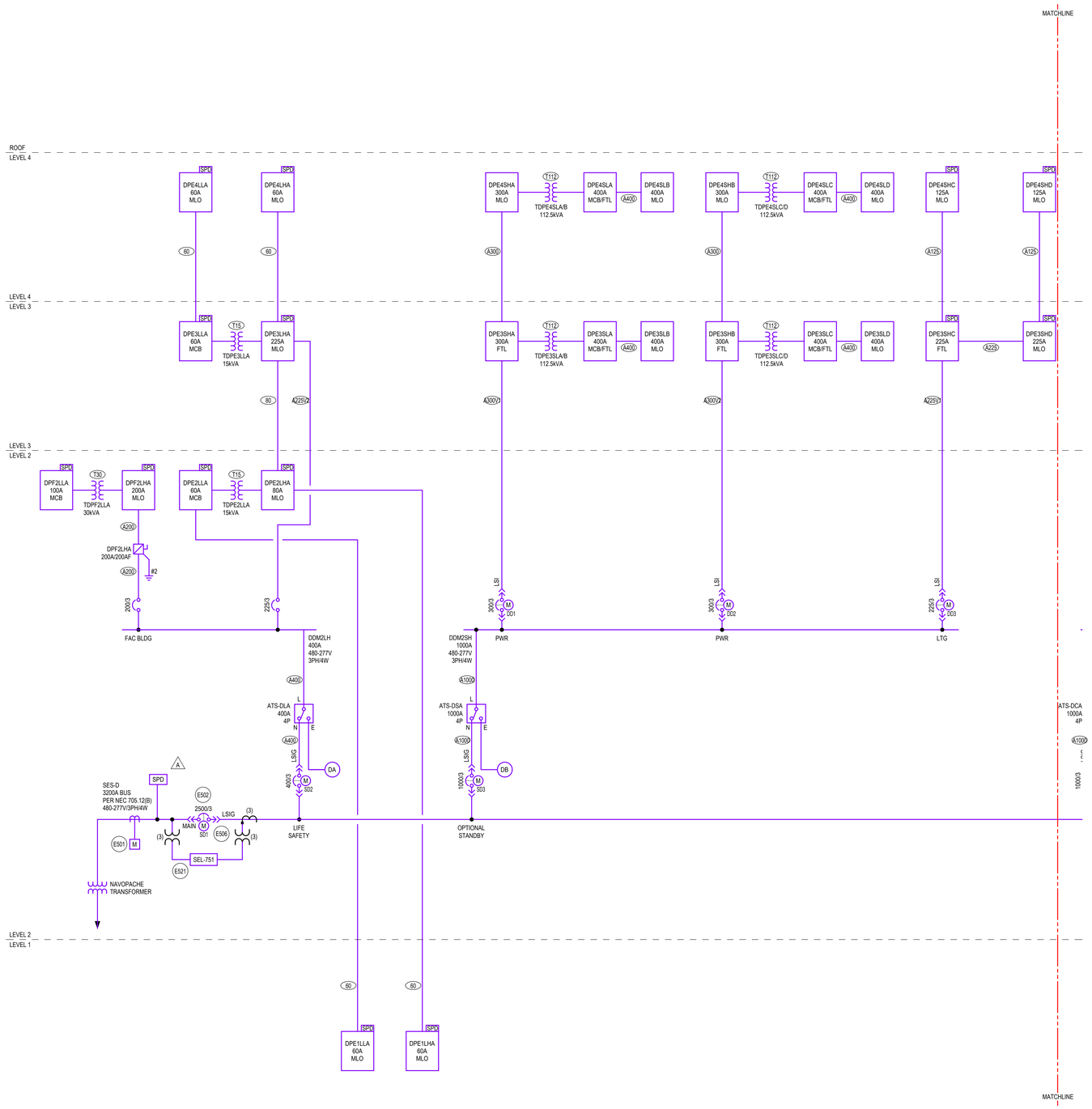

1 ONE LINE DIAGRAM - SES-D, 1 OF 2
SCALE: NOT TO SCALE

GENERAL SHEET NOTES

A. **BASE BUILD** SCOPE SHALL ONLY INCLUDE EMPTY CONDUITS OF FEEDERS SHOWN ON THIS SHEET WITH FEEDER TAGS.
B. **ADD ALTERNATE SCOPE** SHALL INCLUDE PV PANELS, CARPORTS, DC CONDUCTORS, INVERTERS, AC CONDUCTORS, AC COMBINER BOXES, PV DISTRIBUTION BOARDS.
C. SEE DRAWING E0.1 FOR ABBREVIATIONS, SYMBOLS, GENERAL NOTES.
D. THE CONTRACTOR SHALL COORDINATE EXACT LOCATION OF EQUIPMENT POWER CONNECTIONS WITH EQUIPMENT INSTALLER PRIOR TO ROUGH-IN.
E. COORDINATE FINAL LOCATION OF MECHANICAL EQUIPMENT AND ASSOCIATED DISCONNECT SWITCHES, STARTERS, VFDS, CONTROL POWER AND OTHER POWER REQUIREMENTS WITH DIV 23 AND MECHANICAL DRAWINGS.
F. SEE MECHANICAL EQUIPMENT SCHEDULE FOR ASSOCIATED OVERCURRENT DEVICES, DISCONNECT SWITCHES, STARTERS AND WIRES.
G. VOLTAGE DROP SHALL BE LIMITED TO LESS THAN 3% FOR ALL BRANCH CIRCUITS AND 2% FOR ALL FEEDERS.
H. CONTRACTOR SHALL COORDINATE AND FIELD VERIFY REQUIREMENT OF NEUTRAL CONDUCTOR FOR ALL EQUIPMENT AND PROVIDE NEUTRAL CONDUCTOR AS NECESSARY.
I. ALL LIFE SAFETY AND LIGHTING PANELBOARDS SHALL BE EQUIPPED WITH TYPE 2 SPD.
J. ALL AUTOMATIC TRANSFER SWITCHES SHALL BE 4 POLE AND EQUIPPED WITH BYPASS ISOLATION.
K. ALL UTILITY TRANSFORMERS DESCRIBED AS NAVOPACHE TRANSFORMER TO BE COORDINATED WITH UTILITY AND PROVIDED BY UTILITY. COORDINATE ALL FINAL REQUIREMENTS AND AVAILABLE FAULT CURRENT CONTRIBUTIONS BASED ON SUPPLIED EQUIPMENT. BASIS OF DESIGN 2500KVA, AND 5%Z. A
L. ELECTRICAL EQUIPMENT SHALL BE CONFIGURED AS FOLLOWS:
-SERVICE ENTRANCE SECTIONS - UL891 REAR CONNECTED SWITCHBOARD
-DISTRIBUTION SWITCHBOARDS WITH DRAW-OUT CIRCUIT BREAKERS - UL891 SWITCHBOARD, DRAWN-OUT MOLDED CASE CIRCUIT BREAKERS. E
-GENERATOR PARALLELING GEAR - UL1558 SWITCHGEAR

SHEET KEYNOTES

E501 NAVOPACHE UTILITY METER. METER SHALL BE EQUIPPED WITH CAPABILITY TO INTERFACE WITH BMS. ELECTRICAL CONTRACTOR SHALL PROVIDE REQUIRED CONDUIT AND COMMUNICATION WIRING FROM METER TO POINT OF INTERFACE WITH BMS.

E502 COMPLIANCE WITH "NEC 240.87 ARC ENERGY REDUCTION" REQUIRED. REDUCTION METHOD SHALL ALLOW FOR REQUIRED SELECTIVE DEVICE COORDINATION AND ARC FLASH REQUIREMENTS. REFER TO ELECTRICAL SPECIFICATIONS FOR ADDITIONAL INFORMATION.

E506 PROVIDE PERMANENT IDENTIFICATION PLAQUE INDICATING THE FOLLOWING: ELECTRICAL SERVICE #4 OF 5. GENERATORS LOCATED IN ELECTRICAL EQUIPMENT YARD, GENERATOR DISCONNECTS LOCATED IN ADJACENT ELECTRICAL ROOM IN GMDB. PV DISCONNECT LOCATED AT END OF THIS ELECTRICAL EQUIPMENT LINEUP.

E521 PROVIDE RELAY PROTECTION ELEMENTS REQUIRED BY UTILITY AND MULTIPLE GENERATOR AND PV MONITORING AND CONTROL SYSTEM MANUFACTURER. INTEGRATE SEL RELAY AND PROGRAMMING INTO MULTIPLE GENERATOR AND PV MONITORING SYSTEM AND CIRCUIT BREAKER. PROVIDE AND PROGRAM PROTECTION ELEMENT SET POINTS AND LOGIC WITHIN THE RELAY. REFER TO SEL-751 DETAIL FOR ADDITIONAL INFORMATION.

FEEDER SCHEDULE

"X" DENOTES ALUMINUM CONDUCTORS, ALL OTHER CONDUCTORS SHALL BE COPPER

60	4#4 + 1#10 G, 1 1/4" C
80	4#3 + 1#8 G, 1 1/4" C
A125	4#2/0 + 1#6 G, 2" C
A200	4#250KCMIL + 1#4 G, 2 1/2" C
A225	4#300KCMIL + 1#2 G, 2 1/2" C
A225V1	4#400KCMIL + 1#1/0 G, 2 1/2" C
A225V2	4#350KCMIL + 1#1/0 G, 2 1/2" C
A300	4#500KCMIL + 1#2 G, 3" C
A300V1	4#600KCMIL + 1#1 G, 3" C
A300V2	2 SETS OF 4#400KCMIL + 1#2/0 G, (2) 2 1/2" C
A400	2 SETS OF 4#250KCMIL + 1#1 G, (2) 2 1/2" C
A1000	3 SETS OF 4#600KCMIL + 1#4/0 G, (3) 3 1/2" C
T15	15KVA TRANSFORMER, 480-208Y/120V, 3PH PRIMARY FEEDER: 3#10 + 1#10 G, 3/4" C SECONDARY FEEDER: 4#4 + 1#8 G, 1 1/4" C BONDING JUMPERS & GROUNDING ELECTRODE CONDUCTOR: #8
T30	30KVA TRANSFORMER, 480-208Y/120V, 3PH PRIMARY FEEDER: 3#6 + 1#10 G, 3/4" C SECONDARY FEEDER: 4#1 + 1#6 G, 1 1/2" C BONDING JUMPERS & GROUNDING ELECTRODE CONDUCTOR: #6
T112	112.5KVA TRANSFORMER, 480-208Y/120V, 3PH PRIMARY FEEDER: 3#3/0 + 1#6 G, 2" C SECONDARY FEEDER: 2 SETS OF 4#3/0 + 1#2 G, (2) 2" C BONDING JUMPERS & GROUNDING ELECTRODE CONDUCTOR: #2

IHS Whiteriver Hospital

200 W Hospital Drive
Whiteriver, Arizona, 85941

IHS Project #: 131445
IHS Contract #: 75H70123R00008
IHS Award Date: 02/02/2024

BASED ON PROGRAM OF REQUIREMENTS DATED [**03/26/22**], POR AMENDMENT DATED [**02/03/25**], AND ON SCHEMATIC DRAWINGS APPROVED [**11/19/24**].

SMITHGROUP

455 NORTH THIRD STREET
SUITE 250
PHOENIX, AZ 85004
602.265.2200
smithgroup.com

ISSUED FOR	DATE
BID ADDENDUM-E	28MAY26
BID ADDENDUM-A	16APR26
FINAL CONSTRUCTION DOCUMENTS	05MAR26

SEALS AND SIGNATURES

Registered Professional Engineer (Electrical) CERTIFICATE NO. 54673 DANIEL L. PETERSON Date Signed 05-28-26 ARIZONA U.S.A.

EXPIRES: 6-30-28

ELECTRICAL ONE LINE DIAGRAM - SES-D, 1 OF 2

Drawn By: Whittington Checked By: Baca

14904.000

PROJECT NUMBER

CD

E5.4.1

SHEET NUMBER

Plot Date: 5/28/2026 12:09:11 PM Whittington

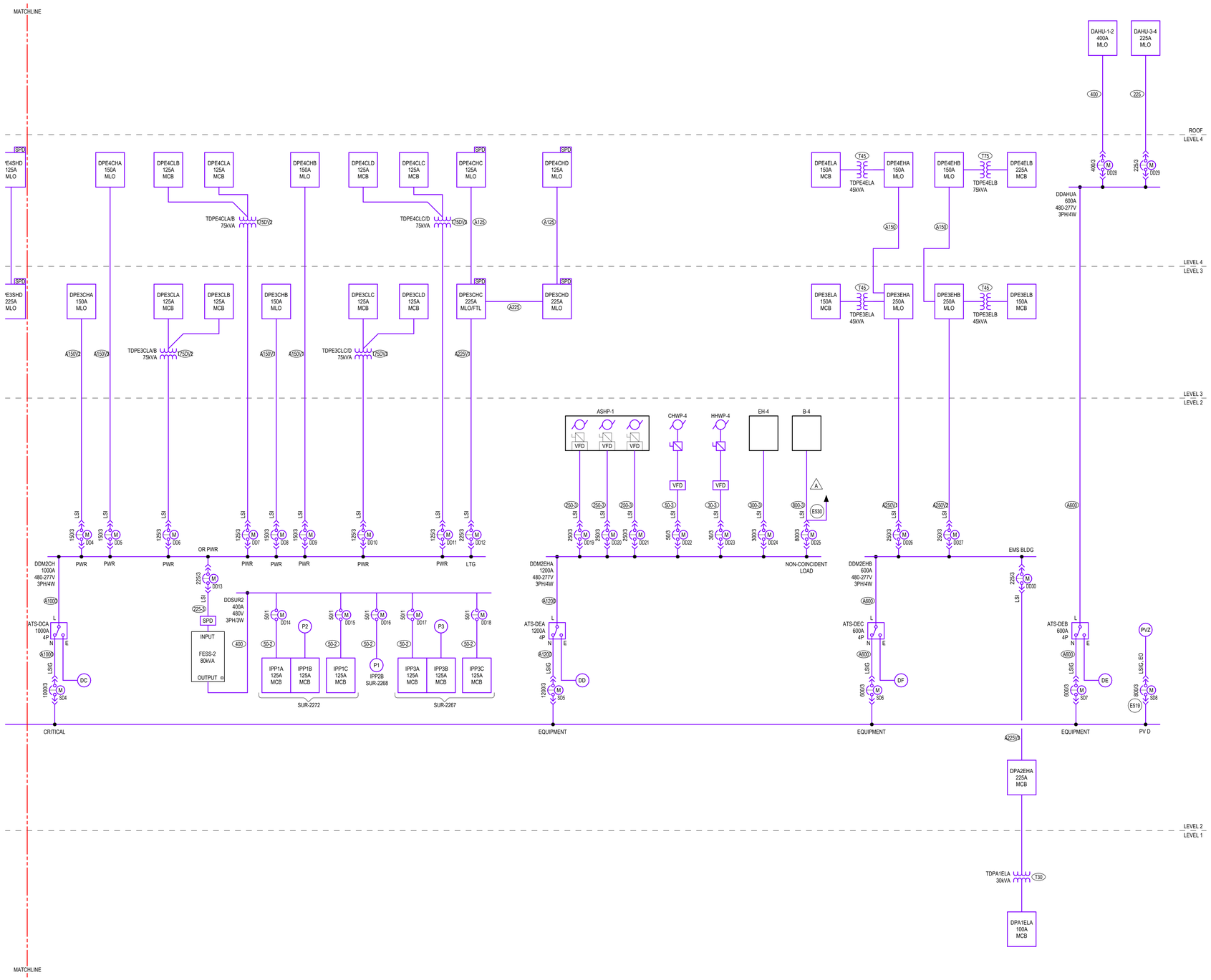

1 ONE LINE DIAGRAM - SES-D, 2 OF 2
SCALE: NOT TO SCALE

GENERAL SHEET NOTES

A. **BASE BUILD** SCOPE SHALL ONLY INCLUDE EMPTY CONDUITS OF FEEDERS SHOWN ON THIS SHEET WITH FEEDER TAGS.
B. **ADD ALTERNATE SCOPE** SHALL INCLUDE PV PANELS, CARPORTS, DC CONDUCTORS, INVERTERS, AC CONDUCTORS, AC COMBINER BOXES, PV DISTRIBUTION BOARDS.
C. SEE DRAWING E0.1 FOR ABBREVIATIONS, SYMBOLS, GENERAL NOTES.
D. THE CONTRACTOR SHALL COORDINATE EXACT LOCATION OF EQUIPMENT POWER CONNECTIONS WITH EQUIPMENT INSTALLER PRIOR TO ROUGH-IN.
E. COORDINATE FINAL LOCATION OF MECHANICAL EQUIPMENT AND ASSOCIATED DISCONNECT SWITCHES, STARTERS, VFDS, CONTROL POWER AND OTHER POWER REQUIREMENTS WITH DIV 23 AND MECHANICAL DRAWINGS.
F. SEE MECHANICAL EQUIPMENT SCHEDULE FOR ASSOCIATED OVERCURRENT DEVICES, DISCONNECT SWITCHES, STARTERS AND WIRES.
G. VOLTAGE DROP SHALL BE LIMITED TO LESS THAN 3% FOR ALL BRANCH CIRCUITS AND 2% FOR ALL FEEDERS.
H. CONTRACTOR SHALL COORDINATE AND FIELD VERIFY REQUIREMENT OF NEUTRAL CONDUCTOR FOR ALL EQUIPMENT AND PROVIDE NEUTRAL CONDUCTOR AS NECESSARY.
I. ALL LIFE SAFETY AND LIGHTING PANELBOARDS SHALL BE EQUIPPED WITH TYPE 2 SPD.
J. ALL AUTOMATIC TRANSFER SWITCHES SHALL BE 4 POLE AND EQUIPPED WITH BYPASS ISOLATION.
K. ALL UTILITY TRANSFORMERS DESCRIBED AS NAVOPACHE TRANSFORMER TO BE COORDINATED WITH UTILITY AND PROVIDED BY UTILITY. COORDINATE ALL FINAL REQUIREMENTS
A AND AVAILABLE FAULT CURRENT CONTRIBUTIONS BASED ON SUPPLIED EQUIPMENT. BASIS OF DESIGN 2500KVA, AND 5%Z.
L. ELECTRICAL EQUIPMENT SHALL BE CONFIGURED AS FOLLOWS:
-SERVICE ENTRANCE SECTIONS - UL891 REAR CONNECTED SWITCHBOARD
-DISTRIBUTION SWITCHBOARDS WITH DRAW-OUT CIRCUIT BREAKERS - UL891 SWITCHBOARD, DRAW-OUT MOLDED CASE CIRCUIT BREAKERS
-GENERATOR PARALLELING GEAR - UL1558 SWITCHGEAR E

SHEET KEYNOTES

E519 PV CIRCUIT BREAKER SHALL BE LOCATED AT LAST BUSSED SPACE. PROVIDE PERMANENT IDENTIFICATION PLAQUE INDICATING THE FOLLOWING: PV POWER SOURCE - DO NOT RELOCATE THIS CIRCUIT BREAKER
A
E530 PROVIDE SHUNT TRIP CIRCUIT BREAKER FOR INTERFACE WITH BOILER EMERGENCY SHUTDOWN EPO SWITCHES. REFER TO EMP2.2.G FOR ADDITIONAL INFORMATION.

FEEDER SCHEDULE

(X) "X" DENOTES ALUMINUM CONDUCTORS, ALL OTHER CONDUCTORS SHALL BE COPPER

30-3	3#10 + 1#10 G, 3/4" C
50-2	2#6 + 1#10 G, 3/4" C
50-3	3#6 + 1#10 G, 3/4" C
225	4#4/0 + 1#4 G, 2 1/2" C
225-3	3#4/0 + 1#4 G, 2" C
250-3	3#250KCMIL + 1#4 G, 2 1/2" C
300-3	3#350KCMIL + 1#4 G, 3" C
400	2 SETS OF 4#3/0 + 1#3 G, (2) 2" C
800-3	3 SETS OF 3#300KCMIL + 1#1/0 G, (3) 3" C
A125	4#2/0 + 1#6 G, 2" C
A150	4#3/0 + 1#4 G, 2" C
A150V1	4#400KCMIL + 1#1/0 G, 2-1/2" C
A150V2	4#250KCMIL + 1#2 G, 2-1/2" C
A150V3	4#300KCMIL + 1#1 G, 2-1/2" C
A225	4#300KCMIL + 1#2 G, 2 1/2" C
A225V1	4#400KCMIL + 1#1/0 G, 2 1/2" C
A225V3	4#500KCMIL + 1#2/0 G, 3" C
A250V1	4#400KCMIL + 1#1 G, 2 1/2" C
A250V2	4#600KCMIL + 1#2/0 G, 3" C
A600	2 SETS OF 4#500KCMIL + 1#2/0 G, (2) 3" C
A1000	3 SETS OF 4#600KCMIL + 1#4/0 G, (3) 3 1/2" C
A1200	4 SETS OF 4#500KCMIL + 1#250KCMIL G, (4) 3" C
T30	30KVA TRANSFORMER, 480-208Y/120V, 3PH PRIMARY FEEDER: 3#6 + 1#10 G, 3/4" C SECONDARY FEEDER: 4#1 + 1#6 G, 1 1/2" C BONDING JUMPERS & GROUNDING ELECTRODE CONDUCTOR: #6
T45	45KVA TRANSFORMER, 480-208Y/120V, 3PH PRIMARY FEEDER: 3#3 + 1#8 G, 1 1/4" C SECONDARY FEEDER: 4#1/0 + 1#6 G, 2" C BONDING JUMPERS & GROUNDING ELECTRODE CONDUCTOR: #6
T75	75KVA TRANSFORMER, 480-208Y/120V, 3PH PRIMARY FEEDER: 3#1/0 + 1#6 G, 1 1/2" C SECONDARY FEEDER: 4#4/0 + 1#2 G, 2 1/2" C BONDING JUMPERS & GROUNDING ELECTRODE CONDUCTOR: #2
T75DV2	75KVA TRANSFORMER, 480-208Y/120V, 3PH PRIMARY FEEDER: 3#2/0 + 1#4 G, 1 1/2" C SECONDARY FEEDERS: 4#1/0 + 1#2 G, 2" C TO EACH PANEL BONDING JUMPERS & GROUNDING ELECTRODE CONDUCTOR: #2
T75DV3	75KVA TRANSFORMER, 480-208Y/120V, 3PH PRIMARY FEEDER: 3#4/0 + 1#3 G, 2" C SECONDARY FEEDERS: 4#1/0 + 1#2 G, 2" C TO EACH PANEL BONDING JUMPERS & GROUNDING ELECTRODE CONDUCTOR: #2

DEPARTMENT OF HEALTH & HUMAN SERVICES, USA
INDIAN HEALTH SERVICE · IHS · 1955

IHS Whiteriver Hospital

200 W Hospital Drive
Whiteriver, Arizona, 85941

IHS Project #: 131445
IHS Contract #: 75H70123R00008
IHS Award Date: 02/02/2024

BASED ON PROGRAM OF REQUIREMENTS DATED [**03/26/22**], POR AMENDMENT DATED [**02/03/25**], AND ON SCHEMATIC DRAWINGS APPROVED [**11/19/24**].

SMITHGROUP

455 NORTH THIRD STREET
SUITE 250
PHOENIX, AZ 85004
602.265.2200
smithgroup.com

ISSUED FOR	DATE
BID ADDENDUM-E	28MAY26
BID ADDENDUM-A	16APR26
FINAL CONSTRUCTION DOCUMENTS	05MAR26

SEALS AND SIGNATURES

Registered Professional Engineer (Electrical) CERTIFICATE NO. 54673 DANIEL L. PETERSON Date Signed 05-28-26 ARIZONA, U.S.A.
EXPIRES: 6-30-28

ELECTRICAL ONE LINE DIAGRAM - SES-D, 2 OF 2

Drawn By: Whittington Checked By: Baca

PROJECT NUMBER 14904.000

CD

SHEET NUMBER **E5.4.2**

Plot Date: 5/28/2026 12:09:16 PM Whittington

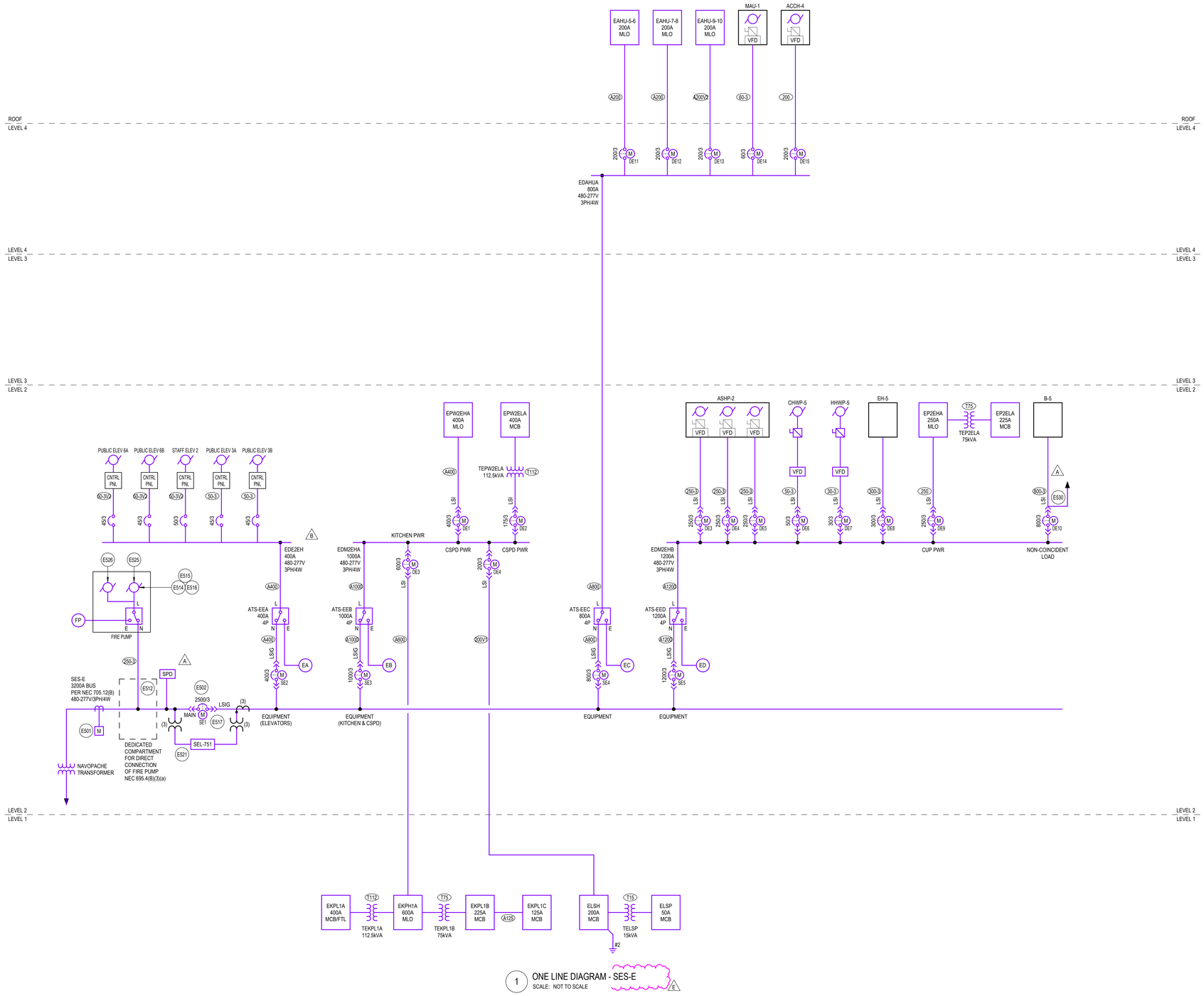

1 ONE LINE DIAGRAM - SES-E
SCALE: NOT TO SCALE

GENERAL SHEET NOTES

A. **BASE BUILD** SCOPE SHALL ONLY INCLUDE EMPTY CONDUITS OF FEEDERS SHOWN ON THIS SHEET WITH FEEDER TAGS.
B. **ADD ALTERNATE SCOPE** SHALL INCLUDE PV PANELS, CARPORTS, DC CONDUCTORS, INVERTERS, AC CONDUCTORS, AC COMBINER BOXES, PV DISTRIBUTION BOARDS.
C. SEE DRAWING E0.1 FOR ABBREVIATIONS, SYMBOLS, GENERAL NOTES.
D. THE CONTRACTOR SHALL COORDINATE EXACT LOCATION OF EQUIPMENT POWER CONNECTIONS WITH EQUIPMENT INSTALLER PRIOR TO ROUGH-IN.
E. COORDINATE FINAL LOCATION OF MECHANICAL EQUIPMENT AND ASSOCIATED DISCONNECT SWITCHES, STARTERS, VFDS, CONTROL POWER AND OTHER POWER REQUIREMENTS WITH DIV 23 AND MECHANICAL DRAWINGS.
F. SEE MECHANICAL EQUIPMENT SCHEDULE FOR ASSOCIATED OVERCURRENT DEVICES, DISCONNECT SWITCHES, STARTERS AND WIRES.
G. VOLTAGE DROP SHALL BE LIMITED TO LESS THAN 3% FOR ALL BRANCH CIRCUITS AND 2% FOR ALL FEEDERS.
H. CONTRACTOR SHALL COORDINATE AND FIELD VERIFY REQUIREMENT OF NEUTRAL CONDUCTOR FOR ALL EQUIPMENT AND PROVIDE NEUTRAL CONDUCTOR AS NECESSARY.
I. ALL LIFE SAFETY AND LIGHTING PANELBOARDS SHALL BE EQUIPPED WITH TYPE 2 SPD.
J. ALL AUTOMATIC TRANSFER SWITCHES SHALL BE 4 POLE AND EQUIPPED WITH BYPASS ISOLATION.
K. ALL UTILITY TRANSFORMERS DESCRIBED AS NAVOPACHE TRANSFORMER TO BE COORDINATED WITH UTILITY AND PROVIDED BY UTILITY. COORDINATE ALL FINAL REQUIREMENTS AND AVAILABLE FAULT CURRENT CONTRIBUTIONS BASED ON SUPPLIED EQUIPMENT. BASIS OF DESIGN 2500KVA, AND 5%Z. A
L. ELECTRICAL EQUIPMENT SHALL BE CONFIGURED AS FOLLOWS:
-SERVICE ENTRANCE SECTIONS - UL891 REAR CONNECTED SWITCHBOARD
-DISTRIBUTION SWITCHBOARDS WITH DRAW-OUT CIRCUIT BREAKERS - UL891 SWITCHBOARD, DRAW-OUT MOLDED CASE CIRCUIT BREAKERS. E
-GENERATOR PARALLELING GEAR - UL1558 SWITCHGEAR

◯ SHEET KEYNOTES

E501 NAVOPACHE UTILITY METER. METER SHALL BE EQUIPPED WITH CAPABILITY TO INTERFACE WITH BMS. ELECTRICAL CONTRACTOR SHALL PROVIDE REQUIRED CONDUIT AND COMMUNICATION WIRING FROM METER TO POINT OF INTERFACE WITH BMS.

E502 COMPLIANCE WITH "NEC 240.87 ARC ENERGY REDUCTION" REQUIRED. REDUCTION METHOD SHALL ALLOW FOR REQUIRED SELECTIVE DEVICE COORDINATION AND ARC FLASH REQUIREMENTS. REFER TO ELECTRICAL SPECIFICATIONS FOR ADDITIONAL INFORMATION.

E512 DIRECT CONNECTION OF FIRE PUMP AS ALLOWED BY NEC 695.3(A)(1) AND IN COMPLIANCE WITH NEC 695.4(A).

E514 FIRE PUMP CONTROLLER SHALL BE MONITORED BY THE FIRE ALARM SYSTEM. LOSS OF NORMAL POWER SHALL ACTIVATE SUPERVISORY ALARM AS FACP.

E515 PROVIDE CONTROL WIRING IN COMPLIANCE WITH NEC 695.14. BMS MONITORING SHALL BE PROVIDED.

E516 LISTED SINGLE POINT NORMAL & EMERGENCY CONNECTION (WITH INTEGRAL AUTOMATIC TRANSFER SWITCH). INTERNAL WIRING FROM CONTROLLER(S) TO PUMP MOTOR(S) SHALL BE RUN IN CONDUIT TYPE AS SPECIFIED BY NEC 695.6(D) & (F). ALL INTERNAL WIRING SHALL BE PROVIDED BY EQUIPMENT MANUFACTURER. ALL REQUIRED MARKINGS & APPROPRIATE PLAQUES SHALL BE PROVIDED IN COMPLIANCE WITH THE NEC.

E517 PROVIDE PERMANENT IDENTIFICATION PLAQUE INDICATING THE FOLLOWING: ELECTRICAL SERVICE #5 OF 5. GENERATORS LOCATED IN ELECTRICAL EQUIPMENT YARD, GENERATOR DISCONNECTS LOCATED IN ADJACENT ELECTRICAL ROOM IN GMDB. PV DISCONNECT LOCATED AT END OF THIS ELECTRICAL EQUIPMENT LINEUP.

E521 PROVIDE RELAY PROTECTION ELEMENTS REQUIRED BY UTILITY AND MULTIPLE GENERATOR AND PV MONITORING AND CONTROL SYSTEM MANUFACTURER. INTEGRATE SEL RELAY AND PROGRAMMING INTO MULTIPLE GENERATOR AND PV MONITORING SYSTEM AND CIRCUIT BREAKER. PROVIDE AND PROGRAM PROTECTION ELEMENT SET POINTS AND LOGIC WITHIN THE RELAY. REFER TO SEL-751 DETAIL FOR ADDITIONAL INFORMATION.

E525 ELECTRIC FIRE PUMP BY FIRE SUPPRESSION DELEGATED DESIGN. PROVIDED WITH ATS INTEGRAL TO PUMP CONTROLLER WITH INTEGRAL DISCONNECT. PROVIDE CONNECTION AS SHOWN FOR UP TO 150HP 480V/3-PHASE ELECTRIC PUMP.

E526 ELECTRIC FIRE BOOSTER JOCKEY PUMP BY FIRE SUPPRESSION DELEGATED DESIGN. PROVIDED WITH PUMP CONTROLLER WITH INTEGRAL DISCONNECT. PROVIDE CONNECTION AS SHOWN FOR UP TO 1.5HP 480V/3-PHASE ELECTRIC PUMP. TAP SHALL ORIGINATE WITHIN FIRE PUMP ROOM AND BE LESS THAN 10FT CABLE LENGTH TO CONTROLLER PER TAP RULES. A

E530 PROVIDE SHUNT TRIP CIRCUIT BREAKER FOR INTERFACE WITH BOILER EMERGENCY SHUTDOWN EPO SWITCHES. REFER TO EMP2.2.G FOR ADDITIONAL INFORMATION.

(X) FEEDER SCHEDULE

X DENOTES ALUMINUM CONDUCTORS, ALL OTHER CONDUCTORS SHALL BE COPPER

30-3	3#10 + 1#10 G, 3/4" C
50-3	3#6 + 1#10 G, 3/4" C
50-3V2	3#4 + 1#6 G, 1" C
60-3	3#4 + 1#10 G, 1 1/4" C
200	4#3/0 + 1#6 G, 2" C
200V1	2 SETS OF 4#300KCMIL + 1#1/0 G, (2) 3" C
250	4#250KCMIL + 1#4 G, 3"C
250-3	3#250KCMIL + 1#4 G, 2 1/2" C
300-3	3#350KCMIL + 1#4 G, 3" C
800-3	3 SETS OF 3#300KCMIL + 1#1/0 G, (3) 3" C
A125	4#2/0 + 1#6 G, 2" C
A200	4#250KCMIL + 1#4 G, 2 1/2" C
A200V2	4#300KCMIL + 1#3 G, 2 1/2" C
A400	2 SETS OF 4#250KCMIL + 1#1 G, (2) 2 1/2" C
A600	2 SETS OF 4#500KCMIL + 1#2/0 G, (2) 3" C
A800	3 SETS OF 4#400KCMIL + 1#3/0 G, (3) 3" C
A1000	3 SETS OF 4#600KCMIL + 1#4/0 G, (3) 3 1/2" C
A1200	4 SETS OF 4#500KCMIL + 1#250KCMIL G, (4) 3" C
T15	15KVA TRANSFORMER, 480-208Y/120V, 3PH PRIMARY FEEDER: 3#10 + 1#10 G, 3/4" C SECONDARY FEEDER: 4#4 + 1#8 G, 1 1/4" C BONDING JUMPERS & GROUNDING ELECTRODE CONDUCTOR: #8
T75	75KVA TRANSFORMER, 480-208Y/120V, 3PH PRIMARY FEEDER: 3#1/0 + 1#6 G, 1 1/2" C SECONDARY FEEDER: 4#4/0 + 1#2 G, 2 1/2" C BONDING JUMPERS & GROUNDING ELECTRODE CONDUCTOR: #2
T112	112.5KVA TRANSFORMER, 480-208Y/120V, 3PH PRIMARY FEEDER: 3#3/0 + 1#6 G, 2" C SECONDARY FEEDER: 2 SETS OF 4#3/0 + 1#2 G, (2) 2" C BONDING JUMPERS & GROUNDING ELECTRODE CONDUCTOR: #2

IHS Whiteriver Hospital

200 W Hospital Drive
Whiteriver, Arizona, 85941

IHS Project #: 131445
IHS Contract #: 75H70123R00008
IHS Award Date: 02/02/2024

BASED ON PROGRAM OF REQUIREMENTS DATED [**03/26/22**], POR AMENDMENT DATED [**02/03/25**], AND ON SCHEMATIC DRAWINGS APPROVED [**11/19/24**].

SMITHGROUP

455 NORTH THIRD STREET
SUITE 250
PHOENIX, AZ 85004
602.265.2200
smithgroup.com

ISSUED FOR	DATE
BID ADDENDUM-E	28MAY26
BID ADDENDUM-B	30APR26
BID ADDENDUM-A	16APR26
FINAL CONSTRUCTION DOCUMENTS	09MAR26

SEALS AND SIGNATURES

Registered Professional Engineer (Electrical)
CERTIFICATE NO. 54673
DANIEL L. PETERSON
Date Signed 05-28-26
ARIZONA, U.S.A.
EXPIRES: 6-30-26

ELECTRICAL ONE LINE DIAGRAM - SES-E

Drawn By: Whittington Checked By: Baca

14904.000

PROJECT NUMBER

CD **E5.5.1**

SHEET NUMBER

Plot Date: 5/28/2026 12:09:17 PM Whittington

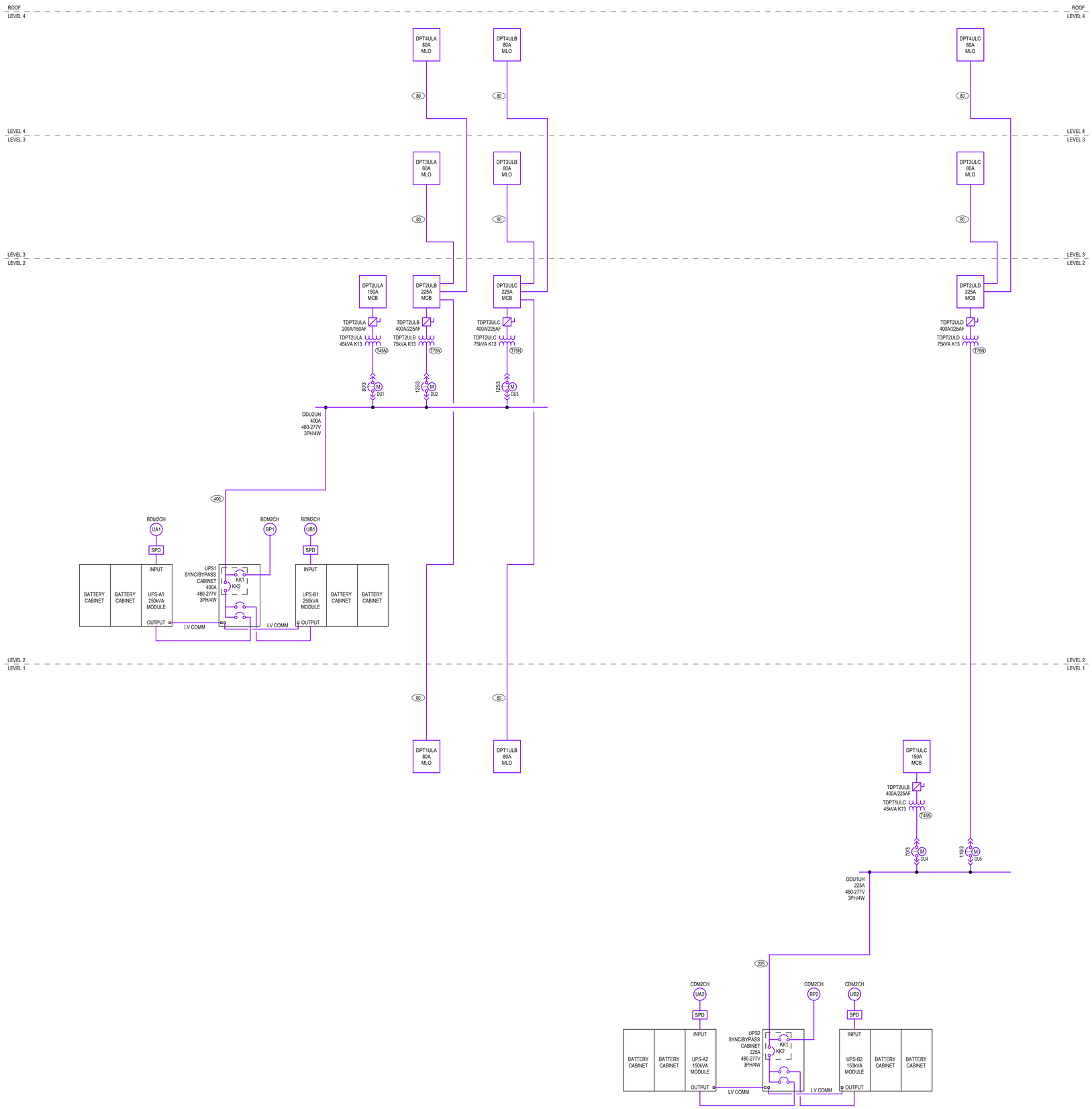

1 ONE LINE DIAGRAM - UPS
SCALE: NOT TO SCALE

GENERAL SHEET NOTES

A. **BASE BUILD** SCOPE SHALL ONLY INCLUDE EMPTY CONDUITS OF FEEDERS SHOWN ON THIS SHEET WITH FEEDER TAGS.
B. **ADD ALTERNATE SCOPE** SHALL INCLUDE PV PANELS, CARPORTS, DC CONDUCTORS, INVERTERS, AC CONDUCTORS, AC COMBINER BOXES, PV DISTRIBUTION BOARDS.
C. SEE DRAWING E0.1 FOR ABBREVIATIONS, SYMBOLS, GENERAL NOTES.
D. THE CONTRACTOR SHALL COORDINATE EXACT LOCATION OF EQUIPMENT POWER CONNECTIONS WITH EQUIPMENT INSTALLER PRIOR TO ROUGH-IN.
E. COORDINATE FINAL LOCATION OF MECHANICAL EQUIPMENT AND ASSOCIATED DISCONNECT SWITCHES, STARTERS, VFDS, CONTROL POWER AND OTHER POWER REQUIREMENTS WITH DIV 23 AND MECHANICAL DRAWINGS.
F. SEE MECHANICAL EQUIPMENT SCHEDULE FOR ASSOCIATED OVERCURRENT DEVICES, DISCONNECT SWITCHES, STARTERS AND WIRES.
G. VOLTAGE DROP SHALL BE LIMITED TO LESS THAN 3% FOR ALL BRANCH CIRCUITS AND 2% FOR ALL FEEDERS.
H. CONTRACTOR SHALL COORDINATE AND FIELD VERIFY REQUIREMENT OF NEUTRAL CONDUCTOR FOR ALL EQUIPMENT AND PROVIDE NEUTRAL CONDUCTOR AS NECESSARY.
I. ALL LIFE SAFETY AND LIGHTING PANELBOARDS SHALL BE EQUIPPED WITH TYPE 2 SPD.
J. ALL AUTOMATIC TRANSFER SWITCHES SHALL BE 4 POLE AND EQUIPPED WITH BYPASS ISOLATION.
K. ALL UTILITY TRANSFORMERS DESCRIBED AS NAVOPACHE TRANSFORMER TO BE COORDINATED WITH UTILITY AND PROVIDED BY UTILITY. COORDINATE ALL FINAL REQUIREMENTS AND AVAILABLE FAULT CURRENT CONTRIBUTIONS BASED ON SUPPLIED EQUIPMENT. BASIS OF DESIGN 2500KVA, AND 5%Z. A
L. ELECTRICAL EQUIPMENT SHALL BE CONFIGURED AS FOLLOWS:
-SERVICE ENTRANCE SECTIONS - UL891 REAR CONNECTED SWITCHBOARD
-DISTRIBUTION SWITCHBOARDS WITH DRAW-OUT CIRCUIT BREAKERS - UL891 SWITCHBOARD, DRAW-OUT MOLDED CASE CIRCUIT BREAKERS. E
-GENERATOR PARALLELING GEAR - UL1558 SWITCHGEAR

SHEET KEYNOTES

FEEDER SCHEDULE

80	4#3 + 1#8 G, 1 1/4" C
225	4#4/0 + 1#4 G, 2 1/2" C
400	2 SETS OF 4#3/0 + 1#3 G, (2) 2" C
T45N	45KVA TRANSFORMER, 480-208Y/120V, 3PH PRIMARY FEEDER: 3#3 + 1#8 G, 1 1/4" C SECONDARY FEEDER: 3#1/0, 1#4/0 N + 1#6 G, 2" C BONDING JUMPERS & GROUNDING ELECTRODE CONDUCTOR: #6
T75N	75KVA TRANSFORMER, 480-208Y/120V, 3PH PRIMARY FEEDER: 3#1/0 + 1#6 G, 1 1/2" C SECONDARY FEEDER: 3#4/0, 1#500KCMIL N + 1#2 G, 2 1/2" C BONDING JUMPERS & GROUNDING ELECTRODE CONDUCTOR: #2

IHS Whiteriver Hospital

200 W Hospital Drive
Whiteriver, Arizona, 85941

IHS Project #: 131445
IHS Contract #: 75H70123R00008
IHS Award Date: 02/02/2024

BASED ON PROGRAM OF REQUIREMENTS DATED [**03/26/22**], POR AMENDMENT DATED [**02/03/25**], AND ON SCHEMATIC DRAWINGS APPROVED [**11/19/24**].

SMITHGROUP

455 NORTH THIRD STREET
SUITE 250
PHOENIX, AZ 85004
602.265.2200
smithgroup.com

ISSUED FOR	DATE
BID ADDENDUM-E	28MAY26
BID ADDENDUM-A	16APR26
FINAL CONSTRUCTION DOCUMENTS	05MAR26

SEALS AND SIGNATURES

Registered Professional Engineer (Electrical)
CERTIFICATE NO. 54673
DANIEL L. PETERSON
Date Signed 05-28-26
ARIZONA, U.S.A.
EXPIRES: 6-30-28

ELECTRICAL ONE LINE DIAGRAM - UPS

Drawn By: Whittington Checked By: Baca

14904.000
PROJECT NUMBER

CD **E5.6**
SHEET NUMBER

Plot Date: 5/28/2026 12:09:21 PM Whittington

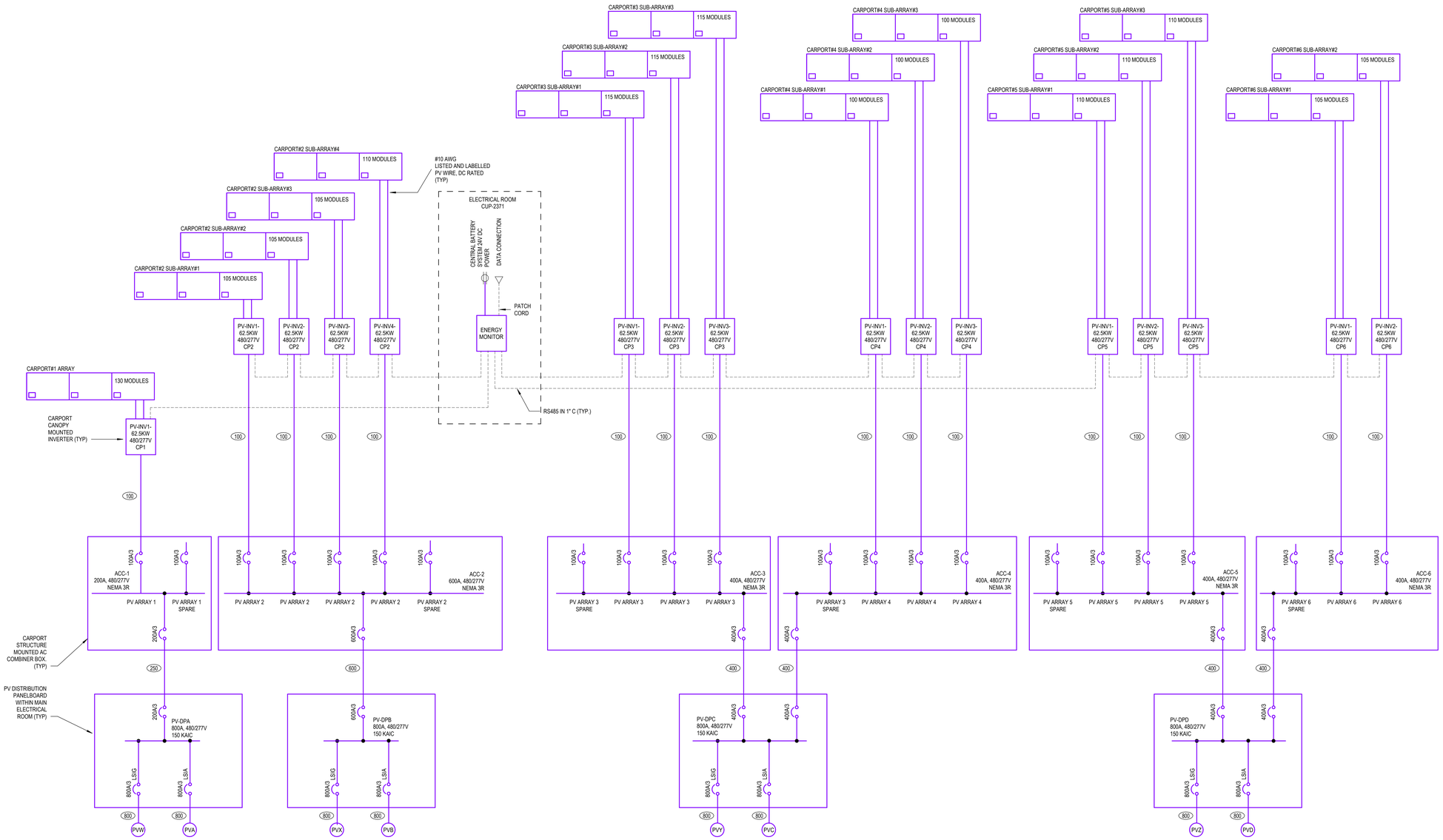

PV SYSTEM SUMMARY			
CARPORT#	QUANTITY OF MODULES	MODULE RATING (W)	ARRAY DC KW RATING
1	130	590	77
2	425	590	251
3	345	590	204
4	300	590	177
5	330	590	195
6	210	590	124
TOTAL DC NAMEPLATE RATING (MW)			1.03
TOTAL AC NAMEPLATE RATING (MW)			1.00
DC/AC RATIO			1.03

NOTES:
1. THE PHOTOVOLTAIC SYSTEM DESIGN IS IN ACCORDANCE WITH THE NEC. THE PV SYSTEM SHALL CONFORM TO THE REQUIREMENTS OF NEC SECTION 690. CONSULT WITH AHJ AND UTILITY CO. FOR ADDITIONAL REQUIREMENTS PRIOR TO INSTALLATION.
2. ACTUAL ROUTING OF ALL CONDUITS, LOCATION OF ALL EQUIPMENT AND COORDINATION WITH OTHER TRADES SHALL BE THE RESPONSIBILITY OF THE INSTALLING CONTRACTOR. ENSURE THE WORK OF OTHER TRADES DOES NOT SHADE THE PV ARRAY. PROVIDE PULL BOXES AND HANDHOLES AS REQUIRED BY THE NEC AND IN COORDINATION WITH SPECIFICATIONS.
3. OPEN WIRING CONNECTING THE INDIVIDUAL PV MODULES SHALL BE PERMITTED. TRANSITION TO CONDUIT WHEN CONDUCTORS ROUTE AWAY FROM THE ARRAY AND UPON ENTERING THE BUILDING. CONDUIT SHALL BE EMT OR RIGID METAL PER THE SPECIFICATIONS. PVC CONDUIT SHALL NOT BE PERMITTED.
4. INCREASE WIRE SIZE TO COMPENSATE FOR POTENTIAL VOLTAGE DROP, ELEVATED AMBIENT TEMPERATURES, EXPOSURE TO SUNLIGHT AND CONDUCTOR BUNDLING WHERE REQUIRED.
5. PV SYSTEM CIRCUIT BREAKERS SHALL BE SUITABLE FOR BACK FED OPERATION. LOCATE BREAKER ON THE OPPOSITE END OF BUS BAR FROM THE MAIN BREAKER IN ACCORDANCE WITH NEC ARTICLE 705.12 FOR A LOAD SIDE INTERCONNECTION.
6. PROPERLY WATER TIGHT SEAL ALL PENETRATIONS. MINIMIZE THE QUANTITY OF PENETRATIONS, WHERE POSSIBLE.
7. PROVIDE SUITABLE CABLE MANAGEMENT FOR WIRING DIRECTLY BENEATH THE ARRAY. PLASTIC CABLE TIES ARE STRICTLY PROHIBITED. REFER TO SPECIFICATION FOR ADDITIONAL INFORMATION.

1 ONE LINE DIAGRAM - SOLAR
SCALE: NOT TO SCALE

GENERAL SHEET NOTES

A. **BASE BUILD** SCOPE SHALL ONLY INCLUDE EMPTY CONDUITS OF FEEDERS SHOWN ON THIS SHEET WITH FEEDER TAGS.
B. **ADD ALTERNATE SCOPE** SHALL INCLUDE PV PANELS, CARPORTS, DC CONDUCTORS, INVERTERS, AC CONDUCTORS, AC COMBINER BOXES, PV DISTRIBUTION BOARDS.
C. SEE DRAWING E0.1 FOR ABBREVIATIONS, SYMBOLS, GENERAL NOTES.
D. THE CONTRACTOR SHALL COORDINATE EXACT LOCATION OF EQUIPMENT POWER CONNECTIONS WITH EQUIPMENT INSTALLER PRIOR TO ROUGH-IN.
E. COORDINATE FINAL LOCATION OF MECHANICAL EQUIPMENT AND ASSOCIATED DISCONNECT SWITCHES, STARTERS, VFDS, CONTROL POWER AND OTHER POWER REQUIREMENTS WITH DIV 23 AND MECHANICAL DRAWINGS.
F. SEE MECHANICAL EQUIPMENT SCHEDULE FOR ASSOCIATED OVERCURRENT DEVICES, DISCONNECT SWITCHES, STARTERS AND WIRES.
G. VOLTAGE DROP SHALL BE LIMITED TO LESS THAN 3% FOR ALL BRANCH CIRCUITS AND 2% FOR ALL FEEDERS.
H. CONTRACTOR SHALL COORDINATE AND FIELD VERIFY REQUIREMENT OF NEUTRAL CONDUCTOR FOR ALL EQUIPMENT AND PROVIDE NEUTRAL CONDUCTOR AS NECESSARY.
I. ALL LIFE SAFETY AND LIGHTING PANELBOARDS SHALL BE EQUIPPED WITH TYPE 2 SPD.
J. ALL AUTOMATIC TRANSFER SWITCHES SHALL BE 4 POLE AND EQUIPPED WITH BYPASS ISOLATION.
K. ALL UTILITY TRANSFORMERS DESCRIBED AS NAVOPACHE TRANSFORMER TO BE COORDINATED WITH UTILITY AND PROVIDED BY UTILITY. COORDINATE ALL FINAL REQUIREMENTS AND AVAILABLE FAULT CURRENT CONTRIBUTIONS BASED ON SUPPLIED EQUIPMENT. BASIS OF DESIGN 2500KVA, AND 5%Z. A
L. ELECTRICAL EQUIPMENT SHALL BE CONFIGURED AS FOLLOWS:
-SERVICE ENTRANCE SECTIONS - UL891 REAR CONNECTED SWITCHBOARD
-DISTRIBUTION SWITCHBOARDS WITH DRAW-OUT CIRCUIT BREAKERS - UL891 SWITCHBOARD, DRAWN-OUT MOLDED CASE CIRCUIT BREAKERS. E
-GENERATOR PARALLELING GEAR - UL1558 SWITCHGEAR

SHEET KEYNOTES

FEEDER SCHEDULE

100	4#1 + 1#8 G, 1 1/2" C
250	4#250KCMIL + 1#4 G, 3"C
400	2 SETS OF 4#530 + 1#3 G, (2) 2" C
600	2 SETS OF 4#350KCMIL + 1#1 G, (2) 3" C
800	3 SETS OF 4#300KCMIL + 1#1/0 G, (3) 3" C

IHS Whiteriver Hospital

200 W Hospital Drive
Whiteriver, Arizona, 85941

IHS Project #: 131445
IHS Contract #: 75H70123R00008
IHS Award Date: 02/02/2024

BASED ON PROGRAM OF REQUIREMENTS DATED [**03/26/22**], POR AMENDMENT DATED [**02/03/25**], AND ON SCHEMATIC DRAWINGS APPROVED [**11/19/24**].

SMITHGROUP

455 NORTH THIRD STREET
SUITE 250
PHOENIX, AZ 85004
602.265.2200
smithgroup.com

ISSUED FOR	DATE
BID ADDENDUM-E	28MAY26
BID ADDENDUM-A	16APR26
FINAL CONSTRUCTION DOCUMENTS	05MAR26

SEALS AND SIGNATURES

Registered Professional Engineer (Electrical)
CERTIFICATE NO. 54673
DANIEL L. PETERSON
Date Signed 05-28-26
ARIZONA, U.S.A.
EXPIRES: 6-30-28

ELECTRICAL ONE LINE DIAGRAM - SOLAR

Drawn By: Whittington Checked By: Baca

14904.000
PROJECT NUMBER

CD **E5.8**
SHEET NUMBER

Plot Date: 5/28/2026 12:09:26 PM Whittington