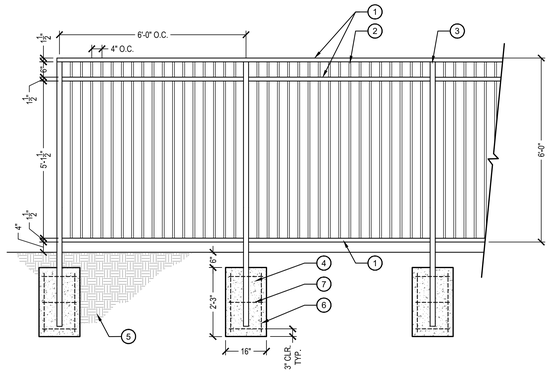

1. 1-1/2" X 1-1/2" TUBE STEEL FRAME
2. 3/4" X 3/4" PICKET @ 4" O.C. MAX. EQUALLY SPACE PICKETS
3. 2" SHS SQ. TUBE STEEL
4. 16" DIA. C.I.P. CONCRETE FOOTING
5. COMPACTED SUBGRADE
6. (4) NO. 5 VERTICAL BARS EQ. SP.
7. (3) NO. 5 HORIZONTAL BARS EQ. SP.

NOTES:
1. DELEGATED DESIGN, PROVIDE APPROVED SEALED SHOP DRAWINGS FOR FENCE.

2. CONTRACTOR TO FIELD VERIFY PANEL SIZES.

3. FENCE TO BE PRIMED AND PAINTED, COLOR SELECTION TBD BY LA

1 ORNAMENTAL FENCE

SCALE: 1/2" = 1'-0"

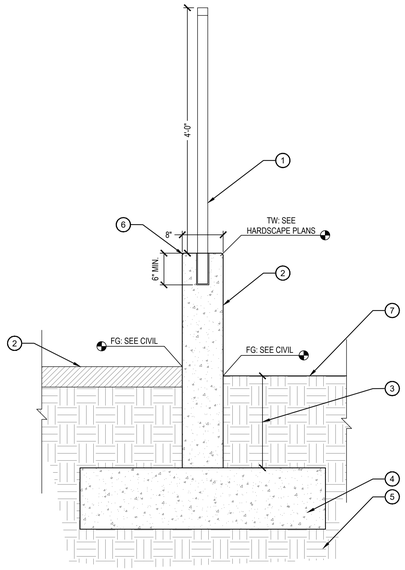

1. ORNAMENTAL FENCE, CORE DRILL / EPOXY SET INTO CONCRETE, SEE DETAIL 1/ L5.0.3 (SIM.)
2. CAST-IN-PLACE CONCRETE WALL (REF DETAIL 5 / LS5.0.0), SMOOTH FINISH ON HORIZONTAL SURFACES, MEDIUM SANDBLAST FINISH ON VERTICAL SURFACES, COLOR: INTEGRAL COLOR PEBBLE BY DAVIS
3. TOP OF FOOTING DEPTH, SEE STRUCTURAL
4. CONCRETE FOOTING, SEE STRUCTURAL
5. COMPACTED SUBGRADE
6. ½" RADIUS TOOLED EDGE
7. LANDSCAPE AREA

NOTES:

1. SEE STRUCTURAL FOR CONCRETE REINFORCEMENT.

2. PROVIDE SAW-CUT CONTROL JOINTS AT 20'-0" O.C. MAX. TO MINIMIZE CRACKING. PROVIDE EXPANSION JOINTS AS NEEDED. ALIGN EXPANSION JOINTS WITH CORE DRILLS OF ORNAMENTAL FENCE POSTS.

3. PROVIDE SHOP DRAWINGS FOR REVIEW AND APPROVAL BY LANDSCAPE ARCHITECT PRIOR TO MOCK-UP.

2 ORNAMENTAL FENCE WITH CONCRETE WALL

SCALE: 1" = 1'-0"

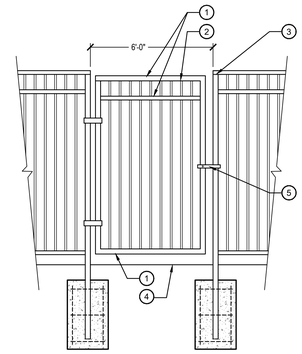

1. 1-1/2" X 1-1/2" TUBE STEEL FRAME
2. ¾" X ¾" PICKET @ 4" O.C. MAX. EQUALLY SPACE PICKETS
3. ORNAMENTAL FENCE, SEE DETAIL 1/ L5.0.3
4. SURFACE MATERIAL VARIES, SEE HARDSCAPE PLANS
5. GATE LATCH

NOTES:
1. DELEGATED DESIGN, PROVIDE APPROVED SEALED SHOP DRAWINGS FOR FENCE.

2. GATE TO BE PRIMED AND PAINTED, COLOR SELECTION TBD BY LA

3 ORNAMENTAL 6' GATE

SCALE: 1/2" = 1'-0"

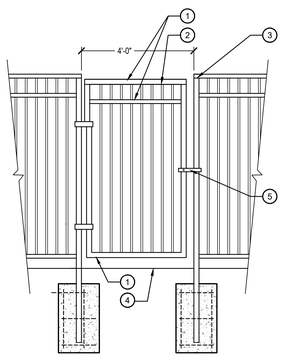

1. 1-1/2" X 1-1/2" TUBE STEEL FRAME
2. ¾" X ¾" PICKET @ 4" O.C. MAX. EQUALLY SPACE PICKETS
3. ORNAMENTAL FENCE, SEE DETAIL 1/ L5.0.3
4. SURFACE MATERIAL VARIES, SEE HARDSCAPE PLANS
5. GATE LATCH

NOTES:
1. DELEGATED DESIGN, PROVIDE APPROVED SEALED SHOP DRAWINGS FOR FENCE.

2. GATE TO BE PRIMED AND PAINTED, COLOR SELECTION TBD BY LA

4 ORNAMENTAL 4' GATE

SCALE: 1/2" = 1'-0"

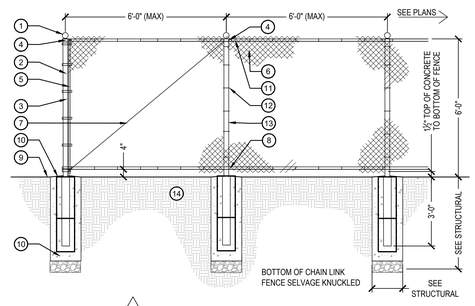

1. ORNAMENTAL CAP
2. END OR CORNER POST 3" @ 6.5LBS/FT.
3. ⅛" x 1" TENSION BANDS 12" ON CENTER
4. TOP RAIL COUPLING
5. ⅛" X ¾" TENSION BAR
6. #9 GAUGE 1" MESH WROUGHT STEEL CHAIN LINK FENCE GALV. AFTER FABRICATION
7. 3/8"Ø DIAGONAL TRUSS ROD WITH BENT ENDS BETWEEN EACH CORNER & LINE POST ALSO LINE & GATE POST, WHERE TOTAL FENCE SIDE HAS 4 OR MORE NUMBER FENCE PANELS ONLY
8. 1½Ø STD. PIPE BOTTOM RAIL 1.66" O.D. 2.27 LBS/FT.
9. FINISH GRADE
10. CONCRETE FOOTING, SLOPE TOP OF FOOTING TO DRAIN (TYP.) - SEE STRUCTURAL
11. 1½Ø STD. PIPE TOP RAIL 1.66" O.D. 2.27 LBS/FT. FOR FENCES OVER 12'
12. #9 GAUGE STEEL FABRIC TIES @ 12" ON CENTER
13. 2 ½ "Ø STD. PIPE LINE POST 2.875" O.D. SCH40
14. COMPACTED SUBGRADE

NOTES:

1. SHOP DRAWINGS TO BE PROVIDED FOR ALL FENCING AND GATES.
2. THE CENTER LINE OF LINE POSTS IS THE CENTER LINE OF THE FENCE.
3. THE BOTTOM RAIL SHALL BE 1½"Ø STD. PIPE (1.66" O.D. @ 2.27LBS/FT.) WITH #9 GAUGE STEEL FABRIC TIES @ 12" ON CENTER.
4. ALL FENCE CAPS SHALL BE SPOTWELDED.
5. ALL PIPE TO BE WROUGHT STEEL HOT DIP GALVANIZED. SIZE AS SHOWN ON DETAILS OF THIS SHEET.
6. REQUIRED MAXIMUM INTERMEDIATE END OR CORNER POST SPACING IS AS FOLLOWS: FOR 6'-0" HIGH FENCE SPACING 6'-0", PER INDUSTRY STANDARDS.
7. END POST SHALL BE THE SAME SIZE AS CORNER POST, INSTALLED WITH ADJACENT PANELS, COMPLETE WITH TENSION BARS, AND TRUSS ROD TO BE USED FOR 6'-0" HT. FENCES ONLY, TOP RAIL COUPLINGS SHALL BE WROUGHT STEEL GALVANIZED OUTSIDE SLEEVE TYPE. ALL FITTINGS TO BE EQUIPPED WITH NUTS AND BOLTS AS REQUIRED FOR ERECTION, (ALL GALV.) CLAMPS AND CAPS TO BE MALLEABLE IRON, GALVANIZED. BANDS TO BE WROUGHT STEEL GALVANIZED. LOCKING DEVICE TO BE ADAPTABLE FOR PADLOCKING. CARRIAGE BOLTS AND NUTS TO BE ⅜"Ø GALV. STEEL OF PROPER LENGTH.
8. POST FOOTINGS TO BE OF CLASS SPECIFIED.
9. THE TOP PORTION OF THE FOOTING SHALL BE FORMED FOR A MINIMUM OF 9" WHEN DIRECTED BY THE ENGINEER.
10. ALL FENCE GROUNDING SHALL MEET THE REQUIREMENTS OF THE CURRENT MUNICIPAL CODE OF NAVAJO COUNTY.
11. ALL FENCING SHALL BE GROUNDED AT ENDS. THE CONNECTIONS TO THE GROUND SHALL BE MADE TO THE FENCE FABRIC BOTTOM SELVAGE. GATES SHALL BE GROUNDED TO THE GATE POSTS BY MEANS OF JUMPERS. ALL CONNECTIONS SHALL BE MADE BY MEANS OF SOLDERLESS, NON-FERROUS CONNECTORS. THE TOP OF THE RODS SHALL BE SIX INCHES BELOW THE FINISH GROUND SURFACE AND THE CABLE CONNECTION SHALL BE MADE AT LEAST SIX INCHES BELOW THE TOP OF THE GROUND ROD. ALL CONNECTIONS BETWEEN GATE AND FENCE AND GROUND ROD SHALL BE NO. 8 BARE STRANDED SOFT DRAWN CABLE.
12. GROUND RODS SHALL BE INSTALLED AS REQUIRED AND SHALL BE MADE OF COPPER OR COPPER-CLAD STEEL, NOT LESS THAN ⅝" DIAMETER AND LENGTH OR NUMBER OF RODS SHALL HAVE A RESISTANCE TO GROUND NOT TO EXCEED 25 OHMS. GROUND RODS TO BE INSTALLED VERTICALLY. GROUND RODS SHALL OCCUR NO FURTHER APART THAN 50' ON-CENTER OR ONE PER 50 LINEAR FEET. INSTALL GROUND ROD ON ONE END OF 6'-0" FENCE.
14. IF A FENCE IS 5' OR LESS IN DISTANCE FROM A LIGHT POLE THEN THE FENCE SHALL BE BONDED TO THE LIGHT POLE BY MEANS OF UNDERGROUND JUMPERS.
15. CONCRETE FOR FOOTINGS SHALL BE 28 DAY STRENGTH 3500 PSI MIN. AIR ENTRAINED AND AIR CONTENT 5-8% TO SLUMP 2"-4".

5 CHAIN LINK FENCE

SCALE: NTS

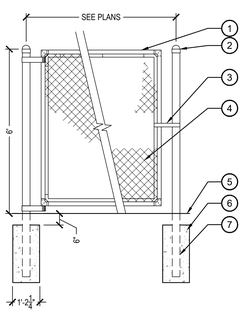

1. TOP RAIL
2. POST CAP
3. GATE LATCH
4. FABRIC ON SAME SIDE OF FENCE AS PARKING LOT
5. FINISH GRADE
6. FENCE POST FOUNDATION
7. FENCE POST

NOTES:
1. SHOP DRAWINGS TO BE PROVIDED FOR REVIEW AND APPROVAL BY LANDSCAPE ARCHITECT.

2. GATES TO HAVE CORNER FITTINGS - COMPRESSION OR RIVETED TYPE.

3. ALL GATES SHALL BE PROPERLY BRACED AND SUPPORTED TO PREVENT SAGGING AND EQUIPPED WITH HEAVY DUTY HINGES TO MAINTAIN ALIGNMENT AND FREE SWING ACTION.

4. ALL GATES TO BE COMPLETE WITH MALLEABLE IRON HINGES AND CATCHES. PROVIDE FORK TYPE LATCHES WITH PROVISIONS FOR PADLOCK.

6 CHAIN LINK PEDESTRIAN GATE

SCALE: NTS

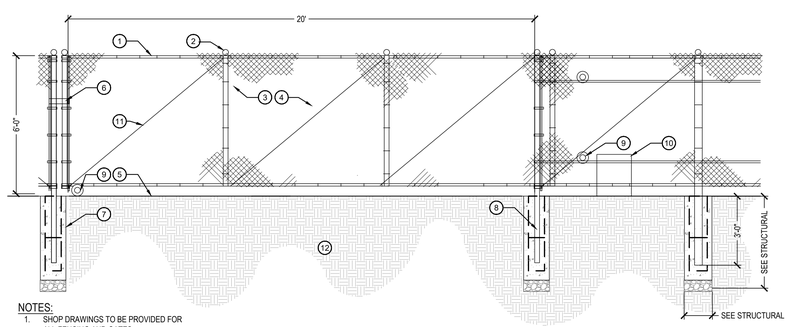

NOTES:
1. SHOP DRAWINGS TO BE PROVIDED FOR ALL FENCING AND GATES.
2. SEE STRUCTURAL FOR FOUNDATION AND REINFORCEMENT INFORMATION.

GATES:
1. CORNER FITTINGS-COMPRESSION OR RIVETED TYPE.
2. HARDWARE TO COMPLY WITH ANSI A117.1-2003, SECTION 309.
3. ALL GATES SHALL BE PROPERLY BRACED AND SUPPORTED TO PREVENT SAGGING TO MAINTAIN ALIGNMENT.

1. TOP RAIL
2. POST CAP
3. FENCE GATE PANEL
4. FABRIC ON SAME SIDE OF FENCE AS PARKING LOT
5. FINISH GRADE
6. LATCH AND PADLOCK
7. FENCE POST FOUNDATION - SEE STRUCTURAL
8. FENCE POST
9. HEAVY DUTY ROLLER WHEEL
10. SLIDE GATE OPERATOR. SEE ELECTRICAL FOR POWER
11. 3/8" DIAGONAL TRUSS ROD WITH BENT ENDS
12. COMPACTED SUBGRADE

7 VEHICULAR CHAIN LINK GATE, SLIDE

SCALE: NTS

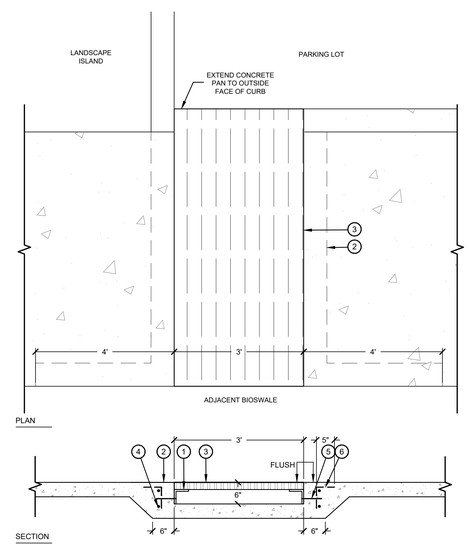

1. L4X4X3/8 STEEL ANGLE LEDGER
2. TURN-DOWN EDGE
3. CMW-4-125-CLOSE MESH, ADA COMPLIANT BAR GRATING BY MCNICHOLS. 11-W-4 SPACING, CARBON STEEL, 1-1/4" X 3/16" RECTANGULAR BAR. DESIGN FOR 100 PSF LIVE LOAD, NATURAL FINISH.
4. NO. 4 CONT., TYP.
5. 1/2" DIA STAINLESS STEEL KWIK BOLT TZ2 W/ 2-1/2" MIN EMBED (ICC-ESR 4266), 6" MAX FROM EA END AND 24" O.C., TYP.
6. DOWEL INTO SIDEWALK, 1/2" DIA X 5" LONG EXPANSION ANCHORS 6" MAXIMUM FROM EACH END AND 24" O.C. MAXIMUM IN BETWEEN

NOTE:
1. ALL STEEL TO BE NATURAL FINISH. GRIND ALL WELDS SMOOTH THEN SANDBLAST ALL STEEL MEMBERS TO REMOVE ANY OIL, SCALE, PAINT, AND SHOP MARKINGS TO PROMOTE CLEAN SURFACE AND RAPID/ EVEN RUST FINISH.

2. PROVIDE SHOP DRAWINGS FOR REVIEW AND APPROVAL PRIOR TO INSTALLATION.

8 SCUPPER AT PARKING LOT

SCALE: 1"=1'-0"

HD-SCUPPER

IHS Whiteriver Hospital

200 W Hospital Drive
Whiteriver, Arizona, 85941

IHS Project #: 131445
IHS Contract #: 75H70123R00008
IHS Award Date: 02/02/2024

BASED ON PROGRAM OF REQUIREMENTS DATED [**03/26/22**], POR AMENDMENT DATED [**02/03/25**], AND ON SCHEMATIC DRAWINGS APPROVED [**11/19/24**].

SMITHGROUP

455 NORTH THIRD STREET
SUITE 250
PHOENIX, AZ 85004
602.265.2200
smithgroup.com

ISSUED FOR	REV	DATE
BID ADDENDUM-D		20MAY26
BID ADDENDUM-C		14MAY26
BID ADDENDUM-A		16APR26
FINAL CONSTRUCTION DOCUMENTS		05MAR26

SEALS AND SIGNATURES

REGISTERED LANDSCAPE ARCHITECT CERTIFICATE NO. 47191 RICHARD A. JONES DATE SIGNED 5.15.2026 ARIZONA, U.S.A.

EXPIRES: 03/31/28

KEYMAP

SITE DETAILS

Drawn By: MICHAELS Checked By: JONES

14904.000

PROJECT NUMBER

CD

SHEET NUMBER

LS5.0.3

Plot Date: