U.S. DEPARTMENT OF THE INTERIOR
REHABILITATION OF THE MAINTENANCE COMPLEX ROOFS
FORT OGLETHORPE, GEORGIA

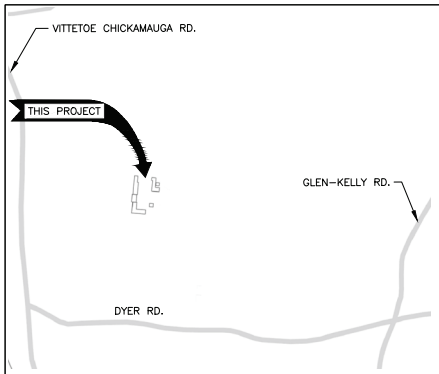

LOCATION MAP

50 0 50
SCALE OF MILES

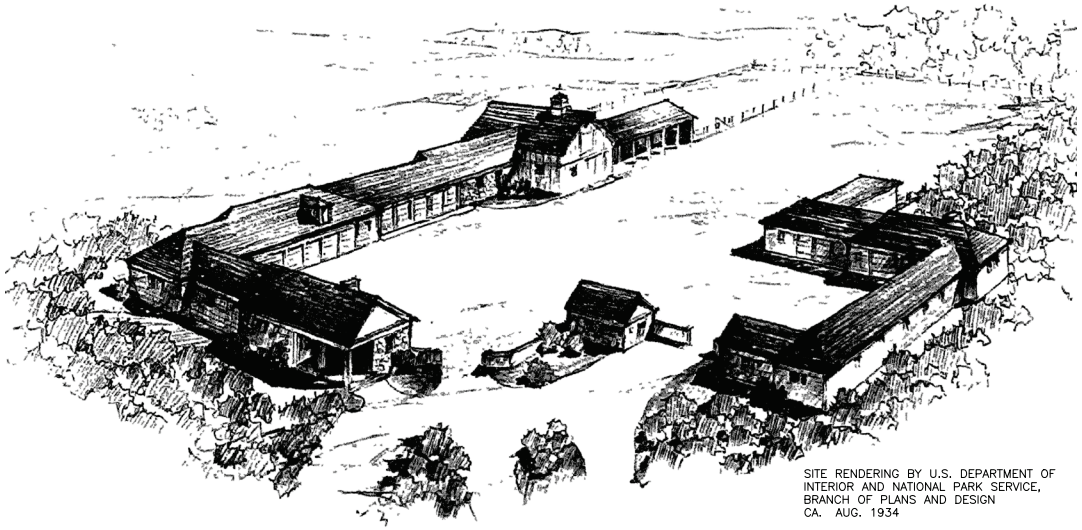

SITE RENDERING BY U.S. DEPARTMENT OF INTERIOR AND NATIONAL PARK SERVICE, BRANCH OF PLANS AND DESIGN CA. AUG. 1934

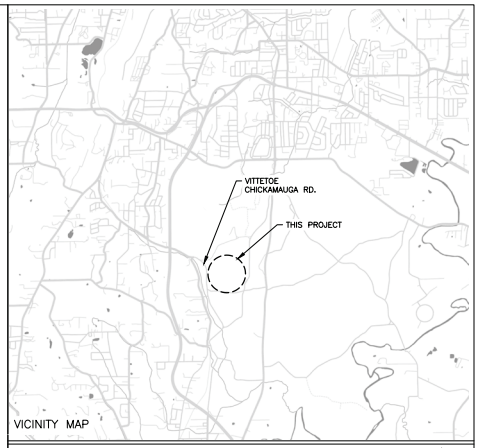

VICINITY MAP

GEORGIA

9.5 0 9.5
SCALE OF MILES

DRAWING INDEX

SHEET	SUB SHEET	TITLE OF SHEET
1	G00	COVER SHEET
2	A1.0	ROOF PLANS
3	A1.1	ROOF PLANS
4	A5.0	ROOF DETAILS
5	A5.1	ROOF DETAILS
6	SD5.0	ROOF SHEATHING REPAIR

GEORGIA REGISTERED 040738 PROFESSIONAL ENGINEER DOUGLAS EDWARD BOND

Douglas E. Bond

A/E FIRMS

CIVIL:
SEAL ENGINEERING – ALEXANDRIA, VA

STRUCTURAL:
MCMULLAN – RESTON, VA

Mark	Sheet	REVISIONS	Date	Initial

QUALITY DESIGN CERTIFICATION

- ☐ Prepared in Accordance with Design Development (Title 1) _____ Drawing No.
  OR
- ☐ Variance from Design Development (Title 1) Approved by Superintendent on _____ Date
  OR
- ☐ Construction Drawing Not Preceded by Design Development (Title 1)

_____ Project Manager _____ Date

NATIONAL PARK SERVICE

CONSTRUCTION DOCUMENTS

UNITED STATES
DEPARTMENT OF THE INTERIOR

NATIONAL PARK SERVICE
DENVER SERVICE CENTER

TITLE OF DRAWING
REHAB. COMPLEX ROOFS

LOCATION WITHIN PARK
FORT OGLETHORPE, GEORGIA

NAME OF PARK
CHICKAMAUGA&CHATTANOOGA NAT'L MILITARY PK.

REGION	COUNTY	STATE
EAST	WALKER	GEORGIA

DRAWING NO. 301 / 190071

PKG. NO. 25 / 70 / 02

SHEET 1 OF 6

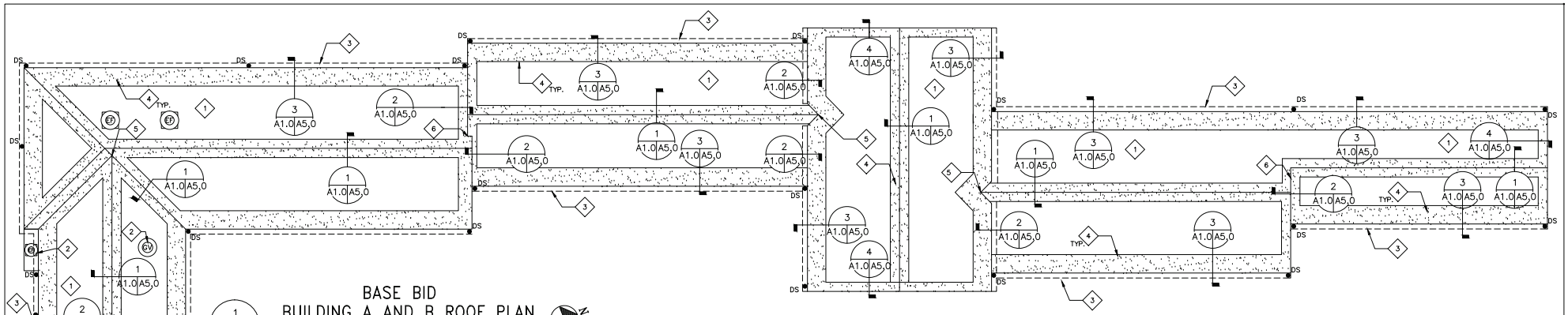

BASE BID
BUILDING A AND B ROOF PLAN

1 / A1.0

SCALE: 1/8"=1'-0"

GENERAL NOTES

1. CONDUCT OPERATION IN STRICT ACCORDANCE WITH OSHA AND OTHER ENTITIES HAVING JURISDICTION.
2. CONTRACTOR IS RESPONSIBLE FOR OBTAINING ALL PERMITS REQUIRED FOR EXECUTION OF THE WORK OF THIS CONTRACT.
3. A LOCATION ON SITE WILL BE PROVIDED FOR CONTRACTOR STAGING AND MATERIAL STORAGE. COORDINATE LOCATION FOR STAGING AND STORAGE WITH NPS REPRESENTATIVE. RESTORE ALL AREAS USED FOR ACCESS, STAGING AND STORAGE TO PRECONSTRUCTION CONDITION AT THE END OF THE WORK.
4. PROVIDE EROSION AND SEDIMENT CONTROL MEASURES AROUND ACCESS, STAGING AND STORAGE AREAS TO PREVENT CONTAMINATED RUNOFF INTO SURROUNDING AREAS.
5. CONTRACTOR IS REQUIRED TO KEEP A CLEAN AND ORDERLY WORK SITE AT ALL TIMES. PROVIDE NECESSARY SIGNAGE, PHYSICAL BARRICADES AND PROTECTIVE STRUCTURES AS REQUIRED TO PROTECT PEDESTRIANS AND OCCUPANTS FROM INJURY AND THE BUILDING FROM DAMAGE. REMOVE ALL CONSTRUCTION DEBRIS FROM OWNERS PROPERTY AND DISPOSE OF ACCORDING TO LOCAL REGULATIONS DAILY.
6. REMOVE ONLY AS MUCH EXISTING ROOFING AS CAN BE REPLACED AND MADE WATER TIGHT DURING EACH SHIFT. PROVIDE WATER TIGHT TIE-INS BETWEEN NEW AND EXISTING WORK.

KEYED NOTES

1. REMOVE ASBESTOS FIBER-REINFORCED CONCRETE SHINGLES AND UNDERLAYMENT DOWN TO WOOD PLANK ROOF DECK. REMOVE ASSOCIATED METAL FLASHING. INSTALL NEW ROOF SYSTEM.
2. SALVAGE EXISTING ROOF MOUNTED VENTS AND FANS. RESET WITH NEW ROOFING TO PROVIDE PROPER FUNCTION.
3. REMOVE AND REPLACE EXISTING GUTTERS AND DOWNSPOUTS
4. INSTALL ICE AND WATER SHIELD UNDERLAYMENT TO THE EXTENT INDICATED ON THE DRAWINGS AND DETAILS. STRIP IN SHEET METAL DRIP EDGE FLANGES WITH ICE AND WATER SHIELD. COVER ENTIRE ROOF WITH SYNTHETIC UNDERLAYMENT, INCLUDING AREAS WITH ICE AND WATER SHIELD. LAP ALL UNDERLAYMENT TO SHED WATER DOWNSLOPE.
5. PROVIDE SOLDERED VALLEY CAP FLASHING
6. PROVIDE SHOP FABRICATED ALUMINUM SWITCH BACK CAP FLASHING
7. REMOVE SLATE SHINGLES AND UNDERLAYMENT DOWN TO WOOD PLANK ROOF DECK. REMOVE ASSOCIATED METAL FLASHING. INSTALL NEW ROOF SYSTEM

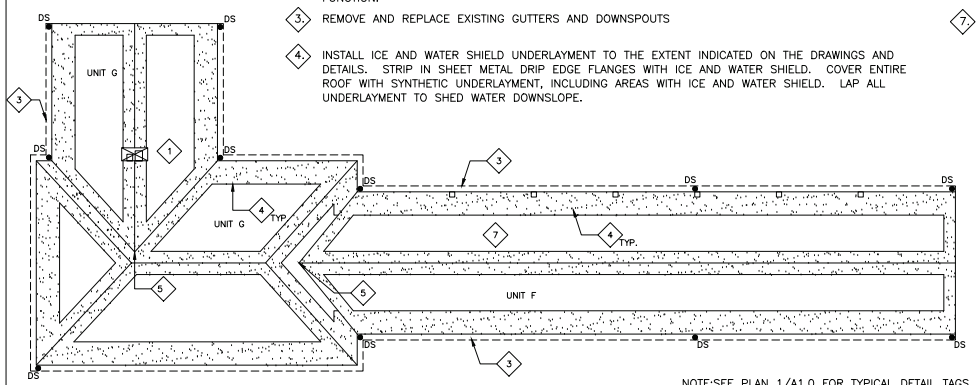

NOTE: SEE PLAN 1/A1.0 FOR TYPICAL DETAIL TAGS

UNIT G (BASE BID) AND F (BID OPTION) ROOF PLANS

2 / A1.0

SCALE: 1/8"=1'-0"

LEGEND:

- GRAVITY VENT
- EXHAUST FAN
- CHIMNEY
- KEYED NOTE
- GUTTER
- DOWNSPOUT
- PIPE PENETRATION
- VENT PIPE
- ICE AND WATER SHIELD UNDERLAYMENT

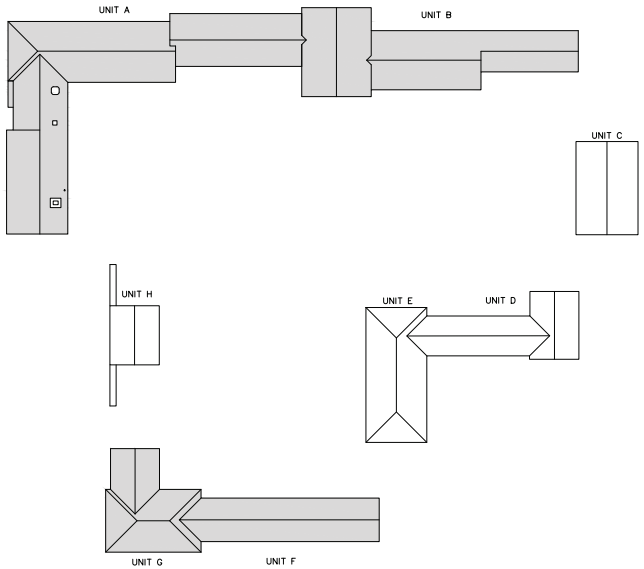

COMPOUND KEY PLAN

SCALE: N.T.S.

SCALE A (1/8"=1'-0") 8 0 8 16 SCALE OF FEET

CONSTRUCTION DOCUMENTS

SEAL ENGINEERING INC.
3329 DUKE STREET ALEXANDRIA, VIRGINIA 22314
703-823-6366 | www.seal-eng.com

A/E FIRM:	DESIGNED:	SUB SHEET NO.	TITLE OF SHEET	DRAWING NO.
STRUCTURAL:	AA	A1.0	ROOF PLANS	301 190071
	CADD AA		NMP REHAB MAINTENANCE ROOFS GEORGIA	PMIS/PKG NO. 257002
	TECH. REVIEW: AA			SHEET 2 OF 6
	DATE: 02/17/2025			

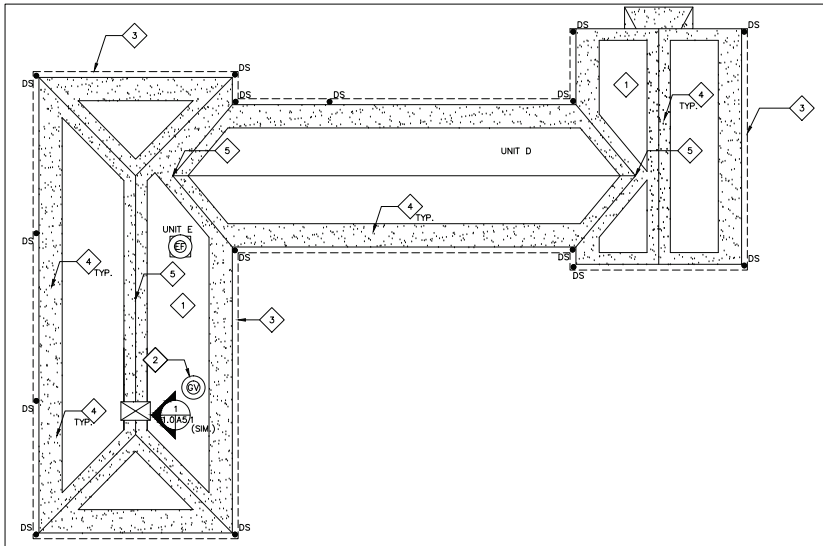

1 / A1.1 BID OPTION BUILDING D AND E ROOF PLAN

SCALE: 1/8"=1'-0"

NOTE: SEE PLAN 1/A1.0 FOR TYPICAL DETAIL TAGS

GENERAL NOTES

1. CONDUCT OPERATION IN STRICT ACCORDANCE WITH OSHA AND OTHER ENTITIES HAVING JURISDICTION.
2. CONTRACTOR IS RESPONSIBLE FOR OBTAINING ALL PERMITS REQUIRED FOR EXECUTION OF THE WORK OF THIS CONTRACT.
3. A LOCATION ON SITE WILL BE PROVIDED FOR CONTRACTOR STAGING AND MATERIAL STORAGE. COORDINATE LOCATION FOR STAGING AND STORAGE WITH NPS REPRESENTATIVE. RESTORE ALL AREAS USED FOR ACCESS, STAGING AND STORAGE TO PRECONSTRUCTION CONDITION AT THE END OF THE WORK.
4. PROVIDE EROSION AND SEDIMENT CONTROL MEASURES AROUND ACCESS, STAGING AND STORAGE AREAS TO PREVENT CONTAMINATED RUNOFF INTO SURROUNDING AREAS.
5. CONTRACTOR IS REQUIRED TO KEEP A CLEAN AND ORDERLY WORK SITE AT ALL TIMES. PROVIDE NECESSARY SIGNAGE, PHYSICAL BARRICADES AND PROTECTIVE STRUCTURES AS REQUIRED TO PROTECT PEDESTRIANS AND OCCUPANTS FROM INJURY AND THE BUILDING FROM DAMAGE. REMOVE ALL CONSTRUCTION DEBRIS FROM OWNERS PROPERTY AND DISPOSE OF ACCORDING TO LOCAL REGULATIONS DAILY.
6. REMOVE ONLY AS MUCH EXISTING ROOFING AS CAN BE REPLACED AND MADE WATER TIGHT DURING EACH SHIFT. PROVIDE WATER TIGHT TIE-INS BETWEEN NEW AND EXISTING WORK.

KEYED NOTES

1. REMOVE ASBESTOS FIBER-REINFORCED CONCRETE SHINGLES AND UNDERLAYMENT DOWN TO WOOD PLANK ROOF DECK. REMOVE ASSOCIATED METAL FLASHING.
2. SALVAGE EXISTING ROOF MOUNTED VENTS AND FANS. RESET WITH NEW ROOFING TO PROVIDE PROPER FUNCTION.
3. REMOVE AND REPLACE EXISTING GUTTERS AND DOWNSPOUTS
4. INSTALL ICE AND WATER SHIELD UNDERLAYMENT TO THE EXTENT INDICATED ON THE DRAWINGS AND DETAILS. STRIP IN SHEET METAL DRIP EDGE FLANGES WITH ICE AND WATER SHIELD. COVER ENTIRE ROOF WITH SYNTHETIC UNDERLAYMENT, INCLUDING AREAS WITH ICE AND WATER SHIELD. LAP ALL UNDERLAYMENT TO SHED WATER DOWNSLOPE.
5. PROVIDE SOLDERED VALLEY CAP FLASHING
6. PROVIDE SHOP FABRICATED ALUMINUM SWITCH BACK CAP FLASHING
7. REMOVE SLATE SHINGLES AND UNDERLAYMENT DOWN TO WOOD PLANK ROOF DECK. REMOVE ASSOCIATED METAL FLASHING. INSTALL NEW ROOF SYSTEM

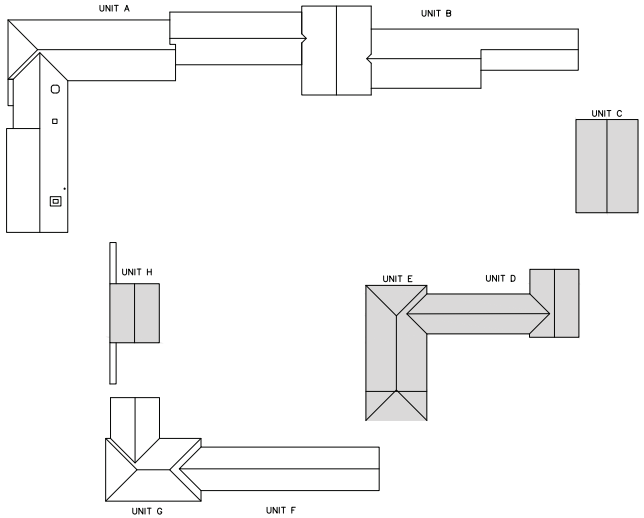

COMPOUND KEY PLAN

SCALE: N.T.S.

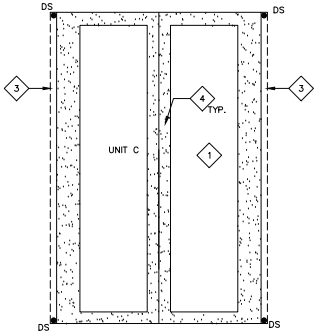

2 / A1.1 BID OPTION UNIT C ROOF PLAN

SCALE: 1/8"=1'-0"

NOTE: SEE PLAN 1/A1.0 FOR TYPICAL DETAIL TAGS

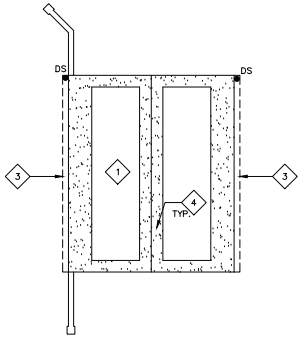

3 / A1.1 BID OPTION UNIT H ROOF PLAN

SCALE: 1/8"=1'-0"

NOTE: SEE PLAN 1/A1.0 FOR TYPICAL DETAIL TAGS

LEGEND:

- GRAVITY VENT
- EXHAUST FAN
- CHIMNEY
- KEYED NOTE
- GUTTER
- DS DOWNSPOUT
- P PIPE PENETRATION
- V VENT PIPE

SCALE A (1/8"=1'-0") 8 0 8 16 SCALE OF FEET

CONSTRUCTION DOCUMENTS

SEAL ENGINEERING INC.
3329 DUKE STREET ALEXANDRIA, VIRGINIA 22314
703-823-0366 | www.seal-eng.com

A/E FIRM:	DESIGNED:	SUB SHEET NO.	TITLE OF SHEET	DRAWING NO.
STRUCTURAL:	AA	A1.1	ROOF PLANS	301 190071
McMullan Consulting Engineers	CADD AA		NMP REHAB MAINTENANCE ROOFS GEORGIA	PMIS/PKG NO. 257002
	TECH. REVIEW: AA			SHEET 3 OF 6
	DATE: 02/17/2025			

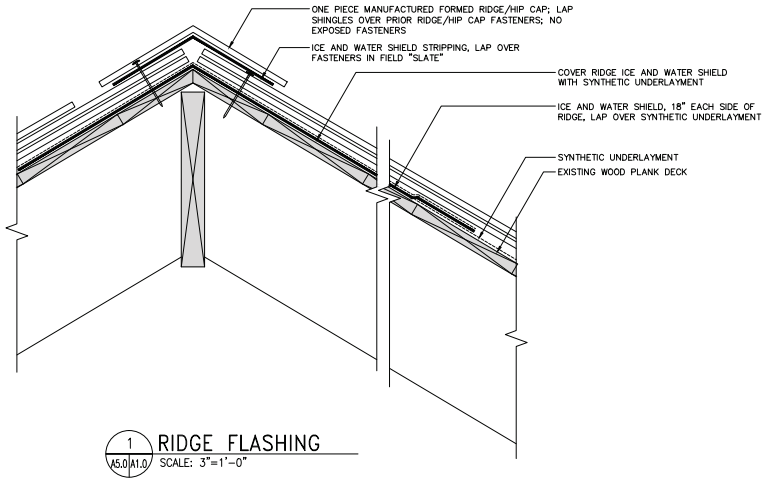

1 A5.0 A1.0 RIDGE FLASHING
SCALE: 3"=1'-0"

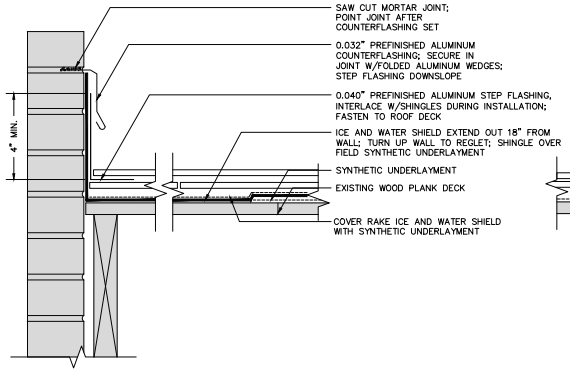

2 A5.0 A1.0 RAKE STEP FLASHING
SCALE: 3"=1'-0"

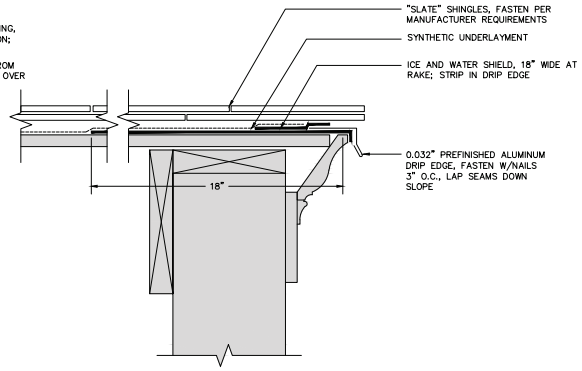

4 A5.0 A1.0 RAKE FLASHING
SCALE: 3"=1'-0"

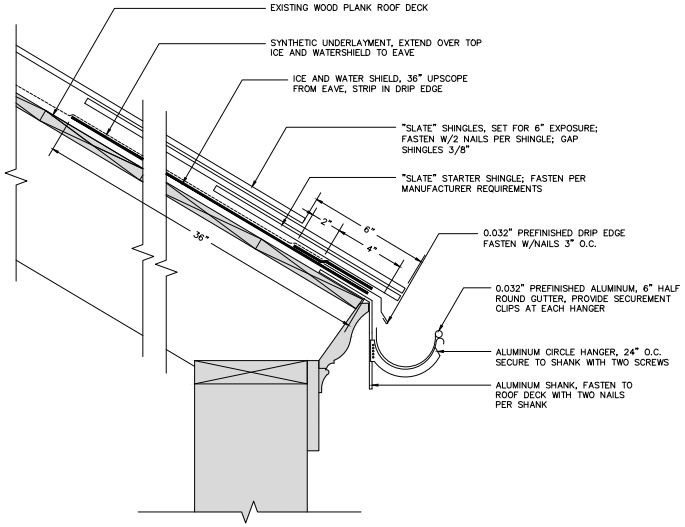

3 A5.0 A1.0 EAVE FLASHING AND GUTTER
SCALE: 3"=1'-0"

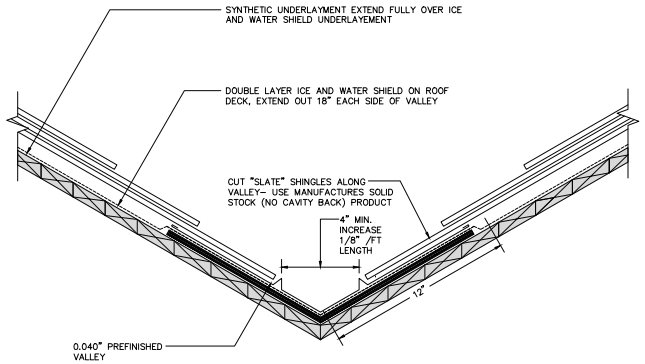

5 A5.0 A1.0 VALLEY FLASHING
SCALE: 3"=1'-0"

SCALE H (3"=1'-0")
0 1
SCALE OF FEET

CONSTRUCTION DOCUMENTS

SEAL ENGINEERING INC.
3329 DUKE STREET ALEXANDRIA, VIRGINIA 22314
703-823-6956 | www.seal-engineer.com

A/E FIRM:	DESIGNED:	SUB SHEET NO.	TITLE OF SHEET	DRAWING NO.
STRUCTURAL:	AA	A5.0	ROOF DETAILS	301 190071
McMullan Consulting Engineers	CADD: AA		NMP REHAB MAINTENANCE ROOFS GEORGIA	PMIS/PKG NO. 257002
	TECH. REVIEW: AA			SHEET 4 OF 6
	DATE: 02/17/2025			

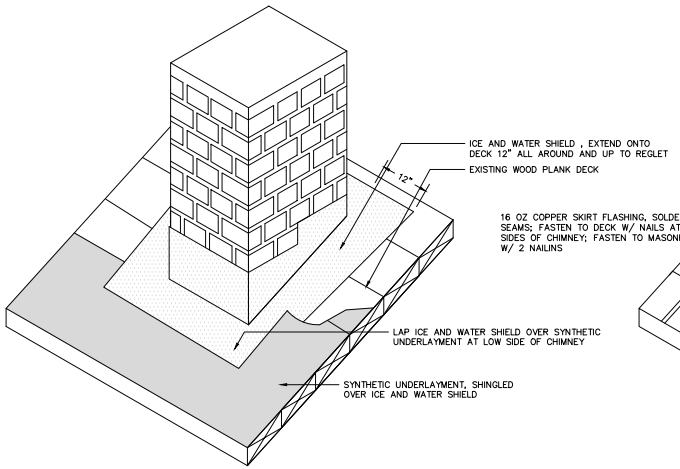

STEP 1

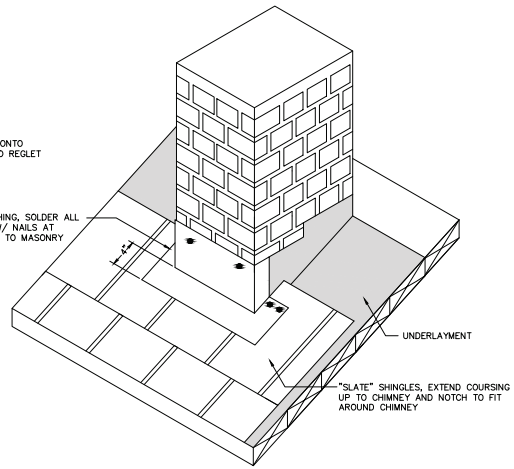

STEP 2

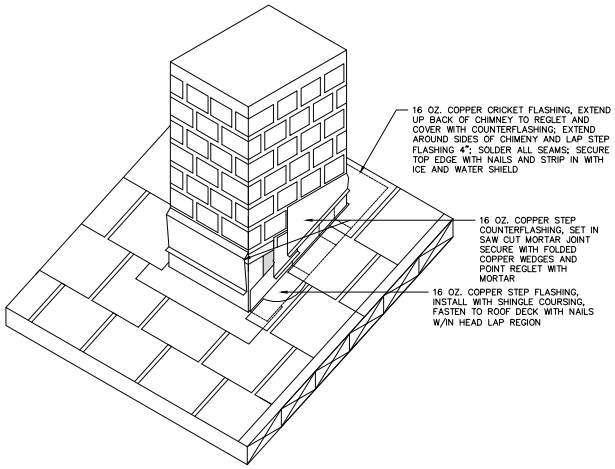

STEP 3

1 A5.1 A1.0 CHIMNEY FLASHING
SCALE: 3"=1'-0"

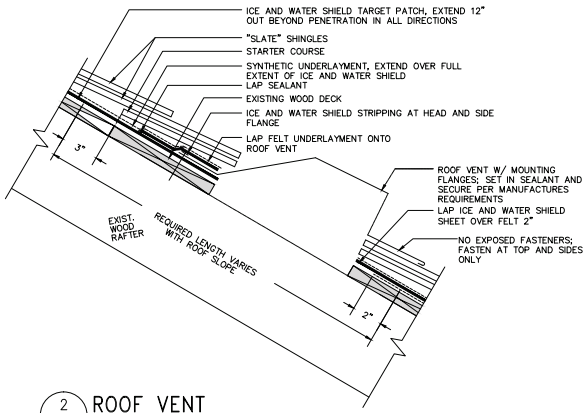

2 A5.1 A1.0 ROOF VENT
SCALE: 3"=1'-0"

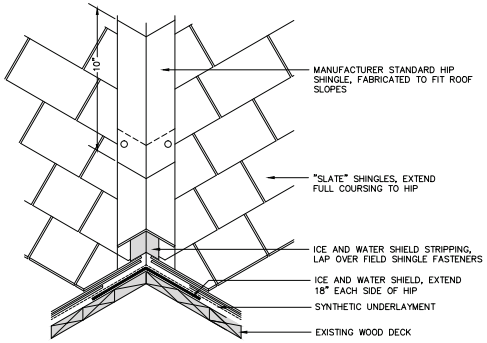

3 A5.1 A1.0 HIP DETAIL
SCALE: 3"=1'-0"

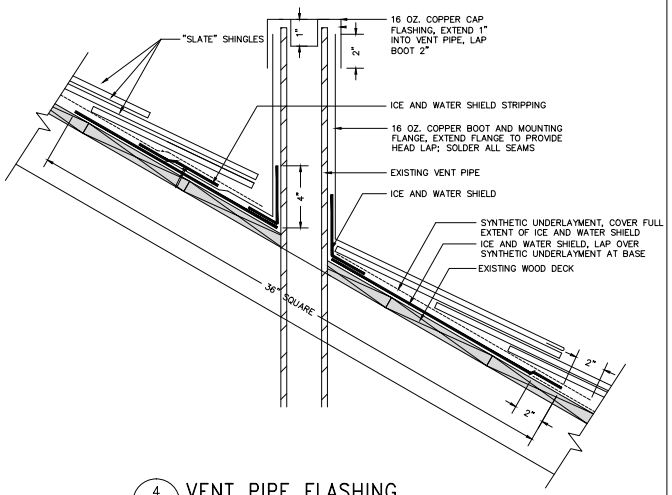

4 A5.1 A1.0 VENT PIPE FLASHING
SCALE: 3"=1'-0"

SCALE H (3"=1'-0") 0 1 SCALE OF FEET

CONSTRUCTION DOCUMENTS

SEAL ENGINEERING INC.
1323 DUKE STREET ALEXANDRIA, VIRGINIA 22314
703-823-6556 | www.seal-eng.com

A/E FIRM:	DESIGNED:	SUB SHEET NO.	TITLE OF SHEET	DRAWING NO.
STRUCTURAL:	AA	A5.1	ROOF DETAILS	301 190071
	CADD AA		NMP REHAB MAINTENANCE ROOFS GEORGIA	PMIS/PKG NO. 257002
	TECH. REVIEW: AA			SHEET 5 OF 6
	DATE: 02/17/2025			

NOTE:
CONTRACTOR SHALL INCLUDE IN BID REMOVAL AND REPLACEMENT OF ROOF SHEATHING FOR THE FOLLOWING:

UNIT A	600 SF
UNIT B	600 SF
UNIT C	150 SF
UNIT D	360 SF
UNIT E	360 SF
UNIT F	210 SF
UNIT G	80 SF
UNIT H	160 SF

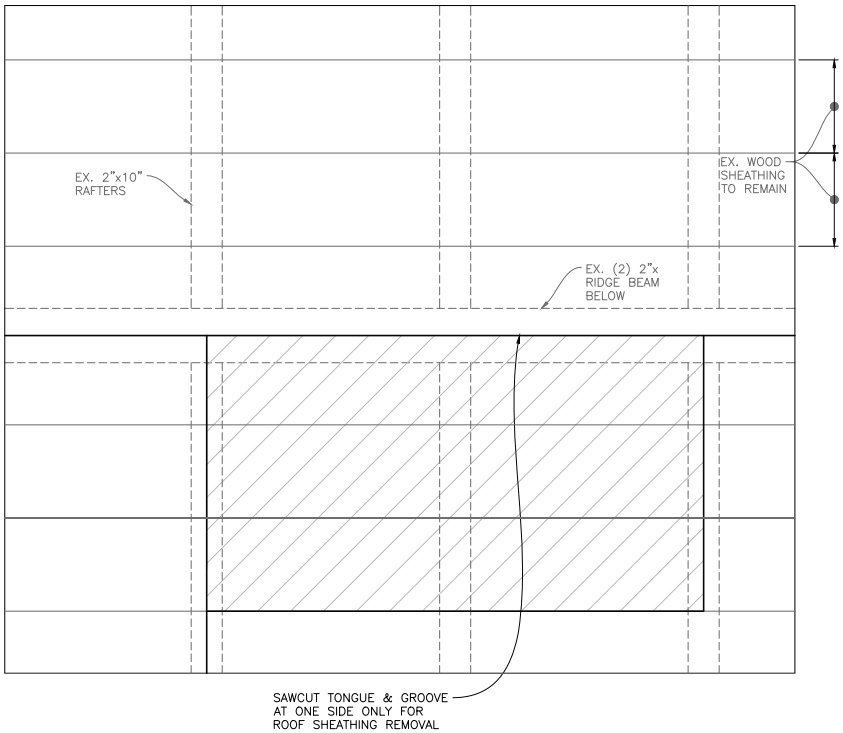

1 SD5.0 ROOF SHEATHING DEMOLITION
SCALE (H)

NOTES:

1. FIELD IDENTIFY SHEATHING THAT HAVE DETERIORATED BADLY ENOUGH THAT THEY NEED TO BE REPLACED. NOTIFY CO OF THE QUANTITY AND LOCATION PRIOR TO REMOVAL. REPLACE DETERIORATED ROOF SHEATHING WHICH HAS BEEN APPROVED BY THE GOVERNMENT.
2. SET SAW DEPTH TO MATCH DEPTH OF EXISTING TONGUE & GROOVE SHEATHING. DO NOT CUT INTO RAFTERS.
3. FOR SHEATHING SHEATHING THAT IS NOT TONGUE & GROOVE, REMOVE DETERIORATED BOARDS AS NEEDED. CUT DETERIORATED BOARDS BACK TO NEAREST RAFTERS FOR NAILING.

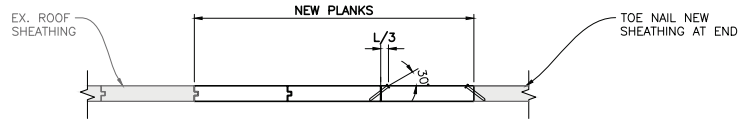

2B SD5.0 ROOF SHEATHING REPLACEMENT
SCALE (H)

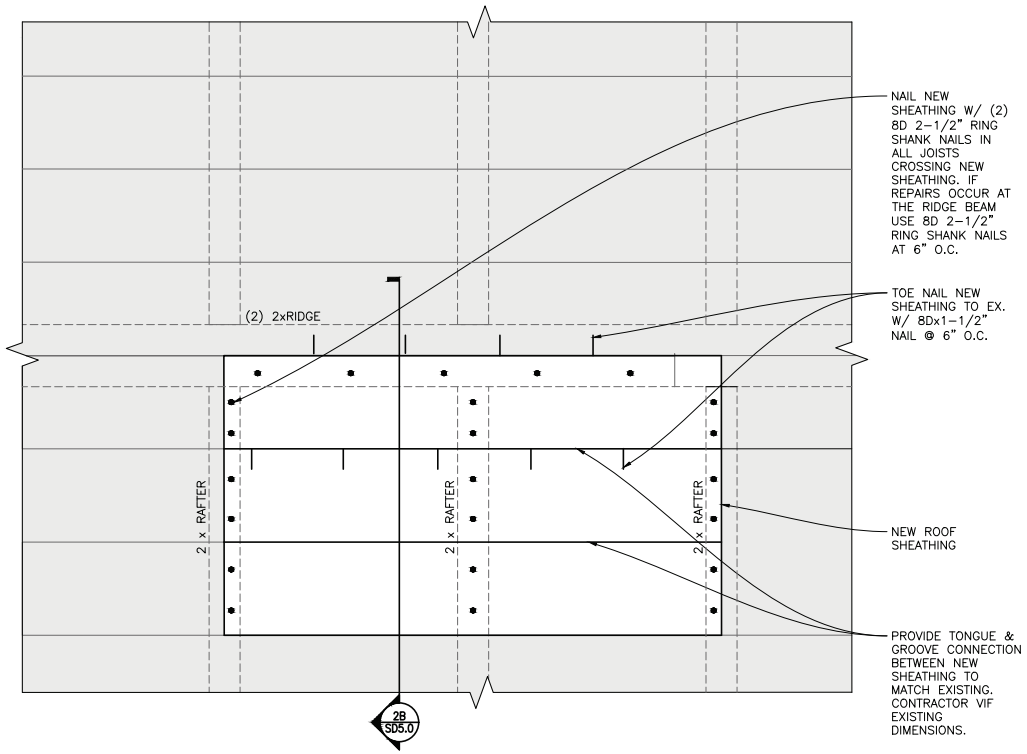

2A SD5.0 ROOF SHEATHING REPLACEMENT
SCALE (H)

SCALE H (3"=1'-0")
0 1
SCALE OF FEET

A/E FIRM:	DESIGNED:	SUB SHEET NO.	TITLE OF SHEET	DRAWING NO.
McMullan Consulting Engineers	AP ADD AA/SO TECH. REVIEW: DB DATE: 02/17/2025	SD5.0	ROOF SHEATHING REPAIR NMP REHAB MAINTENANCE ROOFS GEORGIA	301 190071 PMIS/PKG NO. 257002 SHEET 6 OF 6