1 LEVEL 2 (UPPER GROUND) - HVAC PLAN AREA C
SCALE: 1/8" = 1'-0"

PROJECT NORTH

GRAPHIC SCALE: 1/8" = 1'-0"

Plot Date: 4/16/2026 9:57:24 AM Whittington

GENERAL SHEET NOTES

A. SEE DRAWING E0.1 FOR ABBREVIATIONS, SYMBOLS, GENERAL NOTES AND DEVICE MOUNTING HEIGHT OF WALL MOUNTED DEVICES, UON.
B. ALL BRANCH CIRCUIT WIRING SHALL BE A MINIMUM SIZE OF #10 AWG. REFER TO SHEET E0.2 FOR ADDITIONAL SIZING INFORMATION.
C. THE CONTRACTOR SHALL COORDINATE EXACT LOCATION OF EQUIPMENT POWER CONNECTIONS WITH EQUIPMENT INSTALLER PRIOR TO ROUGH-IN.
D. SEE MECHANICAL EQUIPMENT SCHEDULE FOR ASSOCIATED OVERCURRENT DEVICES, DISCONNECT SWITCHES, STARTERS AND WIRES.
E. CONTRACTOR SHALL COORDINATE AND FIELD VERIFY REQUIREMENT OF NEUTRAL CONDUCTOR FOR ALL EQUIPMENT AND PROVIDE NEUTRAL CONDUCTOR AS NECESSARY.
F. ALL CIRCUITS SHALL BE EQUIPPED WITH A DEDICATED NEUTRAL CONDUCTOR, UNLESS NOTED OTHERWISE.
G. ALL CONDUCTORS SHALL BE COPPER, UNLESS NOTED OR SCHEDULED OTHERWISE.
H. TRIPPING OF GFCI RECEPTACLES SHALL NOT AFFECT THE DOWNSTREAM RECEPTACLES.
I. NO MORE THAN 3 CIRCUITS MAY SHARE A HOMERUN.
J. FOR ALL MECHANICAL EQUIPMENT, PROVIDE ADDITIONAL 120V CONNECTIONS REQUIRED BY MANUFACTURER.
K. FOR EACH AIR HANDLING UNIT, PROVIDE (1)120V CONNECTION FOR LIGHTING AND RECEPTACLES. CIRCUIT TO MECHANICAL PANEL WITHIN THE SPACE.
L. PROVIDE 120V CIRCUITS FOR CONTROL PANELS AS REQUIRED BY CONTROL VENDOR. CIRCUIT TO MECHANICAL PANEL WITHIN THE SPACE.
M. ALL UNUSED WALL OUTLETS TO BE COVERED WITH BLANK PLATE. ALL BLANK PLATE COLORS TO MATCH WALL COLOR.
N. REFER TO 'T' SERIES PLANS FOR LOW VOLTAGE BACK BOX AND RACEWAY REQUIREMENTS.
O. ALL CONDUIT ROUTED WITHIN SLAB SHALL COMPLY WITH GUIDELINES LISTED IN STRUCTURAL DRAWINGS.
P. COORDINATE FINAL LOCATION OF MECHANICAL AND PLUMBING EQUIPMENT AND ASSOCIATED DISCONNECT SWITCHES, STARTERS, VFDS, CONTROL POWER AND OTHER POWER REQUIREMENTS WITH DIV 22 AND 23.
Q. CONTRACTOR IS RESPONSIBLE FOR ALL WIRING FROM VFDs AND DISCONNECTS SHOWN IN DRAWINGS TO THE EQUIPMENT AND IS TO COORDINATE WITH EQUIPMENT MANUFACTURER AND INSTALLATION INSTRUCTIONS.
CONTRACTOR SHALL PROVIDE VFD CABLE FOR LINE AND LOAD SIDE VFD CONNECTIONS.
R. CONTRACTOR SHALL PROVIDE RUN PERMISSIVE INTERLOCK BETWEEN VFD AND LOAD SIDE EQUIPMENT DISCONNECT SWITCH. DISCONNECT SWITCH SHALL BE EQUIPPED WITH AUXILIARY CONTACT.
S. CHILLED BEAM MECHANICAL EQUIPMENT DOES NOT REQUIRE POWER SOURCE CIRCUITING. SHOWN FOR REFERENCE ONLY.
T. EXTEND LINE SIDE OF NEAREST 120V GENERAL RECEPTACLE POWER CIRCUIT TO ELECTRONIC PLUMBING VALVES. COORDINATE ELECTRONIC PLUMBING VALVE INFRASTRUCTURE REQUIREMENTS AND LOCATION WITH PLUMBING CONTRACTOR AND EQUIPMENT MANUFACTURER PRIOR TO COMMENCING WORK. INSTALL PER EQUIPMENT MANUFACTURERS SPECIFICATIONS.

SHEET KEYNOTES

E247 CONNECT ALL FIRE SMOKE DAMPERS IN THIS AREA TO CIRCUIT SHOWN.
E248 CONNECT ALL VAV TRANSFORMERS INSTALLED IN THIS AREA TO CIRCUITS SHOWN. DEVICE TAGS ARE STRUCTURED BASED ON LEVEL AND AREA. BMS CONTRACTOR TO PROVIDE (1) 24V TRANSFORMER TO AN AVERAGE OF (4) VAV'S PER TRANSFORMER. REFERENCE BMS CONTRACTOR SHOP DRAWINGS FOR TRANSFORMER LOCATIONS.
A
E280 PROVIDE WALL MOUNTED EMERGENCY POWER OFF (EPO) SWITCH ASSEMBLY WITH RED MOMENTARY PUSH BUTTON, YELLOW BODY, CLEAR FLIP COVER AND CUSTOM LABELING AS FOLLOWS: "BOILER EMERGENCY SHUTDOWN", MANUFACTURED BY STI #SS2-2-2ZA-EN, OR EQUIVALENT. ACTIVATION OF EPO SHALL SHUNT TRIP ALL CIRCUIT BREAKERS SERVING BOILERS.

DEPARTMENT OF HEALTH & HUMAN SERVICES · USA · INDIAN HEALTH SERVICE · IHS · 1955

IHS Whiteriver Hospital

200 W Hospital Drive
Whiteriver, Arizona, 85941

IHS Project #: 131445
IHS Contract #: 75H70123R00008
IHS Award Date: 02/02/2024

BASED ON PROGRAM OF REQUIREMENTS DATED [**03/26/22**], POR AMENDMENT DATED [**02/03/25**], AND ON SCHEMATIC DRAWINGS APPROVED [**11/19/24**].

SMITHGROUP

455 NORTH THIRD STREET
SUITE 250
PHOENIX, AZ 85004
602.265.2200
smithgroup.com

ISSUED FOR	DATE
BID ADDENDUM-A	16APR26
FINAL CONSTRUCTION DOCUMENTS	05MAR26

SEALS AND SIGNATURES

Registered Professional Engineer (Civil) CERTIFICATE NO. 54673 DANIEL L. PETERSON State Expires 06-30-28 ARIZONA, U.S.A.

EXPIRES: 6-30-28

KEYPLAN

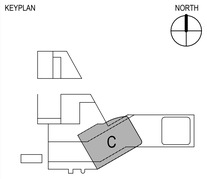

LEVEL 2 (UPPER GROUND) HVAC PLAN AREA C

Drawn By: Whittington Checked By: Baca

14904.000

PROJECT NUMBER

CD **EMP2.2.C**

SHEET NUMBER

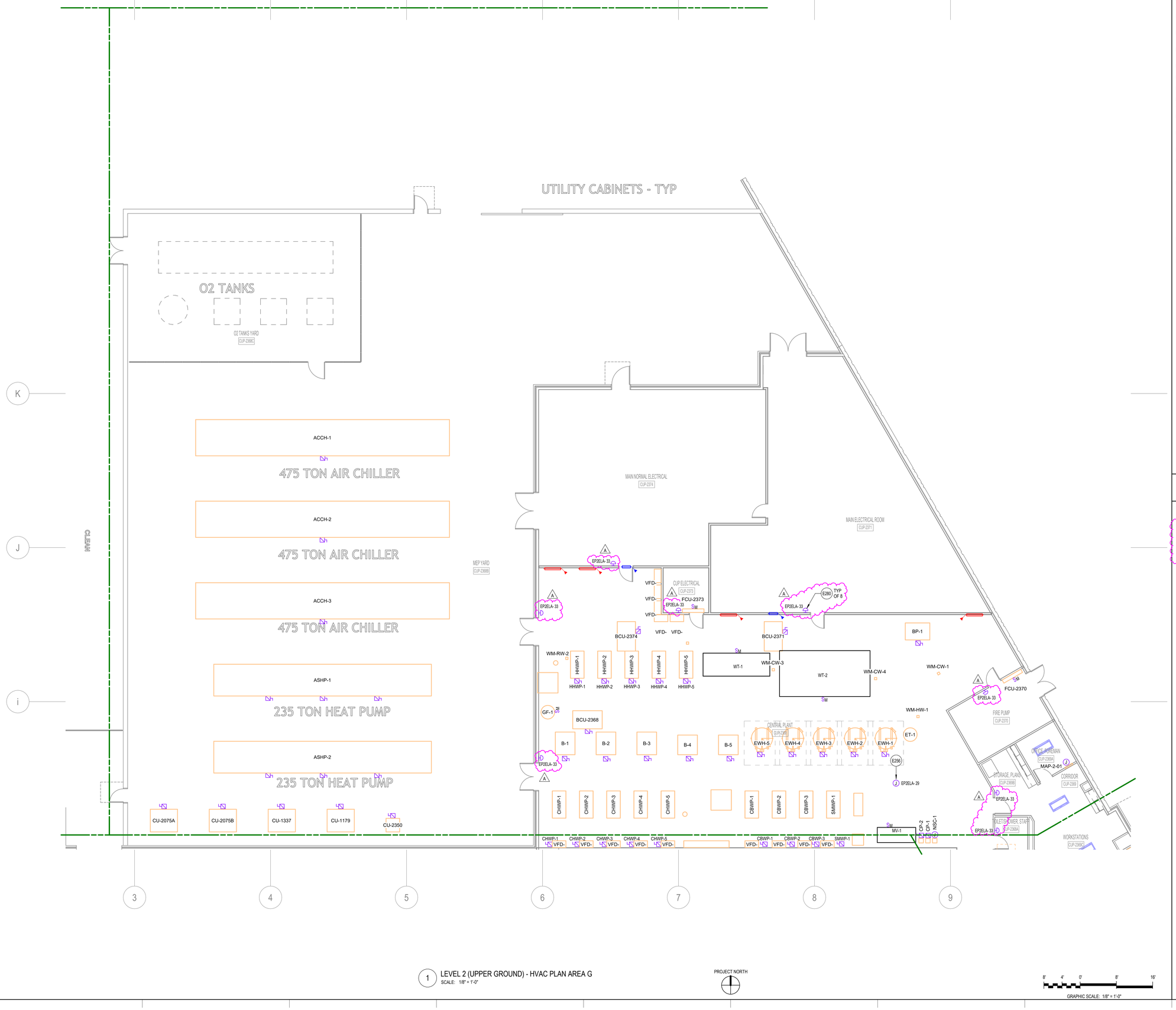

1 LEVEL 2 (UPPER GROUND) - HVAC PLAN AREA G
SCALE: 1/8" = 1'-0"

PROJECT NORTH

8' 4' 0' 8' 16'
GRAPHIC SCALE: 1/8" = 1'-0"

Plot Date: 4/16/2026 9:57:27 AM Whittington

GENERAL SHEET NOTES

A. SEE DRAWING E0.1 FOR ABBREVIATIONS, SYMBOLS, GENERAL NOTES AND DEVICE MOUNTING HEIGHT OF WALL MOUNTED DEVICES, UON.
B. ALL BRANCH CIRCUIT WIRING SHALL BE A MINIMUM SIZE OF #10 AWG. REFER TO SHEET E0.2 FOR ADDITIONAL SIZING INFORMATION.
C. THE CONTRACTOR SHALL COORDINATE EXACT LOCATION OF EQUIPMENT POWER CONNECTIONS WITH EQUIPMENT INSTALLER PRIOR TO ROUGH-IN.
D. SEE MECHANICAL EQUIPMENT SCHEDULE FOR ASSOCIATED OVERCURRENT DEVICES, DISCONNECT SWITCHES, STARTERS AND WIRES.
E. CONTRACTOR SHALL COORDINATE AND FIELD VERIFY REQUIREMENT OF NEUTRAL CONDUCTOR FOR ALL EQUIPMENT AND PROVIDE NEUTRAL CONDUCTOR AS NECESSARY.
F. ALL CIRCUITS SHALL BE EQUIPPED WITH A DEDICATED NEUTRAL CONDUCTOR, UNLESS NOTED OTHERWISE.
G. ALL CONDUCTORS SHALL BE COPPER, UNLESS NOTED OR SCHEDULED OTHERWISE.
H. TRIPPING OF GFCI RECEPTACLES SHALL NOT AFFECT THE DOWNSTREAM RECEPTACLES.
I. NO MORE THAN 3 CIRCUITS MAY SHARE A HOMERUN.
J. FOR ALL MECHANICAL EQUIPMENT, PROVIDE ADDITIONAL 120V CONNECTIONS REQUIRED BY MANUFACTURER.
K. FOR EACH AIR HANDLING UNIT, PROVIDE (1)120V CONNECTION FOR LIGHTING AND RECEPTACLES. CIRCUIT TO MECHANICAL PANEL WITHIN THE SPACE.
L. PROVIDE 120V CIRCUITS FOR CONTROL PANELS AS REQUIRED BY CONTROL VENDOR. CIRCUIT TO MECHANICAL PANEL WITHIN THE SPACE.
M. ALL UNUSED WALL OUTLETS TO BE COVERED WITH BLANK PLATE. ALL BLANK PLATE COLORS TO MATCH WALL COLOR.
N. REFER TO 'T' SERIES PLANS FOR LOW VOLTAGE BACK BOX AND RACEWAY REQUIREMENTS.
O. ALL CONDUIT ROUTED WITHIN SLAB SHALL COMPLY WITH GUIDELINES LISTED IN STRUCTURAL DRAWINGS.
P. COORDINATE FINAL LOCATION OF MECHANICAL AND PLUMBING EQUIPMENT AND ASSOCIATED DISCONNECT SWITCHES, STARTERS, VFDS, CONTROL POWER AND OTHER POWER REQUIREMENTS WITH DIV 22 AND 23.
Q. CONTRACTOR IS RESPONSIBLE FOR ALL WIRING FROM VFDs AND DISCONNECTS SHOWN IN DRAWINGS TO THE EQUIPMENT AND IS TO COORDINATE WITH EQUIPMENT MANUFACTURER AND INSTALLATION INSTRUCTIONS.
CONTRACTOR SHALL PROVIDE VFD CABLE FOR LINE AND LOAD SIDE VFD CONNECTIONS.
R. CONTRACTOR SHALL PROVIDE RUN PERMISSIVE INTERLOCK BETWEEN VFD AND LOAD SIDE EQUIPMENT DISCONNECT SWITCH. DISCONNECT SWITCH SHALL BE EQUIPPED WITH AUXILIARY CONTACT.
S. CHILLED BEAM MECHANICAL EQUIPMENT DOES NOT REQUIRE POWER SOURCE CIRCUITING. SHOWN FOR REFERENCE ONLY.
T. EXTEND LINE SIDE OF NEAREST 120V GENERAL RECEPTACLE POWER CIRCUIT TO ELECTRONIC PLUMBING VALVES. COORDINATE ELECTRONIC PLUMBING VALVE INFRASTRUCTURE REQUIREMENTS AND LOCATION WITH PLUMBING CONTRACTOR AND EQUIPMENT MANUFACTURER PRIOR TO COMMENCING WORK. INSTALL PER EQUIPMENT MANUFACTURERS SPECIFICATIONS.

SHEET KEYNOTES

E256 (A) PROVIDE 120V BRANCH CIRCUIT FOR ENERGY AND WATER FLOW METER CONNECTIONS IN THIS AREA. COORDINATE LOCATIONS WITH PLUMBING.
E280 PROVIDE WALL MOUNTED EMERGENCY POWER OFF (EPO) SWITCH ASSEMBLY WITH RED MOMENTARY PUSH BUTTON, YELLOW BODY, CLEAR FLIP COVER AND CUSTOM LABELING AS FOLLOWS: "BOILER EMERGENCY SHUTDOWN". MANUFACTURED BY STI #SS2-2-2A-EN, OR EQUIVALENT. ACTIVATION OF EPO SHALL SHUNT TRIP ALL CIRCUIT BREAKERS SERVING BOILERS.

DEPARTMENT OF HEALTH & HUMAN SERVICES, USA · INDIAN HEALTH SERVICE · IHS · 1955 ·

IHS Whiteriver Hospital

200 W Hospital Drive
Whiteriver, Arizona, 85941

IHS Project #: 131445
IHS Contract #: 75H70123R00008
IHS Award Date: 02/02/2024

BASED ON PROGRAM OF REQUIREMENTS DATED [**03/26/22**], POR AMENDMENT DATED [**02/03/25**], AND ON SCHEMATIC DRAWINGS APPROVED [**11/19/24**].

SMITHGROUP

455 NORTH THIRD STREET
SUITE 250
PHOENIX, AZ 85004
602.265.2200
smithgroup.com

ISSUED FOR	DATE
BID ADDENDUM-A	16APR26
FINAL CONSTRUCTION DOCUMENTS	23JAN26

SEALS AND SIGNATURES

Registered Professional Engineer (Electrical) CERTIFICATE NO. 54673 DANIEL L. PETERSON Date Signed 04-16-26 ARIZONA U.S.A.
EXPIRES: 6-30-28

KEYPLAN

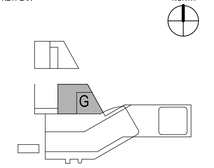

LEVEL 2 (UPPER GROUND) HVAC PLAN AREA G

Drawn By: Whittington Checked By: Baca

14904.000
PROJECT NUMBER

CD **EMP2.2.G**
SHEET NUMBER

1 ONE LINE DIAGRAM - SES-A, 1 OF 2
SCALE: NOT TO SCALE

GENERAL SHEET NOTES

A. **BASE BUILD** SCOPE SHALL ONLY INCLUDE EMPTY CONDUITS OF FEEDERS SHOWN ON THIS SHEET WITH FEEDER TAGS.
B. **ADD ALTERNATE SCOPE** SHALL INCLUDE PV PANELS, CARPORTS, DC CONDUCTORS, INVERTERS, AC CONDUCTORS, AC COMBINER BOXES, PV DISTRIBUTION BOARDS.
C. SEE DRAWING E0.1 FOR ABBREVIATIONS, SYMBOLS, GENERAL NOTES.
D. THE CONTRACTOR SHALL COORDINATE EXACT LOCATION OF EQUIPMENT POWER CONNECTIONS WITH EQUIPMENT INSTALLER PRIOR TO ROUGH-IN.
E. COORDINATE FINAL LOCATION OF MECHANICAL EQUIPMENT AND ASSOCIATED DISCONNECT SWITCHES, STARTERS, VFDS, CONTROL POWER AND OTHER POWER REQUIREMENTS WITH DIV 23 AND MECHANICAL DRAWINGS.
F. SEE MECHANICAL EQUIPMENT SCHEDULE FOR ASSOCIATED OVERCURRENT DEVICES, DISCONNECT SWITCHES, STARTERS AND WIRES.
G. VOLTAGE DROP SHALL BE LIMITED TO LESS THAN 3% FOR ALL BRANCH CIRCUITS AND 2% FOR ALL FEEDERS.
H. CONTRACTOR SHALL COORDINATE AND FIELD VERIFY REQUIREMENT OF NEUTRAL CONDUCTOR FOR ALL EQUIPMENT AND PROVIDE NEUTRAL CONDUCTOR AS NECESSARY.
I. ALL LIFE SAFETY AND LIGHTING PANELBOARDS SHALL BE EQUIPPED WITH TYPE 2 SPD.
J. ALL AUTOMATIC TRANSFER SWITCHES SHALL BE 4 POLE AND EQUIPPED WITH BYPASS ISOLATION.
K. ALL UTILITY TRANSFORMERS DESCRIBED AS NAVOPACHE TRANSFORMER TO BE COORDINATED WITH UTILITY AND PROVIDED BY UTILITY. COORDINATE ALL FINAL REQUIREMENTS AND AVAILABLE FAULT CURRENT CONTRIBUTIONS BASED ON SUPPLIED EQUIPMENT. BASIS OF DESIGN 2500KVA, AND 5%Z.
L. ELECTRICAL EQUIPMENT SHALL BE CONFIGURED AS FOLLOWS:
-SERVICE ENTRANCE SECTIONS - UL891 REAR CONNECTED SWITCHBOARD
-DISTRIBUTION SWITCHBOARDS WITH DRAWOUT CIRCUIT BREAKERS - UL891 REAR CONNECTED SWITCHBOARD
-GENERATOR PARALLELING GEAR - UL1558 SWITCHGEAR

SHEET KEYNOTES

E501 NAVOPACHE UTILITY METER. METER SHALL BE EQUIPPED WITH CAPABILITY TO INTERFACE WITH BMS. ELECTRICAL CONTRACTOR SHALL PROVIDE REQUIRED CONDUIT AND COMMUNICATION WIRING FROM METER TO POINT OF INTERFACE WITH BMS.
E502 COMPLIANCE WITH "NEC 240.87 ARC ENERGY REDUCTION" REQUIRED. REDUCTION METHOD SHALL ALLOW FOR REQUIRED SELECTIVE DEVICE COORDINATION AND ARC FLASH REQUIREMENTS. REFER TO ELECTRICAL SPECIFICATIONS FOR ADDITIONAL INFORMATION.
E503 PROVIDE PERMANENT IDENTIFICATION PLAQUE INDICATING THE FOLLOWING: ELECTRICAL SERVICE #1 OF 5. GENERATORS LOCATED IN ELECTRICAL EQUIPMENT YARD, GENERATOR DISCONNECTS LOCATED IN ADJACENT ELECTRICAL ROOM IN GMDB. PV DISCONNECT LOCATED AT END OF THIS ELECTRICAL EQUIPMENT LINEUP.
E521 PROVIDE RELAY PROTECTION ELEMENTS REQUIRED BY UTILITY AND MULTIPLE GENERATOR AND PV MONITORING AND CONTROL SYSTEM MANUFACTURER. INTEGRATE SEL RELAY AND PROGRAMMING INTO MULTIPLE GENERATOR AND PV MONITORING SYSTEM AND CIRCUIT BREAKER. PROVIDE AND PROGRAM PROTECTION ELEMENT SET POINTS AND LOGIC WITHIN THE RELAY. REFER TO SEL-751 DETAIL FOR ADDITIONAL INFORMATION.

FEEDER SCHEDULE

"X" DENOTES ALUMINUM CONDUCTORS, ALL OTHER CONDUCTORS SHALL BE COPPER

60	4#4 + 1#10 G, 1 1/4" C
60V1	4#1 + 1#6 G, 1 1/2" C
80	4#3 + 1#8 G, 1 1/4" C
A125	4#2/0 + 1#6 G, 2" C
A150	4#3/0 + 1#4 G, 2" C
A200/1	4#400KCMIL + 1#1 G, 2 1/2" C
A225	4#300KCMIL + 1#2 G, 2 1/2" C
A250	4#350KCMIL + 1#2 G, 2 1/2" C
A300	4#500KCMIL + 1#2 G, 3" C
A400	2 SETS OF 4#250KCMIL + 1#1 G, (2) 2 1/2" C
A1000	3 SETS OF 4#600KCMIL + 1#4/0 G, (3) 3 1/2" C
T15	15KVA TRANSFORMER, 480-208Y/120V, 3PH PRIMARY FEEDER: 3#10 + 1#10 G, 3/4" C SECONDARY FEEDER: 4#4 + 1#8 G, 1 1/4" C BONDING JUMPERS & GROUNDING ELECTRODE CONDUCTOR: #8
T45	45KVA TRANSFORMER, 480-208Y/120V, 3PH PRIMARY FEEDER: 3#3 + 1#8 G, 1 1/4" C SECONDARY FEEDER: 4#1/0 + 1#6 G, 2" C BONDING JUMPERS & GROUNDING ELECTRODE CONDUCTOR: #6
T112	112.5KVA TRANSFORMER, 480-208Y/120V, 3PH PRIMARY FEEDER: 3#3/0 + 1#6 G, 2" C SECONDARY FEEDER: 2 SETS OF 4#3/0 + 1#2 G, (2) 2" C BONDING JUMPERS & GROUNDING ELECTRODE CONDUCTOR: #2

IHS Whiteriver Hospital

200 W Hospital Drive
Whiteriver, Arizona, 85941

IHS Project #: 131445
IHS Contract #: 75H70123R00008
IHS Award Date: 02/02/2024

BASED ON PROGRAM OF REQUIREMENTS DATED [**03/26/22**], POR AMENDMENT DATED [**02/03/25**], AND ON SCHEMATIC DRAWINGS APPROVED [**11/19/24**].

SMITHGROUP

455 NORTH THIRD STREET
SUITE 250
PHOENIX, AZ 85004
602.265.2200
smithgroup.com

ISSUED FOR	DATE
BID ADDENDUM-A	16APR26
FINAL CONSTRUCTION DOCUMENTS	05MAR26

SEALS AND SIGNATURES

Registered Professional Engineer (Electrical) CERTIFICATE NO. 54673 DANIEL L. PETERSON Date Signed 04-16-26 STATE OF ARIZONA

EXPIRES: 6-30-28

ELECTRICAL ONE LINE DIAGRAM - SES-A, 1 OF 2

Drawn By: Whittington Checked By: Baca

14904.000

PROJECT NUMBER

CD **E5.1.1**

SHEET NUMBER

Plot Date: 4/16/2026 9:57:32 AM Whittington

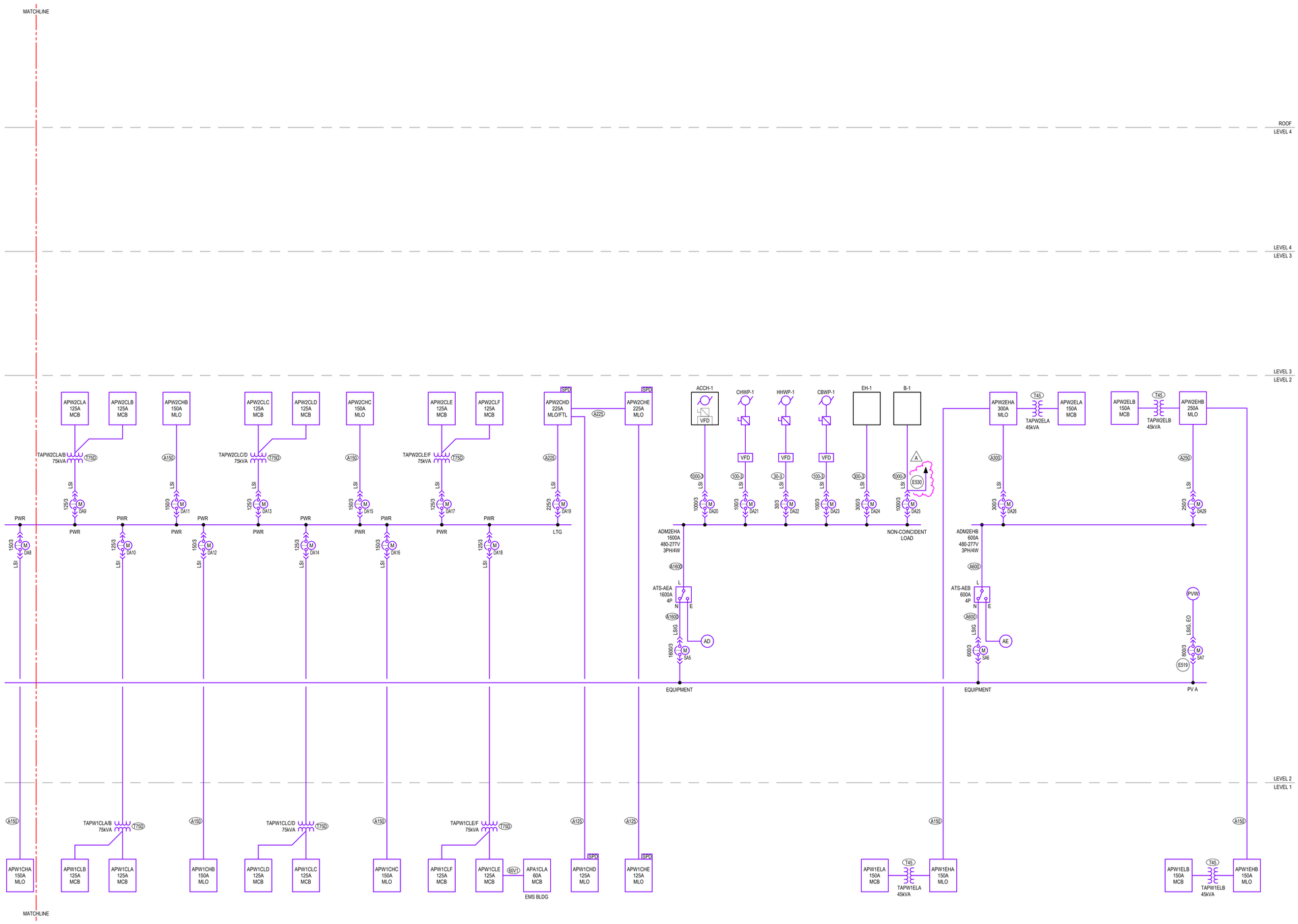

1 ONE LINE DIAGRAM - SES-A, 2 OF 2
SCALE: NOT TO SCALE

GENERAL SHEET NOTES

A. **BASE BUILD** SCOPE SHALL ONLY INCLUDE EMPTY CONDUITS OF FEEDERS SHOWN ON THIS SHEET WITH FEEDER TAGS.
B. **ADD ALTERNATE SCOPE** SHALL INCLUDE PV PANELS, CARPORTS, DC CONDUCTORS, INVERTERS, AC CONDUCTORS, AC COMBINER BOXES, PV DISTRIBUTION BOARDS.
C. SEE DRAWING E0.1 FOR ABBREVIATIONS, SYMBOLS, GENERAL NOTES.
D. THE CONTRACTOR SHALL COORDINATE EXACT LOCATION OF EQUIPMENT POWER CONNECTIONS WITH EQUIPMENT INSTALLER PRIOR TO ROUGH-IN.
E. COORDINATE FINAL LOCATION OF MECHANICAL EQUIPMENT AND ASSOCIATED DISCONNECT SWITCHES, STARTERS, VFDS, CONTROL POWER AND OTHER POWER REQUIREMENTS WITH DIV 23 AND MECHANICAL DRAWINGS.
F. SEE MECHANICAL EQUIPMENT SCHEDULE FOR ASSOCIATED OVERCURRENT DEVICES, DISCONNECT SWITCHES, STARTERS AND WIRES.
G. VOLTAGE DROP SHALL BE LIMITED TO LESS THAN 3% FOR ALL BRANCH CIRCUITS AND 2% FOR ALL FEEDERS.
H. CONTRACTOR SHALL COORDINATE AND FIELD VERIFY REQUIREMENT OF NEUTRAL CONDUCTOR FOR ALL EQUIPMENT AND PROVIDE NEUTRAL CONDUCTOR AS NECESSARY.
I. ALL LIFE SAFETY AND LIGHTING PANELBOARDS SHALL BE EQUIPPED WITH TYPE 2 SPD.
J. ALL AUTOMATIC TRANSFER SWITCHES SHALL BE 4 POLE AND EQUIPPED WITH BYPASS ISOLATION.
K. ALL UTILITY TRANSFORMERS DESCRIBED AS NAVOPACHE TRANSFORMER TO BE COORDINATED WITH UTILITY AND PROVIDED BY UTILITY. COORDINATE ALL FINAL REQUIREMENTS AND AVAILABLE FAULT CURRENT CONTRIBUTIONS BASED ON SUPPLIED EQUIPMENT. BASIS OF DESIGN 2500KVA, AND 5%Z.
A L. ELECTRICAL EQUIPMENT SHALL BE CONFIGURED AS FOLLOWS:
-SERVICE ENTRANCE SECTIONS - UL891 REAR CONNECTED SWITCHBOARD
-DISTRIBUTION SWITCHBOARDS WITH DRAWOUT CIRCUIT BREAKERS - UL891 REAR CONNECTED SWITCHBOARD
-GENERATOR PARALLELING GEAR - UL1558 SWITCHGEAR

SHEET KEYNOTES

E519 PV CIRCUIT BREAKER SHALL BE LOCATED AT LAST BUSSED SPACE. PROVIDE PERMANENT IDENTIFICATION PLAQUE INDICATING THE FOLLOWING: PV POWER SOURCE - DO NOT RELOCATE THIS CIRCUIT BREAKER
A
E530 PROVIDE SHUNT TRIP CIRCUIT BREAKER FOR INTERFACE WITH BOILER EMERGENCY SHUTDOWN EPO SWITCHES. REFER TO EMP2.2.G FOR ADDITIONAL INFORMATION.

FEEDER SCHEDULE

X "A" DENOTES ALUMINUM CONDUCTORS, ALL OTHER CONDUCTORS SHALL BE COPPER

30-3	3#10 + 1#10 G, 3/4" C
60V1	4#1 + 1#6 G, 1 1/2" C
100-3	3#1 + 1#8 G, 1 1/2" C
300-3	3#350KCMIL + 1#4 G, 3" C
1000-3	3 SETS OF 3#400KCMIL + 1#2/0 G, (3) 3" C
A125	4#2/0 + 1#6 G, 2" C
A150	4#3/0 + 1#4 G, 2" C
A225	4#300KCMIL + 1#2 G, 2 1/2" C
A250	4#350KCMIL + 1#2 G, 2 1/2" C
A300	4#500KCMIL + 1#2 G, 3" C
A600	2 SETS OF 4#500KCMIL + 1#2/0 G, (2) 3" C
A1600	5 SETS OF 4#600KCMIL + 1#350KCMIL G, (5) 3 1/2" C
T45	45KVA TRANSFORMER, 480-208Y/120V, 3PH PRIMARY FEEDER: 3#3 + 1#8 G, 1 1/4" C SECONDARY FEEDER: 4#1/0 + 1#6 G, 2" C BONDING JUMPERS & GROUNDING ELECTRODE CONDUCTOR: #6
T75D	75KVA TRANSFORMER, 480-208Y/120V, 3PH PRIMARY FEEDER: 3#1/0 + 1#6 G, 1 1/2" C SECONDARY FEEDERS: 4#1/0 + 1#2 G, 2" C TO EACH PANEL BONDING JUMPERS & GROUNDING ELECTRODE CONDUCTOR: #2

IHS Whiteriver Hospital

200 W Hospital Drive
Whiteriver, Arizona, 85941

IHS Project #: 131445
IHS Contract #: 75H70123R00008
IHS Award Date: 02/02/2024

BASED ON PROGRAM OF REQUIREMENTS DATED [**03/26/22**], POR AMENDMENT DATED [**02/03/25**], AND ON SCHEMATIC DRAWINGS APPROVED [**11/19/24**].

SMITHGROUP
455 NORTH THIRD STREET
SUITE 250
PHOENIX, AZ 85004
602.265.2200
smithgroup.com

ISSUED FOR	DATE
BID ADDENDUM-A	16APR26
FINAL CONSTRUCTION DOCUMENTS	05MAR26

SEALS AND SIGNATURES

Registered Professional Engineer CERTIFICATE NO. 54673 DANIEL L. PETERSON Date Signed 04-16-26 ARIZONA U.S.A.
EXPIRES: 6-30-28

ELECTRICAL ONE LINE DIAGRAM - SES-A, 2 OF 2

Drawn By: Whittington Checked By: Baca
14904.000
PROJECT NUMBER

CD **E5.1.2**
SHEET NUMBER

Plot Date: 4/16/2026 9:57:37 AM Whittington

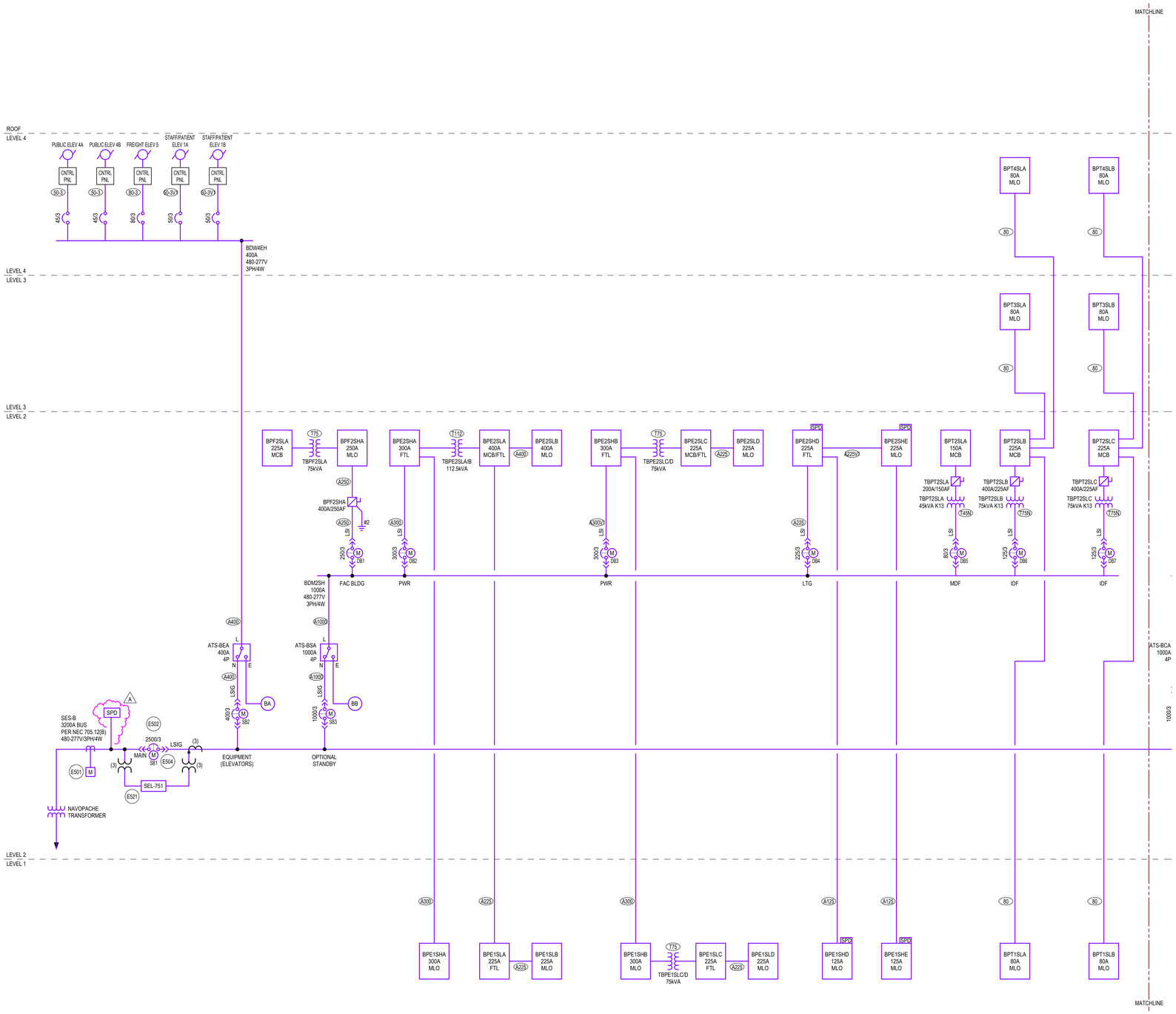

1 ONE LINE DIAGRAM - SES-B, 1 OF 2
SCALE: NOT TO SCALE

GENERAL SHEET NOTES

A. **BASE BUILD** SCOPE SHALL ONLY INCLUDE EMPTY CONDUITS OF FEEDERS SHOWN ON THIS SHEET WITH FEEDER TAGS.
B. **ADD ALTERNATE SCOPE** SHALL INCLUDE PV PANELS, CARPORTS, DC CONDUCTORS, INVERTERS, AC CONDUCTORS, AC COMBINER BOXES, PV DISTRIBUTION BOARDS.
C. SEE DRAWING E0.1 FOR ABBREVIATIONS, SYMBOLS, GENERAL NOTES.
D. THE CONTRACTOR SHALL COORDINATE EXACT LOCATION OF EQUIPMENT POWER CONNECTIONS WITH EQUIPMENT INSTALLER PRIOR TO ROUGH-IN.
E. COORDINATE FINAL LOCATION OF MECHANICAL EQUIPMENT AND ASSOCIATED DISCONNECT SWITCHES, STARTERS, VFDS, CONTROL POWER AND OTHER POWER REQUIREMENTS WITH DIV 23 AND MECHANICAL DRAWINGS.
F. SEE MECHANICAL EQUIPMENT SCHEDULE FOR ASSOCIATED OVERCURRENT DEVICES, DISCONNECT SWITCHES, STARTERS AND WIRES.
G. VOLTAGE DROP SHALL BE LIMITED TO LESS THAN 3% FOR ALL BRANCH CIRCUITS AND 2% FOR ALL FEEDERS.
H. CONTRACTOR SHALL COORDINATE AND FIELD VERIFY REQUIREMENT OF NEUTRAL CONDUCTOR FOR ALL EQUIPMENT AND PROVIDE NEUTRAL CONDUCTOR AS NECESSARY.
I. ALL LIFE SAFETY AND LIGHTING PANELBOARDS SHALL BE EQUIPPED WITH TYPE 2 SPD.
J. ALL AUTOMATIC TRANSFER SWITCHES SHALL BE 4 POLE AND EQUIPPED WITH BYPASS ISOLATION.
K. ALL UTILITY TRANSFORMERS DESCRIBED AS NAVOPACHE TRANSFORMER TO BE COORDINATED WITH UTILITY AND PROVIDED BY UTILITY. COORDINATE ALL FINAL REQUIREMENTS AND AVAILABLE FAULT CURRENT CONTRIBUTIONS BASED ON SUPPLIED EQUIPMENT. BASIS OF DESIGN 2500KVA, AND 5%Z.
1 L. ELECTRICAL EQUIPMENT SHALL BE CONFIGURED AS FOLLOWS:
-SERVICE ENTRANCE SECTIONS - UL891 REAR CONNECTED SWITCHBOARD
-DISTRIBUTION SWITCHBOARDS WITH DRAWOUT CIRCUIT BREAKERS - UL891 REAR CONNECTED SWITCHBOARD
-GENERATOR PARALLELING GEAR - UL1558 SWITCHGEAR

SHEET KEYNOTES

E501 NAVOPACHE UTILITY METER. METER SHALL BE EQUIPPED WITH CAPABILITY TO INTERFACE WITH BMS. ELECTRICAL CONTRACTOR SHALL PROVIDE REQUIRED CONDUIT AND COMMUNICATION WIRING FROM METER TO POINT OF INTERFACE WITH BMS.
E502 COMPLIANCE WITH "NEC 240.87 ARC ENERGY REDUCTION" REQUIRED. REDUCTION METHOD SHALL ALLOW FOR REQUIRED SELECTIVE DEVICE COORDINATION AND ARC FLASH REQUIREMENTS. REFER TO ELECTRICAL SPECIFICATIONS FOR ADDITIONAL INFORMATION.
E504 PROVIDE PERMANENT IDENTIFICATION PLAQUE INDICATING THE FOLLOWING: ELECTRICAL SERVICE #2 OF 5. GENERATORS LOCATED IN ELECTRICAL EQUIPMENT YARD, GENERATOR DISCONNECTS LOCATED IN ADJACENT ELECTRICAL ROOM IN GMDB. PV DISCONNECT LOCATED AT END OF THIS ELECTRICAL EQUIPMENT LINEUP.
E521 PROVIDE RELAY PROTECTION ELEMENTS REQUIRED BY UTILITY AND MULTIPLE GENERATOR AND PV MONITORING AND CONTROL SYSTEM MANUFACTURER. INTEGRATE SEL RELAY AND PROGRAMMING INTO MULTIPLE GENERATOR AND PV MONITORING SYSTEM AND CIRCUIT BREAKER. PROVIDE AND PROGRAM PROTECTION ELEMENT SET POINTS AND LOGIC WITHIN THE RELAY. REFER TO SEL-751 DETAIL FOR ADDITIONAL INFORMATION.

FEEDER SCHEDULE

(X) "A" DENOTES ALUMINUM CONDUCTORS, ALL OTHER CONDUCTORS SHALL BE COPPER

50-3	3#6 + 1#10 G, 3/4" C
50-3V1	3#2 + 1#4 G, 1 1/4" C
80	4#3 + 1#8 G, 1 1/4" C
80-3	3#3 + 1#8 G, 1 1/4" C
A125	4#2/0 + 1#6 G, 2" C
A225	4#300KCMIL + 1#2 G, 2 1/2" C
A225V1	4#400KCMIL + 1#1/0 G, 2 1/2" C
A250	4#350KCMIL + 1#2 G, 2 1/2" C
A300	4#500KCMIL + 1#2 G, 3" C
A300V1	4#600KCMIL + 1#1 G, 3" C
A400	2 SETS OF 4#250KCMIL + 1#1 G, (2) 2 1/2" C
A1000	3 SETS OF 4#600KCMIL + 1#4/0 G, (3) 3 1/2" C
T45N	45KVA TRANSFORMER, 480-208Y/120V, 3PH PRIMARY FEEDER: 3#3 + 1#8 G, 1 1/4" C SECONDARY FEEDER: 3#1/0, 1#4/0 N + 1#6 G, 2" C BONDING JUMPERS & GROUNDING ELECTRODE CONDUCTOR: #6
T75	75KVA TRANSFORMER, 480-208Y/120V, 3PH PRIMARY FEEDER: 3#1/0 + 1#6 G, 1 1/2" C SECONDARY FEEDER: 4#4/0 + 1#2 G, 2 1/2" C BONDING JUMPERS & GROUNDING ELECTRODE CONDUCTOR: #2
T75N	75KVA TRANSFORMER, 480-208Y/120V, 3PH PRIMARY FEEDER: 3#1/0 + 1#6 G, 1 1/2" C SECONDARY FEEDER: 3#4/0, 1#500KCMIL N + 1#2 G, 2 1/2" C BONDING JUMPERS & GROUNDING ELECTRODE CONDUCTOR: #2
T112	112.5KVA TRANSFORMER, 480-208Y/120V, 3PH PRIMARY FEEDER: 3#3/0 + 1#6 G, 2" C SECONDARY FEEDER: 2 SETS OF 4#3/0 + 1#2 G, (2) 2" C BONDING JUMPERS & GROUNDING ELECTRODE CONDUCTOR: #2

IHS Whiteriver Hospital
200 W Hospital Drive
Whiteriver, Arizona, 85941

IHS Project #: 131445
IHS Contract #: 75H70123R00008
IHS Award Date: 02/02/2024

BASED ON PROGRAM OF REQUIREMENTS DATED [**03/26/22**], POR AMENDMENT DATED [**02/03/25**], AND ON SCHEMATIC DRAWINGS APPROVED [**11/19/24**].

SMITHGROUP
455 NORTH THIRD STREET
SUITE 250
PHOENIX, AZ 85004
602.265.2200
smithgroup.com

ISSUED FOR	DATE
BID ADDENDUM-A	16APR26
FINAL CONSTRUCTION DOCUMENTS	05MAR26

SEALS AND SIGNATURES

Registered Professional Engineer CERTIFICATE NO. 54673 DANIEL L. PETERSON Date Signed 04/16/26 ARIZONA U.S.A.
EXPIRES: 6-30-28

ELECTRICAL ONE LINE DIAGRAM - SES-B, 1 OF 2

Drawn By: Whittington Checked By: Baca
14904.000

PROJECT NUMBER
CD **E5.2.1**
SHEET NUMBER

Plot Date: 4/16/2026 9:57:43 AM Whittington

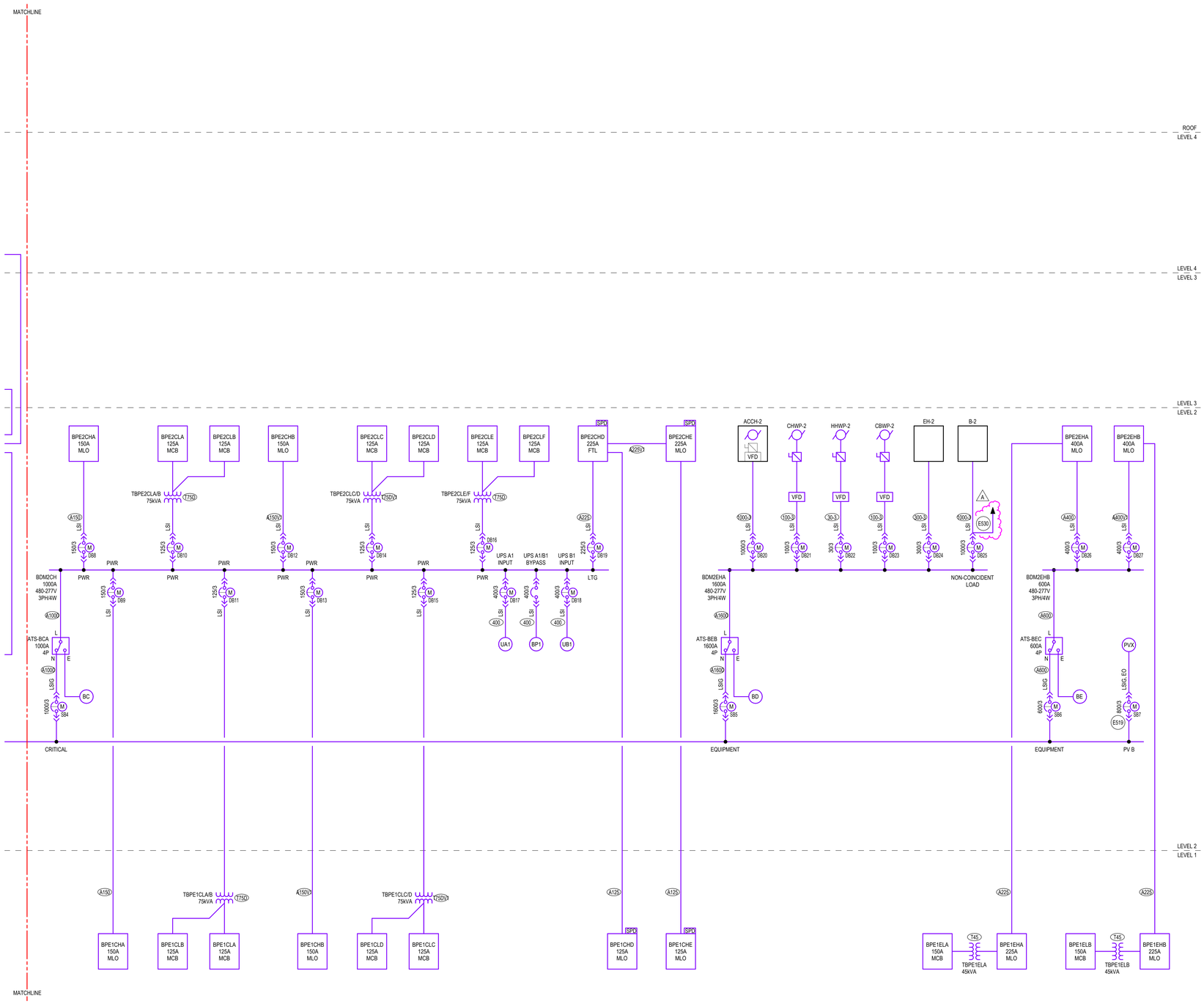

1 ONE LINE DIAGRAM - SES-B, 2 OF 2
SCALE: NOT TO SCALE

GENERAL SHEET NOTES

A. **BASE BUILD** SCOPE SHALL ONLY INCLUDE EMPTY CONDUITS OF FEEDERS SHOWN ON THIS SHEET WITH FEEDER TAGS.
B. **ADD ALTERNATE SCOPE** SHALL INCLUDE PV PANELS, CARPORTS, DC CONDUCTORS, INVERTERS, AC CONDUCTORS, AC COMBINER BOXES, PV DISTRIBUTION BOARDS.
C. SEE DRAWING E0.1 FOR ABBREVIATIONS, SYMBOLS, GENERAL NOTES.
D. THE CONTRACTOR SHALL COORDINATE EXACT LOCATION OF EQUIPMENT POWER CONNECTIONS WITH EQUIPMENT INSTALLER PRIOR TO ROUGH-IN.
E. COORDINATE FINAL LOCATION OF MECHANICAL EQUIPMENT AND ASSOCIATED DISCONNECT SWITCHES, STARTERS, VFDS, CONTROL POWER AND OTHER POWER REQUIREMENTS WITH DIV 23 AND MECHANICAL DRAWINGS.
F. SEE MECHANICAL EQUIPMENT SCHEDULE FOR ASSOCIATED OVERCURRENT DEVICES, DISCONNECT SWITCHES, STARTERS AND WIRES.
G. VOLTAGE DROP SHALL BE LIMITED TO LESS THAN 3% FOR ALL BRANCH CIRCUITS AND 2% FOR ALL FEEDERS.
H. CONTRACTOR SHALL COORDINATE AND FIELD VERIFY REQUIREMENT OF NEUTRAL CONDUCTOR FOR ALL EQUIPMENT AND PROVIDE NEUTRAL CONDUCTOR AS NECESSARY.
I. ALL LIFE SAFETY AND LIGHTING PANELBOARDS SHALL BE EQUIPPED WITH TYPE 2 SPD.
J. ALL AUTOMATIC TRANSFER SWITCHES SHALL BE 4 POLE AND EQUIPPED WITH BYPASS ISOLATION.
K. ALL UTILITY TRANSFORMERS DESCRIBED AS NAVOPACHE TRANSFORMER TO BE COORDINATED WITH UTILITY AND PROVIDED BY UTILITY. COORDINATE ALL FINAL REQUIREMENTS AND AVAILABLE FAULT CURRENT CONTRIBUTIONS BASED ON SUPPLIED EQUIPMENT. BASIS OF DESIGN 2500KVA, AND 5%Z.
L. ELECTRICAL EQUIPMENT SHALL BE CONFIGURED AS FOLLOWS:
-SERVICE ENTRANCE SECTIONS - UL891 REAR CONNECTED SWITCHBOARD
-DISTRIBUTION SWITCHBOARDS WITH DRAWOUT CIRCUIT BREAKERS - UL891 REAR CONNECTED SWITCHBOARD
-GENERATOR PARALLELING GEAR - UL1558 SWITCHGEAR

SHEET KEYNOTES

E519 PV CIRCUIT BREAKER SHALL BE LOCATED AT LAST BUSSED SPACE. PROVIDE PERMANENT IDENTIFICATION PLAQUE INDICATING THE FOLLOWING: PV POWER SOURCE - DO NOT RELOCATE THIS CIRCUIT BREAKER
E530 PROVIDE SHUNT TRIP CIRCUIT BREAKER FOR INTERFACE WITH BOILER EMERGENCY SHUTDOWN EPO SWITCHES. REFER TO EMP2.2.G FOR ADDITIONAL INFORMATION.

FEEDER SCHEDULE

"A" DENOTES ALUMINUM CONDUCTORS, ALL OTHER CONDUCTORS SHALL BE COPPER

30-3	3#10 + 1#10 G, 3/4" C
100-3	3#1 + 1#6 G, 1 1/2" C
300-3	3#350KCMIL + 1#4 G, 3" C
400	2 SETS OF 4#3/0 + 1#3 G, (2) 2" C
1000-3	3 SETS OF 3#400KCMIL + 1#2/0 G, (3) 3" C
A125	4#2/0 + 1#6 G, 2" C
A150	4#3/0 + 1#4 G, 2" C
A150V1	4#400KCMIL + 1#1/0 G, 2-1/2" C
A225	4#300KCMIL + 1#2 G, 2 1/2" C
A225V1	4#400KCMIL + 1#1/0 G, 2 1/2" C
A400	2 SETS OF 4#250KCMIL + 1#1 G, (2) 2 1/2" C
A400V1	2 SETS OF 4#500KCMIL + 1#2/0 G, (2) 3" C
A600	2 SETS OF 4#500KCMIL + 1#2/0 G, (2) 3" C
A1000	3 SETS OF 4#600KCMIL + 1#4/0 G, (3) 3 1/2" C
A1600	5 SETS OF 4#600KCMIL + 1#350KCMIL G, (5) 3 1/2" C
T45	45KVA TRANSFORMER, 480-208Y/120V, 3PH PRIMARY FEEDER: 3#3 + 1#6 G, 1 1/4" C SECONDARY FEEDER: 4#1/0 + 1#6 G, 2" C BONDING JUMPERS & GROUNDING ELECTRODE CONDUCTOR: #6
T75D	75KVA TRANSFORMER, 480-208Y/120V, 3PH PRIMARY FEEDER: 3#1/0 + 1#6 G, 1 1/2" C SECONDARY FEEDERS: 4#1/0 + 1#2 G, 2" C TO EACH PANEL BONDING JUMPERS & GROUNDING ELECTRODE CONDUCTOR: #2
T75DV1	75KVA TRANSFORMER, 480-208Y/120V, 3PH PRIMARY FEEDER: 3#3/0 + 1#4 G, 2" C SECONDARY FEEDERS: 4#1/0 + 1#2 G, 2" C TO EACH PANEL BONDING JUMPERS & GROUNDING ELECTRODE CONDUCTOR: #2

INDIAN HEALTH SERVICE · IHS · 1955 · DEPARTMENT OF HEALTH & HUMAN SERVICES, USA

IHS Whiteriver Hospital

200 W Hospital Drive
Whiteriver, Arizona, 85941

IHS Project #: 131445
IHS Contract #: 75H70123R00008
IHS Award Date: 02/02/2024

BASED ON PROGRAM OF REQUIREMENTS DATED [**03/26/22**], POR AMENDMENT DATED [**02/03/25**], AND ON SCHEMATIC DRAWINGS APPROVED [**11/19/24**].

SMITHGROUP

455 NORTH THIRD STREET
SUITE 250
PHOENIX, AZ 85004
602.265.2200
smithgroup.com

ISSUED FOR	DATE
BID ADDENDUM-A	16APR26
FINAL CONSTRUCTION DOCUMENTS	05MAR26

SEALS AND SIGNATURES

Registered Professional Engineer (Electrical) CERTIFICATE NO. 54673 DANIEL L. PETERSON Date Signed 04-16-26 ARIZONA U.S.A.
EXPIRES: 6-30-28

ELECTRICAL ONE LINE DIAGRAM - SES-B, 2 OF 2

Drawn By: Whittington Checked By: Baca
14904.000
PROJECT NUMBER

CD **E5.2.2**
SHEET NUMBER

Plot Date: 4/16/2026 9:57:48 AM Whittington

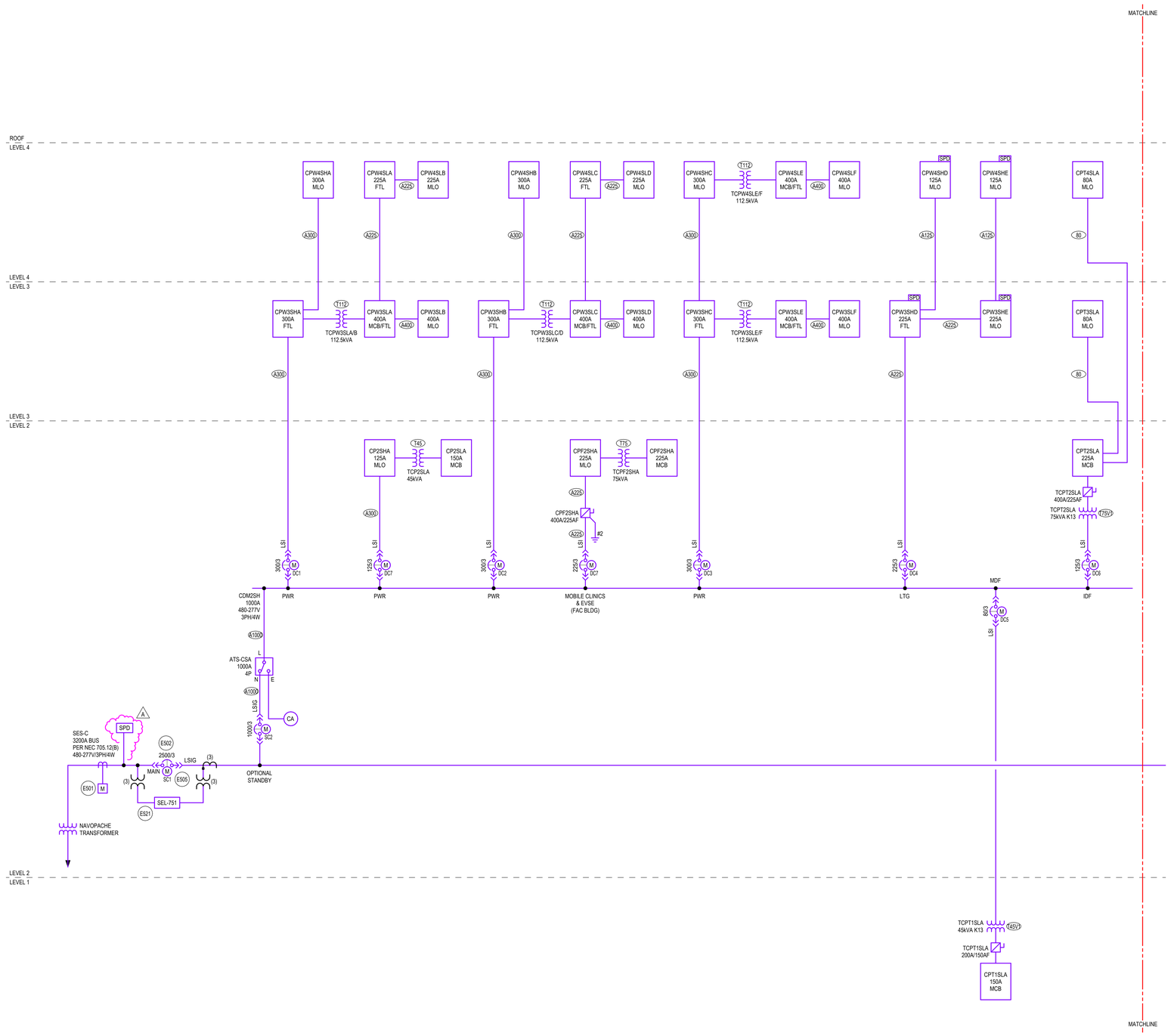

1 ONE LINE DIAGRAM - SES-C, 1 OF 2
SCALE: NOT TO SCALE

GENERAL SHEET NOTES

A. **BASE BUILD** SCOPE SHALL ONLY INCLUDE EMPTY CONDUITS OF FEEDERS SHOWN ON THIS SHEET WITH FEEDER TAGS.
B. **ADD ALTERNATE SCOPE** SHALL INCLUDE PV PANELS, CARPORTS, DC CONDUCTORS, INVERTERS, AC CONDUCTORS, AC COMBINER BOXES, PV DISTRIBUTION BOARDS.
C. SEE DRAWING E0.1 FOR ABBREVIATIONS, SYMBOLS, GENERAL NOTES.
D. THE CONTRACTOR SHALL COORDINATE EXACT LOCATION OF EQUIPMENT POWER CONNECTIONS WITH EQUIPMENT INSTALLER PRIOR TO ROUGH-IN.
E. COORDINATE FINAL LOCATION OF MECHANICAL EQUIPMENT AND ASSOCIATED DISCONNECT SWITCHES, STARTERS, VFDS, CONTROL POWER AND OTHER POWER REQUIREMENTS WITH DIV 23 AND MECHANICAL DRAWINGS.
F. SEE MECHANICAL EQUIPMENT SCHEDULE FOR ASSOCIATED OVERCURRENT DEVICES, DISCONNECT SWITCHES, STARTERS AND WIRES.
G. VOLTAGE DROP SHALL BE LIMITED TO LESS THAN 3% FOR ALL BRANCH CIRCUITS AND 2% FOR ALL FEEDERS.
H. CONTRACTOR SHALL COORDINATE AND FIELD VERIFY REQUIREMENT OF NEUTRAL CONDUCTOR FOR ALL EQUIPMENT AND PROVIDE NEUTRAL CONDUCTOR AS NECESSARY.
I. ALL LIFE SAFETY AND LIGHTING PANELBOARDS SHALL BE EQUIPPED WITH TYPE 2 SPD.
J. ALL AUTOMATIC TRANSFER SWITCHES SHALL BE 4 POLE AND EQUIPPED WITH BYPASS ISOLATION.
K. ALL UTILITY TRANSFORMERS DESCRIBED AS NAVOPACHE TRANSFORMER TO BE COORDINATED WITH UTILITY AND PROVIDED BY UTILITY. COORDINATE ALL FINAL REQUIREMENTS AND AVAILABLE FAULT CURRENT CONTRIBUTIONS BASED ON SUPPLIED EQUIPMENT. BASIS OF DESIGN 2500KVA, AND 5%Z.
L. ELECTRICAL EQUIPMENT SHALL BE CONFIGURED AS FOLLOWS:
-SERVICE ENTRANCE SECTIONS - UL891 REAR CONNECTED SWITCHBOARD
-DISTRIBUTION SWITCHBOARDS WITH DRAWOUT CIRCUIT BREAKERS - UL891 REAR CONNECTED SWITCHBOARD
-GENERATOR PARALLELING GEAR - UL1558 SWITCHGEAR

SHEET KEYNOTES

E501 NAVOPACHE UTILITY METER. METER SHALL BE EQUIPPED WITH CAPABILITY TO INTERFACE WITH BMS. ELECTRICAL CONTRACTOR SHALL PROVIDE REQUIRED CONDUIT AND COMMUNICATION WIRING FROM METER TO POINT OF INTERFACE WITH BMS.
E502 COMPLIANCE WITH "NEC 240.87 ARC ENERGY REDUCTION" REQUIRED. REDUCTION METHOD SHALL ALLOW FOR REQUIRED SELECTIVE DEVICE COORDINATION AND ARC FLASH REQUIREMENTS. REFER TO ELECTRICAL SPECIFICATIONS FOR ADDITIONAL INFORMATION.
E505 PROVIDE PERMANENT IDENTIFICATION PLAQUE INDICATING THE FOLLOWING: ELECTRICAL SERVICE #3 OF 5. GENERATORS LOCATED IN ELECTRICAL EQUIPMENT YARD, GENERATOR DISCONNECTS LOCATED IN ADJACENT ELECTRICAL ROOM IN GMDB. PV DISCONNECT LOCATED AT END OF THIS ELECTRICAL EQUIPMENT LINEUP.
E521 PROVIDE RELAY PROTECTION ELEMENTS REQUIRED BY UTILITY AND MULTIPLE GENERATOR AND PV MONITORING AND CONTROL SYSTEM MANUFACTURER. INTEGRATE SEL RELAY AND PROGRAMMING INTO MULTIPLE GENERATOR AND PV MONITORING SYSTEM AND CIRCUIT BREAKER. PROVIDE AND PROGRAM PROTECTION ELEMENT SET POINTS AND LOGIC WITHIN THE RELAY. REFER TO SEL-751 DETAIL FOR ADDITIONAL INFORMATION.

FEEDER SCHEDULE

"X" DENOTES ALUMINUM CONDUCTORS, ALL OTHER CONDUCTORS SHALL BE COPPER

80	4#3 + 1#8 G, 1 1/4" C
A125	4#2/0 + 1#6 G, 2" C
A225	4#300KCMIL + 1#2 G, 2 1/2" C
A300	4#500KCMIL + 1#2 G, 3" C
A400	2 SETS OF 4#250KCMIL + 1#1 G, (2) 2 1/2" C
A1000	3 SETS OF 4#600KCMIL + 1#4/0 G, (3) 3 1/2" C
T45	45KVA TRANSFORMER, 480-208Y/120V, 3PH PRIMARY FEEDER: 3#3 + 1#8 G, 1 1/4" C SECONDARY FEEDER: 4#1/0 + 1#6 G, 2" C BONDING JUMPERS & GROUNDING ELECTRODE CONDUCTOR: #6
T45V1	45KVA TRANSFORMER, 480-208Y/120V, 3PH PRIMARY FEEDER: 3#1 + 1#4 G, 1 1/2" C SECONDARY FEEDER: 4#1/0 + 1#6 G, 2" C BONDING JUMPERS & GROUNDING ELECTRODE CONDUCTOR: #6
T75	75KVA TRANSFORMER, 480-208Y/120V, 3PH PRIMARY FEEDER: 3#1/0 + 1#6 G, 1 1/2" C SECONDARY FEEDER: 4#4/0 + 1#2 G, 2 1/2" C BONDING JUMPERS & GROUNDING ELECTRODE CONDUCTOR: #2
T75V1	75KVA TRANSFORMER, 480-208Y/120V, 3PH PRIMARY FEEDER: 3#3/0 + 1#4 G, 2" C SECONDARY FEEDER: 4#4/0 + 1#2 G, 2 1/2" C BONDING JUMPERS & GROUNDING ELECTRODE CONDUCTOR: #2
T112	112.5KVA TRANSFORMER, 480-208Y/120V, 3PH PRIMARY FEEDER: 3#3/0 + 1#6 G, 2" C SECONDARY FEEDER: 2 SETS OF 4#3/0 + 1#2 G, (2) 2" C BONDING JUMPERS & GROUNDING ELECTRODE CONDUCTOR: #2

IHS Whiteriver Hospital

200 W Hospital Drive
Whiteriver, Arizona, 85941

IHS Project #: 131445
IHS Contract #: 75H70123R00008
IHS Award Date: 02/02/2024

BASED ON PROGRAM OF REQUIREMENTS DATED [**03/26/22**], POR AMENDMENT DATED [**02/03/25**], AND ON SCHEMATIC DRAWINGS APPROVED [**11/19/24**].

SMITHGROUP

455 NORTH THIRD STREET
SUITE 250
PHOENIX, AZ 85004
602.265.2200
smithgroup.com

ISSUED FOR	DATE
BID ADDENDUM-A	16APR26
FINAL CONSTRUCTION DOCUMENTS	05MAR26

SEALS AND SIGNATURES

Registered Professional Engineer's Certificate No. 54673 DANIEL L. PETERSON Date Signed 04-16-26 ARIZONA, U.S.A.
EXPIRES: 6-30-28

ELECTRICAL ONE LINE DIAGRAM - SES-C, 1 OF 2

Drawn By: Whittington Checked By: Baca
14904.000
PROJECT NUMBER

CD **E5.3.1**
SHEET NUMBER

Plot Date: 4/16/2026 9:57:54 AM Whittington

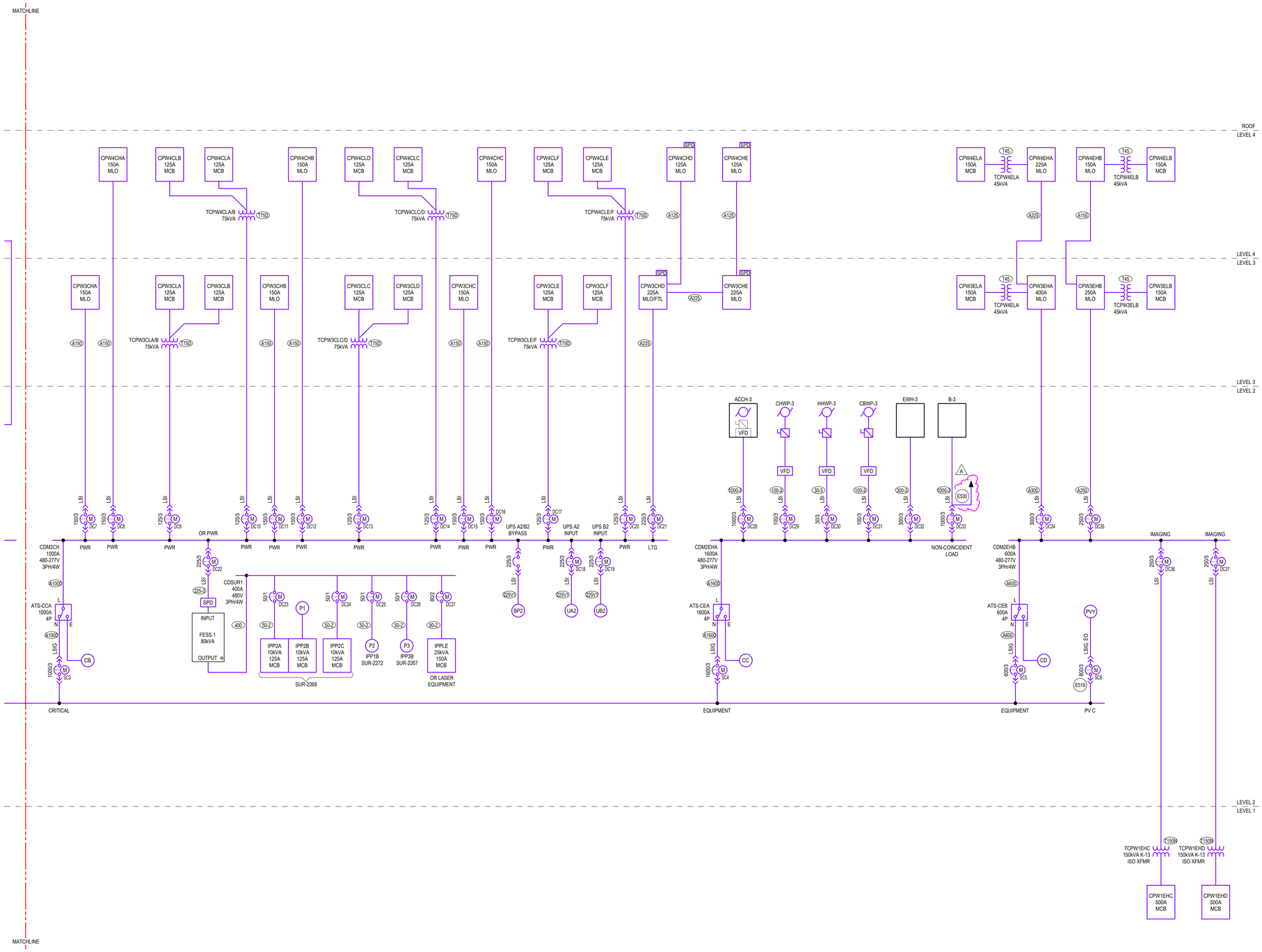

1 ONE LINE DIAGRAM - SES-C, 2 OF 2
SCALE: NOT TO SCALE

GENERAL SHEET NOTES

A. **BASE BUILD** SCOPE SHALL ONLY INCLUDE EMPTY CONDUITS OF FEEDERS SHOWN ON THIS SHEET WITH FEEDER TAGS.
B. **ADD ALTERNATE SCOPE** SHALL INCLUDE PV PANELS, CARPORTS, DC CONDUCTORS, INVERTERS, AC CONDUCTORS, AC COMBINER BOXES, PV DISTRIBUTION BOARDS.
C. SEE DRAWING E0.1 FOR ABBREVIATIONS, SYMBOLS, GENERAL NOTES.
D. THE CONTRACTOR SHALL COORDINATE EXACT LOCATION OF EQUIPMENT POWER CONNECTIONS WITH EQUIPMENT INSTALLER PRIOR TO ROUGH-IN.
E. COORDINATE FINAL LOCATION OF MECHANICAL EQUIPMENT AND ASSOCIATED DISCONNECT SWITCHES, STARTERS, VFDS, CONTROL POWER AND OTHER POWER REQUIREMENTS WITH DIV 23 AND MECHANICAL DRAWINGS.
F. SEE MECHANICAL EQUIPMENT SCHEDULE FOR ASSOCIATED OVERCURRENT DEVICES, DISCONNECT SWITCHES, STARTERS AND WIRES.
G. VOLTAGE DROP SHALL BE LIMITED TO LESS THAN 3% FOR ALL BRANCH CIRCUITS AND 2% FOR ALL FEEDERS.
H. CONTRACTOR SHALL COORDINATE AND FIELD VERIFY REQUIREMENT OF NEUTRAL CONDUCTOR FOR ALL EQUIPMENT AND PROVIDE NEUTRAL CONDUCTOR AS NECESSARY.
I. ALL LIFE SAFETY AND LIGHTING PANELBOARDS SHALL BE EQUIPPED WITH TYPE 2 SPD.
J. ALL AUTOMATIC TRANSFER SWITCHES SHALL BE 4 POLE AND EQUIPPED WITH BYPASS ISOLATION.
K. ALL UTILITY TRANSFORMERS DESCRIBED AS NAVOPACHE TRANSFORMER TO BE COORDINATED WITH UTILITY AND PROVIDED BY UTILITY. COORDINATE ALL FINAL REQUIREMENTS AND AVAILABLE FAULT CURRENT CONTRIBUTIONS BASED ON SUPPLIED EQUIPMENT. BASIS OF DESIGN 2500KVA, AND 5%Z.
L. ELECTRICAL EQUIPMENT SHALL BE CONFIGURED AS FOLLOWS:
-SERVICE ENTRANCE SECTIONS - UL891 REAR CONNECTED SWITCHBOARD
-DISTRIBUTION SWITCHBOARDS WITH DRAWOUT CIRCUIT BREAKERS - UL891 REAR CONNECTED SWITCHBOARD
-GENERATOR PARALLELING GEAR - UL1558 SWITCHGEAR

SHEET KEYNOTES

E519 PV CIRCUIT BREAKER SHALL BE LOCATED AT LAST BUSSED SPACE. PROVIDE PERMANENT IDENTIFICATION PLAQUE INDICATING THE FOLLOWING: PV POWER SOURCE - DO NOT RELOCATE THIS CIRCUIT BREAKER
A
E530 PROVIDE SHUNT TRIP CIRCUIT BREAKER FOR INTERFACE WITH BOILER EMERGENCY SHUTDOWN EPO SWITCHES. REFER TO EMP2.2.G FOR ADDITIONAL INFORMATION.

FEEDER SCHEDULE

"A" DENOTES ALUMINUM CONDUCTORS, ALL OTHER CONDUCTORS SHALL BE COPPER

30-3	3#10 + 1#10 G, 3/4" C
50-2	2#6 + 1#10 G, 3/4" C
80-2	2#3 + 1#8 G, 1 1/4" C
100-3	3#1 + 1#8 G, 1 1/2" C
225-3	3#4/0 + 1#4 G, 2" C
225V1	4#250KCMIL + 1#3 G, 2 1/2" C
300-3	3#350KCMIL + 1#4 G, 3" C
400	2 SETS OF 4#3/0 + 1#3 G, (2) 2" C
1000-3	3 SETS OF 3#400KCMIL + 1#2/0 G, (3) 3" C
A125	4#2/0 + 1#6 G, 2" C
A150	4#3/0 + 1#4 G, 2" C
A225	4#300KCMIL + 1#2 G, 2 1/2" C
A250	4#350KCMIL + 1#2 G, 2 1/2" C
A300	4#500KCMIL + 1#2 G, 3" C
A600	2 SETS OF 4#500KCMIL + 1#2/0 G, (2) 3" C
A1000	3 SETS OF 4#600KCMIL + 1#4/0 G, (3) 3 1/2" C
A1600	5 SETS OF 4#600KCMIL + 1#350KCMIL G, (5) 3 1/2" C
T45	45KVA TRANSFORMER, 480-208Y/120V, 3PH PRIMARY FEEDER: 3#3 + 1#8 G, 1 1/4" C SECONDARY FEEDER: 4#1/0 + 1#6 G, 2" C BONDING JUMPERS & GROUNDING ELECTRODE CONDUCTOR: #6
T75D	75KVA TRANSFORMER, 480-208Y/120V, 3PH PRIMARY FEEDER: 3#1/0 + 1#6 G, 1 1/2" C SECONDARY FEEDERS: 4#1/0 + 1#2 G, 2" C TO EACH PANEL BONDING JUMPERS & GROUNDING ELECTRODE CONDUCTOR: #2
T150N	150KVA TRANSFORMER, 480-208Y/120V, 3PH PRIMARY FEEDER: 3#250KCMIL + 1#4 G, 2 1/2" C SECONDARY FEEDER: 2 SETS OF 3#250KCMIL, 1#500KCMIL N + 1/0 G, (2) 3" C BONDING JUMPERS & GROUNDING ELECTRODE CONDUCTOR: #1/0

IHS Whiteriver Hospital

200 W Hospital Drive
Whiteriver, Arizona, 85941

IHS Project #: 131445
IHS Contract #: 75H70123R00008
IHS Award Date: 02/02/2024

BASED ON PROGRAM OF REQUIREMENTS DATED [**03/26/22**], POR AMENDMENT DATED [**02/03/25**], AND ON SCHEMATIC DRAWINGS APPROVED [**11/19/24**].

SMITHGROUP

455 NORTH THIRD STREET
SUITE 250
PHOENIX, AZ 85004
602.265.2200
smithgroup.com

ISSUED FOR	DATE
BID ADDENDUM-A	16APR26
FINAL CONSTRUCTION DOCUMENTS	05MAR26

SEALS AND SIGNATURES

Registered Professional Engineer CERTIFICATE NO. 54673 DANIEL L. PETERSON Date Signed 04-16-26 STATE OF ARIZONA U.S.A.

EXPIRES: 6-30-28

ELECTRICAL ONE LINE DIAGRAM - SES-C, 2 OF 2

Drawn By: Whittington Checked By: Baca

14904.000

PROJECT NUMBER

CD **E5.3.2**

SHEET NUMBER

Plot Date: 4/16/2026 9:58:00 AM Whittington

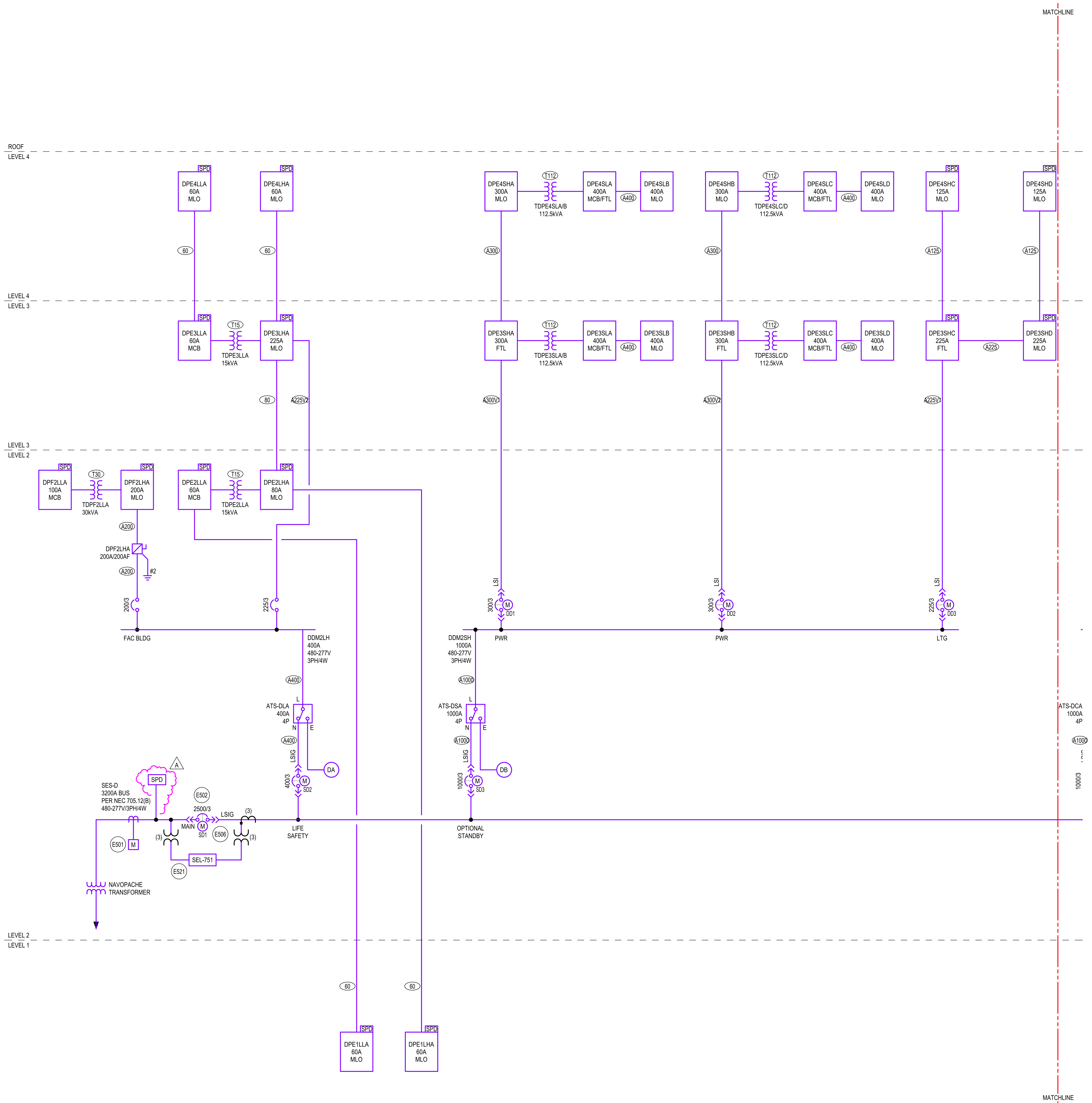

1 ONE LINE DIAGRAM - SES-D, 1 OF 2

SCALE: NOT TO SCALE

GENERAL SHEET NOTES

A. **BASE BUILD** SCOPE SHALL ONLY INCLUDE EMPTY CONDUITS OF FEEDERS SHOWN ON THIS SHEET WITH FEEDER TAGS.
B. **ADD ALTERNATE SCOPE** SHALL INCLUDE PV PANELS, CARPORTS, DC CONDUCTORS, INVERTERS, AC CONDUCTORS, AC COMBINER BOXES, PV DISTRIBUTION BOARDS.
C. SEE DRAWING E0.1 FOR ABBREVIATIONS, SYMBOLS, GENERAL NOTES.
D. THE CONTRACTOR SHALL COORDINATE EXACT LOCATION OF EQUIPMENT POWER CONNECTIONS WITH EQUIPMENT INSTALLER PRIOR TO ROUGH-IN.
E. COORDINATE FINAL LOCATION OF MECHANICAL EQUIPMENT AND ASSOCIATED DISCONNECT SWITCHES, STARTERS, VFDS, CONTROL POWER AND OTHER POWER REQUIREMENTS WITH DIV 23 AND MECHANICAL DRAWINGS.
F. SEE MECHANICAL EQUIPMENT SCHEDULE FOR ASSOCIATED OVERCURRENT DEVICES, DISCONNECT SWITCHES, STARTERS AND WIRES.
G. VOLTAGE DROP SHALL BE LIMITED TO LESS THAN 3% FOR ALL BRANCH CIRCUITS AND 2% FOR ALL FEEDERS.
H. CONTRACTOR SHALL COORDINATE AND FIELD VERIFY REQUIREMENT OF NEUTRAL CONDUCTOR FOR ALL EQUIPMENT AND PROVIDE NEUTRAL CONDUCTOR AS NECESSARY.
I. ALL LIFE SAFETY AND LIGHTING PANELBOARDS SHALL BE EQUIPPED WITH TYPE 2 SPD.
J. ALL AUTOMATIC TRANSFER SWITCHES SHALL BE 4 POLE AND EQUIPPED WITH BYPASS ISOLATION.
K. ALL UTILITY TRANSFORMERS DESCRIBED AS NAVOPACHE TRANSFORMER TO BE COORDINATED WITH UTILITY AND PROVIDED BY UTILITY. COORDINATE ALL FINAL REQUIREMENTS AND AVAILABLE FAULT CURRENT CONTRIBUTIONS BASED ON SUPPLIED EQUIPMENT. BASIS OF DESIGN 2500KVA, AND 5%Z.
L. (A) ELECTRICAL EQUIPMENT SHALL BE CONFIGURED AS FOLLOWS:
-SERVICE ENTRANCE SECTIONS - UL891 REAR CONNECTED SWITCHBOARD
-DISTRIBUTION SWITCHBOARDS WITH DRAWOUT CIRCUIT BREAKERS - UL891 REAR CONNECTED SWITCHBOARD
-GENERATOR PARALLELING GEAR - UL1558 SWITCHGEAR

SHEET KEYNOTES

E501 NAVOPACHE UTILITY METER. METER SHALL BE EQUIPPED WITH CAPABILITY TO INTERFACE WITH BMS. ELECTRICAL CONTRACTOR SHALL PROVIDE REQUIRED CONDUIT AND COMMUNICATION WIRING FROM METER TO POINT OF INTERFACE WITH BMS.

E502 COMPLIANCE WITH "NEC 240.87 ARC ENERGY REDUCTION" REQUIRED. REDUCTION METHOD SHALL ALLOW FOR REQUIRED SELECTIVE DEVICE COORDINATION AND ARC FLASH REQUIREMENTS. REFER TO ELECTRICAL SPECIFICATIONS FOR ADDITIONAL INFORMATION.

E506 PROVIDE PERMANENT IDENTIFICATION PLAQUE INDICATING THE FOLLOWING: ELECTRICAL SERVICE #4 OF 5. GENERATORS LOCATED IN ELECTRICAL EQUIPMENT YARD, GENERATOR DISCONNECTS LOCATED IN ADJACENT ELECTRICAL ROOM IN GMDB. PV DISCONNECT LOCATED AT END OF THIS ELECTRICAL EQUIPMENT LINEUP.

E521 PROVIDE RELAY PROTECTION ELEMENTS REQUIRED BY UTILITY AND MULTIPLE GENERATOR AND PV MONITORING AND CONTROL SYSTEM MANUFACTURER. INTEGRATE SEL RELAY AND PROGRAMMING INTO MULTIPLE GENERATOR AND PV MONITORING SYSTEM AND CIRCUIT BREAKER. PROVIDE AND PROGRAM PROTECTION ELEMENT SET POINTS AND LOGIC WITHIN THE RELAY. REFER TO SEL-751 DETAIL FOR ADDITIONAL INFORMATION.

FEEDER SCHEDULE

"A" DENOTES ALUMINUM CONDUCTORS, ALL OTHER CONDUCTORS SHALL BE COPPER

60	4#4 + 1#10 G, 1 1/4" C
80	4#3 + 1#8 G, 1 1/4" C
A125	4#2/0 + 1#6 G, 2" C
A200	4#250KCMIL + 1#4 G, 2 1/2" C
A225	4#300KCMIL + 1#2 G, 2 1/2" C
A225V1	4#400KCMIL + 1#1/0 G, 2 1/2" C
A225V2	4#350KCMIL + 1#1/0 G, 2 1/2" C
A300	4#500KCMIL + 1#2 G, 3" C
A300V1	4#600KCMIL + 1#1 G, 3" C
A300V2	2 SETS OF 4#400KCMIL + 1#2/0 G, (2) 2 1/2" C
A400	2 SETS OF 4#250KCMIL + 1#1 G, (2) 2 1/2" C
A1000	3 SETS OF 4#600KCMIL + 1#4/0 G, (3) 3 1/2" C
T15	15KVA TRANSFORMER, 480-208Y/120V, 3PH PRIMARY FEEDER: 3#10 + 1#10 G, 3/4" C SECONDARY FEEDER: 4#4 + 1#8 G, 1 1/4" C BONDING JUMPERS & GROUNDING ELECTRODE CONDUCTOR: #8
T30	30KVA TRANSFORMER, 480-208Y/120V, 3PH PRIMARY FEEDER: 3#6 + 1#10 G, 3/4" C SECONDARY FEEDER: 4#1 + 1#6 G, 1 1/2" C BONDING JUMPERS & GROUNDING ELECTRODE CONDUCTOR: #6
T112	112.5KVA TRANSFORMER, 480-208Y/120V, 3PH PRIMARY FEEDER: 3#3/0 + 1#6 G, 2" C SECONDARY FEEDER: 2 SETS OF 4#3/0 + 1#2 G, (2) 2" C BONDING JUMPERS & GROUNDING ELECTRODE CONDUCTOR: #2

IHS Whiteriver Hospital

200 W Hospital Drive
Whiteriver, Arizona, 85941

IHS Project #: 131445
IHS Contract #: 75H70123R00008
IHS Award Date: 02/02/2024

BASED ON PROGRAM OF REQUIREMENTS DATED [**03/26/22**], POR AMENDMENT DATED [**02/03/25**], AND ON SCHEMATIC DRAWINGS APPROVED [**11/19/24**].

SMITHGROUP

455 NORTH THIRD STREET
SUITE 250
PHOENIX, AZ 85004
602.265.2200
smithgroup.com

ISSUED FOR	DATE
BID ADDENDUM-A	16APR26
FINAL CONSTRUCTION DOCUMENTS	05MAR26

SEALS AND SIGNATURES

Registered Professional Engineer (Electrical) CERTIFICATE NO. 54673 DANIEL L. PETERSON Date Signed 04-16-26 ARIZONA, U.S.A.
EXPIRES: 6-30-28

ELECTRICAL ONE LINE DIAGRAM - SES-D, 1 OF 2

Drawn By: Whittington Checked By: Baca

14904.000
PROJECT NUMBER

CD E5.4.1
SHEET NUMBER

Plot Date: 4/16/2026 9:58:05 AM Whittington

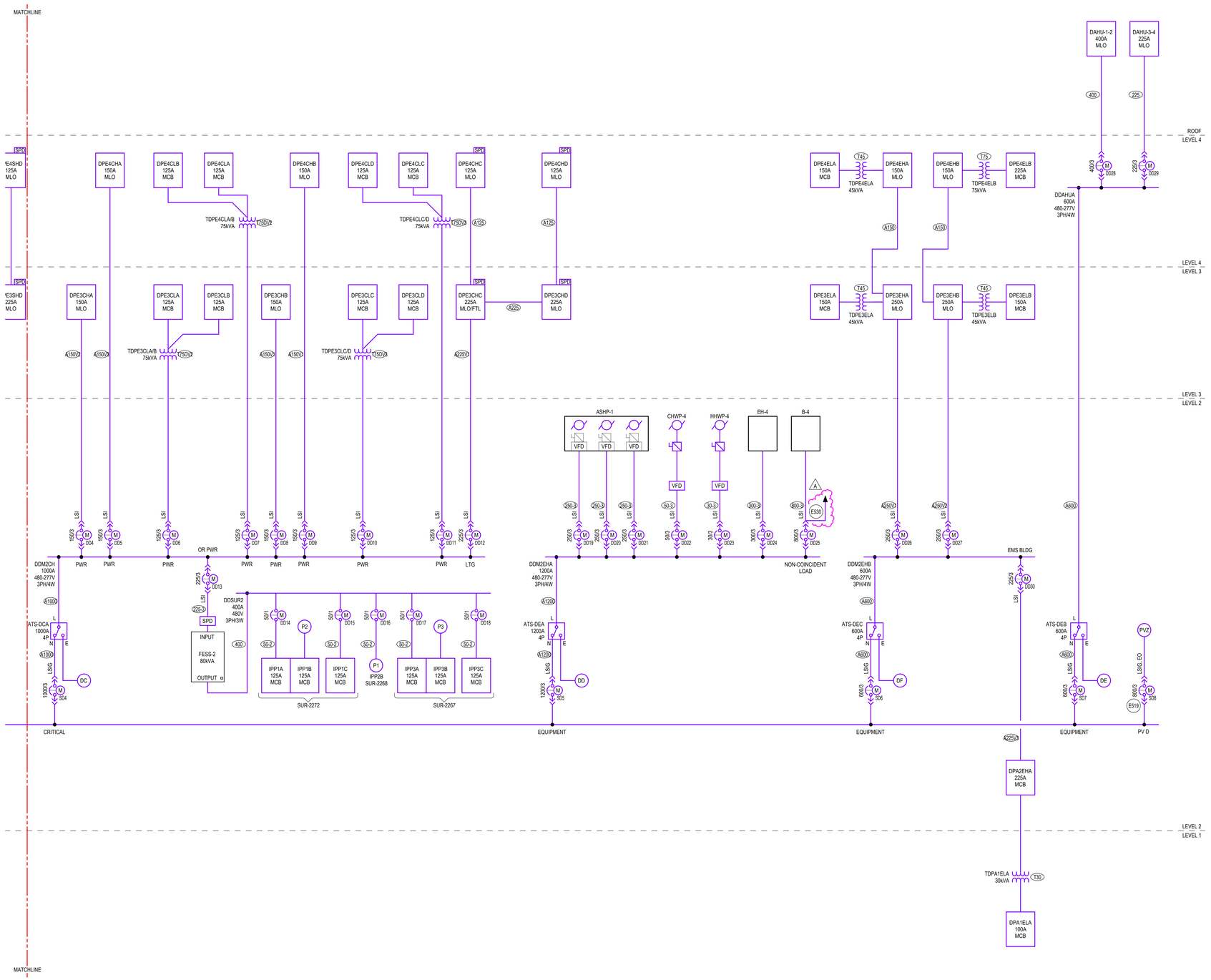

1 ONE LINE DIAGRAM - SES-D, 2 OF 2
SCALE: NOT TO SCALE

GENERAL SHEET NOTES

A. **BASE BUILD** SCOPE SHALL ONLY INCLUDE EMPTY CONDUITS OF FEEDERS SHOWN ON THIS SHEET WITH FEEDER TAGS.
B. **ADD ALTERNATE SCOPE** SHALL INCLUDE PV PANELS, CARPORTS, DC CONDUCTORS, INVERTERS, AC CONDUCTORS, AC COMBINER BOXES, PV DISTRIBUTION BOARDS.
C. SEE DRAWING E0.1 FOR ABBREVIATIONS, SYMBOLS, GENERAL NOTES.
D. THE CONTRACTOR SHALL COORDINATE EXACT LOCATION OF EQUIPMENT POWER CONNECTIONS WITH EQUIPMENT INSTALLER PRIOR TO ROUGH-IN.
E. COORDINATE FINAL LOCATION OF MECHANICAL EQUIPMENT AND ASSOCIATED DISCONNECT SWITCHES, STARTERS, VFDS, CONTROL POWER AND OTHER POWER REQUIREMENTS WITH DIV 23 AND MECHANICAL DRAWINGS.
F. SEE MECHANICAL EQUIPMENT SCHEDULE FOR ASSOCIATED OVERCURRENT DEVICES, DISCONNECT SWITCHES, STARTERS AND WIRES.
G. VOLTAGE DROP SHALL BE LIMITED TO LESS THAN 3% FOR ALL BRANCH CIRCUITS AND 2% FOR ALL FEEDERS.
H. CONTRACTOR SHALL COORDINATE AND FIELD VERIFY REQUIREMENT OF NEUTRAL CONDUCTOR FOR ALL EQUIPMENT AND PROVIDE NEUTRAL CONDUCTOR AS NECESSARY.
I. ALL LIFE SAFETY AND LIGHTING PANELBOARDS SHALL BE EQUIPPED WITH TYPE 2 SPD.
J. ALL AUTOMATIC TRANSFER SWITCHES SHALL BE 4 POLE AND EQUIPPED WITH BYPASS ISOLATION.
K. ALL UTILITY TRANSFORMERS DESCRIBED AS NAVOPACHE TRANSFORMER TO BE COORDINATED WITH UTILITY AND PROVIDED BY UTILITY. COORDINATE ALL FINAL REQUIREMENTS AND AVAILABLE FAULT CURRENT CONTRIBUTIONS BASED ON SUPPLIED EQUIPMENT. BASIS OF DESIGN 2500KVA, AND 5%Z.
L. ELECTRICAL EQUIPMENT SHALL BE CONFIGURED AS FOLLOWS:
-SERVICE ENTRANCE SECTIONS - UL891 REAR CONNECTED SWITCHBOARD
-DISTRIBUTION SWITCHBOARDS WITH DRAWOUT CIRCUIT BREAKERS - UL891 REAR CONNECTED SWITCHBOARD
-GENERATOR PARALLELING GEAR - UL1558 SWITCHGEAR

SHEET KEYNOTES

E519 PV CIRCUIT BREAKER SHALL BE LOCATED AT LAST BUSSED SPACE. PROVIDE PERMANENT IDENTIFICATION PLAQUE INDICATING THE FOLLOWING: PV POWER SOURCE - DO NOT RELOCATE THIS CIRCUIT BREAKER
E530 PROVIDE SHUNT TRIP CIRCUIT BREAKER FOR INTERFACE WITH BOILER EMERGENCY SHUTDOWN EPO SWITCHES. REFER TO EMP2.2.G FOR ADDITIONAL INFORMATION.

FEEDER SCHEDULE

"X" DENOTES ALUMINUM CONDUCTORS, ALL OTHER CONDUCTORS SHALL BE COPPER

30-3	3#10 + 1#10 G, 3/4" C
50-2	2#6 + 1#10 G, 3/4" C
50-3	3#6 + 1#10 G, 3/4" C
225	4#4/0 + 1#4 G, 2 1/2" C
225-3	3#4/0 + 1#4 G, 2" C
250-3	3#250KCMIL + 1#4 G, 2 1/2" C
300-3	3#350KCMIL + 1#4 G, 3" C
400	2 SETS OF 4#3/0 + 1#3 G, (2) 2" C
800-3	3 SETS OF 3#300KCMIL + 1#1/0 G, (3) 3" C
A125	4#2/0 + 1#6 G, 2" C
A150	4#3/0 + 1#4 G, 2" C
A150V1	4#400KCMIL + 1#1/0 G, 2-1/2" C
A150V2	4#250KCMIL + 1#2 G, 2-1/2" C
A150V3	4#300KCMIL + 1#1 G, 2-1/2" C
A225	4#300KCMIL + 1#2 G, 2 1/2" C
A225V1	4#400KCMIL + 1#1/0 G, 2 1/2" C
A225V3	4#500KCMIL + 1#2/0 G, 3" C
A250V1	4#400KCMIL + 1#1 G, 2 1/2" C
A250V2	4#600KCMIL + 1#2/0 G, 3" C
A600	2 SETS OF 4#500KCMIL + 1#2/0 G, (2) 3" C
A1000	3 SETS OF 4#600KCMIL + 1#4/0 G, (3) 3 1/2" C
A1200	4 SETS OF 4#500KCMIL + 1#250KCMIL G, (4) 3" C
T30	30KVA TRANSFORMER, 480-208Y/120V, 3PH PRIMARY FEEDER: 3#6 + 1#10 G, 3/4" C SECONDARY FEEDER: 4#1 + 1#6 G, 1 1/2" C BONDING JUMPERS & GROUNDING ELECTRODE CONDUCTOR: #6
T45	45KVA TRANSFORMER, 480-208Y/120V, 3PH PRIMARY FEEDER: 3#3 + 1#8 G, 1 1/4" C SECONDARY FEEDER: 4#1/0 + 1#6 G, 2" C BONDING JUMPERS & GROUNDING ELECTRODE CONDUCTOR: #6
T75	75KVA TRANSFORMER, 480-208Y/120V, 3PH PRIMARY FEEDER: 3#1/0 + 1#6 G, 1 1/2" C SECONDARY FEEDER: 4#4/0 + 1#2 G, 2 1/2" C BONDING JUMPERS & GROUNDING ELECTRODE CONDUCTOR: #2
T75DV2	75KVA TRANSFORMER, 480-208Y/120V, 3PH PRIMARY FEEDER: 3#2/0 + 1#4 G, 1 1/2" C SECONDARY FEEDERS: 4#1/0 + 1#2 G, 2" C TO EACH PANEL BONDING JUMPERS & GROUNDING ELECTRODE CONDUCTOR: #2
T75DV3	75KVA TRANSFORMER, 480-208Y/120V, 3PH PRIMARY FEEDER: 3#4/0 + 1#3 G, 2" C SECONDARY FEEDERS: 4#1/0 + 1#2 G, 2" C TO EACH PANEL BONDING JUMPERS & GROUNDING ELECTRODE CONDUCTOR: #2

IHS Whiteriver Hospital

200 W Hospital Drive
Whiteriver, Arizona, 85941

IHS Project #: 131445
IHS Contract #: 75H70123R00008
IHS Award Date: 02/02/2024

BASED ON PROGRAM OF REQUIREMENTS DATED [**03/26/22**], POR AMENDMENT DATED [**02/03/25**], AND ON SCHEMATIC DRAWINGS APPROVED [**11/19/24**].

SMITHGROUP

455 NORTH THIRD STREET
SUITE 250
PHOENIX, AZ 85004
602.265.2200
smithgroup.com

ISSUED FOR	DATE
BID ADDENDUM-A	16APR26
FINAL CONSTRUCTION DOCUMENTS	05MAR26

SEALS AND SIGNATURES

Registered Professional Engineer's Certificate No. 54673 DANIEL L. PETERSON Date Signed 04-16-26 ARIZONA, U.S.A.
EXPIRES: 6-30-28

ELECTRICAL ONE LINE DIAGRAM - SES-D, 2 OF 2

Drawn By: Whittington Checked By: Baca
14904.000
PROJECT NUMBER

CD **E5.4.2**
SHEET NUMBER

Plot Date: 4/16/2026 9:58:12 AM Whittington

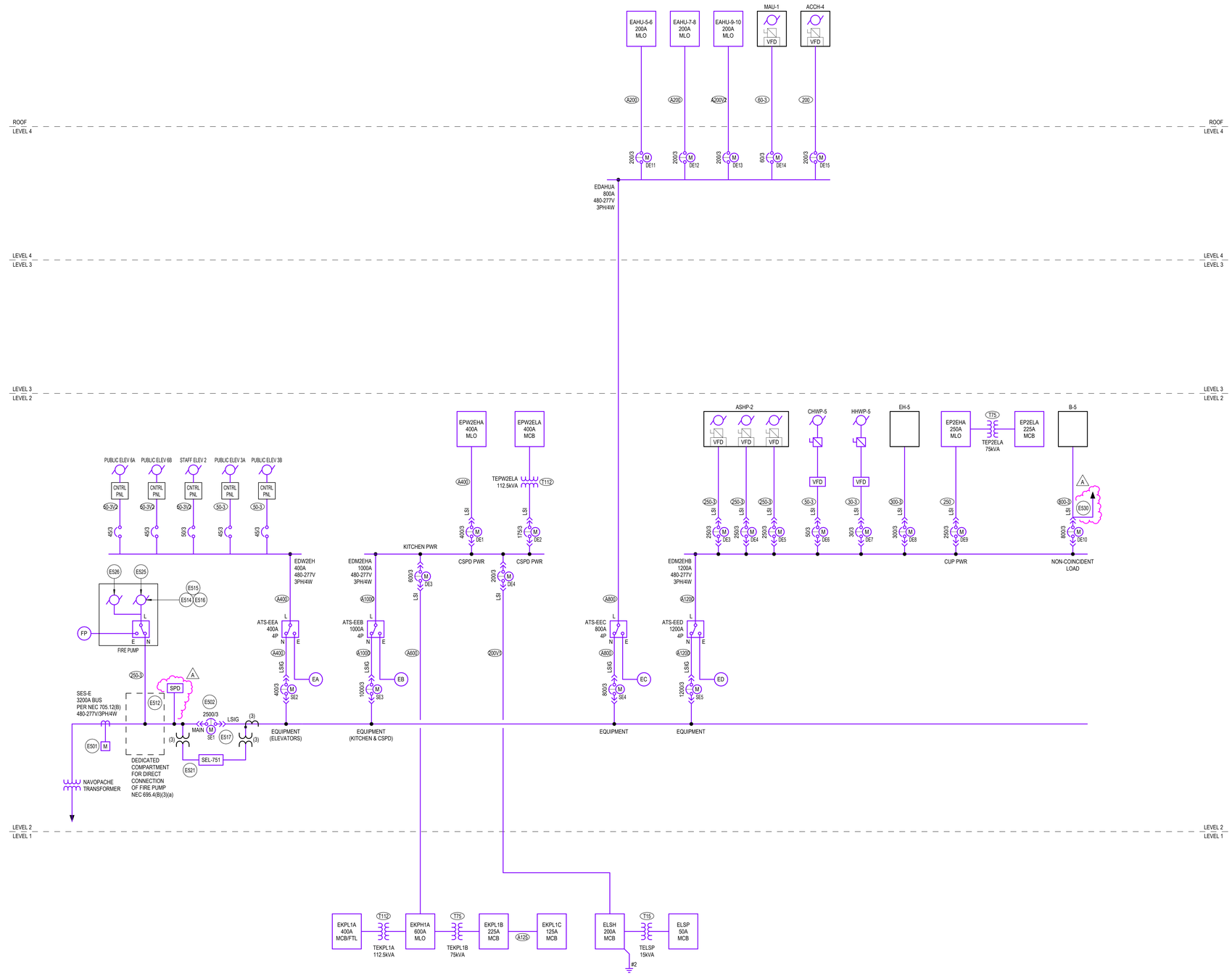

1 ONE LINE DIAGRAM - SES-E, 1 OF 2
SCALE: NOT TO SCALE

GENERAL SHEET NOTES

A. **BASE BUILD** SCOPE SHALL ONLY INCLUDE EMPTY CONDUITS OF FEEDERS SHOWN ON THIS SHEET WITH FEEDER TAGS.
B. **ADD ALTERNATE SCOPE** SHALL INCLUDE PV PANELS, CARPORTS, DC CONDUCTORS, INVERTERS, AC CONDUCTORS, AC COMBINER BOXES, PV DISTRIBUTION BOARDS.
C. SEE DRAWING E0.1 FOR ABBREVIATIONS, SYMBOLS, GENERAL NOTES.
D. THE CONTRACTOR SHALL COORDINATE EXACT LOCATION OF EQUIPMENT POWER CONNECTIONS WITH EQUIPMENT INSTALLER PRIOR TO ROUGH-IN.
E. COORDINATE FINAL LOCATION OF MECHANICAL EQUIPMENT AND ASSOCIATED DISCONNECT SWITCHES, STARTERS, VFDS, CONTROL POWER AND OTHER POWER REQUIREMENTS WITH DIV 23 AND MECHANICAL DRAWINGS.
F. SEE MECHANICAL EQUIPMENT SCHEDULE FOR ASSOCIATED OVERCURRENT DEVICES, DISCONNECT SWITCHES, STARTERS AND WIRES.
G. VOLTAGE DROP SHALL BE LIMITED TO LESS THAN 3% FOR ALL BRANCH CIRCUITS AND 2% FOR ALL FEEDERS.
H. CONTRACTOR SHALL COORDINATE AND FIELD VERIFY REQUIREMENT OF NEUTRAL CONDUCTOR FOR ALL EQUIPMENT AND PROVIDE NEUTRAL CONDUCTOR AS NECESSARY.
I. ALL LIFE SAFETY AND LIGHTING PANELBOARDS SHALL BE EQUIPPED WITH TYPE 2 SPD.
J. ALL AUTOMATIC TRANSFER SWITCHES SHALL BE 4 POLE AND EQUIPPED WITH BYPASS ISOLATION.
K. ALL UTILITY TRANSFORMERS DESCRIBED AS NAVOPACHE TRANSFORMER TO BE COORDINATED WITH UTILITY AND PROVIDED BY UTILITY. COORDINATE ALL FINAL REQUIREMENTS AND AVAILABLE FAULT CURRENT CONTRIBUTIONS BASED ON SUPPLIED EQUIPMENT. BASIS OF DESIGN 2500KVA, AND 5%Z.
A L. ELECTRICAL EQUIPMENT SHALL BE CONFIGURED AS FOLLOWS:
-SERVICE ENTRANCE SECTIONS - UL891 REAR CONNECTED SWITCHBOARD
-DISTRIBUTION SWITCHBOARDS WITH DRAWOUT CIRCUIT BREAKERS - UL891 REAR CONNECTED SWITCHBOARD
-GENERATOR PARALLELING GEAR - UL1558 SWITCHGEAR

SHEET KEYNOTES

E501 NAVOPACHE UTILITY METER. METER SHALL BE EQUIPPED WITH CAPABILITY TO INTERFACE WITH BMS. ELECTRICAL CONTRACTOR SHALL PROVIDE REQUIRED CONDUIT AND COMMUNICATION WIRING FROM METER TO POINT OF INTERFACE WITH BMS.
E502 COMPLIANCE WITH "NEC 240.87 ARC ENERGY REDUCTION" REQUIRED. REDUCTION METHOD SHALL ALLOW FOR REQUIRED SELECTIVE DEVICE COORDINATION AND ARC FLASH REQUIREMENTS. REFER TO ELECTRICAL SPECIFICATIONS FOR ADDITIONAL INFORMATION.
E512 DIRECT CONNECTION OF FIRE PUMP AS ALLOWED BY NEC 695.3(A)(1) AND IN COMPLIANCE WITH NEC 695.4(A).
E514 FIRE PUMP CONTROLLER SHALL BE MONITORED BY THE FIRE ALARM SYSTEM. LOSS OF NORMAL POWER SHALL ACTIVATE SUPERVISORY ALARM AS FACP.
E515 PROVIDE CONTROL WIRING IN COMPLIANCE WITH NEC 695.14. BMS MONITORING SHALL BE PROVIDED.
E516 LISTED SINGLE POINT NORMAL & EMERGENCY CONNECTION (WITH INTEGRAL AUTOMATIC TRANSFER SWITCH). INTERNAL WIRING FROM CONTROLLER(S) TO PUMP MOTOR(S) SHALL BE RUN IN CONDUIT TYPE AS SPECIFIED BY NEC 695.6(D) & (F). ALL INTERNAL WIRING SHALL BE PROVIDED BY EQUIPMENT MANUFACTURER. ALL REQUIRED MARKINGS & APPROPRIATE PLAQUES SHALL BE PROVIDED IN COMPLIANCE WITH THE NEC.
E517 PROVIDE PERMANENT IDENTIFICATION PLAQUE INDICATING THE FOLLOWING: ELECTRICAL SERVICE #5 OF 5. GENERATORS LOCATED IN ELECTRICAL EQUIPMENT YARD. GENERATOR DISCONNECTS LOCATED IN ADJACENT ELECTRICAL ROOM IN GMDB. PV DISCONNECT LOCATED AT END OF THIS ELECTRICAL EQUIPMENT LINEUP.
E521 PROVIDE RELAY PROTECTION ELEMENTS REQUIRED BY UTILITY AND MULTIPLE GENERATOR AND PV MONITORING AND CONTROL SYSTEM MANUFACTURER. INTEGRATE SEL RELAY AND PROGRAMMING INTO MULTIPLE GENERATOR AND PV MONITORING SYSTEM AND CIRCUIT BREAKER. PROVIDE AND PROGRAM PROTECTION ELEMENT SET POINTS AND LOGIC WITHIN THE RELAY. REFER TO SEL-751 DETAIL FOR ADDITIONAL INFORMATION.
E525 ELECTRIC FIRE PUMP BY FIRE SUPPRESSION DELEGATED DESIGN. PROVIDED WITH ATS INTEGRAL TO PUMP CONTROLLER WITH INTEGRAL DISCONNECT. PROVIDE CONNECTION AS SHOWN FOR UP TO 150HP 480V/3-PHASE ELECTRIC PUMP.
E526 ELECTRIC FIRE BOOSTER JOCKEY PUMP BY FIRE SUPPRESSION DELEGATED DESIGN. PROVIDED WITH PUMP CONTROLLER WITH INTEGRAL DISCONNECT. PROVIDE CONNECTION AS SHOWN FOR UP TO 1.5HP 480V/3-PHASE ELECTRIC PUMP. TAP SHALL ORIGINATE WITHIN FIRE PUMP ROOM AND BE LESS THAN 10FT CABLE LENGTH TO CONTROLLER PER TAP RULES.
A E530 PROVIDE SHUNT TRIP CIRCUIT BREAKER FOR INTERFACE WITH BOILER EMERGENCY SHUTDOWN EPO SWITCHES. REFER TO EMP2.2.G FOR ADDITIONAL INFORMATION.

FEEDER SCHEDULE

"X" DENOTES ALUMINUM CONDUCTORS, ALL OTHER CONDUCTORS SHALL BE COPPER

30-3	3#10 + 1#10 G, 3/4" C
50-3	3#6 + 1#10 G, 3/4" C
50-3V2	3#4 + 1#6 G, 1" C
60-3	3#4 + 1#10 G, 1 1/4" C
200	4#3/0 + 1#6 G, 2" C
200V1	2 SETS OF 4#300KCMIL + 1#10 G, (2) 3" C
250	4#250KCMIL + 1#4 G, 3"C
250-3	3#250KCMIL + 1#4 G, 2 1/2" C
300-3	3#350KCMIL + 1#4 G, 3" C
800-3	3 SETS OF 3#300KCMIL + 1#10 G, (3) 3" C
A125	4#2/0 + 1#6 G, 2" C
A200	4#250KCMIL + 1#4 G, 2 1/2" C
A200V2	4#300KCMIL + 1#3 G, 2 1/2" C
A400	2 SETS OF 4#250KCMIL + 1#1 G, (2) 2 1/2" C
A600	2 SETS OF 4#500KCMIL + 1#2/0 G, (2) 3" C
A800	3 SETS OF 4#400KCMIL + 1#3/0 G, (3) 3" C
A1000	3 SETS OF 4#600KCMIL + 1#4/0 G, (3) 3 1/2" C
A1200	4 SETS OF 4#500KCMIL + 1#250KCMIL G, (4) 3" C
T15	15KVA TRANSFORMER, 480-208Y/120V, 3PH PRIMARY FEEDER: 3#10 + 1#10 G, 3/4" C SECONDARY FEEDER: 4#4 + 1#8 G, 1 1/4" C BONDING JUMPERS & GROUNDING ELECTRODE CONDUCTOR: #8
T75	75KVA TRANSFORMER, 480-208Y/120V, 3PH PRIMARY FEEDER: 3#1/0 + 1#6 G, 1 1/2" C SECONDARY FEEDER: 4#4/0 + 1#2 G, 2 1/2" C BONDING JUMPERS & GROUNDING ELECTRODE CONDUCTOR: #2
T112	112.5KVA TRANSFORMER, 480-208Y/120V, 3PH PRIMARY FEEDER: 3#3/0 + 1#6 G, 2" C SECONDARY FEEDER: 2 SETS OF 4#3/0 + 1#2 G, (2) 2" C BONDING JUMPERS & GROUNDING ELECTRODE CONDUCTOR: #2

INDIAN HEALTH SERVICE · IHS · 1955 · DEPARTMENT OF HEALTH & HUMAN SERVICES, USA

IHS Whiteriver Hospital

200 W Hospital Drive
Whiteriver, Arizona, 85941

IHS Project #: 131445
IHS Contract #: 75H70123R00008
IHS Award Date: 02/02/2024

BASED ON PROGRAM OF REQUIREMENTS DATED [**03/26/22**], POR AMENDMENT DATED [**02/03/25**], AND ON SCHEMATIC DRAWINGS APPROVED [**11/19/24**].

SMITHGROUP

455 NORTH THIRD STREET
SUITE 250
PHOENIX, AZ 85004
602.265.2200
smithgroup.com

ISSUED FOR	DATE
BID ADDENDUM-A	16APR26
FINAL CONSTRUCTION DOCUMENTS	05MAR26

SEALS AND SIGNATURES

Registered Professional Engineer's Seal — CERTIFICATE NO. 54673 — DANIEL L. PETERSON — Date Signed 04-16-26 — ARIZONA, U.S.A.
EXPIRES: 6-30-28

ELECTRICAL ONE LINE DIAGRAM - SES-E

Drawn By: Whittington Checked By: Baca
14904.000
PROJECT NUMBER

CD **E5.5.1**
SHEET NUMBER

Plot Date: 4/16/2026 9:38:17 AM Whittington

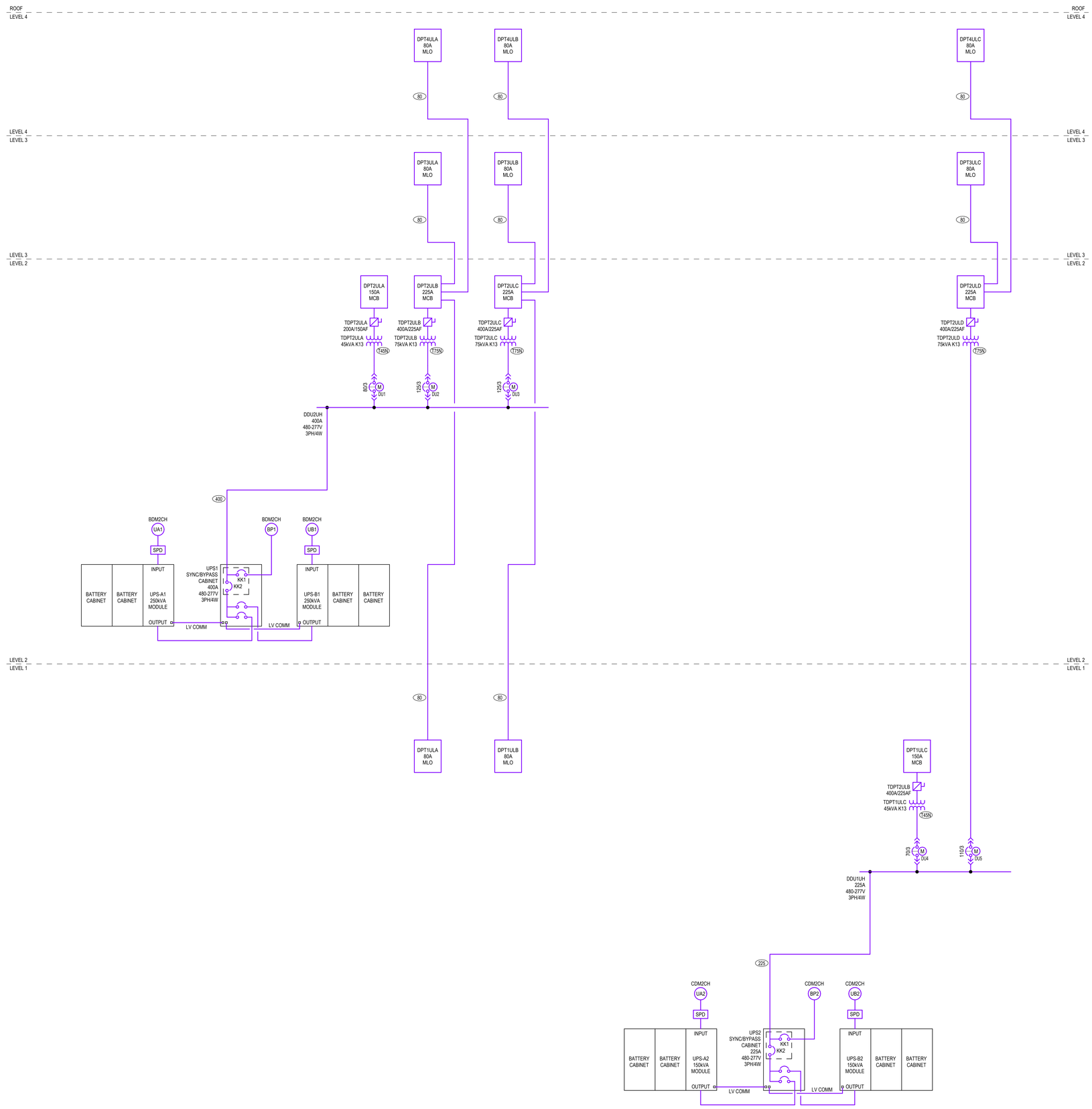

1 ONE LINE DIAGRAM - UPS
SCALE: NOT TO SCALE

GENERAL SHEET NOTES

A. **BASE BUILD** SCOPE SHALL ONLY INCLUDE EMPTY CONDUITS OF FEEDERS SHOWN ON THIS SHEET WITH FEEDER TAGS.
B. **ADD ALTERNATE SCOPE** SHALL INCLUDE PV PANELS, CARPORTS, DC CONDUCTORS, INVERTERS, AC CONDUCTORS, AC COMBINER BOXES, PV DISTRIBUTION BOARDS.
C. SEE DRAWING E0.1 FOR ABBREVIATIONS, SYMBOLS, GENERAL NOTES.
D. THE CONTRACTOR SHALL COORDINATE EXACT LOCATION OF EQUIPMENT POWER CONNECTIONS WITH EQUIPMENT INSTALLER PRIOR TO ROUGH-IN.
E. COORDINATE FINAL LOCATION OF MECHANICAL EQUIPMENT AND ASSOCIATED DISCONNECT SWITCHES, STARTERS, VFDS, CONTROL POWER AND OTHER POWER REQUIREMENTS WITH DIV 23 AND MECHANICAL DRAWINGS.
F. SEE MECHANICAL EQUIPMENT SCHEDULE FOR ASSOCIATED OVERCURRENT DEVICES, DISCONNECT SWITCHES, STARTERS AND WIRES.
G. VOLTAGE DROP SHALL BE LIMITED TO LESS THAN 3% FOR ALL BRANCH CIRCUITS AND 2% FOR ALL FEEDERS.
H. CONTRACTOR SHALL COORDINATE AND FIELD VERIFY REQUIREMENT OF NEUTRAL CONDUCTOR FOR ALL EQUIPMENT AND PROVIDE NEUTRAL CONDUCTOR AS NECESSARY.
I. ALL LIFE SAFETY AND LIGHTING PANELBOARDS SHALL BE EQUIPPED WITH TYPE 2 SPD.
J. ALL AUTOMATIC TRANSFER SWITCHES SHALL BE 4 POLE AND EQUIPPED WITH BYPASS ISOLATION.
K. ALL UTILITY TRANSFORMERS DESCRIBED AS NAVOPACHE TRANSFORMER TO BE COORDINATED WITH UTILITY AND PROVIDED BY UTILITY. COORDINATE ALL FINAL REQUIREMENTS AND AVAILABLE FAULT CURRENT CONTRIBUTIONS BASED ON SUPPLIED EQUIPMENT. BASIS OF DESIGN 2500KVA, AND 5%Z.
1 L. ELECTRICAL EQUIPMENT SHALL BE CONFIGURED AS FOLLOWS:
-SERVICE ENTRANCE SECTIONS - UL891 REAR CONNECTED SWITCHBOARD
-DISTRIBUTION SWITCHBOARDS WITH DRAWOUT CIRCUIT BREAKERS - UL891 REAR CONNECTED SWITCHBOARD
-GENERATOR PARALLELING GEAR - UL1558 SWITCHGEAR

SHEET KEYNOTES

FEEDER SCHEDULE

80	4#3 + 1#8 G, 1 1/4" C
225	4#4/0 + 1#4 G, 2 1/2" C
400	2 SETS OF 4#3/0 + 1#3 G, (2) 2" C
T45N	45KVA TRANSFORMER, 480-208Y/120V, 3PH PRIMARY FEEDER: 3#3 + 1#8 G, 1 1/4" C SECONDARY FEEDER: 3#1/0, 1#4/0 N + 1#6 G, 2" C BONDING JUMPERS & GROUNDING ELECTRODE CONDUCTOR: #6
T75N	75KVA TRANSFORMER, 480-208Y/120V, 3PH PRIMARY FEEDER: 3#1/0 + 1#6 G, 1 1/2" C SECONDARY FEEDER: 3#4/0, 1#500KCMIL N + 1#2 G, 2 1/2" C BONDING JUMPERS & GROUNDING ELECTRODE CONDUCTOR: #2

IHS Whiteriver Hospital

200 W Hospital Drive
Whiteriver, Arizona, 85941

IHS Project #: 131445
IHS Contract #: 75H70123R00008
IHS Award Date: 02/02/2024

BASED ON PROGRAM OF REQUIREMENTS DATED [**03/26/22**], POR AMENDMENT DATED [**02/03/25**], AND ON SCHEMATIC DRAWINGS APPROVED [**11/19/24**].

SMITHGROUP

455 NORTH THIRD STREET
SUITE 250
PHOENIX, AZ 85004
602.265.2200
smithgroup.com

ISSUED FOR	DATE
BID ADDENDUM-A	16APR26
FINAL CONSTRUCTION DOCUMENTS	05MAR26

SEALS AND SIGNATURES

Registered Professional Engineer (Electrical) CERTIFICATE NO. 54673 DANIEL L. PETERSON Date Signed 04-16-26 ARIZONA U.S.A.
EXPIRES: 6-30-28

ELECTRICAL ONE LINE DIAGRAM - UPS

Drawn By: Whittington Checked By: Baca
14904.000
PROJECT NUMBER

CD **E5.6**
SHEET NUMBER

Plot Date: 4/16/2026 9:58:23 AM Whittington

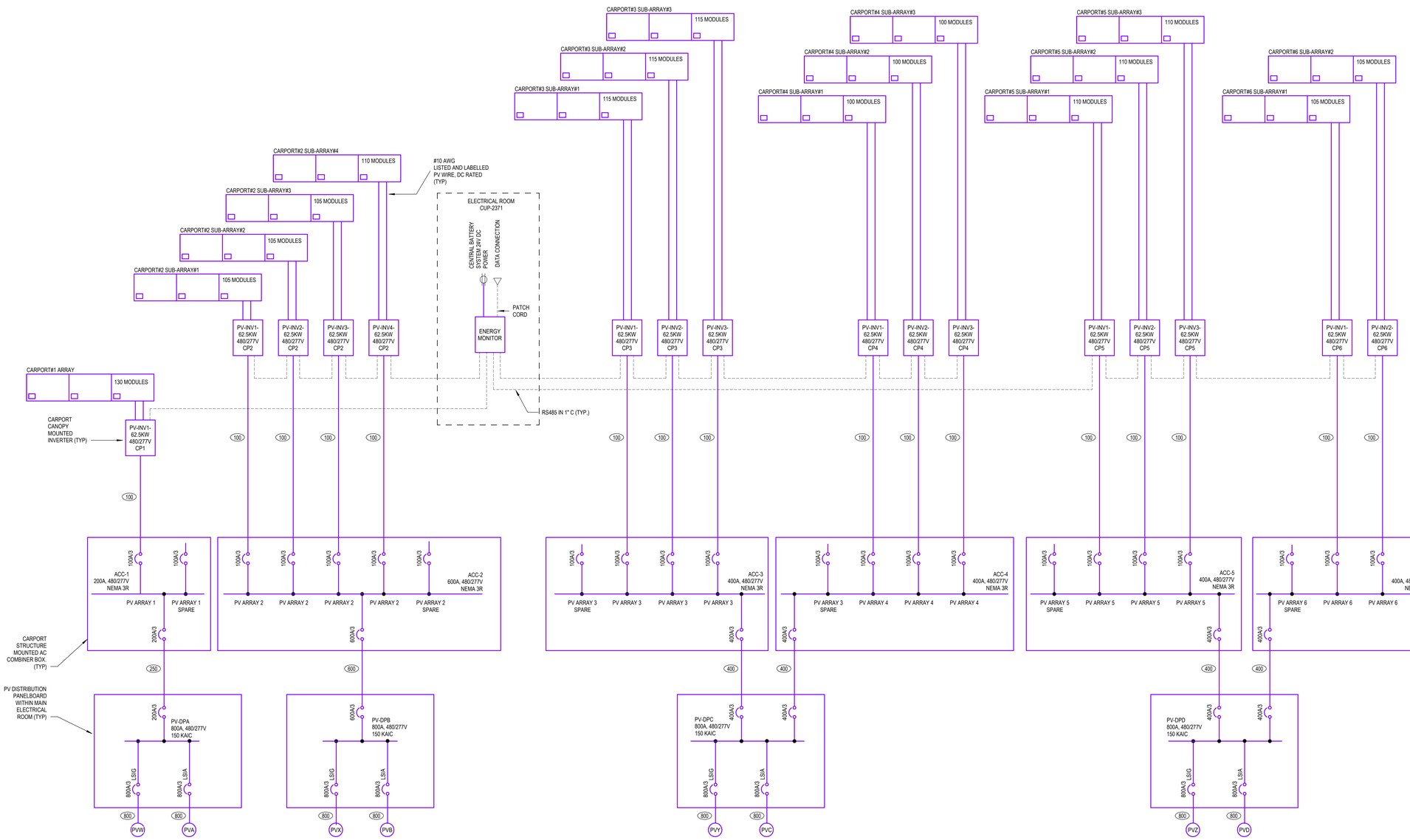

PV SYSTEM SUMMARY			
CARPORT#	QUANTITY OF MODULES	MODULE RATING (W)	ARRAY DC KW RATING
1	130	590	77
2	425	590	251
3	345	590	204
4	300	590	177
5	330	590	195
6	210	590	124
TOTAL DC NAMEPLATE RATING (MW)			1.03
TOTAL AC NAMEPLATE RATING (MW)			1.00
DC/AC RATIO			1.03

NOTES:
1. THE PHOTOVOLTAIC SYSTEM DESIGN IS IN ACCORDANCE WITH THE NEC. THE PV SYSTEM SHALL CONFORM TO THE REQUIREMENTS OF NEC SECTION 690. CONSULT WITH AHJ AND UTILITY CO. FOR ADDITIONAL REQUIREMENTS PRIOR TO INSTALLATION.
2. ACTUAL ROUTING OF ALL CONDUITS, LOCATION OF ALL EQUIPMENT AND COORDINATION WITH OTHER TRADES SHALL BE THE RESPONSIBILITY OF THE INSTALLING CONTRACTOR. ENSURE THE WORK OF OTHER TRADES DOES NOT SHADE THE PV ARRAY. PROVIDE PULL BOXES AND HANDHOLES AS REQUIRED BY THE NEC AND IN COORDINATION WITH SPECIFICATIONS.
3. OPEN WIRING CONNECTING THE INDIVIDUAL PV MODULES SHALL BE PERMITTED. TRANSITION TO CONDUIT WHEN CONDUCTORS ROUTE AWAY FROM THE ARRAY AND UPON ENTERING THE BUILDING. CONDUIT SHALL BE EMT OR RIGID METAL PER THE SPECIFICIATIONS. PVC CONDUIT SHALL NOT BE PERMITTED.
4. INCREASE WIRE SIZE TO COMPENSATE FOR POTENTIAL VOLTAGE DROP, ELEVATED AMBIENT TEMPERATURES, EXPOSURE TO SUNLIGHT AND CONDUCTOR BUNDLING WHERE REQUIRED.
5. PV SYSTEM CIRCUIT BREAKERS SHALL BE SUITABLE FOR BACK FED OPERATION. LOCATE BREAKER ON THE OPPOSITE END OF BUS BAR FROM THE MAIN BREAKER IN ACCORDANCE WITH NEC ARTICLE 705.12 FOR A LOAD SIDE INTERCONNECTION.
6. PROPERLY WATER TIGHT SEAL ALL PENETRATIONS. MINIMIZE THE QUANTITY OF PENETRATIONS, WHERE POSSIBLE.
7. PROVIDE SUITABLE CABLE MANAGEMENT FOR WIRING DIRECTLY BENEATH THE ARRAY. PLASTIC CABLE TIES ARE STRICTLY PROHIBITED. REFER TO SPECIFICATION FOR ADDITIONAL INFORMATION.

1 ONE LINE DIAGRAM - SOLAR
SCALE: NOT TO SCALE

GENERAL SHEET NOTES

A. **BASE BUILD** SCOPE SHALL ONLY INCLUDE EMPTY CONDUITS OF FEEDERS SHOWN ON THIS SHEET WITH FEEDER TAGS.
B. **ADD ALTERNATE SCOPE** SHALL INCLUDE PV PANELS, CARPORTS, DC CONDUCTORS, INVERTERS, AC CONDUCTORS, AC COMBINER BOXES, PV DISTRIBUTION BOARDS.
C. SEE DRAWING E0.1 FOR ABBREVIATIONS, SYMBOLS, GENERAL NOTES.
D. THE CONTRACTOR SHALL COORDINATE EXACT LOCATION OF EQUIPMENT POWER CONNECTIONS WITH EQUIPMENT INSTALLER PRIOR TO ROUGH-IN.
E. COORDINATE FINAL LOCATION OF MECHANICAL EQUIPMENT AND ASSOCIATED DISCONNECT SWITCHES, STARTERS, VFDS, CONTROL POWER AND OTHER POWER REQUIREMENTS WITH DIV 23 AND MECHANICAL DRAWINGS.
F. SEE MECHANICAL EQUIPMENT SCHEDULE FOR ASSOCIATED OVERCURRENT DEVICES, DISCONNECT SWITCHES, STARTERS AND WIRES.
G. VOLTAGE DROP SHALL BE LIMITED TO LESS THAN 3% FOR ALL BRANCH CIRCUITS AND 2% FOR ALL FEEDERS.
H. CONTRACTOR SHALL COORDINATE AND FIELD VERIFY REQUIREMENT OF NEUTRAL CONDUCTOR FOR ALL EQUIPMENT AND PROVIDE NEUTRAL CONDUCTOR AS NECESSARY.
I. ALL LIFE SAFETY AND LIGHTING PANELBOARDS SHALL BE EQUIPPED WITH TYPE 2 SPD.
J. ALL AUTOMATIC TRANSFER SWITCHES SHALL BE 4 POLE AND EQUIPPED WITH BYPASS ISOLATION.
K. ALL UTILITY TRANSFORMERS DESCRIBED AS NAVOPACHE TRANSFORMER TO BE COORDINATED WITH UTILITY AND PROVIDED BY UTILITY. COORDINATE ALL FINAL REQUIREMENTS AND AVAILABLE FAULT CURRENT CONTRIBUTIONS BASED ON SUPPLIED EQUIPMENT. BASIS OF DESIGN 2500KVA, AND 5%Z.
1 L. ELECTRICAL EQUIPMENT SHALL BE CONFIGURED AS FOLLOWS:
-SERVICE ENTRANCE SECTIONS - UL891 REAR CONNECTED SWITCHBOARD
-DISTRIBUTION SWITCHBOARDS WITH DRAWOUT CIRCUIT BREAKERS - UL891 REAR CONNECTED SWITCHBOARD
-GENERATOR PARALLELING GEAR - UL1558 SWITCHGEAR

SHEET KEYNOTES

FEEDER SCHEDULE

X

100	4#1 + 1#8 G, 1 1/2" C
250	4#250KCMIL + 1#4 G, 3"C
400	2 SETS OF 4#350 + 1#3 G, (2) 2" C
600	2 SETS OF 4#350KCMIL + 1#1 G, (2) 3" C
800	3 SETS OF 4#300KCMIL + 1#10 G, (3) 3" C

INDIAN HEALTH SERVICE
DEPARTMENT OF HEALTH & HUMAN SERVICES, USA
IHS · 1955 ·

IHS Whiteriver Hospital

200 W Hospital Drive
Whiteriver, Arizona, 85941

IHS Project #: 131445
IHS Contract #: 75H70123R00008
IHS Award Date: 02/02/2024

BASED ON PROGRAM OF REQUIREMENTS DATED [**03/26/22**], POR AMENDMENT DATED [**02/03/25**], AND ON SCHEMATIC DRAWINGS APPROVED [**11/19/24**].

SMITHGROUP

455 NORTH THIRD STREET
SUITE 250
PHOENIX, AZ 85004
602.265.2200
smithgroup.com

ISSUED FOR	DATE
BID ADDENDUM-A	16APR26
FINAL CONSTRUCTION DOCUMENTS	05MAR26

SEALS AND SIGNATURES

Registered Professional Engineer
CERTIFICATE NO.
54673
DANIEL L. PETERSON
Date Signed 04-16-26
ARIZONA U.S.A.
EXPIRES: 6-30-28

ELECTRICAL ONE LINE DIAGRAM - SOLAR

Drawn By: Whittington Checked By: Baca
14904.000
PROJECT NUMBER

CD **E5.8**
SHEET NUMBER

Plot Date: 4/16/2026 9:58:29 AM Whittington

Switchboard: ADM2CH

Location: MAIN ELECTRICAL ROOM... **Volts:** 480Y/277 **A.I.C. Rating:** REFER TO FAULT CALCS
Supply From: ATS-ACA **Phases:** 3 **Mains Type:** MLO
Mounting: Surface **Wires:** 4 **Mains Rating:** 1000 A
Enclosure: Type 1

CKT	Circuit Description	# of Poles	Frame Size	Trip Rating	Load	Remarks
1	APW2CHA	3	200 A	150 A	0 VA	
2	APW1CHA	3	200 A	150 A	0 VA	
3	APW2CHB	3	200 A	150 A	0 VA	
4	APW1CHB	3	200 A	150 A	0 VA	
5	APW2CHC	3	200 A	150 A	20784 VA	
6	APW1CHC	3	200 A	150 A	0 VA	
7	APW2CHD	3	250 A	225 A	35994 VA	
8	TAPW2CLA/B 75kVA	3	150 A	110 A	3820 VA	
9	TAPW1CLA/B 75kVA	3	150 A	110 A	36560 VA	
10	TAPW2CLC/D 75kVA	3	150 A	110 A	38895 VA	
11	TAPW1CLC/D 75kVA	3	150 A	110 A	65210 VA	
12	TAPW2CLE/F 75kVA	3	150 A	110 A	2680 VA	
13	TAPW1CLE/F 75kVA	3	150 A	110 A	37476 VA	
14	BUSSED SPACE	1	--	--	--	
				Total Conn. Load:	241419 VA	
				Total Amps:	290 A	

Load Classification	Connected Load	Demand Factor	Estimated Demand	Panel Totals	
Equipment	1000 VA	100.00%	1000 VA		
Lighting	38682 VA	125.00%	48353 VA	**Total Conn. Load:**	241419 VA
Power	106823 VA	100.00%	106823 VA	**Total Est. Demand:**	221934 VA
Receptacle	74130 VA	56.74%	42065 VA	**Total Conn.:**	290 A
Mechanical Equipment Motor	20784 VA	114.00%	23694 VA	**Total Est. Demand:**	267 A

Notes:

Switchboard: ADM2EHA

Location: MAIN ELECTRICAL ROOM... **Volts:** 480Y/277 **A.I.C. Rating:** REFER TO FAULT CALCS
Supply From: ATS-AEA **Phases:** 3 **Mains Type:** MLO
Mounting: Surface **Wires:** 4 **Mains Rating:** 1600 A
Enclosure: Type 1

CKT	Circuit Description	# of Poles	Frame Size	Trip Rating	Load	Remarks
1	ACCH-1 AIR COOLED CHILLER	3	1000 A	1000 A	556438 VA	
2	CHWP-1 50HP PUMP	3	100 A	100 A	54040 VA	
3	HHWP-1 15HP PUMP	3	30 A	30 A	17451 VA	
4	CBWP-1 50HP PUMP	3	100 A	100 A	54040 VA	
5	EWH-1	3	400 A	300 A	180000 VA	
6	B-1	3	1000 A	1000 A	543806 VA	
7	BUSSED SPACE	1	--	--	--	
8	BUSSED SPACE	1	--	--	--	
9	BUSSED SPACE	1	--	--	--	
10	BUSSED SPACE	1	--	--	--	
11	BUSSED SPACE	1	--	--	--	
12	BUSSED SPACE	1	--	--	--	
13	BUSSED SPACE	1	--	--	--	
14	BUSSED SPACE	1	--	--	--	
				Total Conn. Load:	1405775 VA	
				Total Amps:	1691 A	

Load Classification	Connected Load	Demand Factor	Estimated Demand	Panel Totals	
Power	723806 VA	100.00%	723806 VA		
Mechanical Equipment Motor	125531 VA	110.76%	139041 VA	**Total Conn. Load:**	1405775 VA
Non-Coincident Load	556438 VA	0.01%	56 VA	**Total Est. Demand:**	862903 VA
				Total Conn.:	1691 A
				Total Est. Demand:	1038 A

Notes:
ACCH-1 AND B-1 ARE NON-COINCIDENT LOADS.
PROVIDE SHUNT-TRIP CIRCUIT BREAKER FOR BOILER B-1 (A)

Switchboard: ADM2EHB

Location: MAIN ELECTRICAL ROOM... **Volts:** 480Y/277 **A.I.C. Rating:** REFER TO FAULT CALCS
Supply From: ATS-AEB **Phases:** 3 **Mains Type:** MLO
Mounting: Surface **Wires:** 4 **Mains Rating:** 600 A
Enclosure: Type 1

CKT	Circuit Description	# of Poles	Frame Size	Trip Rating	Load	Remarks
1	APW2EHA	3	400 A	400 A	200185 VA	
2	APW2EHB	3	400 A	400 A	119141 VA	
3	BUSSED SPACE	1	--	--	--	
4	BUSSED SPACE	1	--	--	--	
5	BUSSED SPACE	1	--	--	--	
6	BUSSED SPACE	1	--	--	--	
7	BUSSED SPACE	1	--	--	--	
8	BUSSED SPACE	1	--	--	--	
9	BUSSED SPACE	1	--	--	--	
10	BUSSED SPACE	1	--	--	--	
11	BUSSED SPACE	1	--	--	--	
12	BUSSED SPACE	1	--	--	--	
13	BUSSED SPACE	1	--	--	--	
14	BUSSED SPACE	1	--	--	--	
				Total Conn. Load:	317428 VA	
				Total Amps:	382 A	

Load Classification	Connected Load	Demand Factor	Estimated Demand	Panel Totals	
Motor	1980 VA	125.00%	2475 VA		
Power	45544 VA	100.00%	45544 VA	**Total Conn. Load:**	317428 VA
Receptacle	17640 VA	78.34%	13820 VA	**Total Est. Demand:**	326233 VA
Mechanical Equipment Motor	252658 VA	104.82%	264846 VA	**Total Conn.:**	382 A
				Total Est. Demand:	392 A

Notes:

Switchboard: ADM2SH

Location: MAIN NORMAL ELECTICAL... **Volts:** 480Y/277 **A.I.C. Rating:** REFER TO FAULT CALCS
Supply From: ATS-ASA **Phases:** 3 **Mains Type:** MLO
Mounting: Surface **Wires:** 4 **Mains Rating:** 1000 A
Enclosure: Type 1

CKT	Circuit Description	# of Poles	Frame Size	Trip Rating	Load	Remarks
1	APW2SHA	3	300 A	300 A	160086 VA	
2	APW2SHB	3	300 A	300 A	165574 VA	
3	APW2SHC	3	300 A	300 A	71286 VA	
4	APW2SHD	3	225 A	225 A	64769 VA	
5	TAPW1SLH/J 112.5kVA	3	200 A	175 A	104480 VA	
6	APA2SHA	3	200 A	200 A	33552 VA	
7	BUSSED SPACE	1	--	--	--	
8	BUSSED SPACE	1	--	--	--	
9	BUSSED SPACE	1	--	--	--	
10	BUSSED SPACE	1	--	--	--	
11	BUSSED SPACE	1	--	--	--	
12	BUSSED SPACE	1	--	--	--	
13	BUSSED SPACE	1	--	--	--	
14	BUSSED SPACE	1	--	--	--	
				Total Conn. Load:	599236 VA	
				Total Amps:	721 A	

Load Classification	Connected Load	Demand Factor	Estimated Demand	Panel Totals	
Lighting	66905 VA	125.00%	83632 VA		
Power	244597 VA	100.00%	244597 VA	**Total Conn. Load:**	599236 VA
Receptacle	255330 VA	51.96%	132665 VA	**Total Est. Demand:**	496157 VA
Mechanical Equipment Motor	39906 VA	108.33%	43232 VA	**Total Conn.:**	721 A
				Total Est. Demand:	597 A

Notes:

Panelboard: APW2CHA

Location: ELECTRICAL ELC-2034 **Volts:** 480Y/277 **A.I.C. Rating:** REFER TO FAULT CALCS
Supply From: ADM2CH **Phases:** 3 **Mains Type:** MLO
Mounting: Surface **Wires:** 4 **Mains Rating:** 150 A
Enclosure: Type 1

CKT	Circuit Description	Trip	Poles	A (VA)		B (VA)		C (VA)		Poles	Trip	Circuit Description	CKT
1	BUSSED SPACE	--	1	--	--					1	--	BUSSED SPACE	2
3	BUSSED SPACE	--	1			--	--			1	--	BUSSED SPACE	4
5	BUSSED SPACE	--	1					--	--	1	--	BUSSED SPACE	6
7	BUSSED SPACE	--	1	--	--					1	--	BUSSED SPACE	8
9	BUSSED SPACE	--	1			--	--			1	--	BUSSED SPACE	10
11	BUSSED SPACE	--	1					--	--	1	--	BUSSED SPACE	12
13	BUSSED SPACE	--	1	--	--					1	--	BUSSED SPACE	14
15	BUSSED SPACE	--	1			--	--			1	--	BUSSED SPACE	16
17	BUSSED SPACE	--	1					--	--	1	--	BUSSED SPACE	18
19	BUSSED SPACE	--	1	--	--					1	--	BUSSED SPACE	20
21	BUSSED SPACE	--	1			--	--			1	--	BUSSED SPACE	22
23	BUSSED SPACE	--	1					--	--	1	--	BUSSED SPACE	24
25	BUSSED SPACE	--	1	--	--					1	--	BUSSED SPACE	26
27	BUSSED SPACE	--	1			--	--			1	--	BUSSED SPACE	28
29	BUSSED SPACE	--	1					--	--	1	--	BUSSED SPACE	30
31	BUSSED SPACE	--	1	--	--					1	--	BUSSED SPACE	32
33	BUSSED SPACE	--	1			--	0			1	20 A	SPARE	34
35	BUSSED SPACE	--	1					--	0	1	20 A	SPARE	36
37	BUSSED SPACE	--	1	--	0					1	20 A	SPARE	38
39	BUSSED SPACE	--	1			--	0			1	20 A	SPARE	40
41	BUSSED SPACE	--	1					--	0	1	20 A	SPARE	42
				Total Load:	0 VA		0 VA		0 VA				
				Total Amps:	0 A		0 A		0 A				

Load Classification	Connected Load	Demand Factor	Estimated Demand	Panel Totals	
				Total Conn. Load:	0 VA
				Total Est. Demand:	0 VA
				Total Conn.:	0 A
				Total Est. Demand:	0 A

Notes:

Panelboard: APW2CHB

Location: ELECTRICAL ELC-2056 **Volts:** 480Y/277 **A.I.C. Rating:** REFER TO FAULT CALCS
Supply From: ADM2CH **Phases:** 3 **Mains Type:** MLO
Mounting: Surface **Wires:** 4 **Mains Rating:** 150 A
Enclosure: Type 1

CKT	Circuit Description	Trip	Poles	A (VA)		B (VA)		C (VA)		Poles	Trip	Circuit Description	CKT
1	BUSSED SPACE	--	1	--	--					1	--	BUSSED SPACE	2
3	BUSSED SPACE	--	1			--	--			1	--	BUSSED SPACE	4
5	BUSSED SPACE	--	1					--	--	1	--	BUSSED SPACE	6
7	BUSSED SPACE	--	1	--	--					1	--	BUSSED SPACE	8
9	BUSSED SPACE	--	1			--	--			1	--	BUSSED SPACE	10
11	BUSSED SPACE	--	1					--	--	1	--	BUSSED SPACE	12
13	BUSSED SPACE	--	1	--	--					1	--	BUSSED SPACE	14
15	BUSSED SPACE	--	1			--	--			1	--	BUSSED SPACE	16
17	BUSSED SPACE	--	1					--	--	1	--	BUSSED SPACE	18
19	BUSSED SPACE	--	1	--	--					1	--	BUSSED SPACE	20
21	BUSSED SPACE	--	1			--	--			1	--	BUSSED SPACE	22
23	BUSSED SPACE	--	1					--	--	1	--	BUSSED SPACE	24
25	BUSSED SPACE	--	1	--	--					1	--	BUSSED SPACE	26
27	BUSSED SPACE	--	1			--	--			1	--	BUSSED SPACE	28
29	BUSSED SPACE	--	1					--	--	1	--	BUSSED SPACE	30
31	BUSSED SPACE	--	1	--	--					1	--	BUSSED SPACE	32
33	BUSSED SPACE	--	1			--	0			1	20 A	SPARE	34
35	BUSSED SPACE	--	1					--	0	1	20 A	SPARE	36
37	BUSSED SPACE	--	1	--	0					1	20 A	SPARE	38
39	BUSSED SPACE	--	1			--	0			1	20 A	SPARE	40
41	BUSSED SPACE	--	1					--	0	1	20 A	SPARE	42
				Total Load:	0 VA		0 VA		0 VA				
				Total Amps:	0 A		0 A		0 A				

Load Classification	Connected Load	Demand Factor	Estimated Demand	Panel Totals	
				Total Conn. Load:	0 VA
				Total Est. Demand:	0 VA
				Total Conn.:	0 A
				Total Est. Demand:	0 A

Notes:

GENERAL SHEET NOTES

A. SEE DRAWING SERIES E5 FOR POWER RISER DIAGRAM.
B. PROVIDE PERMANENT PANEL NAMEPLATES AND TYPED PANEL SCHEDULES AFTER ALL WORK IS COMPLETE. SCHEDULES AND NAMEPLATES MUST MATCH PANEL INFORMATION, CIRCUIT BREAKERS, AND CONNECTED LOADS, IN COMPLIANCE WITH NEC 408.4
C. CONTRACTOR TO PROVIDE 3 PHASE CIRCUIT FOR ALL NEW SURGE PROTECTION DEVICES. COORDINATE FINAL CIRCUIT BREAKER SIZE WITH DEVICE.
D. CONTRACTOR TO PROVIDE 3P, 15A BREAKER AS REQUIRED FOR ALL NEW METERS.
E. ALL ELECTRICAL EQUIPMENT CIRCUIT SPACES SHALL BE BUSSED.

DEPARTMENT OF HEALTH & HUMAN SERVICES · USA · INDIAN HEALTH SERVICE · IHS · 1955

IHS Whiteriver Hospital

200 W Hospital Drive
Whiteriver, Arizona, 85941

IHS Project #: 131445
IHS Contract #: 75H70123R00008
IHS Award Date: 02/02/2024

BASED ON PROGRAM OF REQUIREMENTS DATED [**03/26/22**], POR AMENDMENT DATED [**02/03/25**], AND ON SCHEMATIC DRAWINGS APPROVED [**11/19/24**].

SMITHGROUP

455 NORTH THIRD STREET
SUITE 250
PHOENIX, AZ 85004
602.265.2200
smithgroup.com

ISSUED FOR	DATE
BID ADDENDUM-A	16APR26
FINAL CONSTRUCTION DOCUMENTS	23JAN26

SEALS AND SIGNATURES

Registered Professional Engineer | CERTIFICATE NO. 54673 | DANIEL L. PETERSON | Date Signed 04-16-26 | ARIZONA, U.S.A.

EXPIRES: 6-30-28

ADM2CH	ADM2EHA
ADM2EHB	ADM2SH
APW2CHA	APW2CHB

DISTRIBUTION AND PANEL BOARD SCHEDULES, SES-A LEVEL 2

Drawn By: Whittington Checked By: Baca

14904.000
PROJECT NUMBER

CD **E8.2.A1**
SHEET NUMBER

Plot Date: 4/16/2026 9:58:29 AM Whittington

Switchboard: BDM2CH

Location: MAIN ELECTRICAL ROOM... **Volts:** 480Y/277 **A.I.C. Rating:** REFER TO FAULT CALCS
Supply From: ATS-BCA **Phases:** 3 **Mains Type:** MLO
Mounting: Surface **Wires:** 4 **Mains Rating:** 1000 A
Enclosure: Type 1

CKT	Circuit Description	# of Poles	Frame Size	Trip Rating	Load	Remarks
1	BPE2CHA	3	200 A	150 A	0 VA	
2	BPE1CHA	3	200 A	150 A	0 VA	
3	BPE2CHB	3	200 A	150 A	0 VA	
4	BPE1CHB	3	200 A	150 A	0 VA	
5	BPE2CHD	3	225 A	225 A	6278 VA	
6	TBPE2CLA/B	3	150 A	110 A	8200 VA	
7	TBPE1CLA/B	3	150 A	110 A	0 VA	
8	TBPE2CLC/D	3	150 A	110 A	4780 VA	
9	TBPE1CLC/D	3	150 A	110 A	6180 VA	
10	TBPE2CLE/F	3	150 A	110 A	0 VA	
11	UPS1	3	400 A	350 A	183300 VA	
12	BUSSED SPACE	1	--	--	--	
13	BUSSED SPACE	1	--	--	--	
14	BUSSED SPACE	1	--	--	--	

Total Conn. Load: 208738 VA
Total Amps: 251 A

Load Classification	Connected Load	Demand Factor	Estimated Demand	Panel Totals	
Equipment	500 VA	100.00%	500 VA		
Lighting	6278 VA	125.00%	7848 VA	**Total Conn. Load:**	208738 VA
Power	193380 VA	100.00%	193380 VA	**Total Est. Demand:**	210308 VA
Receptacle	8580 VA	100.00%	8580 VA	**Total Conn.:**	251 A
				Total Est. Demand:	253 A

Notes:

Switchboard: BDM2EHA

Location: MAIN ELECTRICAL ROOM... **Volts:** 480Y/277 **A.I.C. Rating:** REFER TO FAULT CALCS
Supply From: ATS-BEB **Phases:** 3 **Mains Type:** MLO
Mounting: Surface **Wires:** 4 **Mains Rating:** 1600 A
Enclosure: Type 1

CKT	Circuit Description	# of Poles	Frame Size	Trip Rating	Load	Remarks
1	ACCH-2 AIR COOLED CHILLER	3	1000 A	1000 A	556438 VA	
2	CHWP-2 50HP PUMP	3	100 A	100 A	54040 VA	
3	HHWP-2 15HP PUMP	3	30 A	30 A	17451 VA	
4	CBWP-2 50HP PUMP	3	100 A	100 A	54040 VA	
5	EWH-2	3	400 A	300 A	180000 VA	
6	B-2	3	1000 A	1000 A	543806 VA	
7	BUSSED SPACE	1	--	--	--	
8	BUSSED SPACE	1	--	--	--	
9	BUSSED SPACE	1	--	--	--	
10	BUSSED SPACE	1	--	--	--	
11	BUSSED SPACE	1	--	--	--	
12	BUSSED SPACE	1	--	--	--	
13	BUSSED SPACE	1	--	--	--	
14	BUSSED SPACE	1	--	--	--	

Total Conn. Load: 1405775 VA
Total Amps: 1691 A

Load Classification	Connected Load	Demand Factor	Estimated Demand	Panel Totals	
Power	723806 VA	100.00%	723806 VA		
Mechanical Equipment Motor	125531 VA	110.76%	139041 VA	**Total Conn. Load:**	1405775 VA
Non-Coincident Load	556438 VA	0.01%	56 VA	**Total Est. Demand:**	862903 VA
				Total Conn.:	1691 A
				Total Est. Demand:	1038 A

Notes:
ACCH-2 AND B-2 ARE NON-COINCIDENT LOADS
PROVIDE SHUNT-TRIP CIRCUIT BREAKER FOR BOILER B-2 (A)

Switchboard: BDM2EHB

Location: MAIN ELECTRICAL ROOM... **Volts:** 480Y/277 **A.I.C. Rating:** REFER TO FAULT CALCS
Supply From: ATS-BEC **Phases:** 3 **Mains Type:** MLO
Mounting: Surface **Wires:** 4 **Mains Rating:** 600 A
Enclosure: Type 1

CKT	Circuit Description	# of Poles	Frame Size	Trip Rating	Load	Remarks
1	BPE2EHA	3	400 A	400 A	57081 VA	
2	BPE2EHB	3	400 A	400 A	96071 VA	
3	BUSSED SPACE	1	--	--	--	
4	BUSSED SPACE	1	--	--	--	
5	BUSSED SPACE	1	--	--	--	
6	BUSSED SPACE	1	--	--	--	
7	BUSSED SPACE	1	--	--	--	
8	BUSSED SPACE	1	--	--	--	
9	BUSSED SPACE	1	--	--	--	
10	BUSSED SPACE	1	--	--	--	
11	BUSSED SPACE	1	--	--	--	
12	BUSSED SPACE	1	--	--	--	
13	BUSSED SPACE	1	--	--	--	
14	BUSSED SPACE	1	--	--	--	

Total Conn. Load: 153152 VA
Total Amps: 184 A

Load Classification	Connected Load	Demand Factor	Estimated Demand	Panel Totals	
Power	25700 VA	100.00%	25700 VA		
Receptacle	1620 VA	100.00%	1620 VA	**Total Conn. Load:**	153152 VA
Mechanical Equipment Motor	125832 VA	104.13%	131026 VA	**Total Est. Demand:**	158346 VA
				Total Conn.:	184 A
				Total Est. Demand:	190 A

Notes:

Switchboard: BDM2SH

Location: MAIN NORMAL ELECTICAL... **Volts:** 480Y/277 **A.I.C. Rating:** REFER TO FAULT CALCS
Supply From: ATS-BSA **Phases:** 3 **Mains Type:** MLO
Mounting: Surface **Wires:** 4 **Mains Rating:** 1000 A
Enclosure: Type 1

CKT	Circuit Description	# of Poles	Frame Size	Trip Rating	Load	Remarks
1	BPF2SHA	3	400 A	250 A	142814 VA	
2	BPE2SHA	3	400 A	300 A	133450 VA	
3	BPE2SHB	3	400 A	300 A	165963 VA	
4	BPE2SHD	3	225 A	225 A	44207 VA	
5	TBPT2SLA	3	100 A	70 A	39040 VA	
6	TBPT2SLB	3	150 A	110 A	71620 VA	
7	TBPT2SLC	3	150 A	110 A	72160 VA	
8	BUSSED SPACE	1	--	--	--	
9	BUSSED SPACE	1	--	--	--	
10	BUSSED SPACE	1	--	--	--	
11	BUSSED SPACE	1	--	--	--	
12	BUSSED SPACE	1	--	--	--	
13	BUSSED SPACE	1	--	--	--	
14	BUSSED SPACE	1	--	--	--	

Total Conn. Load: 668790 VA
Total Amps: 804 A

Load Classification	Connected Load	Demand Factor	Estimated Demand	Panel Totals	
Lighting	46152 VA	125.00%	57690 VA		
Motor	12635 VA	109.59%	13846 VA	**Total Conn. Load:**	668790 VA
Power	303500 VA	100.00%	303500 VA	**Total Est. Demand:**	620931 VA
Receptacle	169950 VA	52.94%	89975 VA	**Total Conn.:**	804 A
Mechanical Equipment Motor	139775 VA	114.00%	159346 VA	**Total Est. Demand:**	747 A

Notes:

Panelboard: BPE2CHA

Location: ELECTRICAL ELC-2046 **Volts:** 480Y/277 **A.I.C. Rating:** REFER TO FAULT CALCS
Supply From: BDM2CH **Phases:** 3 **Mains Type:** MLO
Mounting: Surface **Wires:** 4 **Mains Rating:** 150 A
Enclosure: Type 1

CKT	Circuit Description	Trip	Poles	A (VA)		B (VA)		C (VA)		Poles	Trip	Circuit Description	CKT
1	BUSSED SPACE	--	1	--	--					1	--	BUSSED SPACE	2
3	BUSSED SPACE	--	1			--	--			1	--	BUSSED SPACE	4
5	BUSSED SPACE	--	1					--	--	1	--	BUSSED SPACE	6
7	BUSSED SPACE	--	1	--	--					1	--	BUSSED SPACE	8
9	BUSSED SPACE	--	1			--	--			1	--	BUSSED SPACE	10
11	BUSSED SPACE	--	1					--	--	1	--	BUSSED SPACE	12
13	BUSSED SPACE	--	1	--	--					1	--	BUSSED SPACE	14
15	BUSSED SPACE	--	1			--	--			1	--	BUSSED SPACE	16
17	BUSSED SPACE	--	1					--	--	1	--	BUSSED SPACE	18
19	BUSSED SPACE	--	1	--	--					1	--	BUSSED SPACE	20
21	BUSSED SPACE	--	1			--	--			1	--	BUSSED SPACE	22
23	BUSSED SPACE	--	1					--	--	1	--	BUSSED SPACE	24
25	BUSSED SPACE	--	1	--	--					1	--	BUSSED SPACE	26
27	BUSSED SPACE	--	1			--	--			1	--	BUSSED SPACE	28
29	BUSSED SPACE	--	1					--	--	1	--	BUSSED SPACE	30
31	BUSSED SPACE	--	1	--	--					1	--	BUSSED SPACE	32
33	BUSSED SPACE	--	1			--	0			1	20 A	SPARE	34
35	BUSSED SPACE	--	1					--	0	1	20 A	SPARE	36
37	BUSSED SPACE	--	1	--	0					1	20 A	SPARE	38
39	BUSSED SPACE	--	1			--	0			1	20 A	SPARE	40
41	BUSSED SPACE	--	1					--	0	1	20 A	SPARE	42
			Total Load:	0 VA		0 VA		0 VA					
			Total Amps:	0 A		0 A		0 A					

Load Classification	Connected Load	Demand Factor	Estimated Demand	Panel Totals	
				Total Conn. Load:	0 VA
				Total Est. Demand:	0 VA
				Total Conn.:	0 A
				Total Est. Demand:	0 A

Notes:

Panelboard: BPE2CHB

Location: ELECTRICAL ELC-2007 **Volts:** 480Y/277 **A.I.C. Rating:** REFER TO FAULT CALCS
Supply From: BDM2CH **Phases:** 3 **Mains Type:** MLO
Mounting: Surface **Wires:** 4 **Mains Rating:** 150 A
Enclosure: Type 1

CKT	Circuit Description	Trip	Poles	A (VA)		B (VA)		C (VA)		Poles	Trip	Circuit Description	CKT
1	BUSSED SPACE	--	1	--	--					1	--	BUSSED SPACE	2
3	BUSSED SPACE	--	1			--	--			1	--	BUSSED SPACE	4
5	BUSSED SPACE	--	1					--	--	1	--	BUSSED SPACE	6
7	BUSSED SPACE	--	1	--	--					1	--	BUSSED SPACE	8
9	BUSSED SPACE	--	1			--	--			1	--	BUSSED SPACE	10
11	BUSSED SPACE	--	1					--	--	1	--	BUSSED SPACE	12
13	BUSSED SPACE	--	1	--	--					1	--	BUSSED SPACE	14
15	BUSSED SPACE	--	1			--	--			1	--	BUSSED SPACE	16
17	BUSSED SPACE	--	1					--	--	1	--	BUSSED SPACE	18
19	BUSSED SPACE	--	1	--	--					1	--	BUSSED SPACE	20
21	BUSSED SPACE	--	1			--	--			1	--	BUSSED SPACE	22
23	BUSSED SPACE	--	1					--	--	1	--	BUSSED SPACE	24
25	BUSSED SPACE	--	1	--	--					1	--	BUSSED SPACE	26
27	BUSSED SPACE	--	1			--	--			1	--	BUSSED SPACE	28
29	BUSSED SPACE	--	1					--	--	1	--	BUSSED SPACE	30
31	BUSSED SPACE	--	1	--	--					1	--	BUSSED SPACE	32
33	BUSSED SPACE	--	1			--	0			1	20 A	SPARE	34
35	BUSSED SPACE	--	1					--	0	1	20 A	SPARE	36
37	BUSSED SPACE	--	1	--	0					1	20 A	SPARE	38
39	BUSSED SPACE	--	1			--	0			1	20 A	SPARE	40
41	BUSSED SPACE	--	1					--	0	1	20 A	SPARE	42
			Total Load:	0 VA		0 VA		0 VA					
			Total Amps:	0 A		0 A		0 A					

Load Classification	Connected Load	Demand Factor	Estimated Demand	Panel Totals	
				Total Conn. Load:	0 VA
				Total Est. Demand:	0 VA
				Total Conn.:	0 A
				Total Est. Demand:	0 A

Notes:

GENERAL SHEET NOTES

A. SEE DRAWING SERIES E5 FOR POWER RISER DIAGRAM.
B. PROVIDE PERMANENT PANEL NAMEPLATES AND TYPED PANEL SCHEDULES AFTER ALL WORK IS COMPLETE. SCHEDULES AND NAMEPLATES MUST MATCH PANEL INFORMATION, CIRCUIT BREAKERS, AND CONNECTED LOADS, IN COMPLIANCE WITH NEC 408.4
C. CONTRACTOR TO PROVIDE 3 PHASE CIRCUIT FOR ALL NEW SURGE PROTECTION DEVICES. COORDINATE FINAL CIRCUIT BREAKER SIZE WITH DEVICE.
D. CONTRACTOR TO PROVIDE 3P, 15A BREAKER AS REQUIRED FOR ALL NEW METERS.
E. ALL ELECTRICAL EQUIPMENT CIRCUIT SPACES SHALL BE BUSSED.

IHS Whiteriver Hospital

200 W Hospital Drive
Whiteriver, Arizona, 85941

IHS Project #: 131445
IHS Contract #: 75H70123R00008
IHS Award Date: 02/02/2024

BASED ON PROGRAM OF REQUIREMENTS DATED [**03/26/22**], POR AMENDMENT DATED [**02/03/25**], AND ON SCHEMATIC DRAWINGS APPROVED [**11/19/24**].

SMITHGROUP

455 NORTH THIRD STREET
SUITE 250
PHOENIX, AZ 85004
602.265.2200
smithgroup.com

ISSUED FOR	DATE
BID ADDENDUM-A	16APR26
FINAL CONSTRUCTION DOCUMENTS	23JAN26

SEALS AND SIGNATURES

Registered Professional Engineer | CERTIFICATE NO. 54673 | DANIEL L. PETERSON | Date Signed 04-16-26 | ARIZONA, U.S.A.
EXPIRES: 6-30-28

BDM2CH	BDM2EHA
BDM2EHB	BDM2SH
BPE2CHA	BPE2CHB

DISTRIBUTION AND PANEL BOARD SCHEDULES, SES-B LEVEL 2

Drawn By: Whittington Checked By: Baca
14904.000
PROJECT NUMBER

CD **E8.2.B1**
SHEET NUMBER

Plot Date: 4/16/2026 9:58:30 AM Whittington

Switchboard: CDM2CH

Location: MAIN ELECTRICAL ROOM... **Volts:** 480Y/277 **A.I.C. Rating:** REFER TO FAULT CALCS
Supply From: ATS-CCA **Phases:** 3 **Mains Type:** MLO
Mounting: Surface **Wires:** 4 **Mains Rating:** 1000 A
Enclosure: Type 1

CKT	Circuit Description	# of Poles	Frame Size	Trip Rating	Load	Remarks
1	CPW3CHA	3	200 A	150 A	0 VA	
2	CPW4CHA	3	200 A	150 A	0 VA	
3	CPW3CHB	3	200 A	150 A	0 VA	
4	CPW4CHB	3	200 A	150 A	0 VA	
5	TCPW3CLA/B	3	150 A	110 A	1020 VA	
6	TCPW4CLA/B	3	150 A	110 A	480 VA	
7	TCPW3CLC/D	3	150 A	110 A	180 VA	
8	TCPW4CLC/D	3	150 A	110 A	180 VA	
9	TCPW3CLE/F	3	150 A	110 A	51430 VA	
10	TCPW4CLE/F	3	150 A	110 A	2432 VA	
11	CPW3CHD	3	225 A	225 A	24488 VA	
12	CPW3CHC	3	200 A	150 A	0 VA	
13	CPW4CHC	3	200 A	150 A	0 VA	
14	UPS2	3	225 A	225 A	85440 VA	
15	FESS-1	3	225 A	225 A	34200 VA	
16	BUSSED SPACE	1	--	--	--	
				Total Conn. Load:	199850 VA	
				Total Amps:	240 A	

Load Classification	Connected Load	Demand Factor	Estimated Demand	Panel Totals	
Lighting	21800 VA	125.00%	27250 VA		
Motor	2000 VA	106.25%	2125 VA	**Total Conn. Load:**	199850 VA
Power	131450 VA	100.00%	131450 VA	**Total Est. Demand:**	192835 VA
Receptacle	37680 VA	63.27%	23840 VA	**Total Conn.:**	240 A
Mechanical Equipment Motor	6920 VA	118.06%	8170 VA	**Total Est. Demand:**	232 A

Notes:

Switchboard: CDM2EHB

Location: MAIN ELECTRICAL ROOM... **Volts:** 480Y/277 **A.I.C. Rating:** REFER TO FAULT CALCS
Supply From: ATS-CEB **Phases:** 3 **Mains Type:** MLO
Mounting: Surface **Wires:** 4 **Mains Rating:** 600 A
Enclosure: Type 1

CKT	Circuit Description	# of Poles	Frame Size	Trip Rating	Load	Remarks
1	CPW3EHA	3	400 A	400 A	170576 VA	
2	CPW3EHB	3	400 A	400 A	101867 VA	
3	TCPW1EHC	3	225 A	225 A	229000 VA	
4	TCPW1EHD	3	225 A	225 A	315000 VA	
5	BUSSED SPACE	1	--	--	--	
6	BUSSED SPACE	1	--	--	--	
7	BUSSED SPACE	1	--	--	--	
8	BUSSED SPACE	1	--	--	--	
9	BUSSED SPACE	1	--	--	--	
10	BUSSED SPACE	1	--	--	--	
11	BUSSED SPACE	1	--	--	--	
12	BUSSED SPACE	1	--	--	--	
13	BUSSED SPACE	1	--	--	--	
14	BUSSED SPACE	1	--	--	--	
				Total Conn. Load:	779293 VA	
				Total Amps:	937 A	

Load Classification	Connected Load	Demand Factor	Estimated Demand	Panel Totals	
Power	108260 VA	100.00%	108260 VA		
Receptacle	3240 VA	100.00%	3240 VA	**Total Conn. Load:**	779293 VA
Imaging NEC 517.73	544000 VA	22.93%	124750 VA	**Total Est. Demand:**	382548 VA
Mechanical Equipment Motor	160944 VA	101.81%	163854 VA	**Total Conn.:**	937 A
				Total Est. Demand:	460 A

Notes:

Switchboard: CDSUR1

Location: UPS UPS-2029 **Volts:** 480Y/277 **A.I.C. Rating:** REFER TO FAULT CALCS
Supply From: FESS-1 **Phases:** 3 **Mains Type:** MLO
Mounting: Surface **Wires:** 4 **Mains Rating:** 400 A
Enclosure: Type 1

CKT	Circuit Description	# of Poles	Frame Size	Trip Rating	Load	Remarks
1	IPP2A	2	50 A	50 A	6760 VA	
2	IPP2C	2	50 A	50 A	5760 VA	
3	IPP1E	2	80 A	80 A	9000 VA	
4	IPP1B	2	50 A	50 A	6340 VA	
5	IPP3B	2	50 A	50 A	6340 VA	
6	BUSSED SPACE	1	--	--	--	
7	BUSSED SPACE	1	--	--	--	
8	BUSSED SPACE	1	--	--	--	
9	BUSSED SPACE	1	--	--	--	
10	BUSSED SPACE	1	--	--	--	
11	BUSSED SPACE	1	--	--	--	
12	BUSSED SPACE	1	--	--	--	
13	BUSSED SPACE	1	--	--	--	
14	BUSSED SPACE	1	--	--	--	
				Total Conn. Load:	34200 VA	
				Total Amps:	41 A	

Load Classification	Connected Load	Demand Factor	Estimated Demand	Panel Totals	
Lighting	1800 VA	125.00%	2250 VA		
Motor	2000 VA	106.25%	2125 VA	**Total Conn. Load:**	34200 VA
Power	28960 VA	100.00%	28960 VA	**Total Est. Demand:**	34775 VA
Receptacle	1440 VA	100.00%	1440 VA	**Total Conn.:**	41 A
				Total Est. Demand:	42 A

Notes:

Switchboard: CDM2EHA

Location: MAIN ELECTRICAL ROOM... **Volts:** 480Y/277 **A.I.C. Rating:** REFER TO FAULT CALCS
Supply From: ATS-CEA **Phases:** 3 **Mains Type:** MLO
Mounting: Surface **Wires:** 4 **Mains Rating:** 1600 A
Enclosure: Type 1

CKT	Circuit Description	# of Poles	Frame Size	Trip Rating	Load	Remarks
1	ACCH-3 AIR COOLED CHILLER	3	1000 A	1000 A	556438 VA	
2	CHWP-3 50HP PUMP	3	100 A	100 A	54040 VA	
3	HHWP-3 15HP PUMP	3	30 A	30 A	17451 VA	
4	CBWP-3 50HP PUMP	3	100 A	100 A	54040 VA	
5	EWH-3	3	400 A	300 A	180000 VA	
6	B-3	3	1000 A	1000 A	543806 VA	
7	BUSSED SPACE	1	--	--	--	
8	BUSSED SPACE	1	--	--	--	
9	BUSSED SPACE	1	--	--	--	
10	BUSSED SPACE	1	--	--	--	
11	BUSSED SPACE	1	--	--	--	
12	BUSSED SPACE	1	--	--	--	
13	BUSSED SPACE	1	--	--	--	
14	BUSSED SPACE	1	--	--	--	
				Total Conn. Load:	1405775 VA	
				Total Amps:	1691 A	

Load Classification	Connected Load	Demand Factor	Estimated Demand	Panel Totals	
Power	723806 VA	100.00%	723806 VA		
Mechanical Equipment Motor	125531 VA	110.76%	139041 VA	**Total Conn. Load:**	1405775 VA
Non-Coincident Load	556438 VA	0.01%	56 VA	**Total Est. Demand:**	862903 VA
				Total Conn.:	1691 A
				Total Est. Demand:	1038 A

Notes:
ACCH-3 AND B-3 ARE NON-COINCIDENT LOADS
PROVIDE SHUNT-TRIP CIRCUIT BREAKER FOR BOILER B-3 (A)

Switchboard: CDM2SH

Location: MAIN NORMAL ELECTICAL... **Volts:** 480Y/277 **A.I.C. Rating:** REFER TO FAULT CALCS
Supply From: ATS-CSA **Phases:** 3 **Mains Type:** MLO
Mounting: Surface **Wires:** 4 **Mains Rating:** 1000 A
Enclosure: Type 1

CKT	Circuit Description	# of Poles	Frame Size	Trip Rating	Load	Remarks
1	CPW3SHA	3	400 A	300 A	97748 VA	
2	CPW3SHD	3	225 A	225 A	27786 VA	
3	CPW3SHB	3	400 A	300 A	85746 VA	
4	CPW3SHC	3	400 A	300 A	168230 VA	
5	TCPT1SLA	3	100 A	70 A	32040 VA	
6	TCPT2SLA	3	150 A	110 A	54120 VA	
7	CP2SHA	3	150 A	125 A	24974 VA	
8	CPF2SHA	3	225 A	225 A	72384 VA	
9	BUSSED SPACE	1	--	--	--	
10	BUSSED SPACE	1	--	--	--	
11	BUSSED SPACE	1	--	--	--	
12	BUSSED SPACE	1	--	--	--	
13	BUSSED SPACE	1	--	--	--	
14	BUSSED SPACE	1	--	--	--	
				Total Conn. Load:	563028 VA	
				Total Amps:	677 A	

Load Classification	Connected Load	Demand Factor	Estimated Demand	Panel Totals	
Lighting	29508 VA	125.00%	36886 VA		
Power	290638 VA	100.00%	290638 VA	**Total Conn. Load:**	563028 VA
Receptacle	219630 VA	52.28%	114815 VA	**Total Est. Demand:**	468497 VA
Mechanical Equipment Motor	23252 VA	112.50%	26159 VA	**Total Conn.:**	677 A
				Total Est. Demand:	564 A

Notes:

Panelboard: CPT2SLA

Location: IDF IDF-2013 **Volts:** 208Y/120 **A.I.C. Rating:** REFER TO FAULT CALCS
Supply From: TCPT2SLA **Phases:** 3 **Mains Type:** MCB
Mounting: Surface **Wires:** 4 **Mains Rating:** 225 A
Enclosure: Type 1

CKT	Circuit Description	Trip	Poles	A (VA)	B (VA)	C (VA)	Poles	Trip	Circuit Description	CKT
1	RCPT IDF-2013 - R-1	30 A	2	1750 540			1	20 A	RCPT IDF-2013	2
3					1750 --		1	--	BUSSED SPACE	4
5	RCPT IDF-2013 - R-2	30 A	2			1750 --	1	--	BUSSED SPACE	6
7				1750 --			1	--	BUSSED SPACE	8
9	RCPT IDF-2013 - R-3	30 A	2		1750 --		1	--	BUSSED SPACE	10
11						1750 --	1	--	BUSSED SPACE	12
13	RCPT IDF-2013 - R-4	30 A	2	1750 --			1	--	BUSSED SPACE	14
15					1750 --		1	--	BUSSED SPACE	16
17	RCPT IDF-2013 - R-5	30 A	2			1750 --	1	--	BUSSED SPACE	18
19				1750 --			1	--	BUSSED SPACE	20
21	BUSSED SPACE	--	1		-- 0		1	20 A	SPARE	22
23	BUSSED SPACE	--	1			-- 0	1	20 A	SPARE	24
25	BUSSED SPACE	--	1	-- 0			1	20 A	SPARE	26
27	BUSSED SPACE	--	1		-- 0		1	20 A	SPARE	28
29	BUSSED SPACE	--	1			-- 0	1	20 A	SPARE	30
31	BUSSED SPACE	--	1	-- 7540			3	80 A	CPT3SLA	32
33	BUSSED SPACE	--	1		-- 5250					34
35	BUSSED SPACE	--	1			-- 5250				36
37	BUSSED SPACE	--	1	-- 7540			3	80 A	CPT4SLA	38
39	BUSSED SPACE	--	1		-- 5250					40
41	BUSSED SPACE	--	1			-- 5250				42
		Total Load:		22620 VA	15750 VA	15750 VA				
		Total Amps:		189 A	131 A	131 A				

Load Classification	Connected Load	Demand Factor	Estimated Demand	Panel Totals	
Receptacle	1620 VA	100.00%	1620 VA		
Power	52500 VA	100.00%	52500 VA	**Total Conn. Load:**	54120 VA
				Total Est. Demand:	54120 VA
				Total Conn.:	150 A
				Total Est. Demand:	150 A

Notes:

GENERAL SHEET NOTES

A. SEE DRAWING SERIES E5 FOR POWER RISER DIAGRAM.
B. PROVIDE PERMANENT PANEL NAMEPLATES AND TYPED PANEL SCHEDULES AFTER ALL WORK IS COMPLETE. SCHEDULES AND NAMEPLATES MUST MATCH PANEL INFORMATION, CIRCUIT BREAKERS, AND CONNECTED LOADS, IN COMPLIANCE WITH NEC 408.4
C. CONTRACTOR TO PROVIDE 3 PHASE CIRCUIT FOR ALL NEW SURGE PROTECTION DEVICES. COORDINATE FINAL CIRCUIT BREAKER SIZE WITH DEVICE.
D. CONTRACTOR TO PROVIDE 3P, 15A BREAKER AS REQUIRED FOR ALL NEW METERS.
E. ALL ELECTRICAL EQUIPMENT CIRCUIT SPACES SHALL BE BUSSED.

DEPARTMENT OF HEALTH & HUMAN SERVICES, USA — INDIAN HEALTH SERVICE — IHS · 1955 ·

IHS Whiteriver Hospital

200 W Hospital Drive
Whiteriver, Arizona, 85941

IHS Project #: 131445
IHS Contract #: 75H70123R00008
IHS Award Date: 02/02/2024

BASED ON PROGRAM OF REQUIREMENTS DATED [**03/26/22**], POR AMENDMENT DATED [**02/03/25**], AND ON SCHEMATIC DRAWINGS APPROVED [**11/19/24**].

SMITHGROUP

455 NORTH THIRD STREET
SUITE 250
PHOENIX, AZ 85004
602.265.2200
smithgroup.com

ISSUED FOR	DATE
BID ADDENDUM-A	16APR26
FINAL CONSTRUCTION DOCUMENTS	05MAR26

SEALS AND SIGNATURES

Registered Professional Engineer (Electrical) CERTIFICATE NO. 54673 DANIEL L. PETERSON Date Signed 04-16-26 ARIZONA, U.S.A.

EXPIRES: 6-30-28

CDM2CH	CDM2EHA
CDM2EHB	CDM2SH
CDSUR1	CPT2SLA

DISTRIBUTION AND PANEL BOARD SCHEDULES, SES-C LEVEL 2

Drawn By: Whittington Checked By: Baca

PROJECT NUMBER 14904.000

SHEET NUMBER **CD E8.2.C1**

Plot Date: 4/16/2026 9:58:32 AM Whittington

Switchboard: DDM2CH

Location: MAIN ELECTRICAL ROOM... **Volts:** 480Y/277 **A.I.C. Rating:** REFER TO FAULT CALCS
Supply From: ATS-DCA **Phases:** 3 **Mains Type:** MLO
Mounting: Surface **Wires:** 4 **Mains Rating:** 1000 A
Enclosure: Type 1

CKT	Circuit Description	# of Poles	Frame Size	Trip Rating	Load	Remarks
1	DPE3CHA	3	200 A	150 A	0 VA	
2	DPE4CHA	3	200 A	150 A	0 VA	
3	DPE3CHB	3	200 A	150 A	0 VA	
4	DPE4CHB	3	200 A	150 A	29098 VA	
5	DPE3CHC	3	225 A	225 A	29081 VA	
6	TDPE3CLA/B	3	150 A	110 A	13260 VA	
7	TDPE4CLA/B	3	150 A	110 A	10025 VA	
8	TDPE3CLC/D	3	150 A	110 A	7380 VA	
9	TDPE4CLC/D	3	150 A	110 A	65440 VA	
10	FESS-2	3	225 A	225 A	31380 VA	
11	BUSSED SPACE	1	--	--	--	
12	BUSSED SPACE	1	--	--	--	
13	BUSSED SPACE	1	--	--	--	
14	BUSSED SPACE	1	--	--	--	

Total Conn. Load: 185664 VA
Total Amps: 223 A

Load Classification	Connected Load	Demand Factor	Estimated Demand	Panel Totals	
Lighting	30881 VA	125.00%	38602 VA		
Motor	1000 VA	112.50%	1125 VA	**Total Conn. Load:**	185664 VA
Power	111005 VA	100.00%	111005 VA	**Total Est. Demand:**	196034 VA
Receptacle	13680 VA	86.55%	11840 VA	**Total Conn.:**	223 A
Mechanical Equipment Motor	29098 VA	115.00%	33463 VA	**Total Est. Demand:**	236 A

Notes:

Switchboard: DDM2EHA

Location: MAIN ELECTRICAL ROOM... **Volts:** 480Y/277 **A.I.C. Rating:** REFER TO FAULT CALCS
Supply From: ATS-DEA **Phases:** 3 **Mains Type:** MLO
Mounting: Surface **Wires:** 4 **Mains Rating:** 1200 A
Enclosure: Type 1

CKT	Circuit Description	# of Poles	Frame Size	Trip Rating	Load	Remarks
1	ASHP-1 (1) CHILLER HEAT PUMP MODULE 1	3	250 A	250 A	143597 VA	
2	ASHP-1 (2) CHILLER HEAT PUMP MODULE 2	3	250 A	250 A	143597 VA	
3	ASHP-1 (3) CHILLER HEAT PUMP MODULE 3	3	250 A	250 A	143597 VA	
4	CHWP-4 25HP PUMP	3	50 A	50 A	28254 VA	
5	HHWP-4 15HP PUMP	3	30 A	30 A	17451 VA	
6	EWH-4	3	400 A	300 A	180000 VA	
7	B-4	3	800 A	800 A	383589 VA	
8	BUSSED SPACE	1	--	--	--	
9	BUSSED SPACE	1	--	--	--	
10	BUSSED SPACE	1	--	--	--	
11	BUSSED SPACE	1	--	--	--	
12	BUSSED SPACE	1	--	--	--	
13	BUSSED SPACE	1	--	--	--	
14	BUSSED SPACE	1	--	--	--	

Total Conn. Load: 1040084 VA
Total Amps: 1251 A

Load Classification	Connected Load	Demand Factor	Estimated Demand	Panel Totals	
Power	180000 VA	100.00%	180000 VA		
Mechanical Equipment Motor	429294 VA	122.34%	525191 VA	**Total Conn. Load:**	1040084 VA
Non-Coincident Load	430790 VA	0.01%	43 VA	**Total Est. Demand:**	705234 VA
				Total Conn.:	1251 A
				Total Est. Demand:	848 A

Notes:
ASHP-1 AND B-4 ARE NON-COINCIDENT LOADS
PROVIDE SHUNT-TRIP CIRCUIT BREAKER FOR BOILER B-4 (A)

Switchboard: DDM2EHB

Location: MAIN ELECTRICAL ROOM... **Volts:** 480Y/277 **A.I.C. Rating:** REFER TO FAULT CALCS
Supply From: ATS-DEC **Phases:** 3 **Mains Type:** MLO
Mounting: Surface **Wires:** 4 **Mains Rating:** 600 A
Enclosure: Type 1

CKT	Circuit Description	# of Poles	Frame Size	Trip Rating	Load	Remarks
1	DPE3EHA	3	400 A	400 A	21744 VA	
2	DPE3EHB	3	400 A	400 A	109453 VA	
3	DPA2EHA	3	225 A	225 A	150487 VA	
4	BUSSED SPACE	1	--	--	--	
5	BUSSED SPACE	1	--	--	--	
6	BUSSED SPACE	1	--	--	--	
7	BUSSED SPACE	1	--	--	--	
8	BUSSED SPACE	1	--	--	--	
9	BUSSED SPACE	1	--	--	--	
10	BUSSED SPACE	1	--	--	--	
11	BUSSED SPACE	1	--	--	--	
12	BUSSED SPACE	1	--	--	--	
13	BUSSED SPACE	1	--	--	--	
14	BUSSED SPACE	1	--	--	--	

Total Conn. Load: 281605 VA
Total Amps: 339 A

Load Classification	Connected Load	Demand Factor	Estimated Demand	Panel Totals	
Motor	11880 VA	104.17%	12375 VA		
Power	85300 VA	100.00%	85300 VA	**Total Conn. Load:**	281605 VA
Receptacle	2700 VA	100.00%	2700 VA	**Total Est. Demand:**	295659 VA
Mechanical Equipment Motor	184011 VA	107.42%	197666 VA	**Total Conn.:**	339 A
				Total Est. Demand:	356 A

Notes:

Switchboard: DDM2SH

Location: MAIN NORMAL ELECTICAL... **Volts:** 480Y/277 **A.I.C. Rating:** REFER TO FAULT CALCS
Supply From: ATS-DSA **Phases:** 3 **Mains Type:** MLO
Mounting: Surface **Wires:** 4 **Mains Rating:** 1000 A
Enclosure: Type 1

CKT	Circuit Description	# of Poles	Frame Size	Trip Rating	Load	Remarks
1	DPE3SHA	3	400 A	300 A	207315 VA	
2	DPE3SHB	3	400 A	300 A	165320 VA	
3	DPE3SHC	3	225 A	225 A	19223 VA	
4	BUSSED SPACE	1	--	--	--	
5	BUSSED SPACE	1	--	--	--	
6	BUSSED SPACE	1	--	--	--	
7	BUSSED SPACE	1	--	--	--	
8	BUSSED SPACE	1	--	--	--	
9	BUSSED SPACE	1	--	--	--	
10	BUSSED SPACE	1	--	--	--	
11	BUSSED SPACE	1	--	--	--	
12	BUSSED SPACE	1	--	--	--	
13	BUSSED SPACE	1	--	--	--	
14	BUSSED SPACE	1	--	--	--	

Total Conn. Load: 391858 VA
Total Amps: 471 A

Load Classification	Connected Load	Demand Factor	Estimated Demand	Panel Totals	
Lighting	19223 VA	125.00%	24028 VA		
Power	123595 VA	100.00%	123595 VA	**Total Conn. Load:**	391858 VA
Receptacle	249040 VA	52.01%	129520 VA	**Total Est. Demand:**	277143 VA
				Total Conn.:	471 A
				Total Est. Demand:	333 A

Notes:

Switchboard: DDSUR2

Location: UPS UPS-2029 **Volts:** 480Y/277 **A.I.C. Rating:** REFER TO FAULT CALCS
Supply From: FESS-2 **Phases:** 3 **Mains Type:** MLO
Mounting: Surface **Wires:** 4 **Mains Rating:** 400 A
Enclosure: Type 1

CKT	Circuit Description	# of Poles	Frame Size	Trip Rating	Load	Remarks
1	IPP1A	2	50 A	50 A	6760 VA	
2	IPP1C	2	50 A	50 A	5760 VA	
3	IPP2B	2	50 A	50 A	6340 VA	
4	IPP3A	2	50 A	50 A	6760 VA	
5	IPP3C	2	50 A	50 A	5760 VA	
6	BUSSED SPACE	1	--	--	--	
7	BUSSED SPACE	1	--	--	--	
8	BUSSED SPACE	1	--	--	--	
9	BUSSED SPACE	1	--	--	--	
10	BUSSED SPACE	1	--	--	--	
11	BUSSED SPACE	1	--	--	--	
12	BUSSED SPACE	1	--	--	--	
13	BUSSED SPACE	1	--	--	--	
14	BUSSED SPACE	1	--	--	--	

Total Conn. Load: 31380 VA
Total Amps: 38 A

Load Classification	Connected Load	Demand Factor	Estimated Demand	Panel Totals	
Lighting	1800 VA	125.00%	2250 VA		
Motor	1000 VA	112.50%	1125 VA	**Total Conn. Load:**	31380 VA
Power	27320 VA	100.00%	27320 VA	**Total Est. Demand:**	31955 VA
Receptacle	1260 VA	100.00%	1260 VA	**Total Conn.:**	38 A
				Total Est. Demand:	38 A

Notes:

Panelboard: DDU2UH

Location: UPS UPS-2076 **Volts:** 480Y/277 **A.I.C. Rating:** REFER TO FAULT CALCS
Supply From: UPS1 **Phases:** 3 **Mains Type:** MLO
Mounting: Surface **Wires:** 4 **Mains Rating:** 400 A
Enclosure: Type 1

CKT	Circuit Description	Trip	Poles	A (VA)		B (VA)		C (VA)		Poles	Trip	Circuit Description	CKT
1				14000	--					1	--	BUSSED SPACE	2
3	TDPT2ULA	70 A	3			14000	--			1	--	BUSSED SPACE	4
5								10860	--	1	--	BUSSED SPACE	6
7				24550	--					1	--	BUSSED SPACE	8
9	TDPT2ULB	110 A	3			24500	--			1	--	BUSSED SPACE	10
11								23830	--	1	--	BUSSED SPACE	12
13				23590	--					1	--	BUSSED SPACE	14
15	TDPT2ULC	110 A	3			24500	--			1	--	BUSSED SPACE	16
17								23470	--	1	--	BUSSED SPACE	18
19	BUSSED SPACE	--	1	--	--					1	--	BUSSED SPACE	20
21	BUSSED SPACE	--	1			--	--			1	--	BUSSED SPACE	22
23	BUSSED SPACE	--	1					--	0	1	20 A	SPARE	24
25	BUSSED SPACE	--	1	--	0					1	20 A	SPARE	26
27	BUSSED SPACE	--	1			--	0			1	20 A	SPARE	28
29	BUSSED SPACE	--	1					--	0	1	20 A	SPARE	30
		Total Load:		62140 VA		63000 VA		58160 VA					
		Total Amps:		227 A		230 A		210 A					

Load Classification	Connected Load	Demand Factor	Estimated Demand	Panel Totals	
Receptacle	720 VA	100.00%	720 VA		
Power	182580 VA	100.00%	182580 VA	**Total Conn. Load:**	183300 VA
				Total Est. Demand:	183300 VA
				Total Conn.:	220 A
				Total Est. Demand:	220 A

Notes:

GENERAL SHEET NOTES

A. SEE DRAWING SERIES E5 FOR POWER RISER DIAGRAM.
B. PROVIDE PERMANENT PANEL NAMEPLATES AND TYPED PANEL SCHEDULES AFTER ALL WORK IS COMPLETE. SCHEDULES AND NAMEPLATES MUST MATCH PANEL INFORMATION, CIRCUIT BREAKERS, AND CONNECTED LOADS, IN COMPLIANCE WITH NEC 408.4
C. CONTRACTOR TO PROVIDE 3 PHASE CIRCUIT FOR ALL NEW SURGE PROTECTION DEVICES. COORDINATE FINAL CIRCUIT BREAKER SIZE WITH DEVICE.
D. CONTRACTOR TO PROVIDE 3P, 15A BREAKER AS REQUIRED FOR ALL NEW METERS.
E. ALL ELECTRICAL EQUIPMENT CIRCUIT SPACES SHALL BE BUSSED.

DEPARTMENT OF HEALTH & HUMAN SERVICES, USA
INDIAN HEALTH SERVICE · IHS · 1955

IHS Whiteriver Hospital

200 W Hospital Drive
Whiteriver, Arizona, 85941

IHS Project #: 131445
IHS Contract #: 75H70123R00008
IHS Award Date: 02/02/2024

BASED ON PROGRAM OF REQUIREMENTS DATED [**03/26/22**], POR AMENDMENT DATED [**02/03/25**], AND ON SCHEMATIC DRAWINGS APPROVED [**11/19/24**].

SMITHGROUP

455 NORTH THIRD STREET
SUITE 250
PHOENIX, AZ 85004
602.265.2200
smithgroup.com

ISSUED FOR	DATE
BID ADDENDUM-A	16APR26
FINAL CONSTRUCTION DOCUMENTS	23JAN26

SEALS AND SIGNATURES

Registered Professional Engineer
CERTIFICATE NO.
54673
DANIEL L. PETERSON
Date Signed 04-16-26
STATE OF ARIZONA, U.S.A.

EXPIRES: 6-30-28

DDM2CH	DDM2EHA
DDM2EHB	DDM2SH
DDSUR2	DDU2UH

DISTRIBUTION AND PANEL BOARD SCHEDULES, SES-D LEVEL 2

Drawn By: Whittington Checked By: Baca
14904.000
PROJECT NUMBER

CD **E8.2.D1**
SHEET NUMBER

Plot Date: 4/16/2026 9:58:33 AM Whittington

Switchboard: EDM2EHA

Location: MAIN ELECTRICAL ROOM... **Volts:** 480Y/277 **A.I.C. Rating:** REFER TO FAULT CALCS
Supply From: ATS-EEB **Phases:** 3 **Mains Type:** MLO
Mounting: Surface **Wires:** 4 **Mains Rating:** 1000 A
Enclosure: Type 1

CKT	Circuit Description	# of Poles	Frame Size	Trip Rating	Load	Remarks
1	EPW2EHA	3	400 A	400 A	238913 VA	
2	EKPH1A	3	600 A	600 A	366479 VA	
3	LS-PH	3	400 A	20 A	79960 VA	
4	TEPW2ELA	3	200 A	175 A	77762 VA	
5	BUSSED SPACE	1	--	--	--	
6	BUSSED SPACE	1	--	--	--	
7	BUSSED SPACE	1	--	--	--	
8	BUSSED SPACE	1	--	--	--	
9	BUSSED SPACE	1	--	--	--	
10	BUSSED SPACE	1	--	--	--	
11	BUSSED SPACE	1	--	--	--	
12	BUSSED SPACE	1	--	--	--	
13	BUSSED SPACE	1	--	--	--	
14	BUSSED SPACE	1	--	--	--	
				Total Conn. Load:	726632 VA	
				Total Amps:	874 A	

Load Classification	Connected Load	Demand Factor	Estimated Demand	Panel Totals	
Lighting	50 VA	125.00%	63 VA		
Motor	79776 VA	125.00%	99720 VA	**Total Conn. Load:**	726632 VA
Power	315110 VA	100.00%	315110 VA	**Total Est. Demand:**	625582 VA
Receptacle	1440 VA	100.00%	1440 VA	**Total Conn.:**	874 A
Kitchen Equipment	366479 VA	65.00%	238211 VA	**Total Est. Demand:**	752 A

Notes:

Switchboard: EDM2EHB

Location: MAIN ELECTRICAL ROOM... **Volts:** 480Y/277 **A.I.C. Rating:** REFER TO FAULT CALCS
Supply From: ATS-EED **Phases:** 3 **Mains Type:** MLO
Mounting: Surface **Wires:** 4 **Mains Rating:** 1200 A
Enclosure: Type 1

CKT	Circuit Description	# of Poles	Frame Size	Trip Rating	Load	Remarks
1	ASHP-2 (1) CHILLER HEAT PUMP MODULE 1	3	250 A	250 A	143597 VA	
2	ASHP-2 (2) CHILLER HEAT PUMP MODULE 2	3	250 A	250 A	143597 VA	
3	ASHP-2 (3) CHILLER HEAT PUMP MODULE 3	3	250 A	250 A	143597 VA	
4	CHWP-5 25HP PUMP	3	50 A	50 A	28254 VA	
5	HHWP-5 15HP PUMP	3	30 A	30 A	17451 VA	
6	EWH-5	3	400 A	300 A	180000 VA	
7	EP2EHA	3	250 A	250 A	45544 VA	
8	B-5	3	800 A	800 A	383589 VA	
9	SMWP-1 15 HP PUMP	3	30 A	30 A	17451 VA	
10	BUSSED SPACE	1	--	--	--	
11	BUSSED SPACE	1	--	--	--	
12	BUSSED SPACE	1	--	--	--	
13	BUSSED SPACE	1	--	--	--	
14	BUSSED SPACE	1	--	--	--	
				Total Conn. Load:	1103079 VA	
				Total Amps:	1327 A	

Load Classification	Connected Load	Demand Factor	Estimated Demand	Panel Totals	
Power	180100 VA	100.00%	180100 VA		
Mechanical Equipment Motor	492189 VA	119.48%	588086 VA	**Total Conn. Load:**	1103079 VA
Non-Coincident Load	430790 VA	0.01%	43 VA	**Total Est. Demand:**	768229 VA
				Total Conn.:	1327 A
				Total Est. Demand:	924 A

Notes:
ASHP-2 AND B-5 ARE NON-COINCIDENT LOADS
PROVIDE SHUNT-TRIP CIRCUIT BREAKER FOR BOILER B-5 (A)

Panelboard: EP2EHA

Location: CUP ELECTRICAL CUP-2373 **Volts:** 480Y/277 **A.I.C. Rating:** REFER TO FAULT CALCS
Supply From: EDM2EHB **Phases:** 3 **Mains Type:** MLO
Mounting: Surface **Wires:** 4 **Bus Rating:** 250 A
Enclosure: Type 1

CKT	Circuit Description	Trip	Poles	A (VA)		B (VA)		C (VA)		Poles	Trip	Circuit Description	CKT
1				3324	776								2
3	BP-1 BOOSTER PUMP	20 A	3			3324	776			3	20 A	CU-2075A	4
5								3324	776				6
7				1330	--					1	--	BUSSED SPACE	8
9	BCU-2374	20 A	3			1330	--			1	--	BUSSED SPACE	10
11								1330	--	1	--	BUSSED SPACE	12
13				1330	--					1	--	BUSSED SPACE	14
15	BCU-2371	20 A	3			1330	--			1	--	BUSSED SPACE	16
17								1330	--	1	--	BUSSED SPACE	18
19				1330	--					1	--	BUSSED SPACE	20
21	BCU-2368	20 A	3			1330	--			1	--	BUSSED SPACE	22
23								1330	--	1	--	BUSSED SPACE	24
25				776	--					1	--	BUSSED SPACE	26
27	CU-1179	20 A	3			776	0			1	20 A	SPARE	28
29								776	0	1	20 A	SPARE	30
31				776	0					1	20 A	SPARE	32
33	CU-1337	20 A	3			776	0			1	20 A	SPARE	34
35								776	0	1	20 A	SPARE	36
37				776	5476								38
39	CU-2075B	20 A	3			776	4988			3	110 A	TEP2ELA	40
41								776	3824				42
				Total Load:		15895 VA		15407 VA		14243 VA			
				Total Amps:		58 A		56 A		51 A			

Load Classification	Connected Load	Demand Factor	Estimated Demand	Panel Totals	
Power	100 VA	100.00%	100 VA		
Mechanical Equipment Motor	45444 VA	105.49%	47937 VA	**Total Conn. Load:**	45544 VA
				Total Est. Demand:	48037 VA
				Total Conn.:	55 A
				Total Est. Demand:	58 A

Notes:

Panelboard: EP2ELA

Location: CUP ELECTRICAL CUP-2373 **Volts:** 208Y/120 **A.I.C. Rating:** REFER TO FAULT CALCS
Supply From: TEP2ELA **Phases:** 3 **Mains Type:** MCB
Mounting: Surface **Wires:** 4 **Mains Rating:** 225 A
Enclosure: Type 1

CKT	Circuit Description	Trip	Poles	A (VA)		B (VA)		C (VA)		Poles	Trip	Circuit Description	CKT
1	CP-1	20 A	2	693	--					1	--	BUSSED SPACE	2
3						693	--			1	--	BUSSED SPACE	4
5	CP-2	20 A	2					693	--	1	--	BUSSED SPACE	6
7				693	--					1	--	BUSSED SPACE	8
9	WT-1	20 A	1			500	--			1	--	BUSSED SPACE	10
11	WT-2	20 A	1					500	--	1	--	BUSSED SPACE	12
13	FCU-2370	20 A	1	696	--					1	--	BUSSED SPACE	14
15	FCU-2373	20 A	1			696	--			1	--	BUSSED SPACE	16
17	MV-1	20 A	1					1200	--	1	--	BUSSED SPACE	18
19	NSC-1	20 A	1	500	--					1	--	BUSSED SPACE	20
21	CU-2350	20 A	2			1331	--			1	--	BUSSED SPACE	22
23								1331	--	1	--	BUSSED SPACE	24
25	SLIDING GATE	30 A	2	1768	--					1	--	BUSSED SPACE	26
27						1768	--			1	--	BUSSED SPACE	28
29	WATER METERS	20 A	1					100	--	1	--	BUSSED SPACE	30
31	GF-1	20 A	1	1127	--					1	--	BUSSED SPACE	32
33	BOILER SHUNT TRIP CIRCUIT	20 A	1			0	0			1	20 A	SPARE	34
35	BUSSED SPACE	--	1					--	0	1	20 A	SPARE	36
37	BUSSED SPACE	--	1	--	0					1	20 A	SPARE	38
39	BUSSED SPACE	--	1			--	0			1	20 A	SPARE	40
41	BUSSED SPACE	--	1					--	0	1	20 A	SPARE	42
				Total Load:		5476 VA		4988 VA		3824 VA			
				Total Amps:		47 A		43 A		32 A			

Load Classification	Connected Load	Demand Factor	Estimated Demand	Panel Totals	
Power	100 VA	100.00%	100 VA		
Mechanical Equipment Motor	14187 VA	106.23%	15071 VA	**Total Conn. Load:**	14287 VA
				Total Est. Demand:	15171 VA
				Total Conn.:	40 A
				Total Est. Demand:	42 A

Notes:

Panelboard: EPW2EHA

Location: ELECTRICAL ELC-2034 **Volts:** 480Y/277 **A.I.C. Rating:** REFER TO FAULT CALCS
Supply From: EDM2EHA **Phases:** 3 **Mains Type:** MLO
Mounting: Surface **Wires:** 4 **Bus Rating:** 400 A
Enclosure: Type 1

CKT	Circuit Description	Trip	Poles	A (VA)		B (VA)		C (VA)		Poles	Trip	Circuit Description	CKT
1				24930	--					1	--	BUSSED SPACE	2
3	S3185 CART WASHER	125 A	3			24930	--			1	--	BUSSED SPACE	4
5								24930	--	1	--	BUSSED SPACE	6
7				10388	--					1	--	BUSSED SPACE	8
9	S0220 STEAM STERILIZER	60 A	3			10388	--			1	--	BUSSED SPACE	10
11								10388	--	1	--	BUSSED SPACE	12
13				22160	--					1	--	BUSSED SPACE	14
15	S0535 STEAM STERILIZER 1	100 A	3			22160	--			1	--	BUSSED SPACE	16
17								22160	--	1	--	BUSSED SPACE	18
19				22160	--					1	--	BUSSED SPACE	20
21	S0535 STEAM STERILIZER 2	100 A	3			22160	--			1	--	BUSSED SPACE	22
23								22160	--	1	--	BUSSED SPACE	24
25	BUSSED SPACE	--	1	--	--					1	--	BUSSED SPACE	26
27	BUSSED SPACE	--	1			--	--			1	--	BUSSED SPACE	28
29	BUSSED SPACE	--	1					--	--	1	--	BUSSED SPACE	30
31	BUSSED SPACE	--	1	--	--					1	--	BUSSED SPACE	32
33	BUSSED SPACE	--	1			--	0			1	20 A	SPARE	34
35	BUSSED SPACE	--	1					--	0	1	20 A	SPARE	36
37	BUSSED SPACE	--	1	--	0					1	20 A	SPARE	38
39	BUSSED SPACE	--	1			--	0			1	20 A	SPARE	40
41	BUSSED SPACE	--	1					--	0	1	20 A	SPARE	42
				Total Load:		79638 VA		79638 VA		79638 VA			
				Total Amps:		288 A		288 A		288 A			

Load Classification	Connected Load	Demand Factor	Estimated Demand	Panel Totals	
Power	238913 VA	100.00%	238913 VA		
				Total Conn. Load:	238913 VA
				Total Est. Demand:	238913 VA
				Total Conn.:	287 A
				Total Est. Demand:	287 A

Notes:

GENERAL SHEET NOTES

A. SEE DRAWING SERIES E5 FOR POWER RISER DIAGRAM.
B. PROVIDE PERMANENT PANEL NAMEPLATES AND TYPED PANEL SCHEDULES AFTER ALL WORK IS COMPLETE. SCHEDULES AND NAMEPLATES MUST MATCH PANEL INFORMATION, CIRCUIT BREAKERS, AND CONNECTED LOADS, IN COMPLIANCE WITH NEC 408.4
C. CONTRACTOR TO PROVIDE 3 PHASE CIRCUIT FOR ALL NEW SURGE PROTECTION DEVICES. COORDINATE FINAL CIRCUIT BREAKER SIZE WITH DEVICE.
D. CONTRACTOR TO PROVIDE 3P, 15A BREAKER AS REQUIRED FOR ALL NEW METERS.
E. ALL ELECTRICAL EQUIPMENT CIRCUIT SPACES SHALL BE BUSSED.

IHS Whiteriver Hospital
200 W Hospital Drive
Whiteriver, Arizona, 85941

IHS Project #: 131445
IHS Contract #: 75H70123R00008
IHS Award Date: 02/02/2024

BASED ON PROGRAM OF REQUIREMENTS DATED [**03/26/22**], POR AMENDMENT DATED [**02/03/25**], AND ON SCHEMATIC DRAWINGS APPROVED [**11/19/24**].

SMITHGROUP
455 NORTH THIRD STREET
SUITE 250
PHOENIX, AZ 85004
602.265.2200
smithgroup.com

ISSUED FOR	DATE
BID ADDENDUM-A	16APR26
FINAL CONSTRUCTION DOCUMENTS	23JAN26

SEALS AND SIGNATURES

Registered Professional Engineer Certificate No. 54673 DANIEL L. PETERSON State Expires 06-30-28 ARIZONA U.S.A.
EXPIRES: 6-30-28

EDM2EHA	EDM2EHB
EP2EHA	EP2ELA
EPW2EHA	

DISTRIBUTION AND PANEL BOARD SCHEDULES, SES-E LEVEL 2

Drawn By: Whittington Checked By: Baca
14904.000
PROJECT NUMBER

CD **E8.2.E1**
SHEET NUMBER

Plot Date: 4/16/2026 9:58:34 AM Whittington