PROJECT MANUAL

IHS WHITERIVER HOSPITAL

Prepared for: INDIAN HEALTH SERVICE

100% CONSTRUCTION DOCUMENTS
Project No: 14904.000
5 MARCH 2026

VOLUME 5

Prepared by:

SMITHGROUP

PHOENIX, ARIZONA

IHS REVIEW AND APPROVAL

REVIEWED BY		DATE
CIVIL	Thomas Armitage -S Digitally signed by Thomas Armitage -S Date: 2026.03.11 09:30:22 -05'00'	
MECHANICAL	Hung M. Nguyen -S Digitally signed by Hung M. Nguyen -S Date: 2026.03.11 10:24:25 -05'00'	
APPROVED	Scott P. Fillerup -S Digitally signed by Scott P. Fillerup -S DN: OID.0.9.2342.19200300.100.1.1=2000120248 + CN=Scott P. Fillerup -S, OU=People, OU=IHS, OU=HHS, O=U.S. Government, C=US Date: 2026.03.10 16:37:07-07'00'	DATE
DES PROJECT MANAGER		
CONCURRENCE	Denman K. Ondelacy -S Digitally signed by Denman K. Ondelacy -S Date: 2026.03.10 17:30:51 -07'00'	DATE
DES DEPUTY DIRECTOR	Roger N. Dahozy -S Digitally signed by Roger N. Dahozy -S Date: 2026.03.11 16:39:00 -07'00'	
AREA FACILITY PROGRAM DIRECTOR	Kenny R. Hicks -S Digitally signed by Kenny R. Hicks -S Date: 2026.03.11 15:21:17 -07'00'	
AREA OEHE DIRECTOR		

DOCUMENT 000107 - SEALS PAGE

Include on this Seals Page Document the seals of the design professionals of record required by statute to affix their seal to the documents. Where required, include a description of the Specification Sections prepared under the direction of each design professions *EDIT FOR YOUR PROJECT-USE DIVISION AND/OR SECTION NUMBERS*. If such listing is required, you may alternatively use the MasterSpec seals page instead of this SmithGroup seals page.

Architect SmithGroup, Inc. Phoenix, AZ Matthew Hess, AIA, NCARB Responsible for Divisions 01-49 Sections except where indicated as prepared by other design professionals of record. 	Structural Engineer PK Associates and Pimara Paul Koehler Scottsdale, Arizona Christa Chau, PE, SE Responsible for: Division 03, Sections 030000 and 032000; Division 04, Section 042000; Division 05, Sections 051200 and 053100; and Division 31, Section 316329
Civil Engineer Dibble & Associates Consulting Engineers, Inc. Phoenix, Arizona Christina Shannon Mauck, PE Responsible for: Division 01, Section 015713, Division 02, Section 024100, Division 09, Section 099713, Division 31, Sections 312213, 312300, 312316.16, 312323.13, 312333, 312500, Division 32, Sections 321123, 321216, 321313, 321315, Division 33, Sections 331000, 331623, 333000, 333213, 333723, 334213 	Fire Protection Engineer SmithGroup, Inc. Phoenix, AZ Andrew Ochsankehl, PE Responsible for: Division 13, Section 131200*; Division 21, Sections 211300, 213000, 210533; Division 27, Section 273226; Division 28, Section 283111 *Fire Protection Related Requirements Only

Electrical Engineer SmithGroup, Inc. Phoenix, AZ Daniel L. Peterson, PE Responsible for: Division 26, except for those Sections labeled with “WWTP” 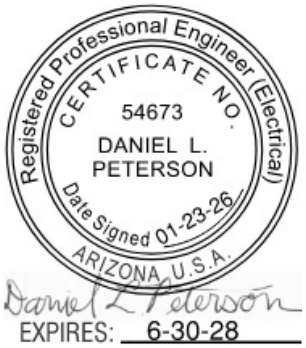 	Communications (AV, IT, Security) Designer SmithGroup, Inc. Washington, DC David K. Glenn, RCDD Responsible for: Division 27, Sections 270413, 270526, 270528, 270536, 270544, 270553, 271100, 271300, 271500, 272100, 273226, 274116, 275113, 275119, 275123, 275223, 275313, 275316 and 275319; and Division 28, Sections 280413, 280513, 280526, 280528, 281300, 281600, 282300 and 285000
Landscape Architect SmithGroup, Inc. Phoenix, AZ Richard P. Jones, PLA Responsible for: Division 32, Sections 321316, 321373, 321716, 321723, 323113, 323119, 323213, 324020, 328000, 329100, 329220, 329300 	Civil Engineer Dibble & Associates Consulting Engineers, Inc. Phoenix, Arizona Ian B. Mowry, PE Responsible for: Division 31, Sections 312213, 312300, 312316, 312323, 312500; Division 32, Sections 321123, 321216, 321315; Division 33, Section 4213; Division 34, Sections 340114, 347113, 347116 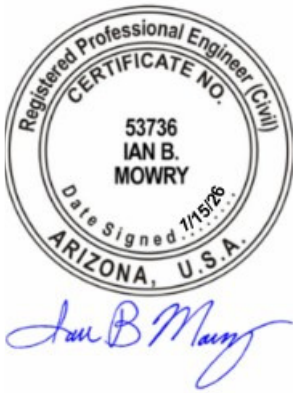

Structural Engineer Morrison-Maierle Phoenix, Arizona Michael Brennan, PE Responsible for structural specifications for the WWTPs: Division 03: 033000; Division 05: 051400, 055000, 055200, 055300; Division 13: 133419; Division 41: 413313, 413313.01 	Electrical Engineer Morrison-Maierle Phoenix, Arizona Michael Brandt, PE Responsible for electrical specifications for the WWTPs: Division 26: 260400, 260519, 260523, 260526, 260529, 260533, 260536, 260543, 260544, 260548.16, 260553, 260573.13, 260573.16, 260573.19, 260913, 260923, 262213, 262413, 262416, 262419, 262713, 262726, 262813, 262816, 262923, 263213, 263353, 263600, 264313, 265100, 265600
Plumbing Engineer Morrison-Maierle Phoenix, Arizona Jody Waverek, PE Responsible for plumbing specifications for the WWTPs: Division 22: 220517, 220518, 220519, 220523.12, 220523.14, 220529, 220548, 220553, 220719, 221116, 221119, 221123, 221123.13, 221316, 221429, 223300, 224213.13, 224213.16, 224216.13, 224216.16, 224223, 224500 	Mechanical Engineer Morrison-Maierle Phoenix, Arizona Jody Waverek, PE Responsible for mechanical specifications for the WWTPs: Division 23: 230513, 230529, 230548, 230553, 230593, 230713, 230716, 230900, 233113, 233300, 233423, 233713, 237416.11, 238126, 238239 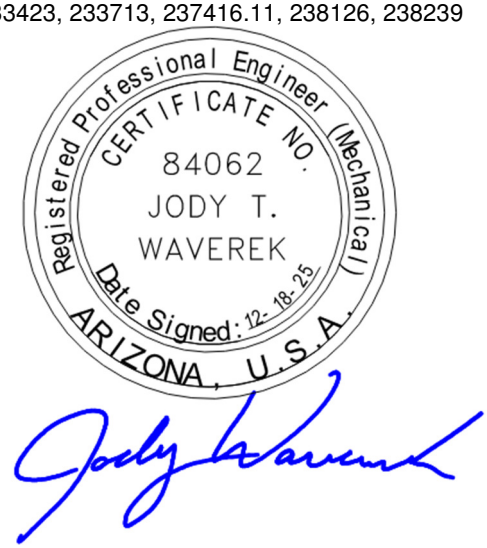

Environmental Engineer Morrison-Maierle Phoenix, Arizona Ulrike Lashley, PE Responsible for the following specifications for the WWTPs: Division 09: 099600; Division 10: 101400.01, 104352; Division 40: 400205, 400510, 400510.03, 400510.04, 400510.09, 400510.12, 400510.13, 400510.30, 400553, 400555, 400557, 406110, 406115, 406116, 406120, 406120.01, 406120.02, 406120.03, 406120.04, 406121, 406124, 406127, 406128, 406140, 406160, 406171, 406176, 406177, 406180, 406181, 406182, 406191; Division 41: 413313.17; Division 43: 431030, 431111, 432256, 432321, 432331, 432331.01, 432358, 433230, 433269, 434010; Division 46: 460754, 460754.01, 460754.02, 460754.03, 460754.04, 460754.05, 460754.06, 460754.07, 460754.08, 460754.09, 460754.10, 461155, 461155.01, 461155.02, 461155.03, 461155.04, 462113, 462113.01, 462113.02, 462113.03, 465035, 465035.01, 465035.02, 465131, 465131.01, 465131.02 	Hazardous Building Materials Mabbett & Associates, Inc. Stoneham, Massachusetts Michael Delaney, Asbestos Designer Responsible for: 028200, 028313

END OF DOCUMENT 000107

TABLE OF CONTENTS

Volume 1

DIVISION 00 - PROCUREMENT AND CONTRACTING REQUIREMENTS

SECTION 001000 - SOLICITATION, CONTRACT LINE-ITEM NUMBER (CLIN) SCHEDULE
SECTION 002000 - INSTRUCTIONS FOR PROCUREMENT
SECTION 002100 - INSTRUCTIONS
SECTION 002113 - INSTRUCTIONS TO BIDDERS
SECTION 002116 - INSTRUCTIONS TO PROPOSERS
SECTION 002200 - SUPPLEMENTARY INSTRUCTIONS
SECTION 002216 - SUPPLEMENTARY INSTRUCTIONS TO PROPOSERS
SECTION 003000 - AVAILABLE INFORMATION
SECTION 004000 - PROCUREMENT FORMS AND SUPPLEMENTS
SECTION 004300 - BID BOND FORM
SECTION 004373 - PROPOSED CONSTRUCTION SCHEDULE FORM
SECTION 004500 - REPRESENTATIONS AND CERTIFICATIONS
SECTION 005000 - CONTRACTING FORMS AND SUPPLEMENTS
SECTION 005100 - NOTICE OF AWARD
SECTION 005200 - AGREEMENT FORMS
SECTION 006000 - PROJECT FORMS
SECTION 006100 - BOND FORMS
SECTION 006200 - CERTIFICATES
SECTION 007000 - CONDITIONS OF THE CONTRACT
SECTION 007100 - CONTRACTING DEFINITIONS
SECTION 007200 - GENERAL CONDITIONS
SECTION 007300 - SUPPLEMENTAL CONDITIONS

DIVISION 01 - GENERAL REQUIREMENTS

SECTION 011000 - SUMMARY
SECTION 012300 - OPTIONS
SECTION 012500 - SUBSTITUTION PROCEDURES
SECTION 012510 - SUBSTITUTION REQUEST FORM
SECTION 012600 - CONTRACT MODIFICATION PROCEDURES
SECTION 012614 - REQUESTS FOR INFORMATION
SECTION 012900 - PAYMENT PROCEDURES
SECTION 012973 - SCHEDULE OF VALUES
SECTION 013100 - PROJECT MANAGEMENT AND COORDINATION

SECTION 013200 - CONSTRUCTION PROGRESS DOCUMENTATION
SECTION 013233 - PHOTOGRAPHIC DOCUMENTATION
SECTION 013300 - SUBMITTAL PROCEDURES
SECTION 013330 - SUBMITTAL COMPLIANCE FORM
SECTION 013526 - GOVERNMENT SAFETY REQUIREMENTS
SECTION 013573 - DELEGATED DESIGN REQUIREMENTS AND PROCEDURES
SECTION 014200 - REFERENCES
SECTION 014339 - EXTERIOR WALLS MOCKUPS
SECTION 014500.00 10 - QUALITY CONTROL
SECTION 015000 - TEMPORARY FACILITIES AND CONTROLS
SECTION 015713 - TEMPORARY EROSION AND SEDIMENT CONTROL
SECTION 015731 - INDOOR AIR QUALITY (IAQ) MANAGEMENT
SECTION 016000 - PRODUCT REQUIREMENTS
SECTION 017300 - EXECUTION
SECTION 017419 - CONSTRUCTION WASTE MANAGEMENT AND DISPOSAL
SECTION 017700 - CLOSEOUT PROCEDURES
SECTION 017823 - OPERATION AND MAINTENANCE DATA
SECTION 017839 - PROJECT RECORD DOCUMENTS
SECTION 017900 - DEMONSTRATION AND TRAINING
SECTION 018113 - SUSTAINABLE DESIGN REQUIREMENTS
SECTION 018900 - SITE CONSTRUCTION PERFORMANCE REQUIREMENTS
SECTION 019113 - GENERAL COMMISSIONING REQUIREMENTS
SECTION 019119 - BUILDING ENCLOSURE COMMISSIONING
SECTION 019200 - FACILITY OPERATION, MAINTENANCE, AND TROUBLESHOOTING MOBILE GRAPHICAL INFORMATION MANAGEMENT PLATFORM

DIVISION 02 - EXISTING CONDITIONS

SECTION 024100 - SITE DEMOLITION
SECTION 028200 - ASBESTOS ABATEMENT
SECTION 028313 - LEAD HAZARD CONTROL

DIVISION 03 – CONCRETE

SECTION 032000 - CONCRETE REINFORCEMENT
SECTION 033000 - CAST-IN-PLACE CONCRETE
SECTION 033000 - CAST-IN-PLACE CONCRETE - WWTP
SECTION 033543 - POLISHED CONCRETE FINISHING
SECTION 035400 - CAST UNERLAYMENT

DIVISION 04 – MASONRY

SECTION 042000 - UNIT MASONRY ASSEMBLIES
SECTION 042500 - TERRA COTTA RAINSCREEN SYSTEM
SECTION 042505 - STABILIZED RAMMED EARTH
SECTION 042613 - MASONRY VENEER

DIVISION 05 – METALS

SECTION 051200 - STRUCTURAL STEEL FRAMING
SECTION 051400 - STRUCTURAL ALUMINUM
SECTION 053100 - STEEL DECKING
SECTION 054000 - COLD FORMED METAL FRAMING
SECTION 054300 - SLOTTED CHANNEL FRAMING
SECTION 055000 - METAL FABRICATIONS
SECTION 055000 - METAL FABRICATIONS-WWTP
SECTION 055113 - METAL PAN STAIRS
SECTION 055119 - METAL GRATING STAIRS
SECTION 055200 - HANDRAILS AND RAILIINGS
SECTION 055300 - FABRICATED GRATING

DIVISION 06 - WOOD, PLASTICS, AND COMPOSITES

SECTION 061053 - MISCELLANEOUS ROUGH CARPENTRY
SECTION 061600 - SHEATHING
SECTION 064116 - PLASTIC-LAMINATE-CLAD ARCHITECTURAL CABINETS
SECTION 066119 - QUARTZ SURFACING FABRICATIONS
SECTION 066400 - PLASTIC PANELING
SECTION 068300 - COMPOSITE PANELING

DIVISION 07 - THERMAL AND MOISTURE PROTECTION

SECTION 071113 - BITUMINOUS DAMPPROOFING
SECTION 071326 - SELF-ADHERING SHEET WATERPROOFING
SECTION 071413 - HOT FLUID-APPLIED RUBBERIZED ASPHALT WATERPROOFING
SECTION 071900 - WATER REPELLENTS
SECTION 072100 - THERMAL INSULATION
SECTION 072600 - VAPOR RETARDERS
SECTION 072726 - FLUID-APPLIED MEMBRANE AIR BARRIERS
SECTION 074213.13 - FORMED METAL WALL PANELS
SECTION 074213.23 - METAL COMPOSITE MATERIAL WALL PANELS
SECTION 074213.33 - FORMED METAL SCREENWALL PANELS
SECTION 074293 - SOFFIT PANELS
SECTION 075419 - POLYVINYL-CHLORIDE (PVC) ROOFING
SECTION 076200 - SHEET METAL FLASHING AND TRIM
SECTION 077129 - MANUFACTURED ROOF EXPANSION JOINTS
SECTION 077200 - ROOF ACCESSORIES
SECTION 077273 - VEGETATED ROOF SYSTEMS
SECTION 078100 - APPLIED FIREPROOFING
SECTION 078123 - INTUMESCENT FIREPROOFING
SECTION 078413 - PENETRATION FIRESTOPPING
SECTION 078443 - JOINT FIRESTOPPING
SECTION 079200 - JOINT SEALANTS
SECTION 079219 - ACOUSTICAL JOINT SEALANTS
SECTION 079513.13 - INTERIOR EXPANSION JOINT COVER ASSEMBLIES
SECTION 079513.16 - EXTERIOR EXPANSION JOINT COVER ASSEMBLIES

Volume 2

DIVISION 08 – OPENINGS

SECTION 081113 - HOLLOW METAL DOORS AND FRAMES
SECTION 081216 - ALUMINUM FRAMES
SECTION 081416 - FLUSH WOOD DOORS
SECTION 081473 - SLIDING WOOD DOORS
SECTION 083113 - ACCESS DOORS AND FRAMES
SECTION 083313 - COILING COUNTER DOORS
SECTION 083323 - OVERHEAD COILING DOORS
SECTION 083343 - OVERHEAD COILING SMOKE CURTAINS

SECTION 083516 - SIDE-FOLDING SECURITY GRILLES
SECTION 084123 - INTERIOR ALUMINUM-FRAMES ENTRANCES AND STOREFRONTS
SECTION 084126 - ALL-GLASS ENTRANCES
SECTION 084229.23 - SLIDING AUTOMATIC ENTRANCES
SECTION 084243 - INTENSIVE CARE UNIT/CRITICAL CARE UNIT (ICU/CCU) ENTRANCES
SECTION 084313 - ALUMINUM-FRAMED STOREFRONTS
SECTION 084413 - GLAZED ALUMINUM CURTAIN WALLS
SECTION 085619 - PASS WINDOWS
SECTION 086200 - UNIT SKYLIGHTS
SECTION 087100 - DOOR HARDWARE
SECTION 088000 - GLAZING
SECTION 088113 - DECORATIVE GLASS GLAZING
SECTION 088300 - MIRRORS
SECTION 088813 - FIRE-RATED GLAZING

DIVISION 09 – FINISHES

SECTION 090561.13 - MOISTURE VAPOR EMISSION CONTROL
SECTION 092116.23 - GYPSUM BOARD SHAFT WALL ASSEMBLIES
SECTION 092216 - NON-STRUCTURAL METAL FRAMING
SECTION 092900 - GYPSUM BOARD
SECTION 093013 - CERAMIC TILING
SECTION 095113 - ACOUSTICAL PANEL CEILINGS
SECTION 095423 - LINEAR METAL CEILINGS
SECTION 095446 - ACOUSTICAL BAFFLE SYSTEM
SECTION 096513 - RESILIENT BASE AND ACCESSORIES
SECTION 096516 - RESILIENT SHEET FLOORING
SECTION 096519 - RESILIENT TILE FLOORING
SECTION 096566 - RESILIENT ATHLETIC FLOORING
SECTION 096623 - RESINOUS MATRIX TERRAZZO FLOORING
SECTION 096723 - RESINOUS FLOORING
SECTION 096813 - TILE CARPETING
SECTION 097200 - WALL COVERINGS
SECTION 097723 - FABRIC-WRAPPED PANELS
SECTION 098316 - ACOUSTICAL CEILING INSULATION
SECTION 098433 - SOUND ABSORBING WALL UNITS
SECTION 099113 - EXTERIOR PAINTING

SECTION 099123 - INTERIOR PAINTING
SECTION 099600 - HIGH-PERFORMANCE COATINGS
SECTION 099600 - HIGH-PERFORMANCE COATINGS - WWTP
SECTION 099713 - COATINGS FOR WELDED STEEL WATER STORAGE TANK

DIVISION 10 – SPECIALTIES

SECTION 101100 - VISUAL DISPLAY UNITS
SECTION 101400 - SIGNAGE
SECTION 101400.01 - IDENTIFYING DEVICES
SECTION 102113.14 - STAINLESS-STEEL TOILET COMPARTMENTS
SECTION 102123 - CUBICLE CURTAINS AND TRACK
SECTION 102239 - FOLDING PANEL PARTITIONS
SECTION 102600 - WALL AND DOOR PROTECTION
SECTION 102800 - TOILET, BATH, AND LAUNDRY ACCESSORIES
SECTION 103100 - MANUFACTURED FIREPLACES
SECTION 104352 - FIRST AID AND SAFETY EQUIPMENT
SECTION 104413 - FIRE PROTECTION CABINETS
SECTION 104416 - FIRE EXTINGUISHERS
SECTION 105113 - METAL LOCKERS
SECTION 107516 - GROUND-SET FLAGPOLES
SECTION 108219 - EXTERIOR SOUND PANELS

DIVISION 11 – EQUIPMENT

SECTION 110800 - EQUIPMENT COMMISSIONING
SECTION 111313 - LOADING DOCK BUMPERS
SECTION 111316 - LOADING DOCK SEALS
SECTION 111319 - STATIONARY LOADING DOCK EQUIPMENT
SECTION 111326 - LOADING DOCK LIGHTS
SECTION 114000 - FOODSERVICE EQUIPMENT
SECTION 117000 - HEALTHCARE EQUIPMENT
SECTION 117100 - MEDICAL STERILIZING EQUIPMENT
SECTION 117311 - PATIENT LIFTS
SECTION 118129 - FACILITY FALL PROTECTION
SECTION 118201 - HYDRAULIC CART TIPPER
SECTION 118226 - FACILITY WASTE COMPACTORS

DIVISION 12 – FURNISHINGS

SECTION 122413 - ROLLER WINDOW SHADES
SECTION 123553 - GENERAL REQUIREMENTS FOR LABORATORY CASEWORK AND FUME HOODS
SECTION 123553.03 - ADAPTABLE LABORATORY CASEWORK SYSTEMS
SECTION 123553.19 - WOOD LABORATORY CASEWORK
SECTION 123570 - HEALTHCARE CASEWORK
SECTION 123623.13 - PLASTIC-LAMINATE-CLAD COUNTERTOPS
SECTION 123661.16 - SOLID SURFACING COUNTERTOPS
SECTION 123661.19 - QUARTZ AGGLOMERATE COUNTERTOPS
SECTION 124816 - ENTRANCE FLOOR GRILLES
SECTION 126100 - FIXED UPHOLSTERED SEATING

DIVISION 13 - SPECIAL CONSTRUCTION

SECTION 131200 - ALUMINUM ROOFTOP HELISTOPS
SECTION 131224 - EXTERIOR WATER FEATURE
SECTION 133419 - METAL BUILDING SYSTEMS
SECTION 134900 - RADIATION PROTECTION
SECTION 134920 - RFI/EMI SHIELDING

DIVISION 14 - CONVEYING EQUIPMENT

SECTION 142100 - ELECTRIC TRACTION ELEVATORS
SECTION 149200 - PNEUMATIC TUBE SYSTEM – 6 INCH

Volume 3

DIVISION 21 - FIRE SUPPRESSION

SECTION 210533 - HEAT TRACING FOR FIRE-SUPPRESSION PIPING
SECTION 210800 - FIRE SUPPRESSION SYSTEMS COMMISSIONING
SECTION 211300 - FIRE SPRINKLER AND STANDPIPE SYSTEMS
SECTION 213000 - FIRE PUMPS, PUMP CONTROLLERS, AND OTHER APPURTENANCES

DIVISION 22 – PLUMBING

SECTION 220513 - COMMON MOTOR REQUIREMENTS FOR PLUMBING EQUIPMENT
SECTION 220516 - EXPANSION FITTINGS AND LOOPS FOR PLUMBING PIPING
SECTION 220517 - SLEEVES AND SLEEVE SEALS FOR PLUMBING PIPING
SECTION 220517 - SLEEVES AND SLEEVE SEALS PLUMBING PIPING-WWTP
SECTION 220518 - ESCUTCHEONS FOR PLUMBING PIPING
SECTION 220518 - ESCUTCHEONS FOR PLUMBING PIPING - WWTP
SECTION 220519 - METERS AND GAGES FOR PLUMBING PIPING
SECTION 220519 - METERS AND GAGES FOR PLUMBING PIPING - WWTP
SECTION 220523.12 - BALL VALVES FOR PLUMBING PIPING
SECTION 220523.12 - BALL VALVES FOR PLUMBING PIPING - WWTP
SECTION 220523.13 - BUTTERFLY VALVES FOR PLUMBING PIPING
SECTION 220523.14 - CHECK VALVES FOR PLUMBING PIPING
SECTION 220523.14 - CHECK VALVES FOR PLUMBING PIPING - WWTP
SECTION 220523.15 - GATE VALVES FOR PLUMBING PIPING
SECTION 220529 - HANGERS AND SUPPORTS FOR PLUMBING PIPING AND EQUIPMENT
SECTION 220529 - HANGERS AND SUPPORTS FOR PLUMBING PIPING AND EQUIPMENT - WWTP
SECTION 220533 - HEAT TRACING FOR PLUMBING PIPING
SECTION 220548 - VIBRATION AND SEISMIC CONTROLS FOR PLUMBING PIPING AND EQUIPMENT
SECTION 220548 - VIBRATION AND SEISMIC CONTROLS FOR PLUMBING PIPING AND EQUIPMENT - WWTP
SECTION 220553 - IDENTIFICATION FOR PLUMBING PIPING AND EQUIPMENT–
SECTION 220553 - IDENTIFICATION FOR PLUMBING PIPING AND EQUIPMENT - WWTP
SECTION 220716 - PLUMBING EQUIPMENT INSULATION
SECTION 220719 - PLUMBING PIPING INSULATION
SECTION 220719 - PLUMBING PIPING INSULATION - WWTP
SECTION 220800 - PLUMBING SYSTEMS COMMISSIONING
SECTION 221113 - FACILITY WATER DISTRIBUTION PIPING
SECTION 221116 - DOMESTIC WATER PIPING
SECTION 221116 - DOMESTIC WATER PIPING - WWTP
SECTION 221117 - RECLAIMED-WATER PIPING
SECTION 221119 - DOMESTIC WATER PIPING SPECIALTIES
SECTION 221119 - DOMESTIC WATER PIPING SPECIALTIES - WWTP
SECTION 221123 - DOMESTIC WATER PUMPS
SECTION 221123 - DOMESTIC WATER PUMPS - WWTP
SECTION 221123.13 - DOMESTIC-WATER PACKAGED BOOSTER PUMPS

SECTION 221123.13 - DOMESTIC-WATER PACKAGED BOOSTER PUMPS - WWTP
SECTION 221316 - SANITARY WASTE AND VENT PIPING
SECTION 221316 - SANITARY WASTE AND VENT PIPING - WWTP
SECTION 221323 - SANITARY WASTE INTERCEPTORS
SECTION 221413 - FACILITY STORM DRAINAGE PIPING
SECTION 221423 - STORM DRAINAGE PIPING SPECIALTIES
SECTION 221429 - SUMP PUMPS
SECTION 221429 - SUMP PUMPS - WWTP
SECTION 223100 - DOMESTIC WATER SOFTENERS
SECTION 223200 - DOMESTIC WATER FILTRATION EQUIPMENT
SECTION 223300 - ELECTRIC, DOMESTIC-WATER HEATERS
SECTION 223300 - ELECTRIC, DOMESTIC-WATER HEATERS - WWTP
SECTION 224213.13 - COMMERCIAL WATER CLOSETS
SECTION 224213.13 - COMMERCIAL WATER CLOSETS - WWTP
SECTION 224213.16 - COMMERCIAL URINALS
SECTION 224213.16 - COMMERCIAL URINALS - WWTP
SECTION 224216.13 - COMMERCIAL LAVATORIES
SECTION 224216.13 - COMMERCIAL LAVATORIES - WWTP
SECTION 224216.16 - COMMERCIAL SINKS
SECTION 224216.16 - COMMERCIAL SINKS - WWTP
SECTION 224223 - COMMERCIAL SHOWER
SECTION 224223 - COMMERCIAL SHOWER - WWTP
SECTION 224300 - HEALTHCARE PLUMBING FIXTURES
SECTION 224500 - EMERGENCY PLUMBING FIXTURES
SECTION 224500 - EMERGENCY PLUMBING FIXTURES - WWTP
SECTION 224700 - DRINKING FOUNTAINS AND WATER COOLERS
SECTION 226113 - COMPRESSED-AIR PIPING FOR LABORATORY AND HEALTHCARE FACILITIES
SECTION 226119 - COMPRESSED-AIR EQUIPMENT FOR LABORATORY AND HEALTHCARE FACILITIES
SECTION 226213 - VACUUM PIPING FOR LABORATORY AND HEALTHCARE FACILITIES
SECTION 226219 - VACUUM EQUIPMENT FOR LABORATORY AND HEALTHCARE FACILITIES
SECTION 226313 - GAS PIPING FOR LABORATORY AND HEALTHCARE FACILITIES

SECTION 226400 - MEDICAL GAS ALARMS
SECTION 226713 - PROCESSED WATER PIPING FOR LABORATORY AND HEALTHCARE FACILITIES
SECTION 226719 - PROCESSED WATER EQUIPMENT FOR LABORATORY AND HEALTHCARE FACILITIES

DIVISION 23 - HEATING, VENTILATING, AND AIR-CONDITIONING (HVAC)

SECTION 230130.51 - HVAC AIR-DISTRIBUTION SYSTEM CLEANING
SECTION 230513 - COMMON MOTOR REQUIREMENTS FOR HVAC AND PLUMBING EQUIPMENT
SECTION 230513 - COMMON MOTOR REQUIREMENTS FOR HVAC AND PLUMBING EQUIPMENT - WWTP
SECTION 230516 - EXPANSION FITTINGS AND LOOPS FOR HVAC PIPING
SECTION 230517 - SLEEVES AND SLEEVE SEALS FOR HVAC AND PLUMBING PIPING
SECTION 230518 - ESCUTCHEONS FOR HVAC PIPING
SECTION 230519 - METERS AND GAGES FOR HVAC PIPING
SECTION 230523 - GENERAL-DUTY VALVES FOR HVAC PIPING
SECTION 230529 - HANGERS AND SUPPORTS FOR HVAC PIPING AND EQUIPMENT
SECTION 230529 - HANGERS AND SUPPORTS FOR HVAC PIPING AND EQUIPMENT - WWTP
SECTION 230548 - VIBRATION AND SEISMIC CONTROLS FOR HVAC
SECTION 230548 - VIBRATION AND SEISMIC CONTROLS FOR HVAC - WWTP
SECTION 230553 - IDENTIFICATION FOR HVAC PIPING AND EQUIPMENT
SECTION 230553 - IDENTIFICATION FOR HVAC PIPING AND EQUIPMENT - WWTP
SECTION 230593 - TESTING, ADJUSTING, AND BALANCING FOR HVAC
SECTION 230593 - TESTING, ADJUSTING, AND BALANCING FOR HVAC - WWTP
SECTION 230713 - DUCT INSULATION
SECTION 230713 - DUCT INSULATION - WWTP
SECTION 230716 - HVAC EQUIPMENT INSULATION
SECTION 230716 - HVAC EQUIPMENT INSULATION - WWTP
SECTION 230719 - HVAC PIPING INSULATION
SECTION 230800 - HVAC SYSTEMS COMMISSIONING
SECTION 230900 - INSTRUMENTATION AND CONTROL FOR HVAC
SECTION 231113 - FACILITY FUEL-OIL PIPING
SECTION 231126 - FACILITY LIQUEFIED-PETROLEUM GAS PIPING
SECTION 232113 - HYDRONIC PIPING
SECTION 232116 - HYDRONIC PIPING SPECIALTIES
SECTION 232123 - HYDRONIC PUMPS
SECTION 2323000 - REFRIGERANT PIPING

SECTION 232513 - WATER TREATMENT FOR CLOSED-LOOP HYDRONIC SYSTEMS
SECTION 233113 - METAL DUCTS
SECTION 233113 - METAL DUCTS - WWTP
SECTION 233300 - AIR DUCT ACCESSORIES
SECTION 233300 - AIR DUCT ACCESSORIES - WWTP
SECTION 233416 - CENTRIFUGAL HVAC FANS
SECTION 233423 - HVAC POWER VENTILATORS
SECTION 233423 - HVAC POWER VENTILATORS - WWTP
SECTION 233433 - AIR CURTAINS
SECTION 233600 - AIR TERMINAL UNITS
SECTION 233713 - DIFFUSERS, REGISTERS, AND GRILLES
SECTION 233713 - DIFFUSERS, REGISTERS, AND GRILLES - WWTP
SECTION 233723 - HVAC GRAVITY VENTILATORS
SECTION 234100 - PARTICULATE AIR FILTRATION
SECTION 234200 - GAS-PHASE AIR FILTRATION
SECTION 235213 - ELECTRIC BOILERS
SECTION 235700 - HEAT EXCHANGERS FOR HVAC
SECTION 236423.13 - AIR-COOLED, SCROLL WATER CHILLERS
SECTION 236423.14 - AIR SOURCE CHILLER-HEATER
SECTION 236426 - AIR-COOLED CENTRIFUGAL WATER CHILLERS
SECTION 237200 - AIR-TO-AIR ENERGY RECOVERY EQUIPMENT
SECTION 237323 - CUSTOM OUTDOOR CENTRAL-STATION AIR-HANDLING UNITS
SECTION 237416.11 - PACKAGED, SMALL-CAPACITY, ROOFTOP AIR-CONDITIONING UNITS
SECTION 237416.11 - PACKAGED, SMALL-CAPACITY, ROOFTOP AIR-CONDITIONING UNITS - WWTP
SECTION 238123.12 - LARGE CAPACITY (7 TONS (25 KW AND LARGER), COMPUTER-ROOM AIR-CONDITIONERS
SECTION 238123.13 - COMPUTER-ROOM AIR-CONDITIONERS
SECTION 238126 - SPLIT-SYSTEM AIR-CONDITIONERS
SECTION 238126 - SPLIT-SYSTEM AIR-CONDITIONERS - WWTP
SECTION 238214 - CHILLED BEAMS
SECTION 238216 - AIR COILS
SECTION 238219 - FAN COIL UNITS
SECTION 238239 - UNIT HEATERS
SECTION 238239 - UNIT HEATERS - WWTP
SECTION 238316 - RADIANT-HEATING HYDRONIC PIPING
SECTION 238413 - HUMIDIFIERS
SECTION 238610 - BI-POLAR IONIZATION AIR PURIFICATION SYSTEM

DIVISION 25 - INTEGRATED AUTOMATION

NOT APPLICABLE

Volume 4

DIVISION 26 – ELECTRICAL

SECTION 260400 - COMMON WORK RESULTS FOR ELECTRICAL
SECTION 260400 - COMMON WORK RESULTS FOR ELECTRICAL - WWTP
SECTION 260519 - LOW-VOLTAGE ELECTRICAL POWER CONDUCTORS AND CABLES
SECTION 260519 - LOW-VOLTAGE ELECTRICAL POWER CONDUCTORS AND CABLES – WWTP
SECTION 260523 - CONTROL-VOLTAGE ELECTRICAL POWER CABLES
SECTION 260523 - CONTROL-VOLTAGE ELECTRICAL POWER CABLES - WWTP
SECTION 260526 - GROUNDING AND BONDING FOR ELECTRICAL SYSTEMS
SECTION 260526 - GROUNDING AND BONDING FOR ELECTRICAL SYSTEMS - WWTP
SECTION 260529 - HANGERS AND SUPPORTS FOR ELECTRICAL SYSTEMS
SECTION 260529 - HANGERS AND SUPPORTS FOR ELECTRICAL SYSTEMS - WWTP
SECTION 260533 - RACEWAYS AND BOXES FOR ELECTRICAL SYSTEMS
SECTION 260533 - RACEWAYS AND BOXES FOR ELECTRICAL SYSTEMS - WWTP
SECTION 260536 - CABLE TRAYS FOR ELECTRICAL SYSTEMS - WWTP
SECTION 260539 - UNDERFLOOR RACEWAYS FOR ELECTRICAL SYSTEMS
SECTION 260543 - UNDERGROUND DUCTS AND RACEWAYS FOR ELECTRICAL SYSTEMS - WWTP
SECTION 260543 - UNDERGROUND DUCTS AND RACEWAYS FOR ELECTRICAL SYSTEMS-WWTP - M-M
SECTION 260544 - SLEEVES AND SLEEVE SEALS FOR ELECTRICAL RACEWAYS AND CABLING
SECTION 260544 - SLEEVES AND SLEEVE SEALS FOR ELECTRICAL RACEWAYS AND CABLING - WWTP
SECTION 260548.16 - SEISMIC CONTROLS FOR ELECTRICAL SYSTEMS
SECTION 260548.16 - SEISMIC CONTROLS FOR ELECTRICAL SYSTEMS - WWTP
SECTION 260553 - IDENTIFICATION FOR ELECTRICAL SYSTEMS
SECTION 260553 - IDENTIFICATION FOR ELECTRICAL SYSTEMS - WWTP
SECTION 260573.13 - OVERCURRENT PROTECTIVE DEVICE SHORT-CIRCUIT STUDY
SECTION 260573.13 - OVERCURRENT PROTECTIVE DEVICE SHORT-CIRCUIT STUDY - WWTP
SECTION 260573.16 - OVERCURRENT PROTECTIVE DEVICE COORDINATION STUDY

SECTION 260573.16 - OVERCURRENT PROTECTIVE DEVICE COORDINATION STUDY - WWTP
SECTION 260573.19 - OVERCURRENT PROTECTIVE DEVICE ARC-FLASH STUDY
SECTION 260573.19 - OVERCURRENT PROTECTIVE DEVICE ARC-FLASH STUDY – WWTP
SECTION 260800 - ELECTRICAL SYSTEMS COMMISSIONING
SECTION 260913 - ELECTRICAL POWER MONITORING AND CONTROL
SECTION 260913 - ELECTRICAL POWER MONITORING AND CONTROL - WWTP
SECTION 260923 - LIGHTING CONTROL DEVICES
SECTION 260923 - LIGHTING CONTROL DEVICES - WWTP
SECTION 260943 - NETWORK LIGHTING CONTROLS
SECTION 260943.23 - RELAY-BASED LIGHTING CONTROLS
SECTION 262213 - LOW-VOLTAGE DISTRIBUTION TRANSFORMERS
SECTION 262213 - LOW-VOLTAGE DISTRIBUTION TRANSFORMERS - WWTP
SECTION 262300 - LOW-VOLTAGE SWITCHGEAR
SECTION 262313 - PARALLELING LOW-VOLTAGE SWITCHGEAR
SECTION 262413 - SWITCHBOARDS
SECTION 262413 - SWITCHBOARDS - WWTP
SECTION 262416 - PANELBOARDS
SECTION 262416 - PANELBOARDS - WWTP
SECTION 262419 - MOTOR CONTROL CENTERS - WWTP
SECTION 262713 - ELECTRICITY METERING
SECTION 262713 - ELECTRICITY METERING - WWTP
SECTION 262726 - WIRING DEVICES
SECTION 262726 - WIRING DEVICES - WWTP
SECTION 262743 - ELECTRIC-VEHICLE SERVICE EQUIPMENT - AC LEVEL 1 AND LEVEL 2
SECTION 262813 - FUSES
SECTION 262813 - FUSES - WWTP
SECTION 262816 - ENCLOSED SWITCHES AND CIRCUIT BREAKERS
SECTION 262816 - ENCLOSED SWITCHES AND CIRCUIT BREAKERS - WWTP
SECTION 262923 - VARIABLE-FREQUENCY MOTOR CONTROLLERS
SECTION 262923 - VARIABLE-FREQUENCY MOTOR CONTROLLERS - WWTP
SECTION 263100 - PHOTOVOLTAIC COLLECTORS
SECTION 263213 - ENGINE GENERATORS
SECTION 263213 - ENGINE GENERATORS - WWTP
SECTION 263233 - ROTARY UNINTERRUPTIBLE POWER UNITS
SECTION 263353 - STATIC UNINTERRUPTIBLE POWER SUPPLY
SECTION 263353 - STATIC UNINTERRUPTIBLE POWER SUPPLY - WWTP

SECTION 263600 - TRANSFER SWITCHES
SECTION 263600 - TRANSFER SWITCHES - WWTP
SECTION 263650 - GENERATOR DOCKING STATIONS
SECTION 264113 - LIGHTNING PROTECTION FOR STRUCTURES
SECTION 264313 - SURGE PROTECTION FOR LOW-VOLTAGE ELECTRICAL POWER CIRCUITS - WWTP
SECTION 264313 - SURGE PROTECTION FOR LOW-VOLTAGE ELECTRICAL POWER CIRCUITS-WWTP
SECTION 265100 - INTERIOR LIGHTING
SECTION 265100 - INTERIOR LIGHTING - WWTP
SECTION 265600 - EXTERIOR LIGHTING
SECTION 265600 - EXTERIOR LIGHTING - WWTP

DIVISION 27 – COMMUNICATIONS

SECTION 270413 - COMMON SUBMITTAL REQUIREMENTS FOR COMMUNICATIONS
SECTION 270526 - GROUNDING AND BONDING FOR COMMUNICATIONS SYSTEMS
SECTION 270528 - PATHWAYS FOR COMMUNICATIONS SYSTEMS
SECTION 270536 - CABLE TRAYS FOR COMMUNICATIONS SYSTEMS
SECTION 270544 - SLEEVES AND SLEEVE SEALS FOR COMMUNICATIONS PATHWAYS AND CABLING
SECTION 270553 - IDENTIFICATION FOR COMMUNICATIONS SYSTEMS
SECTION 270800 - COMMUNICATIONS SYTEMS COMMISSIONING
SECTION 271100 - COMMUNICATIONS EQUIPMENT ROOM FITTINGS
SECTION 271300 - COMMUNICATIONS BACKBONE CABLING
SECTION 271500 - COMMUNICATIONS HORIZONTAL CABLING
SECTION 272100 - DATA COMMUNICATIONS NETWORK EQUIPMENT
SECTION 273226 - TWO-WAY COMMUNICATIONS SYSTEM
SECTION 274116 - INTEGRATED AUDIOVISUAL SYSTEMS AND EQUIPMENT
SECTION 275113 - PAGING SYSTEMS
SECTION 275119 - SOUND MASKING SYSTEMS
SECTION 275123 - EMERGENCY HELP POINTS AND CALL BOXES
SECTION 275223 - NURSE CALL AND CODE BLUE SYSTEMS
SECTION 275313 - SYNCHRONIZED CLOCK SYSTEM
SECTION 275316 - PATIENT, INFANT, AND EQUIPMENT RFID TRACKING SYSTEMS
SECTION 275319 - DISTRIBUTED ANTENNA STSYTEMS

DIVISION 28 - ELECTRONIC SAFETY AND SECURITY

SECTION 280413 - COMMON SUBMITTAL REQUIREMENTS FOR ELECTRONIC SAFETY AND SECURITY
SECTION 280513 - CONDUCTORS AND CABLES FOR ELECTRONIC SAFETY AND SECURITY
SECTION 280526 - GROUNDING AND BONDING FOR ELECTRONIC SAFETY AND SECURITY
SECTION 280528 - PATHWAYS FOR ELECTRONIC SAFETY AND SECURITY
SECTION 280544 - SLEEVES AND SLEEVE SEALS FOR ELECTRONIC SAFETY AND SECURITY PATHWAYS AND CABLING
SECTION 280800 - ELECTRONIC SAFETY AND SECURITY SYSTEMS COMMISSIONING
SECTION 281300 – ACCESS CONTROL
SECTION 281600 - INTRUSION DETECTION SYSTEM
SECTION 282300 - VIDEO SURVEILLANCE
SECTION 283111 - DIGITAL, ADDRESSABLE FIRE-ALARM SYSTEM
SECTION 285000 - SECURITY CONTROL SYSTEM

Volume 5

DIVISION 31 – EARTHWORK

SECTION 312213 - ROUGH GRADING
SECTION 312300 - EXCAVATION AND FILL
SECTION 312316.16 - STRUCTURAL EXCAVATION FOR MINOR STRUCTURES
SECTION 312323.13 - BACKFILL
SECTION 312333 - TRENCHING AND BACKFILL
SECTION 312500 - EROSION AND SEDIMENTATION CONTROLS
SECTION 313116 - TERMITE CONTROL
SECTION 316329 - DRILLED CONCRETE PIERS AND SHAFTS

DIVISION 32 - EXTERIOR IMPROVEMENTS

SECTION 321123 - AGGREGATE BASE COURSES
SECTION 321216 - ASPHALT PAVING
SECTION 321223 - IMPRINTED ASPHALT
SECTION 321313 - CONCRETE PAVING
SECTION 321315 - CONCRETE WALKS, CURBS AND GUTTERS
SECTION 321316 - DECORATIVE CONCRETE PAVING
SECTION 321373 - CONCRETE PAVING JOINT SEALANTS
SECTION 321716 - MANUFACTURED TRAFFIC-CALMING DEVICES
SECTION 321723 - PAVEMENT MARKINGS
SECTION 323113 - CHAIN LINK FENCES AND GATES
SECTION 323119 - DECORATIVE METAL FENCES AND GATES
SECTION 323213 - CAST-IN-PLACE CONCRETE RETAINING WALLS
SECTION 324020 - PIPE AND TUBE RAILINGS
SECTION 328000 - IRRIGATION SYSTEM
SECTION 329100 - SOIL PREPARATION (TOPSOIL)
SECTION 329220 - NATIVE SEEDING
SECTION 329300 - EXTERIOR PLANTINGS

DIVISION 33 - UTILITIES

SECTION 331000 - WATER UTILITIES
SECTION 331623 - WELDED STEEL WATER STORAGE TANK AND FOUNDATION
SECTION 333000 - SANITARY SEWERAGE UTILITIES
SECTION 333213 - PACKAGE LIFT STATION
SECTION 333723 - SLIDE GATE
SECTION 334213 - STORMWATER CULVERTS AND DRAINAGE FACILITIES

DIVISION 34 - TRANSPORTATION

SECTION 340114 - SIGNING AND MARKING
SECTION 344113 - TRAFFIC SIGNALS
SECTION 347100 - ADOT REQUIREMENTS
SECTION 347113 - VEHICLE BARRIERS
SECTION 347116 - IMPACT ATTENUATING DEVICES

DIVISION 40 - PROCESS INTERCONNECTIONS

SECTION 400205 - PIPING SCHEDULE
SECTION 400510 - PIPING - GENERAL
SECTION 400510.03 - DPS - EPOXY LINED DUCTILE IRON PIPE AND FITTINGS
SECTION 400510.04 - DPS - MILL TYPE STEEL PIPE AND FITTINGS (GENRAL SERVICE)
SECTION 400510.09 - DPS STAINLESS STEEL PIPE AND FITTINGS
SECTION 400510.12 - DPS - POLYVINYL CHLORIDE (PVC) PIPE AND FITTINGS
SECTION 400510.13 - DPS - CHLORINATED POLYVINYL CHLORIDE (CPVC) PIPE AND FITTINGS
SECTION 400510.30 - DPS HIGH DENSITY POLYETHYLENE (HDPE) PIPE AND TUBING
SECTION 400533 - MANUAL VALVES
SECTION 400555 - SELF CONTAINED AUTOMATIC VALVES
SECTION 400557 - POWER OPERATED GATE AND VALVE ASSEMBLIES
SECTION 406110 - PROCESS INSTRUMENTATION AND CONTROLS SYSTEM (PICS) GENERAL
SECTION 406115 - PICS SCOPE OF WORK
SECTION 406116 - PICS ENCLOSURES
SECTION 406120 - PROCESS CONTROL NARRATIVES (PCNs)
SECTION 406120.01- PCN-INFLUENT PUMP STATION
SECTION 406120.02 - PCN-EQ BASIN TRANSFER PUMP STATION
SECTION 406120.03 - PCN-AEORBIC SLUDGE DIGESTER
SECTION 406120.04 - PCN-EFFLUENT PUMPING SYSTEM
SECTION 406121 - PICS PROCESS TAPS AND PRIMARY ELEMENTS
SECTION 406124 - PICS INSTRUMENTATION CABLE
SECTION 406127 - PICS INDUSTRIAL ETHERNET NETWORK
SECTION 406128 - PICS MISCELLANEOUS EQUIPMENT
SECTION 406140 - PICS INSTRUMENTATION REQUIREMENTS
SECTION 406160 - PICS PLC I-O INDEX
SECTION 406171 - INSTRUMENT SPECIFICATIONS
SECTION 406176 - PLANT CONTROL SYSTEM (PCS) SOFTWARE REQUIREMENTS
SECTION 406177 - PLANT CONTROL SYSTEM (PCS) HARDWARE AND SOFTWARE
SECTION 406180 - PICS TESTING, CALIBRATION, AND INSTALLATION VERIFICATION
SECTION 406181 - PICS COMMISSIONING AND START-UP
SECTION 406182 - PICS PERSONNEL TRAINING
SECTION 406191- PICS SPARE PARTS

DIVISION 41 - MATERIAL PROCESSING AND HANDLING EQUIPMENT

SECTION 412213.17 - DAVIT AND GANTRY CRANES
SECTION 413313 - OVERHEAD TRAVELING CRANES
SECTION 413313.01 - DETAIL SPECIFICATION - TREATMENT PLANT BRIDGE CRANE

DIVISION 43 - PROCESS GAS AND LIQUID HANDLING, PURIFICATION, AND STORAGE EQUIPMENT

SECTION 431030 - SUBMERSIBLE NON-CLOG CENTIFUGAL PUMPS
SECTION 431111 - BLOWERS
SECTION 432256 - SUBMERSIBLE MIXERS
SECTION 432321 - RECLAIMED EFFLUENT PUMPING SYSTEMS
SECTION 432331 - NPW PUMPING SYSTEMS
SECTION 432331.01 - PCN NON-POTABLE WATER SYSTEM
SECTION 432332 - RECLAIMED WATER PUMPING SYSTEM
SECTION 432358 - POSITIVE DISPLACEMENT ROTARY LOBE PUMPS
SECTION 433230 - ODOR CONTROL BIOTRICKLING SYSTEM
SECTION 433269 - CHEMICAL FEED SKID – PERISTALTIC PUMPS
SECTION 434010 - CHEMICAL STORAGE AND CONTAINMENT

DIVISION 46 – WATER AND WASTEWATER EQUIPMENT

SECTION 460754 - MEMBRANE BIOREACTOR PACKAGE PLANT SYSTEM
SECTION 460754.01 - DES-SKID COMPONENTS
SECTION 460754.02 - DES-SUBMERSIBLE MIXERS
SECTION 460754.03 - DES-FLEXIBLE MEMBRANE DIFFUSERS
SECTION 460754.04 - DES-SUBMERSIBLE PUMPS
SECTION 460754.05 - DES SELF-PRIMING CENTRIFUGAL PUMPS
SECTION 460754.06 - DES-REGENERATIVE BLOWERS
SECTION 460754.07 - DES-PROCESS INSTRUMENTATION
SECTION 460754.08 - PACKAGE MBR SYSTEM - LAYOUT DRAWINGS
SECTION 460754.09 - PACKAGE MBR SYSTEM - P&ID DDRAWINGS
SECTION 460754.10 - DES-CHEMICAL FEED SKIDS
SECTION 461155 - SLUDGE DEWATERING SYSTEM - GENERAL
SECTION 461155.01 - DES VOLUTE PRESS
SECTION 461155.02 - DES POLYMER BLENDING SYSTEM
SECTION 461155.03 - DES SCREW CONVEYOR
SECTION 461155.04 - PCN-SLUDGE DEWATERING SYSTEM
SECTION 462113 - SCREENING AND GRIT REMOVAL SYSTEM - GENERAL

SECTION 462113.1 - DES - COARSE SCREENING AND GRIT REMOVAL PACKAGE SYSTEM
SECTION 462113.2 - DES - FINE SCREENING
SECTION 462113.3 - DES - MANUAL BAR SCREEN
SECTION 465035 - WASTEWATER ULTRAVIOLET DISINFECTION SYSTEM
SECTION 465035.01 - DES-HOSPITAL WASTEWATER ULTRAVIOLET DISINFECTION SYSTEM
SECTION 465035.02 - DES HON-DAH WASTEWATER ULTRAVIOLET DISINFECTION SYSTEM
SECTION 465131 - AERATION EQUIPMENT – GENERAL
SECTION 465131.01 - DES-FINE BUBBLE AERATION
SECTION 465131.02 - DES-COARSE BUBBLE AERATION

END OF TABLE OF CONTENTS

SECTION 312213 - ROUGH GRADING

PART 1 - GENERAL

1.1 SUMMARY

A. This work shall consist of rounding and shaping slopes in accordance with the plans and where designated by the Engineer.

1.2 RELATED DOCUMENTS

A. Drawings and general provisions of the Contract apply to work of this section, and unless otherwise indicated:
   1. Maricopa Association of Governments Uniform Standard Specifications for Public Works Construction, Part 200 - Earthwork, 2025 Revision to the 2020 Edition, if more stringent than herein specified.
   2. Arizona Department of Transportation 2021 Standard Specifications for Road and Bridge Construction, Division II for all work performed within the Arizona Department of Transportation State Route 73 right-of-way
   3. Geotechnical Exploration Report prepared by ATEK Engineering Consultants, dated April 4, 2025, ATEK Project #230211.

PART 2 - MATERIALS – NOT USED

PART 3 - EXECUTION

3.1 GENERAL

A. The top of cut slopes shall be rounded by excavating to blend the cut slopes with the adjacent natural terrain. At the intersections of cuts and fills, slopes shall be adjusted and warped to blend into each other or into the natural ground surface without noticeable break.

B. Slopes will be staked for flattening and rounding in places where the material is other than solid rock. Rock formations such as shales, decomposed sandstone and granite that can be readily excavated by means of hand tools, shall have the slopes flattened and rounded the same as the earth slopes. A layer of earth overlying a rock cut shall be rounded above the rock the same as earth slopes. Where the depth of cut is insufficient to provide the full rounding required, the distance for rounding shall be proportionately adjusted.

C. Slopes rounding and warping shall also apply to all drainage ditches when such rounding will improve the appearance of the roadside.

D. Whenever the treatment of the slopes may destroy or injure standing timber, trees or other vegetation, which should be preserved, adjustments in slope grading will be made. These adjustments shall be effected by a gradual transition from the theoretical grading section required.

E. The degree of smoothness required in rounding and warping slopes shall be as specified in Subsection 312300.3.6, “Slopes”.

END OF SECTION

SECTION 312300 - EXCAVATION AND FILL

PART 1 - GENERAL

1.1 SUMMARY

A. This Work shall consist of grading and excavating the roadway, excavating borrow pits, removing slide material, and excavating ditches and stream channels and satisfactorily disposing of all excavated material and all Work necessary for the construction and completion of cuts, embankments, slopes, ditches, dikes, stream channels, approaches, parking areas, intersecting driveways and highways, and subsidiary Work. Exceptions are slope rounding, structure excavation, or other separately designated pay items of work which are made a part of the contract. All Work shall be in conformity with the alignment, grades, and cross-sections shown on the plans or established by the Engineer. Testing requirements for this section are contained in Subsection 312300.3.21, Testing.

1.2 RELATED DOCUMENTS

A. Drawings and general provisions of the Contract apply to work of this section, and unless otherwise indicated:
   1. Maricopa Association of Governments Uniform Standard Specifications for Public Works Construction, Part 200 - Earthwork, 2025 Revision to the 2020 Edition, if more stringent than herein specified
   2. Arizona Department of Transportation 2021 Standard Specifications for Road and Bridge Construction, Division II for all work performed within the Arizona Department of Transportation State Route 73 right-of-way

1.3 GRADE TOLERANCE

A. Immediately prior to placing subsequent layers of material thereon, the grading plane shall conform to one of the following:
   1. The subgrade shall not vary more than 0.10 feet (30 mm) above or below the grade established by the Engineer.
   2. The final subgrade layer prior to application of the structural base shall not vary more than 0.05 feet (15 mm) above or below the grade.

PART 2 - MATERIALS

2.1 ROADWAY EXCAVATION

A. Roadway excavation shall consist of all excavation involved in grading and constructing the roadway and appurtenances, irrespective of the nature or type of material encountered; except excavation designated as structure excavation, drainage excavation, channel, and borrow excavation when these items are provided as items of Work under the Contract. Dividing the project into construction stages shall not be construed as separate material classifications.

2.2 DRAINAGE EXCAVATION

A. Drainage excavation shall include all excavation in the construction of open ditches less than 12 feet (3.7 meters) in bottom width, excepting ditches that are part of the roadway prism as shown in the plans. The nature or type of material encountered shall have no bearing on the classification of material.

2.3 CHANNEL EXCAVATION

A. Channel excavation shall include all excavation in the construction of open ditches or stream channels with a bottom width of 12 feet (3.7 meters) or more with the exception of ditches that are part of the roadway prism as shown in the plans. The nature or type of material encountered shall have no bearing on the classification of material.

2.4 BORROW

A. Borrow shall consist of approved material excavated and used in the construction of fills, or for other construction purposes. Borrow shall be material which is excavated from sources specified in the Special Provisions or designated by the Engineer. The source of material to be excavated shall be approved in advance by the Engineer. Borrow shall be excavated to the lines and grades established by the Engineer.

B. The Contractor shall notify the Engineer sufficiently in advance of opening any borrow site; testing the material and establishing cross-section elevations and measurements of the ground surface shall be completed at the expense of the Contractor. The widening of roadway cuts shall be considered as roadway excavation and not as borrow, unless otherwise specified. Borrow excavation will not be classified according to type or character of material encountered in the borrow area unless otherwise required in the Special Provisions.

2.5 SELECTED BORROW

A. Selected borrow shall consist of approved material required for the construction of embankments within the required limits shown on the plans or directed by the Engineer and shall be obtained from approved sources.

B. Selected borrow shall conform to the requirements set forth in the Special Provisions.

PART 3 - EXECUTION

3.1 ROADWAY

A. All excavation shall be made true to lines and grades staked by parties under the supervision of an Arizona licensed professional land surveyor working for the Contractor and shall be so conducted as to avoid removing or loosening any material outside the required slopes. If any material is so disturbed, it shall be replaced and thoroughly compacted to the required cross-section, unless such replacement is impractical as determined by the Engineer.

B. The Work done under this section shall begin at some definite point or points on the project subject to the approval of the Engineer, and the Work shall progress toward completion in an orderly manner. The roadway shall be graded to full cross-section width before placing base or surfacing of any type, unless otherwise specified.

C. Intersecting roads, service highways, ramps, approaches, and driveways shall be graded as shown on the plans or established by the Engineer.

D. All suitable material removed from the excavation shall be used as far as practicable in the formation of embankments, subgrade, shoulders, slopes, dikes, and backfill for structures, unless otherwise indicated on the plans or disposed of in a manner satisfactory to the Engineer. Excavated material shall not be wasted without permission.

3.2 UNSUITABLE MATERIAL

A. Unsuitable material shall be defined as soil or organic matter not suitable for foundation material regardless of moisture content. Material that is unsuitable for planned use, including material below the natural ground surface in embankment areas, shall be excavated and disposed of in a manner approved by the Engineer or as specified in the contract documents.

B. When unsuitable material is removed and disposed of, the resulting space shall be filled with material suitable for the planned use. Such suitable material shall be placed and compacted in layers as hereinafter specified under embankment.

3.3 BLASTING

A. Any material outside the authorized cross-section on the back slopes, which may be shattered or loosened because of blasting, shall be removed by the Contractor at his expense. Shattered or loosened material below the bottom limits of required excavation shall be uniformly distributed and compacted or otherwise disposed of in a manner satisfactory to the Engineer. The Contractor shall discontinue any method of blasting which leads to overshooting or is dangerous to the public or destructive to property or to natural features.

3.4 ROCK CUTS

A. In excavating side hill rock cuts and rock cliffs, the Contractor shall exercise care and use precautionary methods so as not to break down, loosen, or otherwise damage supporting rock below the bottom limits of required excavation. In general, such cuts shall be worked from the top of lifts of such height that will not damage the bench of rock below the bottom limits of required excavation. The Contractor shall be responsible for the methods used, and for any damage to the roadbed resulting from his operations.

B. The slope of all rock cuts shall be scaled and dressed to a safe, stable condition by removing all loose spalls and rock not firmly keyed to the rock slope. Overhanging rock shall be removed when, in the opinion of the Engineer, it may be a hazard to public use of the roadway.

C. In solid rock excavation, slopes shall be constructed to the approximate neat lines staked by the Surveyor. No rock shall project or overhang more than 1 foot (0.3 m) from the true slope.

3.5 OVERBREAK

A. Overbreak is that portion of material excavated, displaced or loosened outside and beyond the slopes or grade as staked or re-established, regardless of whether any such overbreak is due to blasting, the inherent character of any formation encountered, or to any other cause. Slides and slip-outs as defined in Subsection 312300.3.10, "Slides and Slip-outs," and that portion of rock subgrade as hereinafter set forth, shall not be considered overbreak. All side slope overbreak as so defined shall be removed by the Contractor and shall be disposed of in the same manner as provided for the surplus under the heading of "Surplus Material," but at his own expense and without any allowance for overhaul.

3.6 SLOPES

A. All excavation and embankment slopes, except in solid rock, shall be trimmed to the lines staked by the Surveyor. The degree of smoothness shall be that normally obtained by hand shovel operations, or blade grader operations.

3.7 WIDENING CUTS

A. If the Engineer directs the Contractor to excavate beyond the limits of the typical cross-section originally proposed and within the limits of the right-of-way, the Contractor shall do so.

3.8 SURPLUS MATERIAL

A. Unless otherwise specified in the Contract Documents, surplus excavated material shall be used to widen embankments uniformly, or to flatten slopes, or at other locations, all in a manner satisfactory to the Engineer. No surplus material shall be disposed of above the grade of the adjacent roadbed, nor shall the Contractor waste any material unless approved in writing by the Engineer.

B. If the quantity of surplus material is specified in the Contract Documents, such quantity shall be considered approximate only. The Contractor shall satisfy himself that there is sufficient material available for the completion of the embankments within the areas involved before disposing of any indicated surplus material inside or outside the right-of-way. Any shortage of material caused by premature disposal of the indicated surplus material by the Contractor shall be replaced by him and no compensation will be allowed the Contractor for such replacement.

3.9 SELECTED MATERIAL

A. When specified in the Contract Documents, or when selected by the Engineer, suitable selected material encountered in excavating or widening the roadway prism or any other excavation within the highway right-of-way, or in the excavation or borrow, shall be used for finishing the top portion of the subgrade.

B. Selected material shall be defined as material which is excavated from one or more of the above sources and which is used for selective purposes.

C. When practicable, selected material shall be hauled directly from excavation to its final position on the roadbed and compacted in place, and such Work shall be paid for at the contract unit price for the excavation item involved.

D. When the transporting of selected material directly from excavation to its final position on the roadway is impractical, the selected material shall be left in place until it can be placed in final position and no additional compensation will be made because of the delayed excavation. If, however, the conditions are such that the undisturbed selected material will hamper ordinary grading operations or cause unnecessary movements of equipment, the Engineer may order in writing the removal of sufficient selected materials and the stockpiling thereof to enable practical hauling operations. If the excavation and stockpiling of selected material is specified in the contract documents or is ordered by the Engineer, the excavation shall be from, and the stockpiling at, locations designated by the Engineer. The selected material shall be removed from the stockpile and placed in final position on the roadbed when approved by the Engineer.

3.10 SLIDES AND SLIPOUTS

A. Material outside the planned roadway or ditch slopes which is unstable and constitutes potential slides in the opinion of the Engineer, material from slides which has come into the roadway or ditch, and material which has slipped out of new or old embankments shall be excavated and removed. The material shall be excavated to designated lines or slopes either by benching or in such manner as approved by the Engineer. Such material shall be used in the construction of the embankments or disposed of as approved by the Engineer.

B. The above provisions shall not be so construed as to relieve the Contractor from the duty of maintaining all slopes true and smooth. Erosion, regardless of amount or extent, caused by the action of the elements, which results in damage to Work or materials, shall in no case be considered a slide or slip-out.

3.11 DRAINAGE

A. During construction of the roadway, the roadbed shall be maintained in such condition that it will be well drained at all times.

B. V-type ditches shall be formed to the cross-section and dimensions on the plans by means of suitable equipment which will deposit all loose material on the downhill side so that the bottom of the finished ditches shall not be less than 2.5 feet (.75 meters) below the crest of the loose material piled on the downhill side.

C. In going from cut to fill, the roadway ditches shall be so cut as to avoid damage to embankments by erosion.

D. The flat-bottom ditches indicated on the plans shall be excavated to the required cross-section and grade. Materials so obtained shall be used to construct roadway embankments or dikes or both, to form a continuous diversion channel as staked by the Surveyor.

3.12 CHANNELS

A. To avoid destruction of natural growth during construction of ditches, channels, or dikes, travel of equipment shall be confined to the construction limits. Where ditches, channels or dikes are nearly parallel to the roadway, turnarounds shall not be located closer than 200 feet (60 meters) apart.

B. Fine grading of channel bottoms will not be required unless paving is specified.

3.13 BORROW

A. A possible source of borrow material may be indicated in the contract documents. If the Contractor desires to use borrow materials from sources other than those described in the contract documents, he shall, at his own expense, acquire the necessary right to take materials and pay all costs involved. All costs of exploring such alternate sources shall be borne by the Contractor. Use of material from these sources will not be permitted until approved in writing by the Engineer.

B. The successful bidder shall, at the time of execution of the contract, execute an "Agreement" for all borrow deposits obtained under an "Option and Agreement for Sale of Materials" when said "Option" is contained in the Special Provisions. This agreement shall be executed whether the material is to be used or not.

C. In case designated borrow deposits fail to contain the necessary quantity of acceptable material, the Contractor shall immediately notify the Engineer in writing. The Engineer shall thereupon investigate, and if his investigation shows that there is not sufficient quantity of acceptable material, he shall designate an alternate deposit in which to obtain the deficit.

D. In all borrow pits having undesirable material, including overburden, refuse, organic and deleterious substances, the material shall be removed and wasted or redistributed, in a manner satisfactory to the Engineer. All costs incurred therefore, shall be considered as incidental and subsidiary to the borrow.

E. Borrow shall not be obtained until all other excavation items are complete to the extent necessary to determine the need for borrow.

F. The Contractor shall notify the Engineer sufficiently in advance of opening any borrow areas so that cross-section elevations and measurements of the ground surface after stripping may be taken, and the borrow materials can be tested before being used. Sufficient time for testing the borrow shall be allowed.

G. Borrow deposits shall be excavated to regular lines as staked to permit accurate measurement. The dimensions of the borrow deposit will be designated and the Contractor shall not excavate below the depth or outside limits given, except with prior approval. The depth of excavation throughout the area of the borrow pits shall be as uniform as practicable. Unless otherwise permitted, borrow pits shall be excavated so that they will drain to the nearest natural outlet.

H. All materials which are not satisfactory for use for the purposes intended shall be rejected at the pit and disposed of in a manner satisfactory to the Engineer.

I. If the Contractor excavates more material than is required, the excess will not be measured for payment.

J. All work and materials required to build and maintain borrow haul roads and obliteration of haul roads shall be considered subsidiary to the "borrow" item and no further compensation will be allowed therefore.

3.14 FOUNDATION

A. When embankment is to be placed and compacted on hillsides, or when new embankment is to be compacted against existing embankments, or when embankment is to be built one half width at a time, the slopes that are steeper than 4:1, when measured at right angles to the roadway, shall be continuously benched as the work is brought up in layers. Benching shall be of sufficient width to permit operations of placing and compacting equipment. Each horizontal cut shall begin at the intersection of the original ground and the vertical sides of the previous cuts. Material thus cut out shall be re-compacted along with the new embankment material at the Contractor's expense, unless the width of excavation required by the Engineer exceeds 6 feet (1.8 meters), in which case the excavated material in excess of 6 feet (1.8 meters) will be measured and paid for as roadway excavation.

B. All foundations for embankment shall be cleared and grubbed.

C. Unsuitable material shall be removed and disposed of.

D. Where 1 foot (0.3 m) or less of embankment is placed over existing bituminous surface, such surface shall be removed and incorporated in the embankment or otherwise disposed of as approved by the Engineer. Where more than 1 foot (0.3 m) of embankment is placed over existing bituminous surface, such surface shall be left undisturbed.

3.15 EMBANKMENT MATERIALS

A. Embankments shall be constructed with suitable materials, excavated as prescribed and with any excess materials from other operations which are acceptable and suitable for use.

B. All materials used in embankment shall be free from objectionable material such as leaves, grass, roots, logs, stumps, brush, or other perishable material.

C. When there is a choice of material, the excavation shall be made so the best material will be placed on top of the embankment for at least 1 foot (0.3 m) in depth. This paragraph shall not be interpreted as to require the Contractor to stockpile and subsequently rehandle embankment materials except as provided in Subsection 312300.3.9, "Selected Material."

D. Material shall not be placed in the embankment when either the material, foundation or the embankment on which it would be placed is frozen.

E. Where embankments are to be made of material from rock cuts or other material which is unsuitable for finishing the roadbed, the upper 6 inches (15 cm) of the roadbed shall be formed of approved material.

3.16 PLACING EMBANKMENT

A. For embankment or backfill deposited against structures, attention is directed to Subsection 312323.13.3.2, "Placing and Compacting at Abutments, Piers, Wingwalls, and Retaining Walls."

B. Where structure abutments are placed on embankment, the embankment shall be constructed to subgrade elevation prior to excavating for the construction of the abutment. Where the abutment is supported on piles, the embankment shall be constructed to the elevation of the bottom of the footing.

C. Where a structure is to be covered by a rockfill, it shall be covered with not less than 2 feet (0.6 meters) of satisfactory soil or granular materials before the rock embankment is placed over the structure.

D. Embankments shall, except as hereinafter specified, be constructed in layers. The construction of embankments shall begin at the lowest point of the fill below the grade or the bottom of ravines. Individual layers shall be spread evenly to uniform thickness throughout and parallel with the finished grade for the full width of the embankment, unless otherwise permitted. The thickness of the layer shall be as necessary to secure the required compaction with a 6-inch (15 cm) maximum thickness after compaction. However, for non-structural portions of embankments, 1-foot (0.3 m) compacted thickness for one lift of fill placement may be used where the contractor utilizes equipment and methods sufficient to meet the minimum compaction requirements. Excepted provisions are hereinafter outlined for placing in marsh and placement of rock. Hauling equipment shall be routed to obtain uniform compaction and channelization of haul routes and rutting of the fill shall be avoided.

E. When embankments are constructed across wet or swampy ground which will not support the weight of heavy hauling and spreading equipment, the Contractor will be expected to choose such methods of embankment construction and to use such hauling and spreading equipment as will least disturb the soft foundation. When soft foundations are encountered, and when approved by the Engineer, the lower part of the fill may be constructed by dumping and spreading successive vehicle loads in a uniformly distributed layer of a thickness not greater than that necessary to support the vehicle while placing subsequent layers, after which the remainder of the embankment shall be constructed in layers and compacted as specified.

F. It is not the policy of the Contracting Agency to allow an increase in the planned depth of embankment material over soft, wet, or swampy ground for the sole purpose of providing support for heavy hauling and spreading equipment, unless the Contractor proves to the satisfaction of the Engineer that the planned depth is inadequate to support light hauling vehicles. If it proves necessary for the Contractor to use smaller hauling vehicles or different methods of embankment construction than he had originally contemplated in order to comply with the foregoing, such shall not be the basis for a claim for extra compensation against the Contracting Agency. The unit contract price for the various pay items involved shall be full compensation for all labor, materials and equipment necessary to perform the work as outlined herein.

G. Embankment which, in the opinion of the Engineer, contains enough rock larger than 4 inches (10 cm) to make it impractical to place and compact in 1-foot (0.3 m) lifts shall be considered as "Rock Embankment." The materials shall be spread in a uniform horizontal layer over the full width of the embankment. The layer thickness shall not exceed 1-1/3 times the vertical dimension of maximum size material larger than 8 inches (20 cm). The largest size rock allowed in the embankment will be 3 feet (1 meter) measured in vertical direction and rocks larger than this shall be broken up before being placed in the embankment. Rock to be wasted may exceed 3 feet (1 meter) and be disposed of in an inconspicuous manner approved by the Engineer.

H. In rock fills where end dumping is employed, direct end dumping upon the previously constructed layer of embankment will not be permitted. Rock shall be dumped on the layer of embankment being constructed and dozed ahead into place. Care shall be exercised to work the fines and smaller rock into the spaces between the larger rock. Compaction will be required as provided in Subsection 312300.3.18, "Compaction, Rock Embankment."

I. To the extent of project requirements for embankments, all rock from excavation shall be used for embankment. The Contractor shall plan his grading operation to use rock which may be encountered in excavation in accordance with the following provisions:
   1. Rock, in general, shall be placed so as to form the base of embankment for the full width of the cross-section; on the side slope or slopes of a new embankment being placed; on the side slope or slopes of an embankment already in place requiring widening or where excess rock may be wasted; or on the side slopes and top of rolled embankment made of embankment materials other than rock.
   2. The Contractor shall not place large rock in embankments where piles will be driven. The Contractor shall be responsible for penetrating the embankment with specified piles.

3. When rock and other embankment materials are excavated at approximately the same time, the rock shall be distributed throughout the fill and not nested in one location.
4. When there is insufficient material other than rock in the excavation to permit properly compacted layers, the rock shall be placed for the full cross-section width with the larger rocks well distributed and the void spaces filled with the smaller rocks and fragments.
5. When shown on the Plans or considered necessary by the Engineer, embankments shall be built to such elevation above required grade to allow for settlement, or sufficient surcharge shall be placed above the required elevation of earth grade over deposits of unstable material to secure displacement or settlement. Surcharge shall be removed only after the fill has reached stability or the required settlement time has been reached.

3.17 COMPACTION, DIRT EMBANKMENT

A. Optimum moisture content of the various soils will be determined or approved by the Engineer. At the time of compaction, the moisture content of the various soils shall be within the following ranges:

Optimum Moisture Content	Tolerances
0% - 20%	+2% to -4%
20% - 30%	+2% to -5%
31% or more	+3% to -6%

B. When necessary, each layer, before being compacted, shall be processed as required in order to bring its moisture content within the prescribed limits. The material shall be wetted by the application of water or dried as necessary and either process may be carried out either on the embankment or at the source of the material or otherwise as approved by the Engineer. Full compensation of any work involved in wetting or drying embankment material to obtain the required moisture content shall be considered as included in the contract unit price bid for excavating or furnishing the material and no additional compensation will be allowed therefore.

C. Hauling and leveling equipment shall be routed and distributed full width over each layer of the fill in such a manner as to uniformly distribute the compaction afforded thereby. In addition to hauling and leveling equipment, the Contractor shall provide compaction equipment that is specifically designed and manufactured for the purpose of compacting dirt embankments. Said compaction equipment shall work continuously with the grading equipment.

D. The top 8 inches (20 cm) of the base of cuts and natural ground having less than 5 feet (1.5 meters) of embankment, measured from the subgrade, and all embankment material, shall be compacted to not less than 95% relative compaction. When natural ground material is encountered that cannot be compacted to the required density, compaction requirements shall be determined by the Engineer.

E. All selected borrow and structure backfill placed within the limits of embankment shown on the plans for approaches to bridges shall be compacted to not less than 95% relative compaction.

F. It is to be expected that a loss of density in the upper portion of earth subgrade may occur due to the elements, or for lapse of time, or for other reasons. Recompaction to the specified density will be required prior to placement of any subsequent course and no additional compensation will be allowed therefore.

3.18 COMPACTION, ROCK EMBANKMENT

A. Field density tests will not be required on rock embankments. In lieu thereof, the required compaction shall be tested by proof rolling. In this case, compaction shall be attained and tested by using construction methods and equipment as follows:

1. Methods. The material for the embankment shall be deposited, spread and leveled the full width of the embankment, and the layer of thickness may be 1-1/3 times the vertical dimension of maximum size material. The maximum size rock shall not exceed 3 feet (1 meter).

   Hauling and leveling equipment shall be routed and distributed over each layer of the fill in such a manner as to make use of the compaction afforded thereby. Rollers, vibrators, or compactors shall compact the embankment full width with a minimum of three complete passes for each layer of embankment. The compacting equipment shall not exceed a speed of 5 miles (8 kilometers) per hour and shall work continuously with the grading equipment.

   Rolling shall be done in a longitudinal direction along the embankment and shall generally begin at the outer edges and progress toward the center. The travel paths of traffic and construction equipment shall be kept dispersed over the entire width of the embankment so as to aid in obtaining uniform compaction. Weights of equipment used in making embankments over soil having an excessive moisture content may be limited, if, in the judgment of the Engineer, such limitations are necessary in order to maintain the fill in a satisfactory condition.

   Water shall be applied to the embankment in the amount necessary to obtain the required compaction.

2. Equipment. Compaction equipment shall be adequately designed to obtain compaction requirements without adverse shoving, rutting, displacement, or loosening and shall meet the requirements hereinafter specified. Rollers shall have displayed thereon in permanent legible characters, the manufacturer's guaranteed net operating weights as distributed on each axle.

   The proof roller shall be a pneumatic-tired roller or pneumatic-tired compactor weighing not less than 50 tons (45 metric tons), and capable of applying to the ground loads of not less than 25,000 pounds (11,300 kilograms) per wheel. All tires shall be of equal size and diameter and shall be capable of operating at an air pressure of at least 90 pounds per square inch (620 KPa). They shall be kept uniformly inflated so that the difference in pressure in any two tires shall never exceed 5 pounds per square inch (0.35 kilograms per square centimeter) and means shall be provided by the Contractor for checking the tire pressure on the job at any time.

3. Tests. Subsequent layers shall not be placed until the previous layer of the embankment is compacted to the degree that no further appreciable deflection is evidenced under the action of proof rolling equipment, as determined by the Engineer.

   Rolling and proof rolling may be deleted on any layer or portion thereof when, in the judgment of the Engineer, accomplishment is physically impractical.

   Payment for rolling and proof rolling or for the correction of any subgrade weakness or deficiencies disclosed by the proof rolling operation shall be considered subsidiary to the price bid for the "Excavation" item.

3.19 MAINTENANCE

A. Embankment material which may be lost or displaced as a result of natural settlement of the ground or foundation upon which the embankment is constructed shall be replaced by the Contractor with acceptable material from excavation or borrow, etc. The quantity of material required will be paid for at the regular contract price for the type of material used, and no additional compensation will be allowed therefore.

B. The Contractor shall, at his expense, remove and replace with acceptable material any embankment or portion thereof which has been constructed with unapproved material as well as remove and replace portions of the embankment which may become unstable or displaced as the result of carelessness or negligence on his part.

3.20 SUBGRADE TOLERANCE

A. Subgrade upon which pavement, sidewalk, curb and gutter, driveways, or other structures are to be directly placed shall not vary more than ¼-inch (6 mm) below or above the specified grade and cross-section. Subgrade upon which sub-base or base material is to be placed shall meet the tolerances as specified in Subsection 312300.1.3, "Grade Tolerance." Variations within the above specified tolerances shall be compensating so that the average grade and cross-section specified are met.

3.21 TESTING

Spec. Section	Description	Test	Reference Specification And/Or Test Procedure	Recommended Frequency
2.1	Roadway Excavation (Subgrade)	Field Density	AASHTO T310	1/5000 SF
2.2	Drainage Excavation (Subgrade)	Field Density	AASHTO T310	1/5000 SF
2.3	Channel Excavation (Subgrade)	Field Density	AASHTO T310	1/5000 SF
2.4 2.5	Borrow Selected Borrow	Sieve Analysis	AASHTO T11 & T27 (RTC 301 & Special Provisions)	1/Type

		Liquid Limit & Plasticity Index	AASHTO T89 & T90 (RTC 301 & Special Provisions)	1/Type
		R-Value	AASHTO T190	1/Type
3.1	Roadway (Subgrade)	Field Density	AASHTO T310	1/5000 SF
3.9	Selected Material	Sieve Analysis	AASHTO T11 & T27 (RTC 301 & Special Provisions)	1/5000 SF
		Plasticity Index	AASHTO T89 & T90 (RTC 301 & Special Provisions)	1/5000 SF
		R-Value	AASHTO T190	1/Type
		Field Density	AASHTO T310	1/5000 SF
3.14	Foundation (Subgrade)	Field Density	AASHTO T310	1/5000 SF/Lift
3.17	Embankment	Field Density Fill	AASHTO T310	1/5000 SF/Lift
		Field Density Subgrade	AASHZTO T310	1/5000 SF/Lift
		Field Density Structures	AASHTO T310	If Riding Equipment Used: 1/5000 SF/Lift Per Structure. If Walk Behind Equipment Used: 1/1000 SF/Lift Per Structure/Per Day.
3.18	Rock Embankment	Visual	Issue Inspection Report	Full Time

NOTE: A maximum testable lift is defined as a 12-inch (30 centimeter) layer of compacted material.

END OF SECTION

SECTION 312316.16 - STRUCTURAL EXCAVATION FOR MINOR STRUCTURES

PART 1 - GENERAL

1.1 SUMMARY

A. This Work shall consist of the removal of all material of whatever nature encountered in the construction of foundations for bridges, retaining walls, headwalls for culverts and other structures; the excavation of trenches for pipe culverts, box culverts, cut-off walls for slope paving and concrete aprons, footings for riprap and other excavation specifically designated on the plans, in these specifications or in the Special Provisions as structure excavation, which shall include the work of disposing of surplus material and cleaning up the sites. Structure excavation shall include dewatering and the furnishing of all equipment and the construction or installation of all building foundation work, cofferdams, cribs, and other facilities which may be necessary to perform the excavations and the subsequent removal of such facilities except where they are required or permitted by the plans or specifications to remain in place. It shall also include all the necessary clearing and grubbing within the proposed structure area and removing old structures or parts thereof as required if the proposal does not include separate bid items for such Work. Testing requirements for this section are contained in Subsection 312316.16.3.3, Testing.

B. For separate requirements pertaining to the excavation involved in the installation of pipe culverts and underground piping, attention is directed to those sections of these specifications governing such Work.

1.2 RELATED DOCUMENTS

A. Drawings and general provisions of the Contract apply to work of this section, and unless otherwise indicated:
   1. Maricopa Association of Governments Uniform Standard Specifications for Public Works Construction, Part 200 - Earthwork, 2025 Revision to the 2020 Edition, if more stringent than herein specified.
   2. Arizona Department of Transportation 2021 Standard Specifications for Road and Bridge Construction, Division II for all work performed within the Arizona Department of Transportation State Route 73 right-of-way

1.3 CLASSIFICATION

A. Classification of structure excavation will not be made on the basis of materials or conditions encountered. Classification of excavation, if made, will be on the basis of the material removed between certain elevations, and such classification as shown on the plans or set forth in the Special Provisions shall not be changed regardless of the material encountered.

PART 2 - MATERIALS – NOT USED

PART 3 - EXECUTION

3.1 GENERAL

A. The Contractor shall notify the Engineer a sufficient time in advance of the beginning of excavation for structures, so elevations and measurements may be taken of the existing ground before it is disturbed and of existing substructure units within the limits of excavation for structures before they are removed at the expense of the Contractor. Any material excavated or removed before these measurements have been taken will not be paid for.

B. The excavated area shall conform to the outlines of the footings, as shown on the plans, and shall be of sufficient size to permit placing of the full width and length of the footings shown. The elevation of the bottoms of footings as shown on the plans shall be considered as approximately only, and the Engineer may order, in writing, such changes in dimensions or elevation of footings as may be necessary to secure a satisfactory foundation.

C. Unless otherwise permitted by the Engineer, foundations shall be compacted to not less than ninety percent (90%) relative compaction for culvert pipe and not less than ninety-five percent (95%) relative compaction for structures. For fine-grained soils, the relative compaction may not be less than ninety percent (90%) for structures if approved by the entity engineer. Test method to be determined by the Engineer.

D. All rock or other hard foundation material shall be freed from all loose material, cleaned and cut to a firm surface, either level, stepped or serrated, as may be permitted by the Engineer. All seams and crevices shall be cleaned out and filled with concrete mortar or grout.

E. Where masonry is to rest on material other than rock or boulders, special care must be given not to destroy its bearing value.

F. Should the Contractor remove structure excavation below grade, he shall backfill to the required elevation at his own expense with backfill in a manner satisfactory to the Engineer.

G. Wet pits shall be dewatered for inspection and for construction of foundations unless otherwise provided.

H. Excavated material which is suitable for backfilling shall be so utilized or used in embankments, in a manner satisfactory to the Engineer. Surplus or unsuitable material shall be disposed of so as to cause no obstruction to flow of streams; or otherwise impair the efficiency or appearance of the structure. It shall be disposed of in such a manner as to prevent damage to property or the creation of unsightly conditions, and shall not be placed where it will interfere with the operation of drains or impair the roadway ditches, etc.

3.2 INSPECTION

A. After each excavation is completed, the Contractor shall notify the Engineer, and no masonry shall be placed until the Engineer has approved the depth of excavation and the character of the foundation material.

3.3 TESTING

Spec. Section	Description	Test	Reference Specification And/Or Test Procedure	Recommended Frequency
312316.3.1	Structure Excavation	Field Density	AASHTO T310	If Riding Equipment Used:1/5000 SF/Lift Per Structure
				If Walk Behind Equipment Used: 1/1000 SF/Lift Per Structure/Per Day

NOTE: A maximum testable lift is defined as a 12-inch (300 millimeter) layer of compacted material.

END OF SECTION

SECTION 312323.13 - BACKFILL

PART 1 - GENERAL

1.1 SUMMARY

A. This work shall consist of placing and compacting, to the lines designated on the plans or as established by the Engineer, backfill material in excavations for buildings, bridges, retaining walls, headwalls for culverts, and other structures; placing and compacting backfill material for box culverts and other culverts; and other backfill specifically designated in the contract documents as structure backfill. This item does not include backfilling pipes within a trench or minor miscellaneous structure excavations outside the limits of the roadway. Testing requirements for this Section are contained in Subsection 312323.13.3.5, “Testing.”

1.2 RELATED DOCUMENTS

A. Drawings and general provisions of the Contract apply to work of this section, and unless otherwise indicated:
   1. Maricopa Association of Governments Uniform Standard Specifications for Public Works Construction, Part 200 - Earthwork, 2025 Revision to the 2020 Edition, if more stringent than herein specified.
   2. Arizona Department of Transportation 2021 Standard Specifications for Road and Bridge Construction, Division II for all work performed within the Arizona Department of Transportation State Route 73 right-of-way

PART 2 - MATERIALS

2.1 SELECTED BACKFILL

A. Selected backfill shall be of a quality acceptable to the Engineer and may consist of suitable material from excavation. It shall be free from sod, frozen earth, organic materials, rubbish, or debris. The backfill material shall have a sufficient amount of fine material to fill the voids between the coarser aggregate. In addition thereto, the material shall conform to the following requirements:

Sieve Sizes	**Percentage of Weight Passing**
6"	100
3"	80-100
No. 4	35-100

Percentage by Weight Passing No. 200 Sieve	**Plasticity Index Maximum**
0-10.0	15
10.1-20.0	12
20.1-50.0	10
50.1-80.0	8
80.1-100.0	6

B. The liquid limit of the material shall not exceed fifty percent (50%) maximum.

C. Stones or lumps exceeding 3 inches (75 mm) shall not be used within the zones 12 inches (300 mm) or less from the structure, 12 inches (300 mm) or less from the finish subgrade in unpaved areas, or 16 inches (400 mm) or less below the pavement in paved areas.

D. Acceptable material from excavation "Selected Backfill" may be used for structure backfilling unless "Granular Backfill" is specified.

2.2 GRANULAR BACKFILL

A. Granular backfill shall consist of natural sand or a mixture of sand with gravel. Broken Portland cement concrete and bituminous type pavement will be permitted, subject to the gradation limits specified herein. The granular backfill material shall have a sufficient amount of fine material to fill the voids between the coarser aggregate.

B. In addition thereto, the material shall conform to the following requirements:

Sieve Sizes	Percentage of Weight Passing
3"	100
No. 4	35-100
No. 16	25-100
No. 200	5-15

C. The soluble sulfate content of the material shall not exceed three-tenths percent (0.3%) by dry soil weight.

PART 3 - EXECUTION

3.1 GENERAL

A. Compaction of backfill or embankment around all structures shall be secured with mechanical tamping units and the material shall be placed in layers of thickness compatible with the characteristics of the backfill and the type of equipment being used subject to approval by the Engineer.

B. Unless otherwise permitted by the Engineer, foundation materials for structures shall be compacted to not less than ninety five percent (95%) of the maximum density. For fine-grained soils, the relative compaction may not be less than ninety percent (90%) for structures if approved by the entity engineer.

C. Backfill material shall be placed in uniform horizontal layers and shall be brought up uniformly on all sides of the structure or improvement. Each layer of backfill shall be moistened as necessary and thoroughly compacted until ninety five percent (95%) of the maximum density is achieved. Test method shall be as specified in Subsection 312323.13.3.5, “Testing.”

D. Compaction of structure backfill by jetting shall not be permitted unless recommended by the Engineer.

E. The upper 16 inches (400 mm) below finish grade shall be compacted by mechanical means only.

F. Backfill material to be used around buried structures where water is present or anticipated to be present shall be carefully selected so that it will protect the surrounding soil from infiltrating into the backfill as determined by the Engineer. This select material shall serve as a filter material. If the drain material is to remove an appreciable quantity of water, graded filter drains using separate fine-grained layers for filters and coarse-grained layers to conduct the water may be required. As an alternate to using a filter material, a filter fabric may be placed between the backfill material and surrounding soil.

G. Material resulting from structure excavation and not used as structure backfill shall be deposited in roadway embankments in accordance with the requirements specified elsewhere or otherwise disposed of in a manner approved by the Engineer and no additional compensation will be allowed for such work.

H. Structure backfill shall not be placed until the structure or facilities have been inspected by the Engineer and approved for backfilling. Backfill material shall not be deposited against the back of concrete abutments, concrete retaining walls or the outside walls of concrete box culverts until the concrete has reached an age of twenty-eight (28) days or the concrete has developed 100 percent of the design strength in compression as determined by Test Method AASHTO T22 using cylinders cured per Test Method AASHTO T23 and/or T126.

I. Where backfill is placed against waterproofed surfaces, care shall be taken that no damage is done to the waterproofing material.

3.2 PLACING AND COMPACTING AT ABUTMENTS, PIERS, WINGWALLS AND RETAINING WALLS

A. With the approval of the Engineer, all spaces excavated and not occupied by abutments, piers, or other permanent work shall be refilled with earth up to the surface of the surrounding ground or to the limits designated on the plans or as described herein. All backfill shall be thoroughly compacted in accordance with the provisions set forth in Subsection 312323.13.3.1, "General."

B. Where backfill is to be placed on one side of an abutment, wingwall, pier, or headwall, care shall be exercised to prevent displacement of line, or batter, or both.

C. Existing slopes which are shaped so as to cause wedge action in the backfill, shall be step-cut or benched before backfilling.

3.3 PLACING AND COMPACTING AT CULVERTS

A. After the bedding has been prepared and the culverts installed or constructed as required by the pertinent specifications, "Selected Backfill" or "Granular Backfill" shall be placed along both sides of the culvert equally in uniform layers such that the elevation of the top of the backfill on either side of the culvert does not exceed the elevation of the top of the backfill on the other side of the culvert by more than 6 inches (150 mm). The thickness of each layer shall be compatible with the characteristics of the backfill and the type of equipment being used, but shall not exceed 12 inches (300 mm) in depth after compaction. Each layer shall be wetted as required and thoroughly compacted to the density requirements as set forth in Subsection 312323.13.3.1, "General." Jetting or ponding methods of compaction will not be permitted for backfilling around corrugated metal pipe culverts or thermoplastic pipe.

B. Special care shall be taken in placing and thoroughly compacting the material under the haunches of all pipe culverts.

C. Unless otherwise directed, the backfilling shall continue as directed to the level of the ground or to an elevation 6 inches (150 mm) above the structure in the case of a pipe culvert in projection, or even with the top of the structure in the case of reinforced concrete box culvert in projection.

D. No construction equipment or other traffic shall be permitted to cross any culvert until a safe minimum depth of fill above the culvert has been placed and compacted in accordance with these specifications. The Contractor shall be solely responsible for protecting the structure from superimposed loading by construction equipment and shall repair any damage to the structure or replace the structure as ordered without extra compensation.

E. Special care shall be taken in backfilling arches, particularly half-circle arches. The arch shall be covered in layers, each layer conforming to the shape of the arch and tamped thoroughly.

3.4 PLACING AND COMPACTING OF BIN-TYPE RETAINING WALLS

A. Placing and compacting backfill material for bin-type retaining walls shall progress concurrently with the assembly of the bins, and backfilling around the outer sides thereof shall be kept approximately level with the inside fills. The materials shall be thoroughly tamped and meet the density requirements as set forth in Subsection 312323.13.3.1, "General." Care shall be exercised to completely fill the depressions of stringers and spacers without displacing them from established line and batter.

3.5 TESTING

Spec. Section	Description	Test	Reference Specification And/Or Test Procedure	Recommended Frequency
312323.13.2.1	Selected Backfill	Sieve Analysis	AASHTO T11 & T27 RTC 301 & Special Provisions	1/1000 CY
		Liquid Limit & Plasticity Index	AASHTO T89 & T90 RTC 301 & Special Provisions	1/1000 CY
312323.13.2.2	Granular Backfill	Sieve Analysis	AASHTO T11 & T27 RTC 301 & Special Provisions	1/1000 CY
		Soluble Sulfates	AWWA 4500E	1/ Type
312323.13.3.1	General	Field Density	AASHTO T310	If Riding Equipment Used: 1/5000 SF/Lift
				If Walk Behind Equipment Used: 1/1000 SF/Lift Per Structure/Per Day

NOTE: A maximum testable lift is defined as a 12-inch (300 mm) layer of compacted material.

END OF SECTION

SECTION 312333 - TRENCHING AND BACKFILL

PART 1 - GENERAL

1.1 SUMMARY

A. This Work shall consist of the excavation and backfill of trenches for the accommodation of substructures including, but not limited to electrical conduits, telephone conduits, television cable, traffic signal conduits, gas lines, sewer lines, water lines, and storm drains.

B. When the terms "Backfill" or "Trench Backfill" are used herein, they shall be construed to mean one or more of the types of backfill specified below under "MATERIALS."

1.2 RELATED DOCUMENTS

A. Drawings and general provisions of the Contract apply to work of this section, and unless otherwise indicated:
   1. Section 01 of the White Mountain Apache Tribe IDIQ 2023 Modification of the 2019 PAO/SFC Technical Provisions, which have been included in the Project Documents for reference.
   2. Maricopa Association of Governments Uniform Standard Specifications for Public Works Construction, Part 200 – Earthwork, 2025 Revision to the 2020 Edition, if more stringent than herein specified.

B. Section 312300 – EXCAVATION AND FILL

C. Section 312323.13 – BACKFILL

D. Section 321123 – AGGREGATE BASE COURSES

E. Section 321216 – ASPHALT PAVING

F. Section 321313 – CONCRETE PAVING

PART 2 - MATERIALS

2.1 SELECTED BACKFILL

A. Selected backfill shall be as specified in Subsection 312323.13.2.1, "Selected Backfill."

2.2 GRANULAR BACKFILL

A. Granular backfill shall be as specified in Subsection 312323.13.2.2, "Granular Backfill."

2.3 SAND BACKFILL

A. Sand backfill shall consist of natural sand or a mixture of sand with gravel or stone. In addition thereto, the material shall conform to the following gradation requirements:

Sieve Sizes	Percentage of Weight Passing
3/8"	100
No. 4	80-100
No. 200	5-20

B. The soluble sulfate content shall not exceed 0.3% by dry weight of soil.

2.4 AGGREGATE BASE BACKFILL

A. Aggregate base backfill shall be as specified in Section 321123, "Aggregate Base Courses". The soluble sulfate content shall not exceed 0.3% by dry weight of soil.

2.5 DRAIN BACKFILL

A. Drain backfill shall be as specified in Subsection 312323.13.3.1.F The type shall be as shown on the plans or approved by the Engineer.

2.6 CONTROLLED LOW STRENGTH MATERIAL (CLSM)

A. CLSM shall conform to Technical Provision 02.12 of the White Mountain Apache Tribe IDIQ 2023 Modification of the 2019 PAO/SFC Technical Provisions, which have been included in the Project Documents for reference, where applicable.

B. CLSM shall conform to the requirements of Section 728 of Maricopa Association of Governments Uniform Standard Specifications for Public Works Construction, 2025 Revision to the 2020 Edition.

C. If the CLSM mix does not produce a flowable consistency or exhibits excessive bleeding, the mix shall be adjusted. Excessive bleeding is considered to occur when water flows from the CLSM in a manner that causes disturbance or displacement of the exposed surface of the CLSM. Mix adjustments shall include, but not be limited to: aggregate gradation, cementitious material content, admixtures, water content, or a combination of adjustments.

D. CLSM should be placed directly into the space to be filled. The mix may be placed to partial depth or full depth as conditions at the site dictate. When used as backfill in the pipe zone, care should be taken to prevent flotation or misalignment of the pipe by means of straps, soil anchors or other approved means of restraint. Material may be placed in stages to prevent movement or flotation of pipe.

E. Placement of backfill, pavement materials or on top of the CLSM shall not be allowed until the CLSM passed the ball drop test as per ASTM D6024.

2.7 CRUSHED ROCK

A. Crushed rock shall be the product from approved aggregate deposits and shall only be used as directed by the governing agency. The mineral aggregate shall be clean, hard, durable, free from any frozen lumps, deleterious matter, and harmful coatings. In addition thereto, the material shall conform to the following gradation requirements:

Sieve Sizes	Percentage of Weight Passing
3/8"	100
No. 4	20-80
No. 200	0-15

B. The percent of wear (500 revolutions) in accordance with ASTM C 131 shall not exceed 45%.

2.8 TYPE III AGGREGATE

A. The soluble sulfate content shall not exceed 0.3% by dry weight of soil. The mineral aggregate shall be clean, hard, durable, free from any frozen lumps, deleterious matter, and harmful coatings. In addition thereto, the material shall conform to the gradation requirements of aggregate base course as per Section 321123 with the following property testing:

Project Control Test	Test Method	Requirements
Sieve Analysis	AASHTO	704.03.04
Sampling Aggregate	ASTM D 75	N/A
Plasticity Index	ASTM D 4318	5 Maximum
Liquid Limit	ASTM D 4318	35% Maximum
No. 200 Sieve	AASHTO	2%-15%

PART 3 - EXECUTION

3.1 TRENCH EXCAVATION, GENERAL

A. Excavation, including the manner of supporting excavation and provisions for access to trenches, shall comply with the current regulations as determined by ADOSH. Excavation shall include, without classifications, the removal of all materials of whatever nature encountered, including all obstructions of any nature that would interfere with the proper execution and completion of the work. The removal of said materials shall conform to the lines and grade shown. Excavation for pipe, wire, or conduits shall be by open trench unless otherwise specified or shown on the plans. However, should the Contractor elect to tunnel or jack any portion not so specified, he shall first obtain approval from the Engineer. The Contractor shall furnish, place, and maintain all supports and shoring that may be required for the sides of the excavation, and all pumping, ditching, or other approved measures for the removal or exclusion of water, including storm water and waste water reaching the site of the work from any source so as to prevent damage to the work or adjoining property. The Contractor shall be responsible for any damage to persons or property due to interruption or diversion of storm or wastewater on account of his operations. If due to delays in delivery of materials or for other reasons, and the Contractor is not expected to fully complete the work within any excavated area in a reasonable length of time as determined by the Engineer, the Engineer may require the Contractor to backfill the excavation and re-excavate when the work can be completed expeditiously, with no additional payment therefore.

1. Except as otherwise shown or provided herein, excavation shall be open cut trenches with vertical sides up to the top of the pipe, and from the top of the pipe to the ground surface. The bottom of the trench shall have a maximum width equal to the outside diameter of the pipe plus 24 inches (600 mm) or as shown on the plans. If the maximum trench width is exceeded, the Contractor shall provide either additional bedding, another type of bedding, or a higher strength of pipe if required by the Engineer, with no additional payment therefore. Trench widths greater than the outside diameter of the pipe plus 24 inches (600 mm) may be required by the Engineer, for flexible pipe to compensate for low stability soils.

   Except when otherwise specified or ordered by the Engineer, the bottom of the trench shall be excavated uniformly to the grade or depth indicated on the drawings. The maximum amount of open trench permitted in any one location shall be 500 feet (152 meters), or the length necessary to accommodate the amount of pipe installed in a single day, whichever is greater, unless otherwise approved by the Engineer. Trench shall be considered open until backfilled to finish surface. Trenches across streets shall be completely backfilled as soon as possible after pipe, wire or conduit installation.

   Substantial bridging, properly anchored, capable of carrying the legal limit loading, in addition to adequate trench bracing, shall be used to bridge across trenches at street crossings where trench backfill and temporary patches have not been completed during regular working hours. Safe and convenient passage for pedestrians and access to all properties shall be provided.

2. Trench Over-excavation. Wherever the excavation is made below the grade shown on the drawings, or below the grade ordered by the Engineer, it shall be refilled to the required grade with suitable bedding material as specified in Subsection 312333.3.2.

   Trench over-excavation below the specified level of bedding material, and additional backfill material, ordered by the Engineer because unsuitable materials are encountered, shall be paid by the appropriate contract item.

   Trench over-excavation and backfill to control groundwater or to facilitate ponding or jetting shall be at the option and expense of the Contractor.
3. Disposal of Unsuitable and Excess Excavated Materials. Excess material and excavated material unsuitable for backfill, shall be removed from the site of the work by the end of each working day unless otherwise approved by the Engineer and disposed of by the Contractor.
4. Changes in Alignment or Grade. In the event that changes in elevation of the trench of less than 6 inches (150 mm) are ordered by the Engineer, no changes in the contract amount will be allowed.

3.2 PIPE BEDDING

A. Except as otherwise provided herein or in the Special Provisions, or as otherwise shown on the plans, the trench shall be excavated to a depth of at least 6 inches (150 mm) below the bottom of the pipe barrel and to a depth which will be sufficient to provide at least 2-inch (50 mm) clearance under the pipe bell, and backfilled to the required grade of the bottom of the pipe with "Type II Aggregate Base Backfill" or "Sand Backfill." “Crushed Rock” may be used for pipe bedding only if material use has been specifically approved by the governing agency. When "Crushed Rock" is used for pipe bedding, the Contractor shall follow the same procedures described later in this subsection when "drain backfill" is used to control groundwater.

B. The bedding shall be compacted to at least 90% of maximum density. Pipe bedding shall be placed and prepared in such a manner that there will be a firm, continuous support along the entire length of the pipe barrel. Bell holes in the bedding shall provide at least 2-inch (50 mm) clearance beneath pipe joints.

C. Unless otherwise specified, laying pipe on mounds of the approved bedding material compacted firmly in place will be allowed whenever pipe 18 inches in diameter or smaller is being used, excepting sanitary sewer pipe and storm drain pipe; when "Type II Aggregate Base Backfill" or "Sand Backfill" is used for bedding material. The mounds shall be a minimum of 6 inches (150 mm) along the length of the pipe and of adequate size to hold the pipe in alignment and to maintain a 2-inch (50 mm) minimum clearance from the bottom of the coupling to the trench bottom. Each pipe shall be laid on two mounds with the center of each mound placed approximately one-fifth of the pipe length from each end. The clearance between the trench bottom and the bottom of the coupling and/or pipe barrel shall be properly backfilled utilizing "Type II Aggregate Base Backfill" or "Sand Backfill" and the material shall be compacted utilizing appropriate methods and equipment to provide a firm and uniform bedding throughout the entire length of the pipe.

D. In the event that "Drain Backfill" is used to control groundwater, the Contractor shall at his expense, construct dams within the drain rock bedding material at maximum intervals of 600 feet (180 meters) or at each manhole, whichever is less. In areas with active groundwater, the dams shall be constructed to the top of the pipe or the level of groundwater, whichever is greater. For “Crushed Rock” bedding, the dams are to be constructed to the top of bedding elevation, as a minimum, which could be the foundation of the manhole. The dam material shall be Portland Cement concrete conforming to the requirements of Section 321313 and shall have a minimum thickness of 6 inches (150 mm). All pipe shall be placed directly on the drain rock bedding material unless otherwise required or approved by the Engineer.

E. If groundwater is present or anticipated to be present, a filter material as specified in Subsection 312323.13.3.1, "General," may be required by the Engineer.

F. CLSM may also be used for pipe bedding material. When CLSM is used, laying pipe on mounds of approved bedding material as described above precedes the placement of CLSM. CLSM is then placed adjacent to the pipe and allowed to flow and is worked beneath the pipe to provide continuous, uniform support. Care shall be exercised as discussed in Subsection 312333.2.6 to prevent movement or flotation of the pipe caused by placement of the CLSM.

3.3 TRENCH BACKFILL

A. Except as otherwise provided or approved by the Engineer, after the pipe or conduit is laid, trenches shall be backfilled with "Sand Backfill," "Type II Aggregate Base Backfill," or with “CLSM” in the pipe zone as defined in the following table:

Pipe or Conduit	Pipe Zone
2-inch (50 mm) or less diameter	Bottom of pipe to 6 inches (150 mm) above the top of the pipe
Greater than 2-inch (50 mm) diameter, except vitrified clay pipe	Bottom of pipe to 12 inches (300 mm) above the top of the pipe
Vitrified clay pipe	Bottom of pipe to 24 inches (600 mm) above the top of the pipe

B. “Crushed Rock” shall not be used to backfill in the pipe zone unless specifically pre-approved by the governing agency.

C. The partially backfilled trench shall be compacted to not less than 90% of maximum density except when "CLSM" is used.

1. In unpaved areas and areas outside the existing or proposed street right-of-way, the remaining backfill shall be "CLSM," "Granular Backfill," or "Selected Backfill," except that no stones or lumps greater than 3 inches will be permitted if "Selected Backfill" is used in trenches 2 feet (600 mm) or less in width. Except when "CLSM" is used, the material shall be compacted to not less than 85% of maximum density, except for the top 12 inches (300 mm), which shall be compacted to 90% of maximum density unless otherwise approved by the Engineer. The upper 12 inches (300 mm) below the existing grade in the traveled portion of an unpaved road shall be by mechanical means only.
2. In paved areas and areas within the existing or proposed street right-of-way, the remaining backfill shall consist of one of the following types as determined by the Engineer.
   a. Granular or Selected Backfill. Backfill material from the pipe zone to a plane, which is a minimum of 16 inches (400 mm) below the bottom of pavement, shall be "Granular Backfill," or "Selected Backfill."

      If "Selected Backfill" is used in trenches 2 feet (600 mm) or less in width, no stones or lumps greater than 3 inches will be permitted. The material shall be compacted to not less than 95% of maximum density.

      Backfill material for the minimum of 16 inches (400 mm) beneath the pavement shall consist of "Type II Aggregate Base" conforming to the requirements of Section 321123. The material shall be mechanically compacted to not less than 95% of maximum density.

b. CLSM. “CLSM” shall be placed from the top of the pipe zone to the bottom of the pavement. In deep trenches, backfill material from the pipe zone to a plane which is a minimum of 24 inches (600 mm) below the bottom of the pavement may be "Selected Backfill," "Granular Backfill," or “CLSM."

D. Compaction shall be done by mechanical means. Mechanically compacted backfill shall be placed in layers of thickness compatible with the characteristics of the backfill and the type of equipment being used, but not exceeding 8 inches (200 mm) in loose thickness before compaction when hand-directed compaction equipment is used unless otherwise approved by the Engineer. Each layer shall be evenly spread, moistened, and tamped or rolled until the specified relative compaction has been attained.

3.4 TESTING

A. Where backfill is required to be compacted to a specified density, field tests for compliance may be made by the Contracting Agency using the test procedure prescribed in this specification. For density determination tests the Contractor shall excavate at his expense in accordance with Subsection 312333.3.1 any trench horizon the Contracting Agency may request. Where tests reveal non-compliance with the requirements of the contract, the Contractor shall bear the costs of subsequent recompaction and retesting until the required density is obtained.

B. Where CLSM is required to meet compressive strength requirements, field tests will be performed by the Contractor or Agency in accordance with the testing procedures outlined in Subsection 312333.3.5. The Contractor shall provide the Contracting Agency all materials and access required to perform this testing. If tests indicate potentially non-complying materials, the Contractor shall bear the cost of subsequent retesting and engineering analysis necessary to determine necessary corrective measures and all costs related the corrective measures required for resolution of the non-compliance to the satisfaction of the Engineer, including, if required, removal and replacement of the work.

3.5 COMPRESSIVE STRENGTH TESTING PROCEDURE VERIFICATION

A. The Contractor shall cast one set of six 4-inch x 8-inch (600 mm x 1200 mm) specimens in concrete masonry block molds. The Contractor shall insert 4-inch x 8-inch (600 mm x 1200 mm) perforated molds into the in-place CLSM represented by the cast specimens. Both the cast specimens and the in-place specimens shall be field-cured for 4 days; after which they shall be returned to the testing laboratory. The specimens shall then be laboratory-cured in a 100% humidity, temperature-controlled concrete cure room (cure tanks should not be used). Two samples from each set shall be tested at the ages of 7, 28 and ninety (90) days.

3.6 CUTTING AND RESTORING STREET SURFACING

A. Prior to beginning Work within any public right-of-way, or cutting any street surfacing therein, an encroachment permit and barricade plan approval shall be obtained from the governmental entity or agency having jurisdiction over that right-of-way. Permit fees and construction restrictions shall be in accordance with the rules, regulations, and ordinances of the entity or agency having jurisdiction.

B. While undergoing improvements, all streets upon or within which any work is being done shall be kept open to all traffic by the Contractor, unless otherwise approved by the Engineer, or as provided in the Special Provisions.

Prior to beginning the work, barricading and traffic control devices conforming to the latest editions of the Traffic Control Section (401) of the Uniform Standard Specifications and the Manual on Uniform Traffic Control Devices shall be in place, and shall be in compliance with the governmental agency approved traffic control and barricade plan.

C. Pavement in the area of the trench excavation may be wheel cut or spade cut. Trench excavation and backfill shall be per the applicable sections of the Uniform Standard Specifications and Standard Drawings. "CLSM" shall be used in the following cases:
   1. All trenches 8 inches (200 mm) or less in width for installation of conduit (full depth to bottom of asphalt surface).
   2. Trenches for service laterals on developed major streets (greater than 60 feet of planned right-of-way) as determined by the Engineer.

D. Whenever permanent pavement patches are not constructed immediately following trench backfilling operations, temporary pavement patches consisting of a minimum of 2 inches (50 mm) of hot or cold plant mix or plates must be utilized to provide the required number of paved travel lanes. Plates may be left in place for the short duration as approved by the Engineer. Temporary pavement patches may be left in place for a maximum of 30 working days following completion of backfilling operations unless otherwise approved by the Engineer.

The following surface tolerance for temporary patches shall be observed. When a 12-foot (4 meter) straight edge is laid across the temporary patch parallel to the centerline of the street and in a direction transverse to the centerline, a rut, hump, or depression of more than ¾-inch (20 mm) shall not be evident. Deteriorated temporary patches exhibiting ruts, humps, or depressions shall be repaired or replaced immediately upon notification of the Engineer. If the existing street exceeds the above tolerances, then the temporary patch shall be equal to or better than the condition of the surrounding pavements.

E. Prior to placing the permanent patch, the existing pavement shall be saw-cut to a neat line and to a minimum width as follows:
   1. For transverse trenches, sufficient width (4 feet [1.2 meters] minimum) to accommodate mechanical placement using Agency approved spreader box or paving machine, rolling and compaction in compliance with Section 321216.
   2. For longitudinal trenches on streets with rights-of-way greater than 60 feet, one lane width in its entirety. Sawcut lines shall be made at the edge of the travel lane and shall not fall within the travel lane. Pavement patches for longitudinal trenches on streets with rights-of-way 60 feet or less shall be sufficient width (4 feet (1.2 meters) minimum) to accommodate mechanical placement using Agency approved spreader box or paving machine, rolling and compaction in compliance with Section 321216 and saw-cut shall not be placed in wheel path area of travel lane.

3. For narrow trenches (6 inches [150 mm] or less in width) for conduit placement within 2 feet (600 mm) of the curb and gutter, a minimum of 4 feet (1.2 meters) from the lip of gutter and removed to the curb and gutter. Pavement patch width shall be sufficient to accommodate mechanical placement using Agency approved spreader box or paving machine, rolling and compaction in compliance with Section 321216 and saw-cut shall not be placed in wheel path area of travel lane.

   Existing aggregate base, if disturbed, shall be recompacted to meet the requirements of Section 310 of the MAG Uniform Standard Specifications. Compaction by rolling with vehicle tires will not be permitted. Aggregate base courses, which were constructed with geosynthetics, shall be repaired in conformance with the manufacturer's recommendations.

F. Existing asphalt concrete shall be replaced with the same depth on major streets (greater than 60 feet of planned right-of-way) except that the minimum depth shall be 4 inches (100 mm) and shall be placed in multiple lifts of equal thickness. Existing asphalt concrete shall be replaced with the same depth in local streets (60 feet or less of planned right-of-way) except that the minimum depth shall be 3 inches (75 mm); for existing depth of 4 inches (100 mm) or more, pavement shall be replaced in multiple lifts of equal thickness.

G. Completion of the permanent patch in areas where an open-graded surface course exists, which is less than 5 years in age, shall include placement of a surface course to match the existing surface texture.

H. Existing asphalt pavement or concrete shall be replaced with like material. In areas where lime treated sub-base, cement modified sub-base, soil cement, or similar materials have been used, the Contractor may substitute a lean concrete mix or asphalt concrete equivalent, subject to approval of the Engineer.

   Upon completion of the permanent patch, including the surface treatment, the surface shall be thoroughly compacted, smooth, and free from ruts, humps, depressions, or irregularities. When a straightedge 12 feet (4 meters) long is laid across the permanent patch parallel to the centerline of the street and in a direction transverse to the centerline, the surface shall not vary more than ¼-inch from the lower edge of the straightedge. Patches exhibiting deviations greater than ¼-inch shall be replaced prior to acceptance of the patch. If the existing street exceeds the above tolerances, then the patch shall be equal to or better than the condition of the surrounding pavement.

I. Any concrete improvements disturbed or damaged during construction shall be replaced prior to placement of the permanent pavement patch. Damaged sections of concrete sidewalk shall be removed and replaced to the nearest expansion joint or score line. Damaged concrete curb and gutter shall be removed and replaced to the nearest expansion joint, or as approved by the Engineer. Replacement of less than a 10-foot length of curb and gutter will not be permitted. Under no circumstances will saw cutting of concrete valley gutters be allowed. Valley gutters shall be replaced in their entirety.

J. All traffic control devices removed or disturbed during construction must be replaced upon completion of the permanent patch including but not limited to delineation, paint, thermoplastic pavement markings, and traffic signal detector loops. Temporary lane lines and other markings used during construction shall be permanently removed, to the satisfaction of the Engineer, prior to placing the new traffic stripes or markings.

END OF SECTION

SECTION 312500 - EROSION AND SEDIMENTATION CONTROLS

PART 1 - GENERAL

1.1 SUMMARY

A. This work shall consist of preparing slopes, placing and compacting top soil, seeding, fertilizing, jute matting, and mulching graded and disturbed areas within the Arizona Department of Transportation State Route 73 right-of-way in accordance with these specifications and the details shown in the contract documents.

1.2 RELATED DOCUMENTS

A. Drawings and general provisions of the Contract apply to work of this section, and unless otherwise indicated:
   1. Arizona Department of Transportation 2021 Standard Specifications for Road and Bridge Construction, Division VIII for all work performed within the Arizona Department of Transportation State Route 73 right-of-way

PART 2 - MATERIALS

2.1 GENERAL

A. The materials used shall be those prescribed for the several items which constitute the finished work.

2.2 PLANTING SOIL

A. Unless designated in the contract documents, the Contractor shall make his own arrangements for obtaining soil and he shall pay all costs involved. Soil shall be transported directly from the source to final position unless otherwise permitted. Soil shall not be obtained from an area known to have noxious weeds growing in it.

2.3 SEED:

A. All seeds shall conform with all laws and regulations pertaining to the sale and shipment of seed required by the Arizona State Department of Agriculture and the Federal Seed Act. All shipments of seed shall be reported to the Arizona State Department of Agriculture for inspection. Seed shall be of the varieties and proportions specified in the contract documents or as recommended by the local National Resource Conservation Service Field Office.

2.4 FERTILIZER AND AGRICULTURAL MINERALS

A. All fertilizer and agricultural minerals shall conform with all rules and regulations as required by the Arizona State Department of Agriculture. Commercial fertilizer formulation and rate of application shall be as specified in the contract documents and subject to sampling for verification of analysis.

2.5 MULCH:

A. Hay or Straw. Hay or straw shall be acceptable to the Engineer. All shipments of hay or straw shall be free of noxious weeds as defined by Arizona State Department of Agriculture. Rate of application shall be as specified in the contract documents.

B. Wood Cellulose Fiber. Wood cellulose fiber shall be manufactured in such a manner that after addition and agitation in slurry tanks with fertilizers, seeds, water, and other approved additives, the fibers in the material will become uniformly suspended to form a homogeneous slurry. When hydraulically sprayed on the ground, the material shall be uniformly impregnated with seed. Rate of application shall be as specified in the contract documents.

2.6 ASPHALT EMULSION

A. Asphalt emulsion used as a tie-down for mulch shall be as described in the contract documents.

PART 3 - EXECUTION

3.1 PREPARATION

A. Excavation slopes shall be thoroughly cultivated to the depth shown in the contract documents, after which planting soil, if required by the contract, shall be uniformly spread to an approximate thickness of 4 inches (10.2 cm), the exact thickness will be determined by the Engineer.

B. Cultivation of embankment slopes shall be required before placing planting soil unless otherwise specified in the contract documents or ordered by the Engineer. Such cultivation shall be considered subsidiary to other portions of the work and no direct payment will be made for such work.

C. Cultivation shall not be performed until all equipment is through working in the area, except equipment required to cultivate the area and spread planting soil.

D. After cultivation and prior to seeding, all rocks 1-inch (2.5 cm) in smallest dimension and larger shall be removed from all slopes to be seeded and shall be disposed of as approved by the Engineer.

3.2 PLACEMENT OF PLANTING SOIL

A. Planting soil shall be evenly spread over the specified areas to the depth shown on the plans unless otherwise approved by the Engineer. After the planting soil has been spread, all large clods, hard lumps, rocks, and litter shall be raked up, removed, and disposed of by the Contractor.

B. Planting soil shall not be placed when the ground is frozen, excessively wet, or, in the opinion of the Engineer, in a condition detrimental to the work.

C. All damage occurring to existing roadbeds, shoulders, walks, curbs, or other existing adjacent structures or areas due to the Contractor's operation in hauling and placing the planting soil shall be repaired by the Contractor at his own cost and expense.

3.3 FIRMING OF PLANTING SOIL

A. Planting soil shall be made firm by use of a heavy or weighted disk set at an acute angle. The entire planting area shall be firmed by a minimum of three passes of the disk. The planting soil surface shall be brought to finished grade by one pass of a toothed harrow with teeth set at a 45° angle or by one pass of a steel-wire mat. Soil firming operations shall be performed by traveling at right angle to the slope, except slopes greater than 30% shall be firmed by equipment conveyed up and down the slope by means devised by the Contractor. After firming operations, the planting soil shall be 2 inches (5 cm) below the top of all structures.

3.4 SEEDING AND FERTILIZING

A. The Contractor shall notify the Engineer not less than 24 hours in advance of any seeding operation and he shall not begin the work until areas prepared or designated for seeding have been approved. Following the Engineer's approval, seeding and fertilizing of the approved slopes shall begin immediately.

B. Seeding shall not be done during windy weather or when the ground is frozen. Seed and fertilizer shall be uniformly spread over the area at the rate and mix specified in the contract documents. Seed and fertilizer may be sown by one of the following methods.

1. An approved type hydro-seeder which utilizes water as the carrying agent and maintains a continuous agitator action that will keep seed and fertilizer mixed in uniform distribution until pumped from the tank. Pump pressure shall be such as to maintain a continuous, non-fluctuating stream of solution.
2. Approved blower equipment with an adjustable disseminating device capable of maintaining a constant, measured rate of material discharge that will ensure an even distribution of seed and fertilizer at the rate herein specified.
3. Helicopters properly equipped for aerial seeding and fertilizing. Helicopters so equipped shall have the following:
   a. Two hoppers or seed compartments each capable of containing a minimum of 100 pounds (45 kilograms) of grass seed or granular fertilizer.
   b. Power driven, readily adjustable disseminating mechanisms capable of maintaining a constant, measured rate of distribution of grass seed or granular fertilizer.
   c. Where liquid fertilizer is furnished in lieu of dry granular fertilizer, the helicopter shall be equipped with two barrels or containers capable of containing a minimum of 15 gallons (57 liters) each. Distribution shall be a spray boom of sufficient size and length, fitted with proper nozzles to distribute uniformly, liquid fertilizer as herein specified.
4. Approved power-drawn drills, with double-disc front delivery openers, and depth bands for positive depth control. Depth control shall be set at a depth of ¾-inch (2 cm) for consistent furrow bottom placement.

   An approved deep furrow drill may be used where it is determined the seedbed is firm and there is little danger of soil blowing. An approved spreader may be used for fertilizer placement. Drills and spreaders shall be calibrated before use on the project.

Areas inaccessible to above methods of application shall be seeded and fertilized by approved hand methods. Distribution of the material shall be uniform and at the rates specified.

It shall be the Contractor's responsibility to provide qualified personnel experienced in all phases of the seeding and fertilizing operation, equipment, and methods as herein specified.

3.5 SPREADING MULCH

A. Hay or Straw. Hay or straw mulch shall be furnished, hauled, and evenly applied at the rates indicated, and shall be spread by means of an approved type mulch spreader. The spreader shall produce a uniform distribution of the hay, without cutting or breaking it into short stalks. Areas beyond the range of the mulch spreader shall be mulched by approved hand methods. Distribution of the material shall be uniform and at the rate specified in the contract documents.

Straw, or hay unless otherwise specified, shall be anchored into the soil by use of a heavy disc with flat serrated discs approximately ¼-inch (0.6 cm) thick, having dull edges and spaced no more than 9 inches (23 cm) apart. Anchoring shall be to a depth of 2 inches (5 cm) across the slope, and with no more than one pass of the equipment on the same surface.

B. Wood Cellulose Fiber. Wood cellulose fiber utilized as a mulch may be applied with seed and fertilizer in one operation by approved hydraulic equipment. The equipment shall have a built-in agitation system with an operating capacity sufficient to agitate, suspend and homogeneously mix a slurry of the specified amount of fiber, fertilizer, seed, and water. Distribution and discharge lines shall be large enough to prevent stoppage and shall be equipped with a set of hydraulic discharge spray nozzles which will provide a uniform distribution of the slurry.

C. Wood Chips. Wood chips utilized as a mulch may be applied by available mechanical chip spreaders or by approved hand methods. The wood chips shall be spread to an average depth of 3 inches (7.6 cm).

D. Bark. Bark utilized as a mulch may be applied by available mechanical spreaders or by approved hand methods. The bark shall be spread on open slope areas to an average depth of 3 inches (7.6 cm). Bark applied as a mulch for tree and shrub rings shall be spread to an average depth of 4 inches (10 cm).

3.6 APPLYING ASPHALT EMULSION

A. When called for in the contract documents, mulch material shall be anchored in place with asphalt emulsion as herein specified. Asphalt emulsion shall be sprayed into the mulch as it leaves the blower pipe and shall be uniformly mixed with the mulch. Asphalt emulsion as specified shall be applied at the rate of 250 gallons per acre (2,300 liters per hectare). Any mulch disturbed or displaced following application shall be removed, reseeded, and remulched as specified.

3.7 PLACING JUTE MATTING

A. Jute matting shall be unrolled and placed parallel to the flow of water immediately following the bringing to finished grade the area specified in the plans or the placing of seed and fertilizer. Where more than one strip is required to cover the given areas, they shall overlap a minimum of 4 inches (10 cm). Ends shall overlap at least 6 inches (15 cm) with the up-grade section on top. The up-slope end of each strip of matting shall be buried in 6-inch (15 cm) slots with the soil firmly tamped against it. The Engineer may require that any other edge exposed to more than normal flow of water or strong prevailing winds be buried in a similar manner. Check slots shall be placed between the ends of strips by placing a tight fold of the matting at least 6 inches (15 cm) vertically into the soil. These shall be tamped and stapled the same as up-slope ends. Check slots must be spaced so that one check slot or one end occurs within each 50 feet (15 meters) of slope.

B. Edges of matting shall be buried around the edges of catch basins and other structures as herein described. Matting must be spread evenly and smoothly and in contact with the soil at all points.

C. Jute matting shall be held in place by approved wire staples, pins, spikes, or wooden stakes driven vertically into the soil. Matting shall be fastened at intervals not more than 3 feet (1 meter) apart in three rows for each strip of matting, with one row along each edge and one row alternately spaced in the middle. All ends of the matting and checks slots shall be fastened at 6-inch (15 cm) intervals across their width. Fastening devices shall anchor the matting against the soil and be driven flush with the finished grade.

END OF SECTION

SECTION 313116 - TERMITE CONTROL

PART 1 - GENERAL

1.1 SUMMARY

A. Section Includes:
   1. Soil treatment.

1.2 PREINSTALLATION MEETINGS

A. Preinstallation Conference: Conduct conference at Project site.

1.3 ACTION SUBMITTALS

A. Product Data: For each type of product.
   1. Include construction details, material descriptions, dimensions of individual components, and profiles for termite control products.
   2. Include the EPA-Registered Label for termiticide products.

1.4 INFORMATIONAL SUBMITTALS

A. Qualification Data: For qualified Installer.

B. Product Certificates: For each type of termite control product.

C. Soil Treatment Application Report: After application of termiticide is completed, submit report for Owner's records and include the following:
   1. Date and time of application.
   2. Moisture content of soil before application.
   3. Termiticide brand name and manufacturer.
   4. Quantity of undiluted termiticide used.
   5. Dilutions, methods, volumes used, and rates of application.
   6. Areas of application.
   7. Water source for application.

1.5 QUALITY ASSURANCE

A. Installer Qualifications: A specialist who is licensed according to regulations of authorities having jurisdiction to apply termite control treatment and products in jurisdiction where Project is located and who employs workers trained and approved by manufacturer to install manufacturer's products.

1.6 FIELD CONDITIONS

A. Soil Treatment:
   1. Environmental Limitations: To ensure penetration, do not treat soil that is water saturated or frozen. Do not treat soil while precipitation is occurring. Comply with requirements of the EPA-Registered Label and requirements of authorities having jurisdiction.
   2. Related Work: Coordinate soil treatment application with excavating, filling, grading, and concreting operations. Treat soil under footings, grade beams, and ground-supported slabs before construction.

1.7 WARRANTY

A. Soil Treatment Special Warranty: Manufacturer's standard form, signed by Applicator and Contractor, certifying that termite control work consisting of applied soil termiticide treatment will prevent infestation of subterranean termites, including Formosan termites (Coptotermes formosanus). If subterranean termite activity or damage is discovered during warranty period, re-treat soil and repair or replace damage caused by termite infestation.

1. Warranty Period: Five years from date of Substantial Completion.

PART 2 - PRODUCTS

2.1 MANUFACTURERS

A. Source Limitations: Obtain termite control products from single source from single manufacturer.

2.2 SOIL TREATMENT

A. Termiticide: EPA-Registered termiticide acceptable to authorities having jurisdiction, in an aqueous solution formulated to prevent termite infestation.

1. Service Life of Treatment: Soil treatment termiticide that is effective for not less than five years against infestation of subterranean termites.

PART 3 - EXECUTION

3.1 EXAMINATION

A. Examine substrates, areas, and conditions, with Applicator present, for compliance with requirements for moisture content of soil per termiticide label, interfaces with earthwork, slab and foundation work, landscaping, utility installation, and other conditions affecting performance of termite control.

B. Proceed with application only after unsatisfactory conditions have been corrected.

3.2 PREPARATION

A. General: Prepare work areas according to the requirements of authorities having jurisdiction and according to manufacturer's written instructions before beginning application and installation of termite control treatment(s). Remove extraneous sources of wood cellulose and other edible materials, such as wood debris, tree stumps and roots, stakes, formwork, and construction waste wood from soil within and around foundations.

B. Soil Treatment Preparation: Remove foreign matter and impermeable soil materials that could decrease treatment effectiveness on areas to be treated. Loosen, rake, and level soil to be treated, except previously compacted areas under slabs and footings. Termiticides may be applied before placing compacted fill under slabs if recommended in writing by termiticide manufacturer.

1. Fit filling hose connected to water source at the site with a backflow preventer, according to requirements of authorities having jurisdiction.

3.3 APPLYING SOIL TREATMENT

A. Application: Mix soil treatment termiticide solution to a uniform consistency. Distribute treatment uniformly. Apply treatment at the product's EPA-Registered Label volume and rate for maximum specified concentration of termiticide to the following so that a continuous horizontal and vertical termiticidal barrier or treated zone is established around and under building construction.
   1. Slabs-on-Grade and Basement Slabs: Under ground-supported slab construction, including footings, building slabs, and attached slabs as an overall treatment. Treat soil materials before concrete footings and slabs are placed.
   2. Foundations: Soil adjacent to and along the entire inside perimeter of foundation walls; along both sides of interior partition walls; around plumbing pipes and electric conduit penetrating the slab; around interior column footers, piers, and chimney bases; and along the entire outside perimeter, from grade to bottom of footing.
   3. Crawlspaces: Soil under and adjacent to foundations. Treat adjacent areas, including around entrance platform, porches, and equipment bases. Apply overall treatment only where attached concrete platform and porches are on fill or ground.
   4. Masonry: Treat voids.
   5. Penetrations: At expansion joints, control joints, and areas where slabs and below-grade walls will be penetrated.

B. Post warning signs in areas of application.

C. Reapply soil treatment solution to areas disturbed by subsequent excavation, grading, landscaping, or other construction activities following application.

3.4 PROTECTION

A. Avoid disturbance of treated soil after application. Keep off treated areas until completely dry.

B. Protect termiticide solution dispersed in treated soils and fills from being diluted by exposure to water spillage or weather until ground-supported slabs are installed. Use waterproof barrier according to EPA-Registered Label instructions.

3.5 MAINTENANCE SERVICE

A. Maintenance Service: Beginning at Substantial Completion, maintenance service shall include 12 months' full maintenance by manufacturer's authorized service representative. Include monthly maintenance as required for proper performance according to the product's EPA-Registered Label and manufacturer's written instructions. Parts and supplies shall be manufacturer's authorized replacement parts and supplies.

B. Continuing Maintenance Proposal: Provide from termite-control-treatment Installer to Owner, in the form of a standard yearly (or other period) maintenance agreement, starting on date initial maintenance service is concluded. State services, obligations, conditions, and terms for agreement period and for future renewal options.
   1. Include annual inspection for termite activity and effectiveness of termite treatment according to manufacturer's written instructions.

END OF SECTION

SECTION 316329 – DRILLED CONCRETE PIERS AND SHAFTS

PART 1 - GENERAL

1.1 RELATED DOCUMENTS

A. Drawings and general provisions of the Contract, including General and Supplementary Conditions and Division 1 Specification Sections, apply to this Section.

1.2 SUMMARY

A. This Section includes the following:
   1. Dry-installed drilled piers.

B. Related Sections include the following:
   1. Division 3 Section “Cast-in-Place Concrete” for general structural and building applications of concrete.
   2. Division 3 Section “Concrete Reinforcement”

1.3 UNIT PRICES

A. Basis of Bids: Base bids on indicated number of drilled piers; design length from top elevation to bottom of shaft, and diameter of shaft.

1.4 SUBMITTALS

B. Product Data: For each type of product indicated.

C. Shop Drawings: For concrete reinforcement detailing fabricating, bending, and placing.

D. Design Mixes: For each class of concrete. Include revised mix proportions when characteristics of materials, Project conditions, weather, test results, or other circumstances warrant adjustments.
   1. Laboratory Test Reports: For evaluation of concrete materials and mix design.

1.5 QUALITY ASSURANCE

A. Drilled-Pier Standard: Comply with provisions in ACI 336.1, "Reference Specifications for the Construction of Drilled Piers," unless modified in this Section.

B. Survey Work: Engage a qualified land surveyor or professional engineer to perform surveys, layouts, and measurements for drilled piers. Before excavating, lay out each drilled pier to lines and levels required. Record actual measurements of each drilled pier's location, shaft diameter, bottom and top elevations, deviations from specified tolerances, and other specified data.
   1. Record and maintain information pertinent to each drilled pier and cooperate with Contractor's testing and inspecting agency to provide data for required reports.

C. Testing Agency Qualifications: Qualified according to ASTM C 1077 and ASTM E 329 to perform material evaluation tests and to design concrete mixes, as documented according to ASTM E 548.

1.6 PROJECT CONDITIONS

A. Existing Utilities: Locate existing underground utilities before excavating drilled piers. If utilities are to remain in place, provide protection from damage during drilled-pier operations.

1. Should uncharted or incorrectly charted piping or other utilities be encountered during excavation, adapt drilling procedure if necessary to prevent damage to utilities. Cooperate with Owner and utility companies in keeping services and facilities in operation without interruption. Repair damaged utilities to satisfaction of utility owner.

B. Site Information: A geotechnical report has been prepared for this Project and is included elsewhere in the Project Manual for information only.

PART 2 - PRODUCTS

2.1 STEEL REINFORCEMENT

A. Reinforcing Bars: ASTM A 615/A 615M, Grade 60 (Grade 420), deformed.

B. Low-Alloy-Steel Reinforcing Bars: ASTM A 706/A 706M, deformed.

2.2 CONCRETE MATERIALS

A. Portland Cement: ASTM C 150, Type II, unless noted otherwise on GSN.
1. Fly Ash Admixture: ASTM C 618, Class C or F.
2. Ground Granulated Blast-Furnace Slag: ASTM C 989, Grade 100 or 120.

B. Normal-Weight Aggregate: ASTM C 33, uniformly graded, 3/4-inch (19-mm) maximum aggregate size.

C. Water: Potable, complying with ASTM C 94/C 94M requirements.

D. Admixtures: Certified by manufacturer to contain not more than 0.1 percent water-soluble chloride ions by mass of cementitious material and to be compatible with other admixtures and cementitious materials. Do not use admixtures containing calcium chloride.
1. Water-Reducing Admixture: ASTM C 494, Type A.
2. Water-Reducing and Retarding Admixture: ASTM C 494, Type D.
3. High-Range, Water-Reducing Admixture: ASTM C 494, Type G.
4. Plasticizing and Retarding Admixture: ASTM C 1017/C 1017M, Type II.

2.3 CONCRETE MIX

A. Prepare design mixes according to ACI 211.1 and ACI 301 for each type and strength of concrete determined by either laboratory trial mix or field test data bases.

1. Use a qualified testing agency for preparing and reporting proposed mix designs for laboratory trial mix basis.

B. Proportion mixes according to ACI 211.1 and ACI 301 to provide normal-weight concrete with the following properties:
1. Compressive Strength (28 Days): 4000 psi (27.58 MPa).
2. Minimum Slump: Capable of maintaining the following slump until completion of placement:
   a. 4 ½ inches (100 mm) for dry, uncased, or permanent-cased drilling method. (U.N.O.)
3. Do not air entrain concrete for drilled piers.

C. Cementitious Materials: Limit percentage, by weight, of cementitious materials other than portland cement according to ACI 301 limits as if concrete were exposed to deicing chemicals.

D. Concrete-mix design adjustments may be considered if characteristics of materials, Project conditions, weather, test results, or other circumstances warrant. Resubmit and obtain approval of proposed changes to concrete-mix proportions.

2.4 CONCRETE MIXING

A. Ready-Mixed Concrete: Measure, batch, mix, and deliver concrete according to ASTM C 94/C 94M, and furnish batch ticket information.
   1. Do not add water to concrete mix after mixing.
   2. Maintain concrete temperature to not exceed 90 deg F (32 deg C).

PART 3 - EXECUTION

3.1 PREPARATION

A. Protect structures, utilities, sidewalks, pavements, and other facilities from damage caused by settlement, lateral movement, vibration, and other hazards created by drilled-pier operations.

3.2 EXCAVATION

A. Unclassified Excavation: Excavation is unclassified and includes excavation to bearing elevations regardless of character of materials or obstructions encountered.
   1. Obstructions: Unclassified excavation includes removal of unanticipated boulders, concrete, masonry, or other subsurface obstructions.
   2. Obstructions: Removal of unanticipated boulders, concrete, masonry, or other unforeseen obstructions that cannot be removed by conventional augers fitted with soil or rock teeth, drilling buckets, or underreaming tools attached to drilling equipment of size, power, torque, and downthrust necessary for the Work, will be paid according to Contract provisions for changes in the Work.

B. Classified Excavation: Excavation is classified as standard excavation, special excavation, and obstruction removal and includes excavation to bearing elevations, as follows:
   1. Standard excavation includes excavation accomplished with conventional augers fitted with soil or rock teeth, drilling buckets, and underreaming equipment attached to drilling equipment of size, power, torque, and downthrust necessary for the Work.
   2. Special excavation includes excavation that requires special equipment or procedures above or below indicated depth of drilled piers where drilled-pier excavation equipment used in standard excavation, operating at maximum power, torque, and downthrust, cannot advance the shaft.
      a. Special excavation requires use of special rock augers, core barrels, air tools, blasting, or other methods of hand excavation.
      b. Earth seams, rock fragments, and voids included in rock excavation area will be considered rock for full volume of shaft from initial contact with rock.
   3. Obstructions: Removal of unanticipated boulders, concrete, masonry, or other unforeseen obstructions that cannot be removed by conventional augers fitted with soil or rock teeth, drilling buckets, or underreaming tools attached to drilling equipment of size, power, torque, and downthrust necessary for the Work, will be paid according to Contract provisions for changes in the Work.

C. Prevent surface water from entering excavated shafts. Conduct water to site drainage facilities.

D. Excavate shafts for drilled piers to indicated elevations. Remove loose material from bottom of excavation.
   1. Excavate bottom of drilled piers to level plane within 1:12 tolerance.
   2. Remove water from excavated shafts before concreting.
   3. Excavate rock sockets of dimensions indicated.
   4. Cut series of grooves about perimeter of shaft to height from bottom of shaft, vertical spacing, and dimensions indicated.

E. Notify and allow Contractor's testing and inspecting agency to test and inspect bottom of excavation. If unsuitable bearing stratum is encountered, make adjustments to drilled piers as determined by Architect.
   1. Do not excavate shafts deeper than elevations indicated, unless approved by Architect.
   2. Additional authorized excavation will be paid according to Contract provisions for changes in the Work.

F. Excavate shafts for closely spaced drilled piers and those occurring in fragile or sand strata, only after adjacent drilled piers are filled with concrete and allowed to set.

G. Tolerances: Construct drilled piers to remain within ACI 336.1 tolerances.
   1. If location or out-of-plumb tolerances are exceeded, provide corrective construction. Submit design and construction proposals to Architect for review before proceeding.

H. Inspection: Each drilled pier must be inspected and tested by Contractor's testing and inspecting agency before placing concrete.
   1. Provide and maintain facilities with equipment required for testing and inspecting excavations. Cooperate with testing and inspecting personnel to expedite the Work.
   2. Notify Architect and testing agency at least six hours before excavations are ready for tests and inspections.

3.3 STEEL REINFORCEMENT

A. Comply with recommendations in CRSI's "Manual of Standard Practice" for fabricating, placing, and supporting reinforcement.

B. Clean reinforcement of loose rust and mill scale, earth, and other materials that reduce or destroy bond with concrete.

C. Fabricate and install reinforcing cages symmetrically about axis of shafts in a single unit.

D. Accurately position, support, and secure reinforcement against displacement during concreting. Maintain minimum cover to reinforcement.

E. Use templates to set anchor bolts, leveling plates, and other accessories furnished in work of other Sections. Provide blocking and holding devices to maintain required position during final concrete placement.

F. Protect exposed ends of extended reinforcement, dowels, or anchor bolts from mechanical damage and exposure to weather.

3.4 CONCRETE PLACEMENT

A. Place concrete in continuous operation and without segregation immediately after inspection and approval of shaft by Contractor's independent testing and inspecting agency.
   1. Construct a construction joint if concrete placement is delayed more than one hour. Level top surface of concrete. Before placing remainder of concrete, clean surface laitance, roughen, and slush concrete with commercial bonding agent or with sand-cement grout mixed at ratio of 1:1.

B. Dry Method: Place concrete to fall vertically down the center of drilled pier without striking sides of shaft or steel reinforcement.
   1. Where concrete cannot be directed down shaft without striking reinforcing, place concrete with chutes, tremies, or pumps.
   2. Vibrate entire caisson length.

C. Screed concrete at cutoff elevation level and apply scoured, rough finish. Where cutoff elevation is above the ground elevation, form top section above grade and extend shaft to required elevation.

D. Protect concrete work, according to ACI 301, from frost, freezing, or low temperatures that could cause physical damage or reduced strength.
   1. Do not use frozen materials or materials containing ice or snow. Do not place concrete on frozen subgrade or on subgrade containing frozen materials.
   2. Do not use calcium chloride, salt, or other mineral-containing antifreeze agents or chemical accelerators.

E. When hot-weather conditions exist that would seriously impair quality and strength of concrete, place concrete according to ACI 301 to maintain delivered temperature of concrete at no greater than 90 deg F (32 deg C).
   1. Place concrete immediately on delivery. Keep exposed concrete surfaces and formed shaft extensions moist by fog sprays, wet burlap, or other effective means for a minimum of seven days.

3.5 FIELD QUALITY CONTROL

A. Testing Agency: Contractor will engage a qualified independent testing and inspecting agency to sample materials, perform tests, and submit reports during excavation and concrete placement for drilled piers.

B. A drilled-pier report will be prepared by Contractor’s testing and inspecting agency for each drilled pier as follows:
   1. Actual top and bottom elevations.
   2. Top of rock elevation.
   3. Description of soil materials.
   4. Description, location, and dimensions of obstructions.
   5. Final top centerline location and deviations from requirements.
   6. Variation of shaft from plumb.
   7. Shaft excavating method.
   8. Design and tested bearing capacity of bottom.
   9. Depth of rock socket.
   10. Levelness of bottom and adequacy of cleanout.
   11. Ground-water conditions and water-infiltration rate, depth, and pumping.

12. Description of soil or water movement, sidewall stability, loss of ground, and means of control.
13. Date and time of starting and completing excavation.
14. Inspection report.
15. Position of reinforcing steel.
16. Concrete placing method, including elevation of consolidation and delays.
17. Locations of construction joints.
18. Remarks, unusual conditions encountered, and deviations from requirements.
19. Concrete testing results.

C. Soil Testing: Bottom elevations, bearing capacities, and lengths of drilled piers indicated have been estimated from available soil data. Actual elevations and drilled-pier lengths and bearing capacities will be determined by Contractor's testing and inspecting agency. Final evaluations and approval of data will be determined by Architect.
   1. Bearing Stratum Tests: Contractor's testing agency will take undisturbed core samples from drilled-pier bottoms; test each sample for compression, moisture content, and density; and report results and evaluations.

D. Concrete: Sampling and testing of concrete for quality control may include the following:
   1. Sampling Fresh Concrete: ASTM C 172, except modified for slump to comply with ASTM C 94/C 94M.
      a. Slump: ASTM C 143/C 143M; one test at point of placement for each compressive-strength test, but no fewer than one test for each concrete load.
      b. Concrete Temperature: ASTM C 1064; one test hourly when air temperature is 40 deg F (4.4 deg C) and below and when 80 deg F (27 deg C) and above, and one test for each set of compressive-strength specimens.
      c. Compression Test Specimens: ASTM C 31/C 31M; one set of four standard cylinders for each compressive-strength test, unless otherwise indicated. Mold and store cylinders for laboratory-cured test specimens, unless field-cured test specimens are required.
      d. Compressive-Strength Tests: ASTM C 39; one set for each drilled pier, but not more than one set for each truck load. One specimen will be tested at 7 days, 2 specimens will be tested at 28 days, and one specimen will be retained in reserve for later testing if required.
   2. When frequency of testing will provide fewer than five strength tests for a given class of concrete, testing will be conducted from at least five randomly selected batches or from each batch if fewer than five are used.
   3. When strength of field-cured cylinders is less than 85 percent of companion laboratory-cured cylinders, evaluate current operations and provide corrective procedures for protecting and curing in-place concrete.
   4. Strength level of concrete will be considered satisfactory if averages of sets of 3 consecutive strength test results equal or exceed specified compressive strength and no individual strength test result falls below specified compressive strength by more than 500 psi (3.45 MPa).

5. Test results will be reported in writing to Architect, concrete manufacturer, and Contractor within 24 hours of testing. Reports of compressive-strength tests will contain Project identification name and number, date of concrete placement, name of concrete testing and inspecting agency, concrete type and class, location of concrete batch in drilled pier, design compressive strength at 28 days, concrete-mix proportions and materials, compressive breaking strength, and type of break for both 7- and 28-day tests.
6. Nondestructive Testing: Impact hammer, sonoscope, or other nondestructive device may be permitted but shall not be used as sole basis for acceptance or rejection.
7. Additional Tests: Testing and inspecting agency will make additional tests of concrete when test results indicate concrete strengths or other requirements have not been met.
    a. Continuous coring of drilled piers may be required, at Contractor's expense, when temporary casings have not been withdrawn within specified time limits or where observations of placement operations indicate deficient concrete quality, presence of voids, segregation, or other possible defects.

3.6 DISPOSAL OF MATERIALS

A. Remove surplus excavated material and slurry and legally dispose of it off Owner's property.

END OF SECTION

SECTION 321123 - AGGREGATE BASE COURSES

PART 1 - GENERAL

1.1 SUMMARY

A. Aggregate base, materials, installation and inspection shall conform to the requirements of the Maricopa Association of Governments Uniform Standard Specifications for Public Works Construction, 2025 Revision to the 2020 Edition:
   1. Placement and Construction of Aggregate Base Course, Section 310.
   2. Related sections of Part 300 – Streets and Related Work.

B. Aggregate base, materials, installation and inspection for all work performed within the Arizona Department of Transportation State Route 73 right-of-way shall conform to the requirements of the Arizona Department of Transportation 2021 Standard Specifications for Road and Bridge Construction, Division III

1.2 RELATED SECTIONS

A. Section 312213 – Rough Grading

B. Section 312300 – Excavation and Fill

C. Construction Drawings

PART 2 - PRODUCTS - NOT USED

PART 3 - EXECUTION - NOT USED

END OF SECTION

SECTION 321216 - ASPHALT PAVING

PART 1 - GENERAL

1.1 SUMMARY

A. Asphalt paving shall conform to the requirements of the Maricopa Association of Governments Uniform Standard Specifications for Public Works Construction, 2025 Revision to the 2020 Edition:
   1. Placement and Construction of Asphalt Concrete Pavement, Section 321.
   2. Related sections of Part 300 – Streets and Related Work.

B. Asphalt paving within the Arizona Department of Transportation State Route 73 right-of-way shall conform to the requirements of Arizona Department of Transportation 2021 Standard Specifications for Road and Bridge Construction, Division IV

1.2 RELATED SECTIONS

A. Section 312213 – Rough Grading

B. Section 312300 – Excavation and Fill

C. Section 321123 – Aggregate Base Courses

D. Construction Drawings

PART 2 - PRODUCTS - NOT USED

PART 3 - EXECUTION - NOT USED

END OF SECTION

SECTION 321223 - IMPRINTED ASPHALT

PART 1 - GENERAL

1.1 SUMMARY

A. Section includes embossing patterns in asphalt pavement.

1.2 FIELD CONDITIONS

A. Environmental Limitations: Proceed with coating imprinted pavement only when air temperature is at least 50 deg F and rising and will not drop below 50 deg F within eight hours of coating application. Proceed only if no precipitation is expected within two hours after applying the final layer of coating.

PART 2 - PRODUCTS

PART 3 - EXECUTION

3.1 EXAMINATION

A. Verify that pavement is dry and in suitable condition to begin imprinting process according to manufacturer's written instructions.

B. Proceed with asphalt imprinting only after unsatisfactory conditions have been corrected.

C. Verify that utilities, traffic loop detectors, and other items requiring a cut and installation beneath the asphalt surface have been completed and that asphalt surface has been repaired flush with adjacent asphalt prior to beginning installation of imprinted asphalt.

END OF SECTION

SECTION 321313 - CONCRETE PAVING

PART 1 - GENERAL

1.1 SUMMARY

A. Concrete paving shall conform to the requirements of Section 02 of the White Mountain Apache Tribe IDIQ 2023 Modification of the 2019 PAO/SFC Technical Provisions, which have been included in the Project Documents for reference.

B. Concrete paving shall conform to the requirements of the Maricopa Association of Governments Uniform Standard Specifications for Public Works Construction, 2025 Revision to the 2020 Edition:
   1. Portland Cement Concrete Pavement (PCCP), Section 324
   2. Related sections of Part 300 – Streets and Related Work.

1.2 RELATED SECTIONS

A. Section 312213 – Rough Grading

B. Section 312300 – Excavation and Fill

C. Section 321123 – Aggregate Base Courses

D. Construction Drawings

PART 2 - PRODUCTS - NOT USED

PART 3 - EXECUTION - NOT USED

END OF SECTION

SECTION 321315 - CONCRETE WALKS, CURBS AND GUTTERS

PART 1 - GENERAL

1.1 SUMMARY

A. Concrete curb, walk, gutters, cross gutters, driveways, and alley intersections shall conform to the requirements of Section 02 of the White Mountain Apache Tribe IDIQ 2023 Modification of the 2019 PAO/SFC Technical Provisions, which have been included in the Project Documents for reference.

B. Concrete curb, walk, gutters, cross gutters, driveways, and alley intersections shall conform to the requirements of the Maricopa Association of Governments Uniform Standard Specifications for Public Works Construction, 2025 Revision to the 2020 Edition:
   1. Concrete Curb, Gutter, Sidewalk, Sidewalk Ramps, Driveway and Alley Entrances, Section 340
   2. Related sections of Part 300 – Streets and Related Work.

C. Concrete curb, gutters, and other flatwork within the Arizona Department of Transportation State Route 73 right-of-way shall conform to the requirements of the Arizona Department of Transportation 2021 Standard Specifications for Road and Bridge Construction, Division IX

1.2 RELATED SECTIONS

A. Section 312213 – Rough Grading

B. Section 312300 – Excavation and Fill

C. Section 321123 – Aggregate Base Courses

D. Construction Drawings

PART 2 - PRODUCTS - NOT USED

PART 3 - EXECUTION - NOT USED

END OF SECTION

SECTION 321316 - DECORATIVE CONCRETE PAVING

PART 1 - GENERAL

1.1 SUMMARY

A. Section includes colored and textured concrete paving.

B. Related Requirements:
   1. Section 321373 "Concrete Paving Joint Sealants" for joint sealants in expansion and contraction joints within decorative concrete paving and in joints between decorative concrete paving and other paving or adjacent construction.

C. Related Documents:
   1. The basis for designing concrete mixtures and demonstrating compliance with carbon budget targets shall be in accordance with:
      a. National Ready Mixed Concrete Association (NRMCA) Cradle-to-Gate Life Cycle Assessment of Ready-Mixed Concrete Manufactured by NRMCA Members – Version 3 (or later).
      b. National Ready Mixed Concrete Association, NRMCA Member Industry Average EPD for Ready Mixed Concrete – Version 3 (or later).

D. Embodied Carbon Goals:
   1. This project has a goal of reducing the embodied carbon footprint relative to a benchmark established the NRCMA Cradle-to-Gate Life Cycle Assessment Version 3 (or later). The target maximum Global Warming Potential (GWP) and target for maximum portland cement content is provided in Section 2 CONCRETE MIXTURES. The target carbon footprint reduction for concrete is a weighted average by volume. It shall be permitted to propose the use of innovative products and manufacturing processes for approval by the Engineer of Record. Proposed alternatives shall meet all performance criteria for strength, durability, and constructability, and achieve the required reduction in carbon footprint.
      a. CO2 mineralized concrete is permitted where available, pending concrete performance criteria is met.

1.2 DEFINITIONS

A. Cementitious Materials: Portland cement alone or in combination with one or more of blended hydraulic cement, fly ash, slag cement, and other pozzolans.

B. W/C Ratio: The ratio by weight of water to cementitious materials.

C. Embodied Carbon Footprint: embodied carbon is the carbon dioxide equivalent (CO2e) footprint of a building or infrastructure project before it becomes operational. Embodied carbon is distinct from operational carbon – data the carbon that comes from energy, heat, lighting, etc. Embodied carbon is generally expressed as Global Warming Potential. Typically, the embodied carbon is the initial embodied carbon which only accounts for the cradle to gate impacts.

D. Global Warming Potential: Global warming potential (GWP) is the heat absorbed by any greenhouse gas in the atmosphere, as a multiple of the heat that would be absorbed by the same mass of carbon dioxide. GWP is 1 for CO2. For other gases it depends on the gas and the time frame. GWP for concrete is expressed in kg of CO2e per unit of concrete (cubic yard or cubic meter).

E. Environmental Product Declaration: An Environmental Product Declaration (EPD) quantifies environmental information on the life cycle of a product to enable comparisons between products fulfilling the same function. EPDs are conducted in accordance with a Product Category Rule for the specific product being evaluated. (International Organization for Standardization 14025 as a Type III declaration).

F. Product Category Rule: Product Category Rules (PCR) are a set of rules, requirements, and guidelines for developing Environmental Product Declarations (EPD) for one or more product categories. The PCR for concrete is published by NSF International.

G. Life Cycle Assessment: Life cycle assessment (LCA) is a methodology for assessing environmental impacts associated with all the stages of the life cycle of a commercial product, process, or service.

H. Carbon Dioxide Mineralization: Active carbonation treatment of concrete during mixing such that the carbon dioxide (CO2) that is injected during mixing is mineralized (I.E.chemically converted into a mineral) within the concrete. The concrete may undergo mix optimization whereby the strength enhancement property of the mineralized CO2 is utilized to adjust cementitious content, pending that the optimized concrete mix meets concrete performance requirements as outlined.

I. Carbonization Treatment: Active introduction of CO2 into the concrete pore fluid which reacts with calcium from calcium hydroxide and calcium silicate hydrate to form calcite (CaCO3).

1.3 PREINSTALLATION MEETINGS

A. Preinstallation Conference: Conduct conference at Project site.
   1. Review methods and procedures related to decorative concrete paving, including but not limited to, the following:
      a. Concrete mixture design.
      b. Quality control of concrete materials and decorative concrete paving construction practices.
      c. Joint types, spacing and layout.
      d. Curing procedures.
      e. Cold and hot weather concreting procedures.
   2. Require representatives of each entity directly concerned with decorative concrete paving to attend, including the following:
      a. Contractor's superintendent.
      b. Decorative concrete paving Installer.

1.4 ACTION SUBMITTALS

A. Sustainable Design Submittals:

1. Product Data: For recycled content, indicating postconsumer and preconsumer recycled content and cost.
2. Product Certificates for Credit MR 5: For products and materials required to comply with requirements for regional materials, certificates indicating location of material manufacturer and point of extraction, harvest, or recovery for each raw material. Include statement indicating distance to Project, cost for each regional material, and fraction by weight that is considered regional.
3. Product Certificates: For materials manufactured within 100 miles of Project, indicating location of material manufacturer and point of extraction, harvest, or recovery for each raw material. Include distance to Project and cost for each raw material.
4. Design Mixtures for Credit ID 1.1: For each concrete mixture containing fly ash as a replacement for portland cement or other portland cement replacements. For each design mixture submitted, include an equivalent concrete mixture that does not contain portland cement replacements, to determine amount of portland cement replaced.

B. Embodied Carbon Footprint Submittals:
1. Plant specific Environmental Product Declaration (EPD) for each concrete mixture proposed for the project accompanying each concrete mixture submittal.
   a. It shall be permitted to substitute plant-specific EPDs with those listed in NRMCA Member Industry Average EPD for Ready Mixed Concrete if the proposed mixtures are similar to those listed and the concrete producer participated in providing data for the NRMCA Cradle-to-Gate Life Cycle Assessment of Ready-Mixed Concrete.
2. Plant specific Environmental Product Declaration (EPD) for each steel and fiber reinforcement product proposed for the project.
3. A calculation showing that the Global Warming Potential (GWP) of all the concrete and reinforcing materials supplied for the project considered as a weighted average by volume shall be lower than the GWP target set in Section 2.

C. Samples for Initial Selection: For each type of product, ingredient, or admixture requiring color, pattern, or texture selection.

D. Samples for Verification: For each type of exposed color, pattern, or texture indicated.

1.5 INFORMATIONAL SUBMITTALS

A. Qualification Data: For qualified installer..

B. Material Certificates: For the following, from manufacturer:
1. Cementitious materials.
2. Steel reinforcement and reinforcement accessories.
3. Fiber reinforcement.
4. Admixtures.
5. Curing compounds.
6. Applied finish materials.
7. Bonding agent or epoxy adhesive.
8. Joint fillers.

C. Product Test Reports and Certificates: For each of the following, signed by manufacturers:

1. Carbon dioxide mineralization: Provide concrete producers certificate verifying mineralization of carbon dioxide. Include quantity, location, and supplier of injected CO2.

1.6 QUALITY ASSURANCE

A. Installer Qualifications: An employer of workers trained and approved by manufacturer of decorative concrete paving systems.

B. Ready-Mix-Concrete Manufacturer Qualifications: A firm experienced in manufacturing ready-mixed concrete products and that complies with ASTM C 94/C 94M requirements for production facilities and equipment.

C. Documentation that the concrete supplier participated in supplying data to the nrmca cradle-to-gate life cycle assessment of ready-mixed concrete.
   1. Manufacturer certified according to NRMCA's "Certification of Ready Mixed Concrete Production Facilities" (Quality Control Manual - Section 3, "Plant Certification Checklist").

D. Mockups: Build mockups to verify selections made under Sample submittals and to demonstrate aesthetic effects and set quality standards for materials and execution.
   1. Build mockups of full-thickness sections of decorative concrete paving to demonstrate typical joints; surface color, pattern, and texture; curing; and standard of workmanship.
   2. Build mockups of decorative concrete paving in the location and of the size indicated or, if not indicated, build mockups where directed by Architect and not less than 96 inches by 96 inches.
   3. Approval of mockups does not constitute approval of deviations from the Contract Documents contained in mockups unless Architect specifically approves such deviations in writing.

1.7 FIELD CONDITIONS

A. Traffic Control: Maintain access for vehicular and pedestrian traffic as required for other construction activities.

B. Cold-Weather Concrete Placement: Protect concrete work from physical damage or reduced strength that could be caused by frost, freezing, or low temperatures. Comply with ACI 306.1 and the following:
   1. When air temperature has fallen to or is expected to fall below 40 deg F, uniformly heat water and aggregates before mixing to obtain a concrete mixture temperature of not less than 50 deg F and not more than 80 deg F at point of placement.
   2. Do not use frozen materials or materials containing ice or snow.
   3. Do not use calcium chloride, salt, or other materials containing antifreeze agents or chemical accelerators unless otherwise specified and approved in design mixtures.

C. Hot-Weather Concrete Placement: Comply with ACI 301 and as follows when hot-weather conditions exist:
   1. Cool ingredients before mixing to maintain concrete temperature below 90 deg F at time of placement. Chilled mixing water or chopped ice may be used to control temperature, provided water equivalent of ice is calculated in total amount of mixing water. Using liquid nitrogen to cool concrete is Contractor's option.

2. Cover steel reinforcement with water-soaked burlap, so steel temperature will not exceed ambient air temperature immediately before embedding in concrete.
3. Fog-spray forms, steel reinforcement, and subgrade just before placing concrete. Keep subgrade moisture uniform without standing water, soft spots, or dry areas.

PART 2 - PRODUCTS

2.1 CONCRETE, GENERAL

A. ACI Publications: Comply with ACI 301 unless otherwise indicated.

2.2 FORMS

A. Form Materials: Plywood, metal, metal-framed plywood, or other approved panel-type materials to provide full-depth, continuous, straight, and smooth exposed surfaces.
   1. Use flexible or uniformly curved forms for curves of a radius of 100 feet or less. Do not use notched and bent forms.

B. Forms for Textured Finish Concrete: Units of face design, size, arrangement, and configuration indicated. Provide solid backing and form supports to ensure stability of textured form liners.

C. Form-Release Agent: Commercially formulated form-release agent that will not bond with, stain, or adversely affect concrete surfaces and that will not impair subsequent treatments of concrete surfaces.

2.3 STEEL REINFORCEMENT

A. Plain-Steel Welded-Wire Reinforcement: ASTM A 1064/A 1064M, fabricated from as-drawn steel wire into flat sheets.

B. Joint Dowel Bars: ASTM A 615/A 615M, Grade 60 plain-steel bars. Cut bars true to length with ends square and free of burrs.

2.4 CONCRETE MATERIALS

A. Regional Materials: Concrete shall be manufactured within 100 miles of Project site from aggregates and cementitious materials that have been extracted, harvested, or recovered, as well as manufactured, within 100 miles of Project site.

B. Source Limitations: Obtain each type or class of cementitious material of the same brand from the same manufacturer's plant, obtain aggregate from single source, and obtain admixtures from single source from single manufacturer.

C. Cementitious Materials: Materials conforming to the following are permitted.

1. Blended Hydraulic Cement: ASTM C 595/C 595M, Type IS, portland blast-furnace slag, Type IP, portland-pozzolan, Type IL, Portland-limestone, Type IT, ternary blended cement.
   a. Type IS (70) and Type IT (70).
2. Hydraulic cement: ASTM C1157/C1157M.
3. Ground glass pozzolan: ASTM C1866/C1866M.

D. Water: Complying with ASTM C1602.

E. Carbon Dioxide Mineralization: ASTM C494 Type S. Carbon dioxide in the mixture must be post-industrial.

2.5 CURING AND SEALING MATERIALS

A. Evaporation Retarder: Waterborne, monomolecular, film forming, manufactured for application to fresh concrete.
   1. Products: Subject to compliance with requirements, available products that may be incorporated into the Work include, but are not limited to, the following:
      a. BASF Construction Chemicals - Building Systems; Confilm.
      b. Bon Tool Co.; 32-301-B7 BonWay Evaporation Retarder.
      c. Brickform, a division of Solomon Colors, Inc.; Evaporation Retarder.
      d. ChemMasters Inc.; SprayFilm.
      e. Dayton Superior Corporation; AquaFilm J74.
      f. Euclid Chemical Company (The), an RPM company; EUCOBAR.
      g. Kaufman Products, Inc.; VaporAid.
      h. Lambert Corporation; Lambco Skin.
      i. L&M Construction Chemicals, Inc.; E-CON.
      j. Meadows, W. R., Inc.; EVAPRE.
      k. Metalcrete Industries; Waterhold.
      l. Nox-Crete Products Group; Monofilm.
      m. Sika Corporation; SikaFilm.
      n. SpecChem, LLC; SpecFilm.
      o. TK Products, Division of Sierra Corporation; TK-2120 TRI-FILM.
      p. Vexcon Chemicals Inc.; Certi-Vex Envio Assist.

2.6 CONCRETE MIXTURES

A. Obtain each color, size, type, and variety of concrete mixture from single manufacturer with resources to provide concrete of consistent quality in appearance and physical properties.

B. Prepare design mixtures, proportioned according to ACI 301, for each type and strength of normal-weight concrete, and as determined by either laboratory trial mixtures or field experience.
   1. Use a qualified independent testing agency for preparing and reporting proposed concrete design mixtures for the trial batch method.

C. Drying shrinkage limit is percentage in change in length after 28 days of drying when tested as per ASTM C157 with 3 inches x 3 inches x 11 inches specimen moist cured 7 days prior to drying.

D. Limit water-soluble, chloride-ion content in hardened concrete to 0.15 percent by weight of cement.

E. Color Pigment: Add color pigment to concrete mixture according to manufacturer's written instructions and to result in hardened concrete color consistent with approved mockup.

F. Concrete Mixtures: Normal-weight concrete.
   1. Compressive Strength (28 Days): 4500 psi27.6 MPa24.1 MPa20.7 MPa.
   2. Maximum W/C Ratio at Point of Placement: 0.45.
   3. Slump Limit: 4 inches 5 inches, plus or minus 1 inch.

G. Global Warming Potential (GWP) or portland cement content shall be minimum 30% lower than the baselines established below.
   1. Baselines for 4500 psi
      a. GWP: 279 kg CO2e/cubic yard
      b. Cement Content: 576 pounds / cubic yard
   2. Baselines for 4000 psi
      a. GWP: 236 kg CO2e/cubic yard
      b. Cement Content: 475 pounds / cubic yard
   3. Baselines for 3500 psi
      a. GWP: 236 kg CO2e/cubic yard
      b. Cement Content: 475 pounds / cubic yard
   4. Baselines for 3000 psi
      a. GWP: 201 kg CO2e/cubic yard
      b. Cement Content: 394 pounds / cubic yard

PART 3 - EXECUTION

3.1 EXAMINATION

A. Examine exposed subgrades and subbase surfaces for compliance with requirements for dimensional, grading, and elevation tolerances.

B. Proof-roll prepared subbase surface below concrete paving to identify soft pockets and areas of excess yielding.
   1. Completely proof-roll subbase in one direction and repeat in perpendicular direction. Limit vehicle speed to 3 mph.
   2. Proof-roll with a pneumatic-tired and loaded, 10-wheel, tandem-axle dump truck weighing not less than 15 tons.
   3. Correct subbase with soft spots and areas of pumping or rutting exceeding depth of 1/2 inch according to requirements in Section 312000 "Earth Moving."

C. Proceed with installation only after unsatisfactory conditions have been corrected.

3.2 PREPARATION

A. Remove loose material from compacted subbase surface immediately before placing concrete.

B. Protect adjacent construction from discoloration and spillage during application of color hardeners, release agents, stains, curing compounds, and sealers.

3.3 EDGE FORMS AND SCREED CONSTRUCTION

A. Set, brace, and secure edge forms, bulkheads, and intermediate screed guides to required lines, grades, and elevations. Install forms to allow continuous progress of work and so forms can remain in place at least 24 hours after concrete placement.

B. Clean forms after each use and coat with form-release agent to ensure separation from concrete without damage.

3.4 JOINTS

A. General: Form construction, isolation, and contraction joints and tool edges true to line, with faces perpendicular to surface plane of concrete. Construct transverse joints at right angles to centerline unless otherwise indicated.
   1. When joining existing paving, place transverse joints to align with previously placed joints unless otherwise indicated.

B. Construction Joints: Set construction joints at side and end terminations of paving and at locations where paving operations are stopped for more than one-half hour unless paving terminates at isolation joints.
   1. Continue steel reinforcement across construction joints unless otherwise indicated. Do not continue reinforcement through sides of paving strips unless otherwise indicated.
   2. Doweled Joints: Install dowel bars and support assemblies at joints where indicated. Lubricate or coat with asphalt one-half of dowel length to prevent concrete bonding to one side of joint.

C. Isolation Joints: Form isolation joints of preformed joint-filler strips abutting concrete curbs, catch basins, manholes, inlets, structures, walks, other fixed objects, and where indicated.
   1. Locate expansion joints at intervals of 50 feet unless otherwise indicated.
   2. Extend joint fillers full width and depth of joint.
   3. Terminate joint filler not less than 1/2 inch or more than 1 inch below finished surface if joint sealant is indicated.
   4. Place top of joint filler flush with finished concrete surface if joint sealant is not indicated.
   5. Furnish joint fillers in one-piece lengths. Where more than one length is required, lace or clip joint-filler sections together.
   6. During concrete placement, protect top edge of joint filler with metal, plastic, or other temporary preformed cap. Remove protective cap after concrete has been placed on both sides of joint.

D. Contraction Joints: Form weakened-plane contraction joints, sectioning concrete into areas as indicated. Construct contraction joints for a depth equal to at least one-fourth of the concrete thickness, as follows, to match jointing of existing adjacent decorative concrete paving:
   1. Sawed Joints: Form contraction joints with power saws equipped with shatterproof abrasive or diamond-rimmed blades. Cut 1/8-inch- wide joints into concrete when cutting action will not tear, abrade, or otherwise damage surface and before developing random contraction cracks.
      a. Tolerance: Ensure that sawed joints are within 3 inches in both directions from centers of dowels.
   2. Doweled Contraction Joints: Install dowel bars and support assemblies at joints where indicated. Lubricate or coat with asphalt one-half of dowel length to prevent concrete bonding to one side of joint.

E. Edging: After initial floating, tool edges of paving, gutters, curbs, and joints in concrete with an edging tool to a 3/8-inch radius. Repeat tooling of edges after applying surface finishes. Eliminate edging-tool marks on concrete surfaces.

3.5 CONCRETE PLACEMENT

A. Before placing concrete, inspect and complete formwork installation, steel reinforcement, and items to be embedded or cast-in.

B. Remove snow, ice, or frost from subbase surface before placing concrete. Do not place concrete on frozen surfaces.

C. Moisten subbase to provide a uniform dampened condition at time concrete is placed. Do not place concrete around manholes or other structures until they are at required finish elevation and alignment.

D. Comply with ACI 301 requirements for measuring, mixing, transporting, and placing concrete.

E. Do not add water to concrete during delivery or at Project site. Do not add water to fresh concrete after testing.

F. Deposit and spread concrete in a continuous operation between transverse joints. Do not push or drag concrete into place or use vibrators to move concrete into place.

G. Consolidate concrete according to ACI 301 by mechanical vibrating equipment supplemented by hand spading, rodding, or tamping.
   1. Consolidate concrete along face of forms and adjacent to transverse joints with an internal vibrator. Keep vibrator away from joint assemblies or side forms. Use only square-faced shovels for hand spreading and consolidation. Consolidate with care to prevent dislocating joint devices.

H. Screed paving surface with a straightedge and strike off.

I. Commence initial floating using bull floats or darbies to impart an open-textured and uniform surface plane before excess moisture or bleedwater appears on the surface. Do not further disturb concrete surfaces before beginning finishing operations or spreading surface treatments.

3.6 FLOAT FINISHING

A. General: Do not add water to concrete surfaces during finishing operations.

B. Float Finish: Begin the second floating operation when bleedwater sheen has disappeared and concrete surface has stiffened sufficiently to permit operations. Float surface with power-driven floats or by hand floating if area is small or inaccessible to power units. Finish surfaces to true planes. Cut down high spots and fill low spots. Refloat surface immediately to uniform granular texture.

3.7 INTEGRALLY COLORED CONCRETE FINISH

A. Integrally Colored Concrete Finish: After final floating, apply the following finish:
   1. Medium-to-Fine-Textured Broom Finish: Draw a soft-bristle broom across float-finished concrete surface, perpendicular to line of traffic, to provide a uniform, fine-line texture.

2. Medium-to-Coarse-Textured Broom Finish: Provide a coarse finish by striating float-finished concrete surface 1/8 inch deep with a stiff-bristled broom, perpendicular to line of traffic.

3.8 CONCRETE PROTECTION AND CURING

A. General: Protect freshly placed concrete from premature drying and excessive cold or hot temperatures.

B. Comply with ACI 306.1 for cold-weather protection.

C. Evaporation Retarder: Apply evaporation retarder to concrete surfaces if hot, dry, or windy conditions cause moisture loss approaching 0.2 lb/sq. ft. x h before and during finishing operations. Apply according to manufacturer's written instructions after placing, screeding, and bull floating or darbying concrete but before float finishing.

D. Begin curing after finishing concrete but not before free water has disappeared from concrete surface.

3.9 PAVING TOLERANCES

A. Comply with tolerances in ACI 117 and as follows:
1. Elevation: 3/4 inch.
2. Thickness: Plus 3/8 inch, minus 1/4 inch.
3. Surface: Gap below 10-foot- long, unleveled straightedge not to exceed 1/2 inch.
4. Joint Spacing: 3 inches.
5. Joint Width: Plus 1/8 inch, no minus.

3.10 REPAIR AND PROTECTION

A. Remove and replace decorative concrete paving that is broken or damaged or does not comply with requirements in this Section. Remove work in complete sections from joint to joint unless otherwise approved by Architect.

B. Protect decorative concrete paving from damage. Exclude traffic from paving for at least 14 days after placement. When construction traffic is permitted, maintain paving as clean as possible by removing surface stains and spillage of materials as they occur.

C. Maintain decorative concrete paving free of stains, discoloration, dirt, and other foreign material. Sweep paving not more than two days before date scheduled for Substantial Completion inspections.

3.11 DECORATIVE CONCRETE PAVING SCHEDULE

A. Patterned Decorative Concrete Paving:
1. Locations: Refer to drawings for locations.
2. Coloring Method: .
   a. Color: As selected by Architect from manufacturer's full range - refer to drawings for color.
3. Field Patterning Method: Refer to drawings.

END OF SECTION

SECTION 321373 - CONCRETE PAVING JOINT SEALANTS

PART 1 - GENERAL

1.1 SUMMARY

A. Section Includes:
   1. Cold-applied joint sealants.
   2. Joint-sealant backer materials.

1.2 ACTION SUBMITTALS

A. Product Data: For each type of product.

B. Samples for Verification: For each kind and color of joint sealant required, provide samples with joint sealants in 1/2-inch- wide joints on concrete mock-ups matching the appearance of exposed surfaces adjacent to joint sealants.

1.3 INFORMATIONAL SUBMITTALS

A. Product Certificates: For each type of joint sealant and accessory.

1.4 QUALITY ASSURANCE

A. Installer Qualifications: An entity that employs installers and supervisors who are trained and approved by manufacturer.

1.5 FIELD CONDITIONS

A. Do not proceed with installation of joint sealants under the following conditions:
   1. When ambient and substrate temperature conditions are outside limits permitted by joint-sealant manufacture or are below 40 deg F.
   2. When joint substrates are wet.
   3. Where joint widths are less than those allowed by joint-sealant manufacturer for applications indicated.
   4. Where contaminants capable of interfering with adhesion have not yet been removed from joint substrates.

PART 2 - PRODUCTS

2.1 MATERIALS, GENERAL

A. Compatibility: Provide joint sealants, backing materials, and other related materials that are compatible with one another and with joint substrates under conditions of service and application, as demonstrated by joint-sealant manufacturer, based on testing and field experience.

2.2 COLD-APPLIED JOINT SEALANTS

A. Single-Component, Self-Leveling, Silicone Joint Sealant: ASTM D 5893/D 5893M, Type SL.
   1. Products: Subject to compliance with requirements,available products that may be incorporated into the Work include, but are not limited to, the following:
      a. Crafco Inc.; RoadSaver Silicone SL.
      b. Dow Corning Corporation; 890-SL.
      c. Pecora Corporation; 300 SL.

2.3 JOINT-SEALANT BACKER MATERIALS

A. Joint-Sealant Backer Materials: Nonstaining; compatible with joint substrates, sealants, primers, and other joint fillers; and approved for applications indicated by joint-sealant manufacturer, based on field experience and laboratory testing.

B. Round Backer Rods for Cold-Applied Joint Sealants: ASTM D 5249, Type 3, of diameter and density required to control joint-sealant depth and prevent bottom-side adhesion of sealant.

2.4 PRIMERS

A. Primers: Product recommended by joint-sealant manufacturer where required for adhesion of sealant to joint substrates indicated.

PART 3 - EXECUTION

3.1 EXAMINATION

A. Examine joints to receive joint sealants, with Installer present, for compliance with requirements for joint configuration, installation tolerances, and other conditions affecting joint-sealant performance.

B. Proceed with installation only after unsatisfactory conditions have been corrected.

3.2 PREPARATION

A. Surface Cleaning of Joints: Before installing joint sealants, clean out joints immediately to comply with joint-sealant manufacturer's written instructions.
   1. Remove all foreign material from joint substrates that could interfere with adhesion of joint sealant, including dust, old joint sealants, oil, grease, waterproofing, water repellents, water, surface dirt, and frost.

B. Joint Priming: Prime joint substrates where indicated or where recommended in writing by joint-sealant manufacturer, based on preconstruction joint-sealant-substrate tests or prior experience. Apply primer to comply with joint-sealant manufacturer's written instructions. Confine primers to areas of joint-sealant bond; do not allow spillage or migration onto adjoining surfaces.

3.3 INSTALLATION OF JOINT SEALANTS

A. Comply with joint-sealant manufacturer's written installation instructions for products and applications indicated unless more stringent requirements apply.

B. Joint-Sealant Installation Standard: Comply with recommendations in ASTM C 1193 for use of joint sealants as applicable to materials, applications, and conditions.

C. Install joint-sealant backings to support joint sealants during application and at position required to produce cross-sectional shapes and depths of installed sealants relative to joint widths that allow optimum sealant movement capability.
   1. Do not leave gaps between ends of joint-sealant backings.
   2. Do not stretch, twist, puncture, or tear joint-sealant backings.
   3. Remove absorbent joint-sealant backings that have become wet before sealant application and replace them with dry materials.

D. Install joint sealants immediately following backing installation, using proven techniques that comply with the following:

1. Place joint sealants so they fully contact joint substrates.
2. Completely fill recesses in each joint configuration.
3. Produce uniform, cross-sectional shapes and depths relative to joint widths that allow optimum sealant movement capability.

E. Tooling of Nonsag Joint Sealants: Immediately after joint-sealant application and before skinning or curing begins, tool sealants according to the following requirements to form smooth, uniform beads of configuration indicated; to eliminate air pockets; and to ensure contact and adhesion of sealant with sides of joint:
1. Remove excess joint sealant from surfaces adjacent to joints.
2. Use tooling agents that are approved in writing by joint-sealant manufacturer and that do not discolor sealants or adjacent surfaces.

F. Provide joint configuration to comply with joint-sealant manufacturer's written instructions unless otherwise indicated.

3.4 CLEANING AND PROTECTION

A. Clean off excess joint sealant as the Work progresses, by methods and with cleaning materials approved in writing by joint-sealant manufacturers. Dust joints with silica sand.

B. Protect joint sealants, during and after curing period, from contact with contaminating substances and from damage resulting from construction operations or other causes so sealants are without deterioration or damage at time of Substantial Completion. If, despite such protection, damage or deterioration occurs, cut out and remove damaged or deteriorated joint sealants immediately and replace with joint sealant so installations in repaired areas are indistinguishable from the original work.

END OF SECTION

SECTION 321716 - MANUFACTURED TRAFFIC-CALMING DEVICES

PART 1 - GENERAL

1.1 SUMMARY

A. Section includes manufactured traffic-calming devices.

PART 2 - PRODUCTS

PART 3 - EXECUTION

3.1 EXAMINATION

A. Verify that pavement is in suitable condition to begin installation according to manufacturer's written instructions.

B. Proceed with installation only after unsatisfactory conditions have been corrected.

3.2 INSTALLATION

A. General: Install manufactured traffic-calming devices according to manufacturer's written instructions unless otherwise indicated.

END OF SECTION

SECTION 321723 - PAVEMENT MARKINGS

PART 1 - GENERAL

1.1 SUMMARY

A. Section Includes:
   1. Painted markings applied to asphalt paving.
   2. Painted markings applied to concrete surfaces.

1.2 FIELD CONDITIONS

A. Environmental Limitations: Proceed with pavement marking only on clean, dry surfaces and at a minimum ambient or surface temperature of 55 deg F, and not exceeding 95 deg F.

PART 2 - PRODUCTS

2.1 PERFORMANCE REQUIREMENTS

A. Accessibility Standard: Comply with applicable provisions in the ABA standa vrds of the Federal agency having jurisdiction.

PART 3 - EXECUTION

3.1 EXAMINATION

A. Verify that pavement-marking substrate is dry and in suitable condition to begin pavement marking in accordance with manufacturer's written instructions.

B. Proceed with pavement marking only after unsatisfactory conditions have been corrected.

3.2 PAVEMENT MARKING

A. Do not apply pavement-marking paint until layout, colors, and placement have been verified with Architect.

B. Allow asphalt paving or concrete surfaces to age for a minimum of 14 days before starting pavement marking.

C. Sweep and clean surface to eliminate loose material and dust.

D. Apply paint with mechanical equipment to produce pavement markings, of dimensions indicated, with uniform, straight edges. Apply at manufacturer's recommended rates to provide a minimum wet film thickness of 15 mils.
   1. Apply graphic symbols and lettering with paint-resistant, die-cut stencils, firmly secured to asphalt paving or concrete surface. Mask an extended area beyond edges of each stencil to prevent paint application beyond stencil. Apply paint so that it cannot run beneath stencil.
   2. Broadcast glass beads uniformly into wet markings at a rate of 6 lb/gal..

3.3 PROTECTING AND CLEANING

A. Protect pavement markings from damage and wear during remainder of construction period.

B. Clean spillage and soiling from adjacent construction using cleaning agents and procedures recommended by manufacturer of affected construction.

END OF SECTION

SECTION 323113 - CHAIN LINK FENCES AND GATES

PART 1 - GENERAL

1.1 SUMMARY

A. Section Includes:
   1. Chain-link fences.
   2.

1.2 PREINSTALLATION MEETINGS

A. Preinstallation Conference: Conduct conference at Project site.
   1. Inspect and discuss electrical roughing-in, equipment bases, and other preparatory work specified elsewhere.
   2. Review sequence of operation for each type of gate operator.
   3. Review coordination of interlocked equipment specified in this Section and elsewhere.
   4. Review required testing, inspecting, and certifying procedures.

1.3 ACTION SUBMITTALS

A. Product Data: For each type of product.
   1. Include construction details, material descriptions, dimensions of individual components and profiles, and finishes for the following:
      a. Fence and gate posts, rails, and fittings.
      b. Chain-link fabric, reinforcements, and attachments.
      c. Accessories.
      d. Gates and hardware.

1.4 INFORMATIONAL SUBMITTALS

A. Delegated-Design Submittal: For structural performance of chain-link fence and gate frameworks, including analysis data signed and sealed by the qualified professional engineer responsible for their preparation.

1.5 FIELD CONDITIONS

A. Field Measurements: Verify layout information for chain-link fences and gates shown on Drawings in relation to property survey and existing structures. Verify dimensions by field measurements.

1.6 WARRANTY

A. Special Warranty: Installer agrees to repair or replace components of chain-link fences and gates that fail in materials or workmanship within specified warranty period.
   1. Failures include, but are not limited to, the following:
      a. Failure to comply with performance requirements.
      b. Deterioration of metals, metal finishes, and other materials beyond normal weathering.
      c. Faulty operation of gate operators and controls.
   2. Warranty Period: Fiveyears from date of Substantial Completion.

PART 2 - EXECUTION

2.1 EXAMINATION

A. Examine areas and conditions, with Installer present, for compliance with requirements for a certified survey of property lines and legal boundaries, site clearing, earthwork, pavement work, and other conditions affecting performance of the Work.
   1. Do not begin installation before final grading is completed unless otherwise permitted by Architect.

B. Proceed with installation only after unsatisfactory conditions have been corrected.

2.2 PREPARATION

A. Stake locations of fence lines, gates, and terminal posts. Do not exceed intervals of 500 feet or line of sight between stakes. Indicate locations of utilities, lawn sprinkler system, underground structures, benchmarks, and property monuments.

2.3 CHAIN-LINK FENCE INSTALLATION

A. Install chain-link fencing according to ASTM F 567 and more stringent requirements specified.
   1. Install fencing on established boundary lines inside property line.

B. Post Excavation: Drill or hand-excavate holes for posts to diameters and spacings indicated, in firm, undisturbed soil.

C. Post Setting: Set posts in concrete at indicated spacing into firm, undisturbed soil.
   1. Verify that posts are set plumb, aligned, and at correct height and spacing, and hold in position during setting with concrete or mechanical devices.
   2. Concrete Fill: Place concrete around posts to dimensions indicated and vibrate or tamp for consolidation. Protect aboveground portion of posts from concrete splatter.
      a. Exposed Concrete: Extend 2 inches above grade; shape and smooth to shed water.

D. Terminal Posts: Install terminal end, corner, and gate posts according to ASTM F 567 and terminal pull posts at changes in horizontal or vertical alignment of 15 degrees or more. For runs exceeding 500 feet, space pull posts an equal distance between corner or end posts.

E. Line Posts: Space line posts uniformly at 10 feet o.c.

F. Post Bracing and Intermediate Rails: Install according to ASTM F 567, maintaining plumb position and alignment of fence posts. Diagonally brace terminal posts to adjacent line posts with truss rods and turnbuckles. Install braces at end and gate posts and at both sides of corner and pull posts.
   1. Locate horizontal braces at midheight of fabric 72 inches or higher, on fences with top rail, and at two-third fabric height on fences without top rail. Install so posts are plumb when diagonal rod is under proper tension.

G. Top Rail: Install according to ASTM F 567, maintaining plumb position and alignment of fence posts. Run rail continuously through line post caps, bending to radius for curved runs and terminating into rail end attached to posts or post caps fabricated to receive rail at terminal posts. Provide expansion couplings as recommended in writing by fencing manufacturer.

H. Intermediate and Bottom Rails: Secure to posts with fittings.

I. Chain-Link Fabric: Apply fabric to inside of enclosing framework. Leave 1-inch bottom clearance between finish grade or surface and bottom selvage unless otherwise indicated. Pull fabric taut and tie to posts, rails, and tension wires. Anchor to framework so fabric remains under tension after pulling force is released.

J. Tension or Stretcher Bars: Thread through fabric and secure to end, corner, pull, and gate posts, with tension bands spaced not more than 15 inches o.c.

K. Tie Wires: Use wire of proper length to firmly secure fabric to line posts and rails. Attach wire at one end to chain-link fabric, wrap wire around post a minimum of 180 degrees, and attach other end to chain-link fabric according to ASTM F 626. Bend ends of wire to minimize hazard to individuals and clothing.
   1. Maximum Spacing: Tie fabric to line posts at 12 inches o.c. and to braces at 24 inches o.c.

L. Fasteners: Install nuts for tension bands and carriage bolts on the side of fence opposite the fabric side. Peen ends of bolts or score threads to prevent removal of nuts.

2.4 GATE INSTALLATION

A. Install gates according to manufacturer's written instructions, level, plumb, and secure for full opening without interference. Attach fabric as for fencing. Attach hardware using tamper-resistant or concealed means. Install ground-set items in concrete for anchorage. Adjust hardware for smooth operation.

2.5 GATE-OPERATOR INSTALLATION

A. Install gate operators according to manufacturer's written instructions, aligned and true to fence line and grade.

B. Excavation: Hand-excavate holes for posts, pedestals, and equipment bases/pads, in firm, undisturbed soil to dimensions and depths and at locations according to gate-operator component manufacturer's written instructions and as indicated.

C. Ground electric-powered motors, controls, and other devices according to NFPA 70 and manufacturer's written instructions.

2.6 GROUNDING AND BONDING

A. Comply with requirements in Section 260526 "Grounding and Bonding for Electrical Systems."

B. Fence and Gate Grounding:
   1. Ground for fence and fence posts shall be a separate system from ground for gate and gate posts.
   2. Install ground rods and connections at maximum intervals of 1500 feet .

3. Fences within 100 Feet of Buildings, Structures, Walkways, and Roadways: Ground at maximum intervals of 750 feet .
4. Ground fence on each side of gates and other fence openings.
   a. Bond metal gates to gate posts.
   b. Bond across openings, with and without gates, except openings indicated as intentional fence discontinuities. Use No. 2 AWG wire and bury it at least 18 inches below finished grade.

C. Protection at Crossings of Overhead Electrical Power Lines: Ground fence at location of crossing and at a ground rod located a maximum distance of 150 feet on each side of crossing.

D. Fences Enclosing Electrical Power Distribution Equipment: Ground according to IEEE C2 unless otherwise indicated.

E. Grounding Method: At each grounding location, drive a grounding rod vertically until the top is 6 inches below finished grade. Connect rod to fence with No. 6 AWG conductor. Connect conductor to each fence component at grounding location.
   1. Make grounding connections to each barbed wire strand with wire-to-wire connectors designed for this purpose.
   2. Make grounding connections to each barbed tape coil with connectors designed for this purpose.

F. Connections:
   1. Make connections with clean, bare metal at points of contact.
   2. Make aluminum-to-steel connections with stainless-steel separators and mechanical clamps.
   3. Make aluminum-to-galvanized-steel connections with tin-plated copper jumpers and mechanical clamps.
   4. Make above-grade ground connections with mechanical fasteners.
   5. Make below-grade ground connections with exothermic welds.
   6. Coat and seal connections having dissimilar metals with inert material to prevent future penetration of moisture to contact surfaces.

G. Bonding to Lightning Protection System: Ground fence and bond fence grounding conductor to lightning protection down conductor or lightning protection grounding conductor according to NFPA 780.

H. Comply with requirements in Section 264113 "Lightning Protection for Structures."

2.7 ADJUSTING

A. Gates: Adjust gates to operate smoothly, easily, and quietly, free of binding, warp, excessive deflection, distortion, nonalignment, misplacement, disruption, or malfunction, throughout entire operational range. Confirm that latches and locks engage accurately and securely without forcing or binding.

B. Automatic Gate Operator: Energize circuits to electrical equipment and devices, start units, and verify proper motor rotation and unit operation.
   1. Hydraulic Operator: Purge operating system, adjust pressure and fluid levels, and check for leaks.
   2. Test and adjust operators, controls and safety devices. Replace damaged and malfunctioning controls and equipment.
   3. Lubricate operator and related components.

C. Lubricate hardware and other moving parts.

2.8 DEMONSTRATION

A. Engage a factory-authorized service representative to train Owner's maintenance personnel to adjust, operate, and maintain chain-link fences and gates.

END OF SECTION

SECTION 323119 - DECORATIVE METAL FENCES AND GATES

PART 1 - GENERAL

1.1 SUMMARY

A. Section Includes:
   1. Decorative steel fences.

1.2 PREINSTALLATION MEETINGS

A. Preinstallation Conference: Conduct conference at Project site.

1.3 ACTION SUBMITTALS

A. Shop Drawings: For gates.
   1. Include plans, elevations, sections, gate locations, post spacing, and mounting details.

B. Delegated-Design Submittal: Refer to Section 013573 "Delegated Design Requirements and Procedures" for delegated design submittal procedures and requirements.
   1. Provide delegated-design submittals for structural performance of decorative metal fence and gate frameworks.
   2. Shop drawings shall meet content and format requirements for building permit submission as required by authorities having jurisdiction.

1.4 QUALITY ASSURANCE

A. Installer Qualifications: Fabricator of products.

PART 2 - PRODUCTS

2.1 PERFORMANCE REQUIREMENTS

A. Delegated Design: Engage a registered design professional, as defined in Section 013573 "Delegated Design Requirements and Procedures" to design fences and gates and support structure.
   1. Material properties indicated in this Section shall be considered as minimum properties.

B. Wind Loading:
   1. Fence Height: as indicated on Drawings.
   2. Wind Exposure Category: as indicated on Structural Drawings.
   3. Design Wind Speed: as indicated on Structural Drawings.
   4. Design Wind Pressure: as indicated on Structural Drawings.

2.2 DECORATIVE METALLIC-COATED-STEEL TUBULAR PICKET FENCES

A. Decorative Metallic-Coated-Steel Tubular Picket Fences: Comply with ASTM F 2408 for light industrial (commercial) application (class) unless otherwise indicated.
   1. Basis-of-Design Product: Subject to compliance with requirements, provide product indicated on Drawingsor comparable product by one of the following:
      a. Ameristar Fence Products.
      b. BetaFence USA LLC.
      c. Fortress Iron.
      d. Iron Eagle Industries, Inc.

e. Iron World Manufacturing, LLC.
f. Master Halco.
g. Merchants Metals.
h. Virginia Railing and Gates, LLC.
i. Xcel Fence.

B. Posts:
1. End , Corner Posts, Swing Gate openings, and Horizontal Slide Gate Openings: Provide posts of shape sections indicated on Drawings with size, wall thickness and material as required to meet specified performance requirements.

C. Posts:
1. Posts at Swing Gate Openings: Square steel tubing 3 by 3 inches102 by 102 mm with 3/16-inch wall thickness..

D. Rails: Square tubes.
1. Provide rails of shape sections indicated on Drawings with size, wall thickness and material as required to meet specified performance requirements.

E. Pickets: Square tubes.
1. Provide pickets of shape sections indicated on Drawings with size, wall thickness and material as required to meet specified performance requirements.
2. Picket Spacing: 4 inches clear, maximum.

2.3 DECORATIVE STEEL FENCES

A. Decorative Steel Fences: Fences made from steel tubing.

B. Posts: Square steel tubing.
1. Line Posts: 2 by 2 inches with 1/8-inch wall thickness.
2. End and Corner Posts: 2-1/2 by 2-1/2 inches with 3/16-inch wall thickness.
3. Swing Gate Posts: 3 by 3 inches with 3/16-inch wall thickness.
4. Horizontal-Slide Gate Post, Openings up to 12 Feet: 3 by 3 inches with 3/16-inch wall thickness.
5. Horizontal-Slide Gate Post, Openings Wider Than 12 Feet: 4 by 4 inches with 3/16-inch wall thickness.
6. Guide Posts for Class 1 Horizontal-Slide Gates: 4 by 4 inches with 3/16-inch wall thickness; installed adjacent to gate post to permit gate to slide in space between.

C. Post Caps: Formed from steel sheet.

D. Rails: Provide posts of shape sections indicated with size, wall thickness and material as required to meet specified performance requirements.

E. Pickets: Decorative steel bars of pattern and size indicated.

2.4 SWING GATES

A. Gate Configuration: As indicated.

B. Gate Frame Height: As indicated .

C. Gate Opening Width: As indicated.

PART 3 - EXECUTION

3.1 EXAMINATION

A. Examine areas and conditions, with Installer present, for compliance with requirements for site clearing, earthwork, pavement work, construction layout, and other conditions affecting performance of the Work.

B. Do not begin installation before final grading is completed unless otherwise permitted by Architect.

C. Proceed with installation only after unsatisfactory conditions have been corrected.

3.2 PREPARATION

A. Stake locations of fence lines, gates, and terminal posts. Do not exceed intervals of 500 feet or line of sight between stakes. Indicate locations of utilities, lawn sprinkler system, underground structures, benchmarks, and property monuments.
   1. Construction layout and field engineering are specified in Section 017300 "Execution."

3.3 DECORATIVE FENCE INSTALLATION

A. Install fences according to manufacturer's written instructions.

B. Install fences by setting posts as indicated and fastening rails and infill panels to posts. Peen threads of bolts after assembly to prevent removal.

C. Post Excavation: Drill or hand-excavate holes for posts in firm, undisturbed soil. Excavate holes to a diameter of not less than 4 times post size and a depth of not less than 24 inches plus 3 inches for each foot or fraction of a foot that fence height exceeds 4 feet.

D. Post Setting: Set posts in concrete at indicated spacing into firm, undisturbed soil.
   1. Verify that posts are set plumb, aligned, and at correct height and spacing, and hold in position during setting with concrete or mechanical devices.
   2. Space posts uniformly 1.83 m2.44 mas shown on drawings.

3.4 GATE INSTALLATION

A. Install gates according to manufacturer's written instructions, level, plumb, and secure for full opening without interference. Attach hardware using tamper-resistant or concealed means. Install ground-set items in concrete for anchorage. Adjust hardware for smooth operation and lubricate where necessary.

3.5 GATE OPERATOR INSTALLATION

A. General: Install gate operators according to manufacturer's written instructions, aligned and true to fence line and grade.

B. Excavation for Support Posts Concrete Bases: Hand-excavate holes for bases in firm, undisturbed soil to dimensions and depths and at locations as required by gate operator component manufacturer's written instructions and as indicated.

C. Comply with NFPA 70 and manufacturer's written instructions for grounding of electric-powered motors, controls, and other devices.

3.6 GROUNDING AND BONDING

A. Comply with Section 260526 “Grounding and Bonding for Electrical Systems.”

B. Fence Grounding: Install at maximum intervals of 1500 feet except as follows:
   1. Fences within 100 Feet of Buildings, Structures, Walkways, and Roadways: Ground at maximum intervals of 750 feet
      a. Gates and Other Fence Openings: Ground fence on each side of opening.
         1) Bond metal gates to gate posts.
         2) Bond across openings, with and without gates, except at openings indicated as intentional fence discontinuities. Use No. 2 AWG wire and bury it at least 18 inches below finished grade.

C. Protection at Crossings of Overhead Electrical Power Lines: Ground fence at location of crossing and at a maximum distance of 150 feet on each side of crossing.

D. Fences Enclosing Electrical Power Distribution Equipment: Ground as required by IEEE C2 unless otherwise indicated.

E. Grounding Method: At each grounding location, drive a grounding rod vertically until the top is 6 inches below finished grade. Connect rod to fence with No. 6 AWG conductor. Connect conductor to each fence component at grounding location.

F. Bonding Method for Gates: Connect bonding jumper between gate post and gate frame.

G. Connections: Make connections so possibility of galvanic action or electrolysis is minimized. Select connectors, connection hardware, conductors, and connection methods so metals in direct contact are galvanically compatible.
   1. Use electroplated or hot-tin-coated materials to ensure high conductivity and to make contact points closer in order of galvanic series.
   2. Make connections with clean, bare metal at points of contact.
   3. Make aluminum-to-steel connections with stainless-steel separators and mechanical clamps.
   4. Make aluminum-to-galvanized-steel connections with tin-plated copper jumpers and mechanical clamps.
   5. Coat and seal connections having dissimilar metals with inert material to prevent future penetration of moisture to contact surfaces.

H. Bonding to Lightning-Protection System: If fence terminates at lightning-protected building or structure, ground the fence and bond the fence grounding conductor to lightning-protection down conductor or lightning-protection grounding conductor, complying with NFPA 780.

3.7 ADJUSTING

A. Gates: Adjust gates to operate smoothly, easily, and quietly, free of binding, warp, excessive deflection, distortion, nonalignment, misplacement, disruption, or malfunction, throughout entire operational range. Confirm that latches and locks engage accurately and securely without forcing or binding.

B. Automatic Gate Operators: Energize circuits to electrical equipment and devices. Adjust operators, controls, safety devices, alarms, and limit switches.

1. Hydraulic Operators: Purge operating system, adjust pressure and fluid levels, and check for leaks.
2. Operational Test: After electrical circuitry has been energized, start units to confirm proper motor rotation and unit operation.
3. Test and adjust controls, alarms, and safeties. Replace damaged and malfunctioning controls and equipment.

C. Lubricate hardware**,** gate operators, and other moving parts.

3.8 DEMONSTRATION

A. Engage a factory-authorized service representative to train Owner's personnel to adjust, operate, and maintain gates.

END OF SECTION

SECTION 323213 - CAST-IN-PLACE CONCRETE RETAINING WALLS

PART 1 - DESCRIPTION

1.1 GENERAL

A. Cast-in-place concrete retaining walls shall conform to the requirements of the Maricopa Association of Governments Uniform Standard Specifications for Public Works Construction, 2025 Revision to the 2020 Edition:

B. Concrete Structures, Section 505

C. Related sections in Part 700, Materials.

1.2 RELATED SECTIONS

A. Section 312213 - Rough Grading

B. Section 312300 - Excavation and Fill

C. Section 312316.16 - Structural Excavation for Minor Structures

D. Section 312323.13 - Backfill

E. Section 321123 - Aggregate Base Courses

F. Construction Drawings

PART 2 - PRODUCTS - NOT USED

PART 3 - EXECUTION - NOT USED

END OF SECTION

SECTION 324020 - PIPE AND TUBE RAILINGS

PART 1 - GENERAL

1.1 SUMMARY

A. Section Includes:
   1. Steel pipe and tube railings.
   2. Stainless-steel pipe and tube railings.

B. Related Requirements:
   1. Section 013573 "Delegated Design Requirements and Procedures" for definitions, submittal procedures, responsibilities, and scheduling requirements associated with delegated design assignment indicated in this Section.

1.2 COORDINATION

A. Coordinate selection of shop primers with topcoats to be applied over them. Comply with paint and coating manufacturers' written recommendations to ensure that shop primers and topcoats are compatible with one another.

B. Coordinate installation of anchorages for railings. Furnish setting drawings, templates, and directions for installing anchorages, including sleeves, concrete inserts, anchor bolts, and items with integral anchors, that are to be embedded in concrete or masonry. Deliver such items to Project site in time for installation.

C. Schedule installation so wall attachments are made only to completed walls. Do not support railings temporarily by any means that do not satisfy structural performance requirements.

1.3 REFERENCES

A. ASTM International, as referenced herein as ASTM.

B. United States defense standard, as referenced herein as MIL.

C. American Welding Society, as referenced herein as AWS.

1.4 ACTION SUBMITTALS

A. Product Data: For the following:
   1. Manufacturer's product lines of mechanically connected railings.
   2. Railing brackets.
   3. Grout, anchoring cement, and paint products.

B. Shop Drawings: Include plans, elevations, sections, details, and attachments to other work.

C. Samples: For each type of exposed finish required.
   1. Assembled Sample of railing system, made from full-size components, including top rail, post, handrail, and infill. Sample need not be full height.

D. Delegated-Design Submittal: Refer to Section 013573 "Delegated Design Requirements and Procedures" for delegated design submittal procedures and requirements.
   1. Provide delegated-design submittals for railings.

2. Shop drawings shall meet content and format requirements for building permit submission as required by authorities having jurisdiction.

1.5 QUALITY ASSURANCE

A. Welding Qualifications: Qualify procedures and personnel according to the following:
1. AWS D1.1/D1.1M, "Structural Welding Code - Steel."
2. AWS D1.6/D1.6M, "Structural Welding Code - Stainless Steel."

1.6 DELIVERY, STORAGE, AND HANDLING

A. Protect mechanical finishes on exposed surfaces from damage by applying a strippable, temporary protective covering before shipping.

1.7 FIELD CONDITIONS

A. Field Measurements: Verify actual locations of walls and other construction contiguous with metal fabrications by field measurements before fabrication.

PART 2 - PRODUCTS

2.1 PERFORMANCE REQUIREMENTS

A. Delegated Design: Engage a registered design professional, as defined in Section 013573 "Delegated Design Requirements and Procedures" to design railings, including attachment to building construction.
1. Material properties indicated in this Section shall be considered as minimum properties.

B. Structural Performance: Railings, including attachment to building construction, shall withstand the effects of gravity loads and the following loads and stresses within limits and under conditions indicated:
1. Handrails and Top Rails of Guards:
a. Uniform load of 50 lbf/ ft. applied in any direction.
b. Concentrated load of 200 lbf applied in any direction.
c. Uniform and concentrated loads need not be assumed to act concurrently.
2. Infill of Guards:
a. Concentrated load of 50 lbf applied horizontally on an area of 1 sq. ft..
b. Infill load and other loads need not be assumed to act concurrently.

C. Thermal Movements: Allow for thermal movements from ambient and surface temperature changes.
1. Temperature Change: 120 deg F, ambient; 180 deg F..

2.2 METALS, GENERAL

A. Metal Surfaces, General: Provide materials with smooth surfaces, without seam marks, roller marks, rolled trade names, stains, discolorations, or blemishes.

B. Brackets, Flanges, and Anchors: Cast or formed metal of same type of material and finish as supported rails unless otherwise indicated.
1. Provide type of bracket with flange tapped for concealed anchorage to threaded bolt and that provides 1-1/2-inch clearance from inside face of handrail to finished wall surface.

2.3 STEEL AND IRON

A. Recycled Content of Steel Products: Postconsumer recycled content plus one-half of preconsumer recycled content not less than 25 percent.

B. Tubing: ASTM A 500 (cold formed) or ASTM A 513.

C. Pipe: ASTM A 53/A 53M, Type F or Type S, Grade A, Standard Weight (Schedule 40), unless another grade and weight are required by structural loads.

D. Plates, Shapes, and Bars: ASTM A 36/A 36M.

2.4 STAINLESS STEEL

A. Tubing: ASTM A 554, Grade MT 316L.

B. Pipe: ASTM A 312/A 312M, Grade TP 316L.

2.5 FASTENERS

A. General: Provide the following:
   1. Ungalvanized-Steel Railings: Plated steel fasteners complying with ASTM B 633 or ASTM F 1941, Class Fe/Zn 5 for zinc coating.
   2. Stainless-Steel Railings: Type 316 stainless-steel fasteners.

B. Fasteners for Interconnecting Railing Components:
   1. Provide concealed fasteners for interconnecting railing components and for attaching them to other work, unless exposed fasteners are unavoidable or are the standard fastening method for railings indicated.

2.6 MISCELLANEOUS MATERIALS

A. Nonshrink, Nonmetallic Grout: Factory-packaged, nonstaining, noncorrosive, nongaseous grout complying with ASTM C 1107/C 1107M. Provide grout specifically recommended by manufacturer for exterior applications.

B. Anchoring Cement: Factory-packaged, nonshrink, nonstaining, hydraulic-controlled expansion cement formulation for mixing with water at Project site to create pourable anchoring, patching, and grouting compound.
   1. Water-Resistant Product: At exterior locations and where indicated provide formulation that is resistant to erosion from water exposure without needing protection by a sealer or waterproof coating and that is recommended by manufacturer for exterior use.

2.7 FABRICATION

A. General: Fabricate railings to comply with requirements indicated for design, dimensions, member sizes and spacing, details, finish, and anchorage, but not less than that required to support structural loads.

B. Shop assemble railings to greatest extent possible to minimize field splicing and assembly. Disassemble units only as necessary for shipping and handling limitations. Clearly mark units for reassembly and coordinated installation. Use connections that maintain structural value of joined pieces.

C. Cut, drill, and punch metals cleanly and accurately. Remove burrs and ease edges to a radius of approximately 1/32 inch unless otherwise indicated. Remove sharp or rough areas on exposed surfaces.

D. Form work true to line and level with accurate angles and surfaces.

E. Fabricate connections that are exposed to weather in a manner that excludes water. Provide weep holes where water may accumulate.

F. Cut, reinforce, drill, and tap as indicated to receive finish hardware, screws, and similar items.

G. Connections: Fabricate railings with welded connections unless otherwise indicated.

H. Welded Connections: Cope components at connections to provide close fit, or use fittings designed for this purpose. Weld all around at connections, including at fittings.
   1. Use materials and methods that minimize distortion and develop strength and corrosion resistance of base metals.
   2. Obtain fusion without undercut or overlap.
   3. Remove flux immediately.
   4. At exposed connections, finish exposed surfaces smooth and blended so no roughness shows after finishing and welded surface matches contours of adjoining surfaces.

I. For changes in direction made by bending, use jigs to produce uniform curvature for each repetitive configuration required. Maintain cross section of member throughout entire bend without buckling, twisting, cracking, or otherwise deforming exposed surfaces of components.

J. Close exposed ends of railing members with prefabricated end fittings.

K. Provide wall returns at ends of wall-mounted handrails unless otherwise indicated. Close ends of returns unless clearance between end of rail and wall is 1/4 inchor less.

L. Brackets, Flanges, Fittings, and Anchors: Provide wall brackets, flanges, miscellaneous fittings, and anchors to interconnect railing members to other work unless otherwise indicated.

M. Provide inserts and other anchorage devices for connecting railings to concrete or masonry work. Fabricate anchorage devices capable of withstanding loads imposed by railings. Coordinate anchorage devices with supporting structure.

2.8 STAINLESS-STEEL FINISHES

A. Remove tool and die marks and stretch lines, or blend into finish.

B. Grind and polish surfaces to produce uniform, directionally textured, polished finish indicated, free of cross scratches.Run grain with long dimension of each piece.

C. Dull Satin Finish: No. 6.

D. When polishing is completed, passivate and rinse surfaces. Remove embedded foreign matter and leave surfaces chemically clean.

PART 3 - EXECUTION

3.1 INSTALLATION, GENERAL

A. Fit exposed connections together to form tight, hairline joints.

B. Perform cutting, drilling, and fitting required for installing railings. Set railings accurately in location, alignment, and elevation; measured from established lines and levels and free of rack.
   1. Do not weld, cut, or abrade surfaces of railing components that are coated or finished after fabrication and that are intended for field connection by mechanical or other means without further cutting or fitting.
   2. Set posts plumb within a tolerance of 1/16 inch in 3 feet.
   3. Align rails so variations from level for horizontal members and variations from parallel with rake of steps and ramps for sloping members do not exceed 1/4 inch in 12 feet.

C. Control of Corrosion: Prevent galvanic action and other forms of corrosion by insulating metals and other materials from direct contact with incompatible materials.
   1. Coat, with a heavy coat of bituminous paint, concealed surfaces of aluminum that are in contact with grout, concrete, masonry, wood, or dissimilar metals.

D. Adjust railings before anchoring to ensure matching alignment at abutting joints.

E. Fastening to In-Place Construction: Use anchorage devices and fasteners where necessary for securing railings and for properly transferring loads to in-place construction.

3.2 RAILING CONNECTIONS

A. Nonwelded Connections: Use mechanical or adhesive joints for permanently connecting railing components. Seal recessed holes of exposed locking screws using plastic cement filler colored to match finish of railings.

B. Welded Connections: Use fully welded joints for permanently connecting railing components. Comply with requirements for welded connections in "Fabrication" Article whether welding is performed in the shop or in the field.

C. Expansion Joints: Install expansion joints at locations indicated but not farther apart than required to accommodate thermal movement. Provide slip-joint internal sleeve extending 2 inches beyond joint on either side, fasten internal sleeve securely to one side, and locate joint within 6 inches of post.

3.3 ANCHORING POSTS

A. Use metal sleeves preset and anchored into concrete for installing posts. After posts are inserted into sleeves, fill annular space between post and sleeve with nonshrink, nonmetallic grout or anchoring cement, mixed and placed to comply with anchoring material manufacturer's written instructions.

B. Form or core-drill holes not less than 5 inches deep and 3/4 inchlarger than OD of post for installing posts in concrete. Clean holes of loose material, insert posts, and fill annular space between post and concrete with nonshrink, nonmetallic groutor anchoring cement, mixed and placed to comply with anchoring material manufacturer's written instructions.

C. Leave anchorage joint exposed with1/8-inch buildup, sloped away from post .

D. Anchor posts to metal surfaces with oval flanges, angle type, or floor type as required by conditions, connected to posts and to metal supporting members as follows:
   1. For aluminum pipe railings, attach posts using fittings designed and engineered for this purpose.
   2. For stainless-steel pipe railings, weld flanges to post and bolt to supporting surfaces.
   3. For steel pipe railings, weld flanges to post and bolt to metal supporting surfaces.

E. Install removable railing sections, where indicated, in slip-fit metal sockets cast in concrete.

3.4 ATTACHING RAILINGS

A. Anchor railing ends at walls with round flanges anchored to wall construction and welded to railing ends.

B. Anchor railing ends to metal surfaces with flanges bolted to metal surfaces and welded to railing ends .

C. Attach railings to wall with wall brackets, except where end flanges are used. Locate brackets as indicated or, if not indicated, at spacing required to support structural loads.

D. Secure wall brackets and railing end flanges to building construction as follows:
   1. For concrete and solid masonry anchorage, use drilled-in expansion shields and hanger or lag bolts.
   2. For hollow masonry anchorage, use toggle bolts.

3.5 ADJUSTING AND CLEANING

A. Clean stainless steel by washing thoroughly with clean water and soap and rinsing with clean water.

B. Touchup Painting: Immediately after erection, clean field welds, bolted connections, and abraded areas of shop paint, and paint exposed areas with the same material as used for shop painting to comply with SSPC-PA 1 requirements for touching up shop-painted surfaces.
   1. Apply by brush or spray to provide a minimum 2.0-mil dry film thickness.

C. Galvanized Surfaces: Clean field welds, bolted connections, and abraded areas, and repair galvanizing to comply with ASTM A 780/A 780M.

3.6 PROTECTION

A. Protect finishes of railings from damage during construction period with temporary protective coverings approved by railing manufacturer. Remove protective coverings at time of Substantial Completion.

END OF SECTION

SECTION 328000 - IRRIGATION SYSTEM

PART 1 - GENERAL

1.1 SUMMARY

A. Section includes specifications and general provision for automatic irrigation system using reclaimed water supply.

1.2 QUALITY ASSURANCE AND WARRANTY

A. The Contractor warrants to the Owner that the materials used and furnished for the project will be new and that the work will be good quality and free from defects for a period of one year from the date of final acceptance by the Owner.

B. For a period of one year from the date of final acceptance of the work performed under this contract, the Contractor shall promptly furnish, without cost to the Owner, any and all parts and labor that should prove to be defective in material or workmanship.

1.3 JOB CONDITIONS

A. Examine work in place on which this work is dependent. Defects which may influence the satisfactory completion and performance of this work shall be corrected in accordance with requirements of the applicable section of work prior to commencement of the work. Commencement of the work covered under this section shall be construed as the work in place being acceptable for satisfying the conditions of this section.

B. Protection: Protect the work and adjacent work against damage during the progress of the work.

1.4 SCOPE OF WORK

A. The work shall include all pipe, fittings, isolation valves, sprinkler heads, field wiring, pump station, concrete pump station support pads, irrigation controller, controller power wire, connection for power and other related items, as required to meet the provisions of this specification, and the plans for this project.

B. Irrigation system component submittals shall be approved by the Irrigation Consultant before the Contractor begins installation of the irrigation system.

C. Field staking of the irrigation system shall be the responsibility of Contractor. The irrigation consultant shall approve the field staking before the Contractor begins installation of the irrigation system.

D. Unless otherwise specified, the plans and specifications are intended to include everything obviously requisite and necessary for the proper installation and completion of the work whether each necessary item is mentioned herein or not.

E. The irrigation system shall be installed per the plans and specifications and not the way the contractor always does it.

1.5 IRRIGATION CONTRACTOR QUALIFICATIONS

A. The Irrigation Contractor shall have installed at least five (5) irrigation projects of similar size and scope within the last three years. The Contractor must submit, when requested, a listing of projects which meet this requirement along with the proper contact name, address and telephone number of the parties that can verify the information.

B. The Irrigation Contractor shall be certified by the Irrigation Association as a Certified Irrigation Contractor (CIC). The contractor shall provide with submittals, a copy of their CIC certificate.

C. The Contractor shall designate a competent project superintendent and any necessary assistants to oversee the project for the entire phase of the installation. The superintendent shall have the authority to represent the Contractor in their absence and all directives given to the superintendent shall be as binding as if given to Contractor.

1.6 CODES AND INSPECTIONS

A. The entire installation shall fully comply with all local and state laws and ordinances and with all the established codes applicable thereto. The Contractor shall be responsible for and take out all required permits, arrange for all necessary inspections and shall pay any fees and expenses in conjunction with the same as a part of the work under this contract.

1.7 TESTING THE SYSTEM

A. The Contractor shall conduct a pressure test on the irrigation system upon completion of construction.

B. This test shall consist of pressurizing the system to 100 and closing the pump station isolation valve. The pressure in the system shall not drop more than 10 psi in three hours.

1.8 DRAWINGS OF RECORD

A. After completion of the system installation, the Contractor shall furnish to the "Owner" "Drawings of Record" on D size paper showing all sprinkler heads, valves, wire splice boxes, pipelines, field controllers, and wire routes.

B. Dimensions from two fixed points for all main line isolation valves, zone valves, water reel connections and wire splice boxes will be required on the "Drawings of Record".

1.9 INSTRUCTIONS

A. After completion and testing of the system, the Contractor will instruct the Owner's personnel in the proper operation and maintenance of the system to the satisfaction of the Owner's grounds maintenance supervisor.

B. Two sets of instruction sheets and parts lists covering all equipment incorporated into two Owner's manuals bound in three ring binders.

PART 2 - PRODUCTS

2.1 SPRINKLER EQUIPMENT

A. All products shall bear reclaimed water supply identifiers.

B. Sprinklers shall perform with regards to the diameter of throw and volume at a given pressure as specified on the plans.

C. Electric zone valves shall be hydraulically operated diaphragm type and actuated via 24 VAC solenoid and digital single station decoder.

D. Quick coupler valves shall be bronze body with 1-inch IPS female thread inlet and a 1-inch key outlet and as manufactured by Hunter Industries or an approved equal. The contractor shall provide the Owner with four quick coupler keys equipped with 1 " fpt x 1" mht hose.

E. Sprinkler heads shall perform as specified on the plans.

F. Electric zone valves shall be as specified on the plans.

2.2 CONTROL SYSTEM

A. A single solid state controller utilizing zone valve decoders shall be installed to operate the irrigation system.

B. The controller shall have a maximum capacity of 72 stations with up to six separate communication paths.

C. The controller shall have the capacity to provide 6 independent programs with up to 6 starts per day per schedule.

D. The controller shall be programmable on either a time based 7 day cycle of selected intervals or sensor controlled to begin and terminate irrigation based on soil moisture levels.

E. The controller shall have a water budget feature adjustable from 20 to 300 percent.

F. The controller shall be contained in a wall mountable metal cabinet.

G. The automatic controller shall be as indicated on the plans and as manufactured by Hunter Industries or an approved equal.

H. The zone valve decoders shall single station units and compatible with the zone control valves and irrigation control system.

I. The controller shall include a wireless rain sensor compatible with the irrigation controller.

J. The control system shall include a hand held remote control package compatible with the irrigation control system.

2.3 WIRE AND FITTINGS

A. The decoder communication cable shall consist of two 14 gauge copper conductors. Each conductor shall be insulated with PVC and the pair contained in a high density polyethylene jacket suitable for direct burial.

B. All wire splices are to be made with full size wire nuts and moisture proof splice kits for use with three (3) wires maximum.

C. The decoder communication cable shall be equipped with ground electrodes per the plan and plan details. The ground electrodes shall be rod 5/8" by 8 foot copper clad ground rods. Connection of the decoder ground wire ground rod shall be completed with a copper acorn clamp.

D. All decoder cable shall be furnished in minimum 2,500' reels.

E. All decoder cable shall be as specified on the plans and as manufactured by Paige Electric, Regency Wire and Cable or approved equal.

F. The moisture proof wire splice kits shall be shall be 3M DBY-6 or approved equal.

2.4 PIPE AND FITTINGS

A. All products shall bear reclaimed water supply identifiers.

B. All pipe shall be manufactured from virgin polyvinyl chloride resin, and meet ASTM D1784, ASTM D2241, and Product Standard 22 for PVC pipe.

C. All PVC pipe shall be furnished in 20'-0" lengths. All 4 and 3-inch main line pipe shall with shall have one end belled for push joint connection and meet ASTM D3239 for joint and gasket specification. All 3-inch and smaller lateral line pipe shall have one end belled for solvent weld connection.

D. All PVC pipe shall be pressure rated @ 200# (PSI) for continuous service @ 73F. and meet SDR-21 dimension ratio for wall thickness.

E. All main line pipe fittings 3-inch and larger shall be ductile iron, bituminous coated type for gasket joint connection to the pipe. All lateral pipe fittings 3-inch and smaller shall be Schedule 40 pressure rated @ 200# (PSI), and constructed for solvent weld attachment to PVC pipe.

F. PVC gasket joint service tees may be used for connection of the zone control valves and quick coupler valves to the main line pipe.

G. All Schedule 40 fittings shall be full sized. Any required reduction of pipe size shall be accomplished with slip by slip or slip by female pipe thread reducer bushings. Molded reducing type fittings will not be accepted.

H. All sprinkler heads shall be installed with pre-assembled 0-ring type swing joints, with full 360 degree adjustment in three planes. Swing joints shall be as manufactured by Lasco, Spears or an approved equal.

I. All PVC pipe shall be as manufactured by Cresline, Eagle, Northern, Freedom or an approved equal.

J. The ductile iron fittings shall be as manufactured by Harrington Corporation or an approved equal. The PVC schedule 40 solvent weld fittings shall be as manufactured by Cresline, Spears, Lasco, or an approved equal.

2.5 VALVES AND ACCESS BOXES

A. All products shall bear reclaimed water supply identifiers.

B. All Isolation Valves shall be AWWA approved iron body resilient seal wedge disc, non-rising stem with a square operating nut and gasket joint hubs sized for IPS PVC pipe.

C. All isolation valves shall be as manufactured by American Flow Control, Waterous or an approved equal. The Contractor shall provide the Owner with two isolation valve operating keys.

D. Control valve boxes shall be a minimum of 10 inch diameter valve pits.

E. Quick coupler valve boxes shall be in 6-inch economy boxes.

F. Isolation, zone and quick coupler valve boxes shall be equipped with green lids. Wire splices and surge protection boxes shall be equipped with black lids.

G. Control and quick coupler valve boxes shall be per the plan details and as manufactured by Us Filter / Plymouth Products, Carson/Brooks or an approved equal.

PART 3 - EXECUTION

3.1 SPRINKLER EQUIPMENT

A. All sprinkler heads shall be installed per the manufacturer's instructions and the plan details.

B. Each quick coupler valve shall be installed per the manufacturer's instructions and the plan details.

3.2 CONTROLS

A. The controller shall be installed per the manufacturer's instruction and the plan details.

B. The automatic rain switches shall be located on the control enclosure and installed per the manufacturer's instructions.

C. Grounding and surge protection for the controllers shall be per the manufacturer's recommendations and the plan details.

3.3 WIRE AND FITTINGS

A. Control wire between field satellites and 24 VAC valve solenoids, may be laid in the opencut trench beside irrigation piping per the installation detail, down fed in the pipe pulling operation, or in a separate pulling operation. Control wire, when laid with pipe pulling operation must be "down fed" to minimize any tendency to stretchwire or PVC insulation.

B. Slack must be provided for expansion or contraction and tensile stress must be avoided during installation.

C. In the event a cable must be routed under a roadway, it shall be installed in a sleeve with the pipe.

3.4 PIPE AND FITTINGS

A. Installation for all PVC main line piping shall be open cut trench. A trace wire shall be installed with all trenched pipe.

B. Installation for all PVC lateral piping shall be either open cut trench or vibratory plow.

C. All PVC main line piping shall be a installed a minimum of 24 inches below surface grade.

D. All PVC piping lateral piping shall be a installed a minimum of 16 inches below surface grade.

E. All piping installed in an open cut trench is to be covered with the trench spoils.

F. Unsuitable excavated material shall be removed from the work area and disposed of on site by the Contractor.

G. All solvent weld joints are to be completed using a high etch PVC primer and a heavy body PVC cement.

H. All piping, valves and fittings are to be adequately supported, anchored, braced or strapped to withstand hydraulic thrust even though such supports are not shown on the drawings. Special attention shall be performed to ensure that the thrust block mass is adequate to restrain pipe, fitting, or valve movement.

I. All horizontal bends on main lines shall be buttressed with either poured concrete or concrete block at all changes of direction. Concrete buttress dimensions shall be determined in the field by the Irrigation Contractor.

J. Additional supports, as recommended by the pipe manufacturer, shall be installed to manufacturer's requirements.

K. Pipe interiors must be cleaned before installation and kept clean by the use of test plugs or duct tape.

L. It shall be the responsibility of the Contractor to provide adequate protection to compensate for expansion or contraction of the plowed pipe during installation. Plowed pipe should be provided with adequate time to adjust to ground temperature before any connections are made.

M. In the event a pipe must be routed under a walk or roadway, it shall be installed in a schedule 40 PVC sleeve.

N. The sleeves shall be one pipe size larger than the pipe it is to contain. If the sleeve is also contain wire, then it shall be two pipe sizes larger than the pipe it is to contain.

3.5 VALVES AND ACCESS BOXES

A. All valves and valve boxes shall be installed per the plan details.

B. Valve boxes shall be notched to fit over the pipe.

3.6 PUMP STATION(S)

A. The pump station and wet well shall be installed per the manufacturer's instructions and the plan details.

3.7 BACKFILL

A. Backfill shall be suitable excavated material free from rock and debris.

B. All trenches shall be settled by mechanically compacting in six inch layers immediately after the backfill has been placed. Care shall be taken not to disturb the pipe or its foundation.

C. All open trenches shall be filled the same day as they are opened except where required for continuation of work the following day. Pipe in open trenches shall be protected from damage or vandalism.

3.8 CLEANING THE PREMISES

A. The Contractor shall at all time keep the premises on which the work is being done, and the adjoining premises, clean of rubbish caused by their work.

B. Upon completion of the job, Contractor shall clean up all soil and debris caused by their work and leave the job in a neat and clean condition. All debris removed from the job shall be taken away from the premises at the Contractor's expense.

3.9 SYSTEM WINTERIZATION

A. This irrigation system is designed to be winterized by purging the water from the piping system and control valves through the sprinkler heads via the induction of high volume compressed air with a minimum 300 to 400 CFM air compressor.

B. After closing the water supply valve, a trailer mounted, gas driven compressor can be attached to the irrigation system main line.

C. As part of this contract, the Contractor shall winterize this system in the fall succeeding installation and put the system back into operation in the spring. The cost of renting the air compressor for winterizing the irrigation system shall be the responsibility of the Contractor.

D. This winterization and spring start up requirement shall be utilized to train the Owner's grounds maintenance personnel in the proper procedure of same.

END OF SECTION

SECTION 329100 - SOIL PREPARATION (TOPSOIL)

PART 1 - GENERAL

1.1 RELATED DOCUMENTS

A. Drawings and general provisions of the Contract, including General and Supplementary Conditions and Division 01 Specification Sections, apply to this Section.

1.2 SUMMARY

A. This section specifies all soil materials designated as "Topsoil" on the drawings or in the specifications. Supply topsoil for landscape work (seeding and planting) from on-site sources and supplement with off-site sources as needed.

B. Related Requirements:
   1. Section 329300 "Exterior Planting" for soil mixtures that include topsoil.

1.3 REFERENCES

A. ASTM International, as referenced herein as ASTM.

B. US Department of Agriculture (USDA) Handbook No. 60 – Diagnosis and Improvement of Saline and Alkali Soils.

1.4 ACTION SUBMITTALS

A. Source Quality Control:
   1. Material Test Reports: Conduct Topsoil testing for existing on-site surface topsoil and imported topsoil from off-site sources.
   2. Sample: Provide 1 quart samples for each topsoil test unit (including source).
   3. Conduct all topsoil sampling and testing prior to delivery from off-site sources, and prior to stripping and stockpiling from on-site sources.

1.5 INFORMATIONAL SUBMITTALS

A. Field Quality Control:
   1. Obtain samples, test materials and submit field test reports as described under Articles 2.1 and 3.1 below.
   2. Provide field report with date and documentation of amendment application.

1.6 QUALITY ASSURANCE

A. Qualifications:
   1. Soil-Testing Laboratory Qualifications: The contractor shall engage an independent laboratory or university laboratory, recognized by the State Department of Agriculture, with the experience and capability to conduct the testing indicated and that specializes in types of tests to be performed.

PART 2 - PRODUCTS

2.1 MATERIALS

A. Topsoil:
   1. Topsoil for landscape work shall be a fertile, friable, sandy loam or loam surface soil without admixture of subsoil screened to be free of stones grater than 1", stumps, root, trash, debris, and other materials deleterious to plant growth.

B. Chemical additives shall be agricultural grate, used as necessary to maintain a pH at 6.5 to 8.0. Topsoil that does not meet this pH range shall not be approved by the Architect.

C. Organic content shall not be less than 4 percent and not greater than 20%.

D. Clay content determined by Bouyoucous Hydrometer Test: between 5 percent and 15 percent.

E. Base percentages on dry weight of the sample

F. The use of manure of any kind is NOT permitted.

2.2 SOURCE QUALITY CONTROL:

A. Laboratory Test Reports:
1. Conduct topsoil testing for each soil test unit as follows:
   a. Existing off-site location(s): 1 sample per acre of site to be excavated.
   b. Existing on-site areas prior to stripping topsoil: 1 sample per acre of site to be excavated and each sub-area delineated by pavements, building and other site features that fragment the site into testing units less than 1 acre but larger than 0.25 acres in size.
   c. Existing stockpile: 1 sample per 1,000 cubic yards of stockpiled soil.
   d. Plant mixture: Plant mixture shall be tested twice. First - test topsoil as indicated above. Second - test plant mixture after integrating mixture ingredients as identified under Part 2 of Exterior Planting specification.
2. Submit all test reports for approval. Topsoil units that do not meet the soil requirements specified under this section will not be permitted for use as Topsoil.
3. Fertility: For each unamended soil type, test topsoil for organic materials, pH, phosphate, potash content, calcium, magnesium, zinc, iron, and manganese.
4. Physical Properties: Determine percent sand, silt and clay and textural classification (USDA) by hydrometer method. Identify all foreign materials such as rock, roots, and vegetation.
5. Test for and report presence of problem salts, minerals, or heavy metals, including aluminum, arsenic, barium, cadmium, chromium, cobalt, lead, lithium, and vanadium. If such problem materials are present, provide additional recommendations for corrective action. If any heavy metal exceeds state listed background levels for human contact, soils will not be approved for use on site.
6. Recommendations: Based on the test results, the independent testing laboratory shall state recommendations for soil treatments and soil amendments to be incorporated prior to seeding and planting. List recommendations in weight per 1000 square feet for lawn area and cubic yard of plant mixture. Recommendations shall include; nitrogen, phosphorus, and potash nutrients and all soil amendments required for the long-term growth of the specified plants and turf.
7. Sustainability Requirements:
   a. Restore all disturbed or compacted soils that will be revegated within the projects development footprint to met the following requirements:
      1) Soils must be reused for functions comparable to their original function.

2) Imported topsoils or soil blends designed to serve as topsoil may not include the following:
   a) Soils as defined regionally by the Natural Resources Conservation Service web soil survey as prime farmland, unique farmland, or farmland of statewide or local importance.
   b) Soils from other greenfield sites, unless those soils are a byproduct of a construction process.
3) Restored soil must meet the criteria of sites reference soils in:
   a) Organic matter
   b) Compaction
   c) Infiltration rates
   d) Soil biological function
   e) Soil chemical characteristics

b. Soil Testing Guidelines: Samples must be taken from soils that are disturbed or compacted and will be revegetated. If project site has more than one type of soil that will be revegetated, than multiple samples shall be taken for each type of soil. Soil sample tests may include the following components:
   1) Base: pH, Conductivity, Organic Matter
   2) Anions: Sulfer, Phosphorous, Nitrate-N
   3) Catlons: Potassium, Calcium, Magnesium, Sodium
   4) Minor Elements: Iron, Zinc, Manganese, Copper, Boron, Aluminum

PART 3 - EXECUTION

3.1 FIELD QUALITY CONTROL

A. Sampling: Each soil test unit shall be a composite of five to seven subsamples taken the full depth of proposed source for each acre of surface area. For on-site stockpiles, discard upper 6 inches of soil before sampling. For large stockpiles, partial excavation will be required for collection of representative samples. Include site plan verifying the locations of all topsoil sampling. Topsoil test reports shall be accompanied with each sample unit for review and approval by the Architect.

B. Testing methods and written recommendations when not references elsewhere, shall comply with USDA's Handbook No. 60. Nutrient data to be given in parts per million (ppm) dry soil.

C. Topsoil shall be as defined in ASTM D5268.

D. Soil pH shall be tested in accordance with ASTM D4972.

E. Test for organic material by using ASTM D2974.

END OF SECTION

SECTION 329220 - NATIVE SEEDING

PART 1 - GENERAL

1.1 SUMMARY

A. Section Includes: Procurement, scheduling, installation, maintenance, and warranty of all native seeding in accordance with the plans and as specified herein.

B. Related Requirements:
   1. Section 329100 "Topsoil" for topsoil for native seeded areas.
   2. Section 329300 "Exterior Plantings" for trees, shrubs, groundcovers, and other plants.

1.2 REFERENCES

A. Association of Official Seed Analysts, as referenced as AOSA.

B. Regulatory Requirements:
   1. Arizona State Seed Law.

1.3 ACTION SUBMITTALS

A. Product Data:
   1. Within 4 weeks following the issuance of the Notice to Proceed, submit name and location of seed supplier(s) and a complete list of each seed mix by weight and proportion that is being supplied before the seed mix is ordered. Substitutions will not be permitted unless reviewed and approved by Landvvscape Architect.
   2. Method of seeding, including all equipment to be used and manufacturer's specifications for care and handling.
   3. Tackifier: Manufacturer's specifications and recommended rates of application.

B. Source Quality Control:
   1. Certifications:
      a. Test Reports: Prior to delivery of products to the site, submit the following:
         1) Seed viability: Pure Live Seed (PLS) test reports for each species; tetrazolium (TZ) testing only conducted by a qualified independent testing laboratory.
         2) Seed purity: Test reports for each species.

C. Field Quality Control:
   1. Maintenance Plan: Prior to the issuance of Substantial Completion, submit detailed methodology and schedules for warranty maintenance of native seeded areas including irrigation, weed control, and invasive species eradication. See Part 1.7 "Maintenance". Coordinate native seeding maintenance with other applicable Sections (Planting, Irrigation, etc.).
   2. Maintenance Report Forms: Submit Maintenance Report Forms following completion of each maintenance visit. The forms shall cross-reference the Maintenance Plan. Payment for this work will only be made by the Owner when proof of completed work has been provided.

1.4 INFORMATION SUBMITTALS

A. Qualification Data:

1. Include a list of at least 3 similar projects completed in the last 5 years by Installer demonstrating Installer's capabilities and experience. Include project names, addresses, and year completed, and include names and addresses of owner's contact persons.
2. License certificate for pesticide applicators.

1.5 QUALITY ASSURANCE

A. Qualifications:
1. The work of this section (installation and maintenance) shall be performed by a Contractor specializing in native seeding and having a minimum of 5 years' experience in projects of the scope and scale being specified.

1.6 DELIVERY, STORAGE, AND HANDLING

A. All seeds shall be packaged and kept dry to ensure adequate protection against damage and to maintain dormancy while in transit, storage, or during planting operations.

B. All seed shall be delivered to the site in sealed containers and labeled, in compliance with the Federal Seed Act and applicable State laws.

C. Seed shall not be delivered and stored longer than 9 months before installation.

D. Herbicides and other chemicals delivered to site must be in clearly labeled, unopened containers showing weight, analysis, and name of manufacturer.

E. Straw mulch shall be stored off the ground under a cover that provides protection from moisture and humidity.

1.7 SCHEDULING

A. Seeding Season
1. Seeding of Native Seed Mix shall occur during in the early spring - April 1 through May 15.
2. Seeding of Native Seed Mix shall occur during the dormant winter months - November 15 through February 15.
   a. Do not apply onto snow-covered ground.
   b. If the site is final graded before the dormant season, following final grading approval, stabilize the site until seeding can occur with the erosion control seed mix listed below:
      1) May 15 through September 1: 96 pounds per acre of seed oats *(Avena sativa)*.
      2) September 1 through October 15: 90 pounds per acre winter wheat *(Triticum aestivum)* or Regreen Sterile Wheat/Wheatgrass Hybrid *(Triticum aestivum x Elytrigia elongatafrom)*.
3. Native Seed Mix – Two-step installation, Spring Seeding:
   a. Step 1: Installation of the Native Grasses Seed Mix shall occur between April 1, through May 15.
      1) Perform broadleaf herbicide applications as specified in to the Native Grasses seeded areas to eliminate broadleaf weeds.

b. Step 2: Installation of the Native Forbs Seed Mix shall occur one full year following installation of Native Grasses mix, following one full growing season of broadleaf herbicide treatment of the Native Grasses areas, in the spring between April 1, and May 15.

4. Native Seed Mix – Two-step installation, Dormant (Winter) Seeding:
   a. Step 1: Installation of the Native Grasses Seed Mix shall occur between November 15, and February 15.
      1) Perform broadleaf herbicide applications as specified in Part 1.9 to the Native Grasses seeded areas to eliminate broadleaf weeds.
   b. Do not apply onto snow-covered ground.
   c. If the site is final graded before the dormant season, following final grading approval, stabilize the site until seeding can occur with the erosion control seed mix listed below:
      1) May 15 through September 1: Mix of 32 pounds per acre of seed oats *(Avena sativa)* and 5 pounds per acre of annual rye *(Lollium multiflorum)*.
      2) September 1 through October 15: 20 pounds per acre winter wheat (Triticum aestivum) or Regreen Sterile Wheat/Wheatgrass Hybrid (Triticum aestivum x Elytrigia elongatafrom).
   d. Stept 2: Installation of the Native Forbs Seed Mix shall occur between November 15, and February 15. Do not apply onto snow-covered ground.
5. Native Seed Mix – Two-step installation, Spring and Dormant (Winter) Seeding:
   a. Step 1: Installation of the Native Grasses Seed Mix shall occur between April 1, through May 15.
      1) Perform broadleaf herbicide applications as specified in Part 1.9 to the Native Grasses seeded areas to eliminate broadleaf weeds.
   b. Step 2: Installation of the Native Forbs Seed Mix shall occur between November 15, and February 15. Do not apply onto snow-covered ground.

1.8 MAINTENANCE

A. Native Seed Mix:
   1. Site visits shall occur monthly during the first three growing seasons to assess site conditions and correct issues with erosion and weeds. Reports documenting these visits and any completed maintenance shall be submitted to Owner within two weeks following the visit.
   2. Seeded areas shall be inspected with the Owner twice annually during each of the first three growing seasons, including a late spring/early summer and an early fall inspection. Notify the Owner of the inspection no less than 2 weeks prior to an inspection. The inspections shall be performed with the Owner in attendance. A report of the findings shall be issued by Contractor including agreed upon maintenance required.
   3. First Year Maintenance:
      a. During the first growing season following seeding, mow the native seeded areas each time (up to 4 times) that the plant material (annual and perennial weeds) has reached a height of 12 to 16 inches tall. Mow to a height of 4 to 6 inches. A flail-type mower that will finely shred mowed clippings must be used. Alternatively, a string trimmer may be utilized but all clippings must be removed from the site following cutting.

b. Do not hand-pull any plants the first year following seeding because such action could disrupt small native seedlings.
c. Spot herbicide application for weed control: Spot treat aggressive weeds with an appropriate herbicide using **a** backpack sprayer with narrow stream nozzle, the wick applicator or soaked-glove method as appropriate for selective treatment of target species. All applications must be made by personnel that are licensed and certified to provide chemical applications and are knowledgeable in identification of native and weed species. All herbicides shall be applied in accordance with manufacturer label directions, including timing, mixing, application, storage, and clean-up.

4. Second Year Maintenance:
   a. During the second growing season, mow once in early June to a height of 12 inches and every time thereafter when the plants reach 24 inches tall. Do not let any annuals or biennials go to seed. A flail-type mower that will finely shred mowed clippings must be used. Alternatively, a string trimmer may be utilized but all clippings must be removed from the site following cutting.
   b. Remove all cut seed heads off-site.
   c. Provide spot herbicide application for weed control as outlined under First Year Maintenance.
5. Third Year Maintenance:
   a. Mow seeded area once in early spring when sugar maples are opening their buds, generally late April to early May. Mow to 2 inches and rake off cut material to expose the soil. Burning is an alternate option but is not covered in this Section.
   b. Do not mow again during the growing season.
   c. Provide spot herbicide application for weed control as outlined under First Year Maintenance.

B. Native Grasses Seed Mix Maintenance (Duration 2 years: 1st and 2nd years):
1. Mowing:
   a. During the first growing season (prior to dormancy) following seeding, mow the native seeded areas each time (up to 4 times) that the plant material (annual and perennial weeds) has reached a height of 12 to 16 inches tall. Mow to a height of 4 to 6 inches. A flail-type mower that will finely shred mowed clippings must be used. Alternatively, a string trimmer may be utilized but all clippings must be removed from the site following cutting.
   b. Do not hand-pull any plants the first year following seeding because such action could disrupt small native seedlings.
   c. During the second growing season, mow once in early June to a height of 12 inches and every time thereafter when the plants reach 24 inches tall. Do not let any annuals or biennials go to seed. A flail-type mower that will finely shred mowed clippings must be used. Alternatively, a string trimmer may be utilized but all clippings and seed heads must be removed from the site following cutting.
2. Herbicide – Year 1:

a. Following seeding with the Native Grasses Seed Mix, and in conjunction with the maintenance mowing, the Contractor shall apply post-emergent broadleaf herbicide to effectively control broadleaf weeds that appear in the newly seeded areas.
b. Before herbicide is applied, broadleaf weeds shall be clearly identified to determine which herbicide(s) to use that will have the greatest effect at controlling those weeds, and to determine the number of applications that will be necessary to control particular weed species.
c. Timing of post-emergent herbicide applications shall be such that the weeds to be controlled are actively growing so that the most effective control can be achieved. The proper timing recommended on the herbicide manufacturer's label must be strictly followed. However, timing shall also be coordinated with the required maintenance mowing. Follow manufacturer's label to determine the recommended wait period (usually a minimum of at least 7 days) before mowing the native seeded areas to which herbicide has been applied.
d. Herbicides shall be selected that will have no effect on the native grass species into which the herbicide is being applied.
e. The Contractor must follow the manufacturer's herbicide label precisely. No spraying over open water is permitted on any condition. No mixing or preparation of herbicides and no cleanup of equipment shall occur onsite. Upon completion of herbicide application, remove from the site and legally dispose of any remaining herbicide and related chemicals. The Owner accepts no responsibility for actions by the Contractor resulting from misuse of herbicides or failure to correctly follow the manufacturer's label, and all remediation costs shall be the responsibility of the contractor.

C. Native Forbs Seed Mix Maintenance (Duration 1 year: 2nd year only):
1. Following seeding with the Native Forbs Seed Mix, the Contractor shall continue to eradicate weed species using spot herbicide application only.
2. The mowing regimen shall be as outlined above for the Native Grasses Seed Mix.
3. Do not hand-pull any plants the first year following seeding of the Native Forbs Seed Mix because such action could disrupt small native seedlings.
4. Spot herbicide application for weed control: Spot treat aggressive weeds with an appropriate herbicide using a backpack sprayer with narrow stream nozzle, the wick applicator or soaked-glove method as appropriate for selective treatment of target species. All applications must be made by personnel that are licensed and certified to provide chemical applications and are knowledgeable in identification of native and weed species. All herbicides shall be applied in accordance with manufacturer label directions, including timing, mixing, application, storage, and clean-up.

D. Third Year Maintenance:
1. Mow seeded area once in early spring when sugar maples are opening their buds, generally late April to early May. Mow to 2 inches and rake off cut material to expose the soil. Burning is an alternate option but is not covered in this Section.
2. Do not mow again during the growing season.

3. Provide spot herbicide application for weed control as outlined under Second Year Maintenance.

PART 2 - PRODUCTS

PART 3 - EXECUTION

3.1 INSTALLATION

A. General:
1. Do not sow seed during adverse weather or when wind speeds exceed five miles per hour.
2. Do not sow seed in areas where standing water is present.

B. Grade Preparation:
1. Subgrade and finish grade preparation shall be in accordance with site earthwork requirements, and topsoil shall be a minimum **12 in**ches deep after light compaction to prevent settlement.
2. Prior to seeding, repair any ruts, rills, or gullies greater than 2 inches in depth to create smooth continuous grades for upland areas.
3. If the prepared grade is eroded or compacted by rainfall or other reasons, rework the topsoil to the full depth.
4. Immediately before seeding, scarify, loosen, float and drag topsoil as necessary to bring it to the proper condition. Remove foreign matter larger than 1-inch diameter.
5. No further grade preparation is required.

C. Layout:
1. All seeding zone boundaries shall be surveyed and staked on the project site by the Contractor. No seed mix shall be installed until the grade preparation and layout have been approved by the Landscape Architect.
2. The Landscape Architect reserves the right to adjust seed limits without adjusting total seeded areas, to meet field conditions, at no additional cost to the Owner.

D. Method:
1. Hand-broadcasting:
   a. For dormant seeding, the plant material from the previous growing season shall be cut to a maximum 6-inch height and cut material removed to allow the broadcast seed to make good soil contact. Seed can be sown directly into the cut plant stubble.
   b. For spring seeding, sow seed directly onto bare ground or ground where the previous year's plant stubble has been cut to 2-inch height and cut material removed.
   c. Increase the volume of the broadcasted seed mix by mixing it with an approved carrier. Acceptable carrier material includes moistened compost, peat moss, corn cob blast media, or coarse-grade vermiculite. Sand and sawdust are unacceptable carrier materials. Use one bushel basket of carrier per 1,000 square feet of area to be seeded (a bushel equals 8 gallons or 1.24 cubic feet).
   d. Use half of the total seed quantity and cross the entire area to be seeded, evenly spreading the seed. Walk perpendicular to the original seeding and evenly broadcast the second half of the seed.

e. Light seeds, awned seeds, or bearded seeds tend to rise to the top of the spreader, therefore, mix seed accordingly as planting commences.
f. For upland areas, rake or drag the seed into the soil, but not more than 1/4-inch deep. Roll the area with a roller to firm the seed into the soil. For wetland areas, seed must be left on the soil surface but should be rolled to increase soil contact if soil conditions allow. Rolling is not necessary on dormant seedings.

2. Drill Seeder or Drop Seeder/Spreader:
   a. For dormant drill seeding, the plant material from the previous growing season should be cut to a maximum 6 inch height and cut material removed to allow the seed to make good soil contact. Seed can be sown directly into the cut plant stubble.
   b. For dormant drop seeding, the previous year's plant material should be cut and the ground cultivated before installing seed mix.
   c. For spring drill seeding, sow seed directly onto bare ground or ground where the previous year's plant stubble has been cut to 2 inch height and cut material removed; for spring drop seeding, cultivate the ground before installing seed mix.
   d. If using a drill seeder and there are separate native grass and forb seed mixes, remove delivery tubes when installing the forb mix and allow the seeds to drop directly from the box.
   e. Check the equipment frequently to ensure the seed is dispersing evenly and is not clogging.
   f. If the equipment is not equipped with a roller, pass over the seeded area with a roller to firm the seed into the soil. Rolling is not necessary with dormant seeding.
   g. Do not mix the native seed with any carrier material.
   h. Evenly distribute the seed across the entire site to be seeded.
3. Keep the topsoil moist (to a depth of 3 inches) for 3-6 weeks following seeding; afterward, apply one inch of water during the growing season if rain has not occurred for more than one week. Do not apply water with such a force as to disturb seed, seedlings, and/or topsoil, or that would run off soil surface.

3.2 REPAIR/RESTORATION

A. All areas over which hauling operations have been conducted shall be kept clean on a daily basis. Promptly remove all materials spilled on pavement.

B. Upon completion of seed installation, remove from the site and legally dispose of all trash and debris including any material removed during grade preparation.

C. Restore any existing areas damaged by operations under the contract. Restoration shall include finish grading and seeding as required to match existing grade and/or wetlands, and maintenance of restored areas.

D. Protect seeded areas from stormwater flows discharging from paved surfaces until vegetation establishment. Additional water diversion and erosion control measures including but not limited to silt fence, sediment control tubes, wattles, and check dams may be utilized at Contractor's discretion and expense. Remove non-biodegradable erosion control measures after vegetation establishment.

E. Any damage by the Contractor to established or newly seeded areas not within the project scope of work shall be repaired and reseeded at no cost to the Owner.

END OF SECTION

SECTION 329300 – EXTERIOR PLANTINGS

PART 1 - GENERAL

1.1 SUMMARY

A. Section Includes:
1. Tree and shrub plantings.
2. Herbaceous perennials, ornamental grasses, groundcover and vine plantings.
3. Plant procurement.
4. Plant mulch.
5. Aggregate maintenance edge.
6. Maintenance.
7. Warranty replacements.

B. Related Requirements:
1. Section 077273 "Vegetated Roof Systems."
2. Section 328000 "Irrigation System."
3. Section 329100 "Topsoil."
4. Section 329220 "Native Seeding."

1.2 REFERENCES AND REGULATORY REQUIREMENTS

A. Hortus Third, The Staff of the L.H. Bailey Hortorium. 1976. MacMillan Publishing Co., New York.

B. ASTM International, as referenced herein as ASTM.

C. American Standard for Nursery Stock, as referenced herein as ANSI Z60.1 (current edition). Where there is a conflict between the information in this Section and ANSI Z60.1, this Section shall govern.

D. United State Department of Agriculture (USDA), Plant disease and insect control Phytosanitary and Export Certifications.

E. United States Composting Council, Seal of Testing Assurance (STA), Procedures for sampling and testing as outlined in the Test Methods for the Examination of Composting and Compost (TMECC) protocols.

1.3 DEFINITIONS

A. Balled and Burlapped Stock: Plants dug with firm, natural balls of earth in which they were grown, with a ball size not less than diameter and depth recommended by ANSI Z60.1 for type and size of plant required; wrapped with burlap, tied, rigidly supported, and drum laced with twine with the root flare visible at the surface of the ball as recommended by ANSI Z60.1.

B. Bare-Root Stock: Plants with a well-branched, fibrous-root system developed by transplanting or root pruning, with soil or growing medium removed, and with not less than the minimum root spread according to ANSI Z60.1 for type and size of plant required.

C. Container-Grown Stock: Healthy, vigorous, well-rooted plants grown in a container, with a well-established root system reaching sides of container and maintaining a firm ball when removed from container. Container shall be rigid enough to hold ball shape and protect root mass during shipping and be sized according to ANSI Z60.1 for type and size of plant required.

D. Finish Grade: Elevation of finished surface of planting soil.

E. Mycorrhizal Inoculum: Fungi either introduced or naturally occurring in the soil that increase plant roots growth and ability to absorb nutrients and water.

F. Pesticide: A substance or mixture intended for preventing, destroying, repelling, or mitigating a pest. Pesticides include insecticides, miticides, herbicides, fungicides, rodenticides, and molluscicides. They also include substances or mixtures intended for use as a plant regulator, defoliant, or desiccant. Some sources classify herbicides separately from pesticides.

G. Pests: Living organisms that occur where they are not desired or that cause damage to plants, animals, or people. Pests include insects, mites, grubs, mollusks (snails and slugs), rodents (gophers, moles, and mice), unwanted plants (weeds), fungi, bacteria, and viruses.

H. Planting Soil: Existing, on-site soil; imported soil; or manufactured soil that has been modified with soil amendments and perhaps fertilizers to produce a soil mixture best for plant growth.

I. Root Flare: Also called "trunk flare." The area at the base of the plant's stem or trunk where the stem or trunk broadens to form roots; the area of transition between the root system and the stem or trunk.

J. Root Production Method (RPM): A trademark technology referred to as root production method for a variety of tree and shrub species resulting in a dense fibrous root system for smaller sized plants.

K. Single Central Leader: A single central dominant leader branch, free of secondary co-dominant stems that would compete with the central leader, either naturally occurring or professionally trained in the nursery with no stem deformities.

L. Specimen Plant: Exceptionally heavy, symmetrical, and tightly knit, growth, superior in form, with properly spaced branching.

M. Stem Girdling Roots: Roots that encircle the stems (trunks) of trees at or below the soil surface.

N. Subgrade: The surface or elevation of subsoil remaining after excavation is complete, or the top surface of a fill or backfill before planting soil is placed.

O. Sheared Evergreen: Any evergreen tree or shrub that has been heavily trimmed or pruned to remove the natural shape of the plant. An evergreen tree grown at a "Christmas tree farm" is typically sheared.

P. Young Plants: Lining out stock, seedlings generally sold within the wholesale trade for continued cultivation.

1.4 PREINSTALLATION MEETINGS

A. Preinstallation Conference: Conduct conference at Project site.

1.5 ACTION SUBMITTALS

A. Product Data:
   1. Plant procurement verification:
      a. Within 4 weeks following the execution of the Agreement between the General Contractor and the Landscape Subcontractor, submit vendor purchase order, invoice or bill of lading for each plant species showing sizes, quantities and root treatment.
      b. Provide digital photos of all plant materials. Photos must depict the entire size and condition of the plant and include a scale rod or other measuring device to show scale. For species where more than 20 plants are required, include a minimum of three photos that show the average plant, the best quality plant, and the worst quality plant to be provided. Label each photograph with the plant name, plant size, and name of the growing nursery.
      c. The Contractor may request the Landscape Architect to provide nursery visits for the purpose of reviewing and tagging plant materials. The Contractor shall compensate the Landscape Architect for said services.
      d. Substitutions shall not be permitted without written approval from the Landscape Architect.
   2. Metal edging and accessories.
   3. Soil amendments: Provide information on composition and source of all soil amendments. Include test results for compost and peat.
   4. Mycorrhizal inoculum.
   5. Fertilizer.
   6. Antidesiccants: Include product label and manufacturer's application instructions.
   7. Staking and guying materials and ties.

B. Source Quality Control:
   1. Samples:
      a. Organic Mulch: 1 quart by volume in sealed plastic bag labeled with composition of materials and source of mulch. Provide an accurate representation of color, texture, size, and organic makeup.
      b. Mineral Mulch: 1 quart by volume in sealed plastic bag labeled with composition of materials and source / product name. Provide an accurate representation of color, texture, and size. Note, multiple samples of available products may be required for color selection by the Owner.
      c. Maintenance edge aggregate: 1 quart by volume in sealed plastic bag labeled with composition of materials and source / product name. Provide an accurate representation of color, texture and size. Note, multiple samples of available products may be required for color selection by Owner.
   2. Test Report:
      a. Topsoil: Test reports including fertilization recommendations for lawns and plant materials. Refer to Section 329100 "Topsoil."
   3. Certifications/Licenses:

a. Phytosanitary Certification: Plant material Inspection Certificates required by Federal, State or other governing authority at the time of plant material verification identified above.
b. License certificate(s) for pesticide applicator.

C. Field Quality Control:
1. Project Work Schedule: Within 4 weeks following the issuance of the Notice to Proceed, submit a project work schedule to the Landscape Architect indicating dates for delivery, installation, and Substantial Completion for all landscape work. The Schedule shall be comprehensive and address procurement, delivery, and installation of irrigation, planting and seeding/sodding areas of the site. For large site, the schedule shall reflect a phased installation and shall include support graphics required to identify this phased approach.
2. Maintenance Schedule: Prior to the issuance of Substantial Completion, submit a detailed typewritten approach and schedule for the warranty maintenance of all landscape activities outlined under Part 3.13 of this section. Coordinate landscape maintenance with other applicable Sections (Native Seeding , Irrigation) and combine all maintenance activities into one plan of action. The schedule shall be comprehensive and shall be the basis for monthly payment during the maintenance period.
3. Maintenance Report Forms: Using the approved Maintenance Schedule as the framework for all maintenance activities (plant maintenance, and irrigation operations). The Contractor shall provide detailed maintenance report forms for each site visit. The reports shall be completed by the on-site maintenance superintendent performing the work prior to leaving the site and shall be submitted monthly as back-up to each invoice. Each report shall include the following:
a. Date of activity.
b. Length of time on site (start time and finish time).
c. Name and signature of the maintenance superintendent.
d. Number of personnel performing the work.
e. Site climatic conditions (rain, wind, temperature, etc.)
f. Detailed description of maintenance activities performed by area.

1.6 INFORMATIONAL SUBMITTALS

A. Qualification Data:
1. Include list of at least three similar projects completed in the last 5 years by Installer demonstrating Installer's capabilities and experience. Include project names, addresses, and year completed, and include names and addresses of owners' contact persons.
2. Provide resumes of field technician (foreman) responsible for managing the purchase and installation of all materials. Separate resumes shall be provided for the planting, seeding, irrigation and maintenance technicians.
3. ISA certification for arborist.

1.7 QUALITY ASSURANCE

A. Qualifications:
1. The Contractor shall be a company specializing in exterior landscape and irrigation installations and maintenance, having a minimum 5 years' experience in projects of the scope and scale being specified.

2. Installer's field technician: The installer shall provide a full-time supervisor on site when work is in progress.
3. Maintenance field technician: The maintenance activities for all landscape areas shall be performed by skilled employees of the landscape installer. Subcontractors specializing in landscape and turf maintenance will not be permitted unless approved in writing by the Landscape Architect.
4. Pesticide applicator: State licensed, commercial.
5. Tree and shrub pruning: ISA certified Arborist.

B. Substitutions:
1. It is the Contractor's responsibility to locate and secure all plant materials and to verify their availability well in advance of installation through the timely Action Submittal process identified above. Failure to comply with this requirement shall not be a reason for making substitutions. Furthermore, it may be necessary to purchase specified plants from multiple nurseries and from out-of-state sources providing said sources are within the same hardiness zone as the site.
2. Substitutions of plant materials will not be permitted unless authorized in writing by the Landscape Architect.
3. Plants of larger size may be used if approved and if root balls meet ANSI Z60.1 for the increased size. Adjustments will be made at no additional cost to the Owner. Approval of smaller size plant materials shall require a corresponding credit to the contract price subject to Owner pre-approval.

C. Plant Material Observation: Landscape Architect may observe plant material either at place of growth or at site before, during or after planting for compliance with requirements for genus, species, variety, cultivar, size, and quality. Landscape Architect retains right to observe trees and shrubs further for size and condition of balls and root systems, pests, disease symptoms, injuries, and latent defects and to reject unsatisfactory or defective material at any time during progress of work. Remove rejected trees or shrubs immediately from Project site.

1.8 DELIVERY, STORAGE, AND HANDLING

A. General:
1. Packaged Materials: Deliver packaged materials in original unopened containers showing weight, analysis and name of manufacturer. During shipment and storage on site, protect materials from breakage, moisture, heat or other damage.
2. Store materials only in locations approved by the Owner. No storing or mixing of pesticides or herbicides is allowed on site.

B. Bulk Materials:
1. Do not dump or store bulk materials near structures, utilities, walkways and pavements, or on existing turf areas or plants.
2. Provide erosion-control measures to prevent erosion or displacement of bulk materials; discharge of soil-bearing water runoff; and airborne dust reaching adjacent properties, water conveyance systems, or walkways.
3. Accompany each delivery of bulk materials with appropriate certificates.

C. Plant Materials:
1. Do not bend, stack or bind plants in a manner that damages bark, breaks branches or root systems, deforms root balls or destroys natural shape.

2. Transport plants in closed vehicles or with the entire load properly covered to protect from drying winds, heat, freezing or other exposure that may be harmful. Schedule shipping to minimize on-site storage of plants. Closed vehicles shall be adequately ventilated/refrigerated.
3. Labels: Prior to shipping, each plant or bundle of like variety and size shall be labeled with legible weatherproof tags indicating the correct name and size of plant.
4. Stock shall not be shipped until the planting preparations have been completed. If planting is delayed more than 24 hours after delivery, set plants and trees in filtered sun or shade, protect from weather and mechanical damage, and keep roots moist.
    a. Heel-in bare-root stock. Pack root system in wet straw, hay, or other suitable material to keep root system moist until planting. Soak roots in water for two hours immediately prior to planting. Plants with dry roots will be rejected. Any bare-root plants requiring sweating to break dormancy must have this procedure carried out before plants arrive onsite.
    b. Set balled stock on ground and cover ball with soil, or bark mulch.
    c. Do not remove container-grown stock from containers before time of planting.
    d. Water root systems of plants stored on-site deeply and thoroughly with a fine-mist spray. Water as often as necessary to maintain root systems in a moist, but not overly wet condition.
5. Schedule shipping aquatic tubers and plugs to result in on-site storage time of less than one day prior to installation. If delays beyond the Contractor's control occur after delivery, store plants to ensure viability. All aquatic plants that are in a state of decay at the time of planting shall be rejected regardless of condition at the time of delivery to the site.
6. Aquatic plant container bags shall be opened upon arrival to allow air flow, but stored in a cool shaded location with ample moisture to maintain the plants in their natural wet habitat condition.
7. Store bulbs, corms, and tubers in a dry place at 60 – 65 degrees F until planting.
8. Handle plants at all times in accordance with the best horticultural practices. Lift B&B materials from the bottom of the ball only; do not roll the plants. Plants handled otherwise will be subject to rejection. Balled and burlapped plants which have cracked or broken balls are not acceptable and shall not be planted. Plants with mechanical damage, deformation or breakage will not be accepted and are to be replaced at the Contractor's expense.

1.9 SCHEDULING

A. Work Schedule:
1. Upon authorization to proceed with the work, submit a project work schedule indicating the dates of each of the following items:
    a. Submittal schedule.
    b. Tagging of plants in nurseries.
    c. Delivery of other materials to the site.
    d. Staking of plant locations on the site.
    e. Delivery of plant material to the site.
    f. Planting.
    g. Substantial Completion of the work.

h. Maintenance period.

2. Update schedule monthly to reflect progress of the work.

B. Planting Season:

1. Materials shall be installed during planting seasons normally recognized in the job locality. Soils shall be in workable condition and not frozen.
2. If special circumstances warrant installation outside the normal planting season, submit a written request to the Landscape Architect describing conditions and stating the proposed variance. Planting outside the planting season could extend warranty obligations and will be dependent upon the extent of the variance.
3. Weather limitations: Proceed with planting only when existing and forecasted weather conditions permit planting to be performed when beneficial and optimum results may be obtained. Apply products during favorable weather conditions according to manufacturer's written instructions and warranty requirements.
4. Coordination with lawn installation: Plant trees, shrubs, and other plants after finish grades are established but before seeding/sodding unless otherwise indicated. When planting trees, shrubs, and other plants after seeding/sodding, protect completed areas, and promptly repair damage caused by planting operations.

PART 2 - PRODUCTS

2.1 PLANT MATERIALS

A. General: Furnish nursery-grown plants true to genus, species, variety, cultivar, stem form, shearing, and other features indicated in the Plant List shown on Drawings and with the minimum quality conforming to ANSI Z60.1. Branching on all plants shall be characteristic of the species, well-shaped, full, sound, healthy, vigorous stock of uniform growth and densely foliated when in leaf. All plants shall be free of disease, pests, eggs, larvae, and defects such as knots, sun scald, injuries, abrasions, and disfigurement.

1. Collected Stock: Do not use plants harvested from the wild, from native stands, from an established landscape planting, or not grown in a nursery unless otherwise indicated.
2. Plants shall originate from the same USDA Hardiness Zone as project site, or lower (colder).
3. Provide plants of sizes, grades, and ball or container sizes complying with ANSI Z60.1 for types and form of plants required. Where plant height or spread is indicated with a tolerance, the smaller dimension is the minimum acceptable; the larger dimension represents the maximum permissible. The average dimension of all plants must, at least, equal the average of the tolerance figures shown on the drawings. Spread shall meet the minimum dimension specified in all directions and must be considered as pivoting on center of plant.
4. All plants shall have a waterproof legible label securely attached to each plant bearing designation of plant's common and scientific name, including genus, species, and cultivar or variety, when applicable.
5. Do not prune plants prior to delivery.
6. Stressed or damaged plants or those not conforming to the specifications shall be subject to rejection by the Landscape Architect at any time during the term of the contract.

B. Root treatments on all plants shall conform to the following requirements:
   1. Balled and burlapped ("B&B") plants shall have healthy root systems developed by transplanting or root pruning with a firm, natural ball of earth securely wrapped with burlap, bound with cord and wire basket. Root flare shall be visible before planting. Plants with damaged or broken root balls or multiple layers of burlap will not be accepted.
   2. Containers shall be finished landscape grade material having their roots well established in the soil mass. Plants over-established in the container, as evidenced by pot-bound root ends, will not be accepted.
   3. Perennials, staked vines, groundcoverand ornamental grasses shall have well-established root systems reaching to sides of the container to maintain a firm ball, but not with excessive root growth encircling the container. Provide only plants that are acclimated to outdoor conditions before delivery.

C. Trees: Evergreen and deciduous trees shall have straight single leaders. Trees with damaged, crooked, or multiple leaders; tight vertical branches where bark is squeezed between two branches or between branch and trunk ("included bark"); crossing trunks; cut-off limbs more than 3/4 inch in diameter; or with stem girdling roots will not be accepted. Evergreens shall be unsheared.
   1. Trees indicated as specimen shall be exceptionally heavy, symmetrical, and superior in form, branching, and symmetry.
   2. Caliper is the trunk diameter taken at a specified distance above root collar as described in ANSI Z60.1.
   3. Branching height is the distance above ground where balanced branching occurs.

2.2 MULCH

A. Organic Mulch: Well-composted, finely shredded processed hardwood bark, free from foreign material and fragments in excess of 2 inches in any dimension.
   1. Dyed mulch or mulch that is predominantly wood chips will not be accepted.

B. Mineral Mulch: Hard, durable stone, washed free of loam, sand, clay, and other foreign substances, of following type, size range, and color:
   1. Type: decomposed granite.
   2. Size Range: see drawings.
   3. Color: see drawings.

C. Filter Fabric: Synthetic, non-woven, needle-punched geotextile fabric weighing 2 to 4 oz per square yard with a minimum grab tensile strength of 35 pounds and permeability of 0.03 cm/second.

2.3 STAKING AND GUYING

A. Staking (for deciduous trees less than or equal to 3.5-inch caliper, ornamental/understory trees, and evergreens less than or equal to 12-foot height):
   1. Tree support stakes shall be a 3 inch diameter . Posts shall be minimum 8 feet long.
   2. Wire stays for tree stakes shall be No. 12 to 14 gauge galvanized wire. Polypropylene strapping will not be permitted.
   3. Chafing guards shall be fiber-reinforced hose of not less than 1/2 inch inside diameter, color black. Multi-colored hose will not be permitted.

B. Guying (for deciduous trees greater than 3.5" caliper and evergreen trees greater than 12-foot height):
   1. Tree support stakes for guying shall be 2 x 4 hardwood posts 30 inches long or metal fence posts 48" long. Guying stakes shall be driven below grade and not visible.
   2. Cable for guying trees shall be 3/16 inch diameter, five strand, galvanized steel wire. Polypropylene strapping will not be permitted.
   3. Cable clamps and turnbuckles shall be galvanized, forged steel. Turnbuckles shall be 3/8-inch eye with 6-inch minimum opening.
   4. Chafing guards shall be fiber-reinforced hose of not less than 1/2 inch inside diameter, color black. Multi-colored hose will not be permitted.

2.4 PLANTING MIXTURES

A. General: All planting mixtures shall be well pulverized, blended materials, free of rocks, debris of any type, tree roots, and other extraneous materials that will impede plant growth. When blending off-site amendments (peat, compost, etc.) with topsoil, the topsoil shall be pulverized and screened to remove all non-soil materials greater than ½ inch diameter. If on-site topsoil is not available, substitute pre-approved off-site topsoil. On-site sub-soils will not be permitted for use in plant mixtures.

B. Standard planting backfill for individual tree and shrub pits shall be: 1 part existing, well pulverized soil excavated from planting pit or from site topsoil stockpile thoroughly blended with 1 part approved off-site topsoil.

C. Plant bed mixture for beds comprising a mix of shrubs, perennials, annuals, ornamental grasses and groundcover shall be 2 parts approved off-site topsoil thoroughly blended with 1 part compost.

D. Bioswale Soil Mix: see drawings.

E. SOIL AMENDMENTS

F. Compost shall be a heavily decomposed mature/stabilized, humus-like material derived from the aerobic decomposition of leaf compost or standard commercial grade compost of sheep or cow manure. Raw manure is not suitable for use. The compost shall have a dark brown or black color, be capable of supporting plant growth without ongoing addition of fertilizers or other soil amendments and shall not have an objectionable odor. The compost shall be free of plastic, glass, metal, rocks, gravel, and other physical contaminants, as well as viable weed seeds and other plant parts capable of reproducing (except airborne weed species).
   1. pH: 6 to 8.
   2. Moisture content: 35 to 50 percent by weight. No visible free water or dust is produced when handling it.
   3. Sieve analysis: 100 percent passing 3/4 inch screen.
   4. Soluble salt content: Electrical conductivity below 10 dS m-1.
   5. Organic matter content: Minimum 40 to 60 percent.

G. Sand shall be clean, coarse, ungraded, meeting the requirements of ASTM C33 for fine aggregates.

H. pH Adjusters:

1. Lime shall be finely ground agricultural grade dolomitic limestone containing not less than 85 percent calcium and magnesium carbonates conforming to ASTM C602, Class T or O.
2. Elemental sulfur shall be granular, biodegradable, horticultural grade material containing at least 90 percent sulfur, with a minimum of 99 percent passing through No. 6 sieve and a maximum of 10 percent passing through No. 40 sieve.

I. Mycorrhizal Inoculum
1. Mycorrhizal fungi in the inoculant shall be available as propagules, i.e., spores, root fragments and hyphae. The inoculant shall contain highly selected strains of low host specificity endo- and ectomycorrhizal fungi combined with other beneficial fungi (Trichoderma), humic acids, biostimulants, beneficial bacteria, soluble sea kelp, and yucca plant extracts, as manufactured by Horticultural Alliance or approved equal.

2.5 FERTILIZER

A. Fertilizers are required at the time of installation and during the warranty/maintenance period. The fertilization program shall be based on soil testing and formulations and rates of application shall be based on test reports provided by the independent testing laboratory.

B. The independent testing laboratory shall also prepare a custom formulation and rate for each category of plants to be installed and maintained; i.e. trees, shrubs, perennials/ornamental grasses, annuals and bulbs.

C. Fertilizers shall include organic and inorganic, slow release and water-soluble nitrogen and the percentages shall be based on soil types and the time of year being applied. Fertilizers shall not be applied during the hot summer months unless specific to blooming plants or from mid-summer through the end of the growing season when new plant growth will not harden off prior to the first killing frost.

D. The fertilizer to be used to amend the soil before planting shall be granular fertilizer that conforms to applicable state and federal regulations, and contains no less than 60 percent slow-release nitrogen.

E. Fertilizer to be used during the warranty and maintenance period shall be a complete fertilizer of neutral character, consisting of fast- and slow-release nitrogen, not less than 30 percent of the nitrogen from a slow release source. Fifty percent of the nitrogen shall be derived from natural organic sources. The formulations shall be as provided by soil test.

2.6 PESTICIDES AND HERBICIDES

A. Pesticides and herbicides shall be registered and approved by the EPA, acceptable to authorities having jurisdiction, and of type recommended by manufacturer for each specific problem and as required for project conditions and application. Do not use restricted-use pesticides and herbicides unless authorized in writing by authorities having jurisdiction.
1. Pre-Emergent Herbicide (Selective and Non-Selective): Effective for controlling the germination or growth of weeds within planted areas at the soil level directly below the mulch layer.

2. Post-Emergent Herbicide (Selective and Non-Selective): Effective for controlling weed growth that has already germinated.

2.7 MAINTENANCE EDGE AGGREGATE

A. Aggregate for maintenance edges shall be: Hard, durable stone, washed free of loam, sand, clay, and other foreign substances, of following type, size range, and color. Refer to drawings for type, color, and size.

B. Filter Fabric: Synthetic, non-woven, needle-punched geotextile fabric weighing 2 to 4 oz per square yard with a minimum grab tensile strength of 35 pounds and permeability of 0.03 cm/second.

PART 3 - EXECUTION

3.1 EXAMINATION

A. General:
1. Prior to beginning work, examine and verify the acceptability of the project site and notify the Landscape Architect of unsatisfactory conditions or obstructions that do not appear on the Drawings. Do not proceed with the work until unsatisfactory conditions have been corrected or resolved.
2. Verify that no foreign or deleterious material has been deposited in soil within a planting area.
3. Where planting occurs in close proximity to other site improvements, provide adequate protection to all features prior to commencing work. Promptly repair any items damaged during planting operations to their original condition.
4. Do not mix or place soils and soil amendments in frozen, wet, or muddy conditions.
5. Suspend soil spreading, grading, and tilling operations during periods of excessive soil moisture until the moisture content reaches acceptable levels to attain the required results.
6. Uniformly moisten excessively dry soil that is not workable and which is too dusty.
7. If plants die or are rejected due to non-conformity to contract requirements, they must be removed from the site immediately and replaced before Substantial Completion.

B. Utilities: Have all underground utilities located by servicing agencies. In the vicinity of utilities, hand-excavate to minimize possibility of damage.

C. Pesticides and Herbicides:
1. General: All plants delivered to the site shall be free of disease, pests, eggs, and larvae. Promptly remove all plants that do not conform to this requirement.
   a. Insecticides should only be used to control pests when present in quantities that will be detrimental to plant vigor.
   b. Applying foliar herbicides to control weeds in plant beds after installation will not be permitted unless approved in advance by the Landscape Architect. Approval will only be granted if plants to be controlled cannot be effectively removed by hand pulling. Foliar herbiciding will only be permitted as part of the weed control program developed by the Contractor in advance of planting.

c. All chemicals shall be stored and mixed off-site. No chemicals of any type shall remain on site at the end of each work day.
d. Do not apply over water or dispose of used containers on-site.
e. Post all pesticide and herbicide applications.

D. Coordination with Other Work:
1. The Contractor shall coordinate work with other contractors or trades to determine the appropriate sequence of landscape installation with respect to other work on the site.
2. Completed work installed out of construction sequence which is subsequently disturbed by the completion of work by other trades shall be repaired by the landscape installer at no cost to the Owner.
3. Maintain grade stakes and layout controls set by others until removal is mutually agreed upon by all parties concerned.

3.2 PREPARATION

A. Protect structures, utilities, sidewalks, pavements, and other facilities and turf areas and existing plants from damage caused by planting operations.

B. Install erosion control measures, if necessary, to prevent erosion or displacement of soils and discharge of soil-bearing water run-off or airborne dust to adjacent properties, natural resources and all pavement surfaces.

C. Vegetation Removal: Strip and dispose of organic debris and root mat.

3.3 LAYOUT

A. Accurately lay out each plant location and planting bed edges according to the drawings, using clearly visible painted, labeled stakes or plastic flags. Spray paint continuous lines on bare soil delineating plant bed boundaries. When scaling locations on the drawings, use at least 2 known reference points as layout controls to determine plant locations. Do not proceed with planting operations until locations have been reviewed and approved in writing by the Landscape Architect.

B. Prior to installation, all plant locations and bed edges must be approved by the Landscape Architect, who may field adjust locations at no additional cost to Owner. Plants installed without layout approval are subject to relocation at Contractor's expense.

3.4 PLANT INSTALLATION

A. General: Complete all plantings, metal edging and mulching prior to fine grading adjacent seed beds. Keep excavations covered or otherwise protected after working hours and when unattended by Installer's personnel.

B. Planting Pit Excavation:
1. For individual plant pits in seeded areas, spread seed bed topsoil to the uniform depth and rough grade prior to layout and planting pit excavation.
2. Remove rocks and other unclassified underground obstructions to at least 6 inches below the finished planting depth of the root ball. Trim perimeter of planting pit leaving center area of bottom raised slightly to support root ball and assist in drainage away from center. Ensure that root ball will sit on undisturbed base soil to prevent settling. If plant pits are initially dug too deep, add soil to raise it to the correct level and thoroughly tamp the added soil to prevent settling.

3. If underground utilities or other surface or subsurface obstructions are encountered that cannot be removed, do not proceed with planting operations until alternate planting locations have been selected and approved by the Landscape Architect.
4. Size and configure planting pits in accordance with the planting details. If rotating augers or other mechanical diggers are used, scarify the side walls and bottom of the pit.
5. Where poor soil percolation is probable, test drainage by filling planting pits with 12 inches of water. Record the drainage time for each pit and if, in the opinion of the Landscape Architect, the water does not adequately drain off within 24 hours, install drains or raise plant pits as directed.

C. Planting Bed Excavation:
1. In locations where plant beds are shown on the drawings and earth moving is not required other than achieving the specified plant bed subgrades, excavate plant beds to the depth shown on the planting details. Remove all existing vegetation. Following vegetation removal, top dress plant bed with plant bed mixture and rototill into upper twelves inches of soil. Lightly compact.
2. Grade subgrade smooth and uniform. Slope to perimeter of plant bed when underdrains are required to collect accumulated water within the bed.
3. Transition from plant bed subgrade to adjacent seed bed subgrade outside the limits of the plant bed to ensure full depth plant bed mixture is provided.
4. Where plant beds terminate next to pavement surfaces, subgrade transitions shall be 12 inches wide within the plant bed to protect pavement base material from being undermined.
5. Obtain approval from the Landscape Architect for all subgrades prior to placing plant mixtures. Notify the Landscape Architect 7 days in advance of placing plant mixture.

D. Mixing and Placing Planting Mixtures:
1. Install planting bed and planting pit mixtures to the specified proportions and depths. On-site mixing of salvaged topsoil with off-site topsoil or amendments shall result in a homogenous blend of all ingredients. Screen all mixture to remove foreign debris and rocks greater than ½ inch diameter prior to placement.
2. Place planting bed mixture in 6 inch lifts and lightly compact to prevent settlement after planting. Settlement that occurs after planting will require plant removal and the placement of additional plant mixture at the Contractor's expense. When placing mixture in raised planters, set finish grade elevations 2 inches low for mulch placement, if required on Drawings.
3. Grade planting areas to a smooth, uniform surface plane. Roll and rake, remove ridges, and fill depressions to meet grade.
4. Before planting, obtain Landscape Architect's approval of finish grading; restore planting areas if eroded or otherwise disturbed after finish grading.

E. Fertilizing:
1. Prior to or during planting, amend all planting pit and bed mixes by incorporating fertilizer at rates required by soil test reports as specified under Section 329100 "Soil Preparation (Topsoil)". Do not broadcast fertilize over the surface of the soil or onto any plant root ball.
2. For individual plant pits, incorporate fertilizer into back fill during planting operations. For plant beds, pre-mix fertilizer prior to installation.

F. Planting and Backfill:
   1. Do not plant when the ground is frozen or saturated.
   2. Container-grown plants: Remove containers and make at least four vertical cuts one-half to one inch deep around the root ball and thoroughly loosen the roots on the outside of the ball. Plant as specified above for balled and burlapped plantswith the additional requirement that container-grown stock shall be planted so that top of container soil is level with surrounding grade, unless the root flare is not at the surface of the container soil. If the root flare is buried, excavate to expose the flare and place as required above in relation to finish grade. Size of root ball must meet ANSI Z60.1 after removal of material. Do not plant higher to account for mulch, as mulch should not cover plant crown.

3.5 SPECIAL PLANTING CONSIDERATIONS:

A. Mycorrhizal Inoculum:
   1. Rototill 2 granular pounds per 1000 square feet into the top 8 inches of soil for plant beds or as recommended by supplier. Incorporate 1 pound per cubic yard of plant pit backfill as backfill is being placed.

B. Sloped Plantings:
   1. When planting on slopes, set the plant so the root flare on the uphill side is flush with the surrounding soil on the slope; the edge of the root ball on the downhill side will be above the surrounding soil. Apply enough soil to cover the downhill side of the root ball. Complete planting as specified under Part 3.4 F above.

3.6 MULCHING

A. Uniformly install mulch on all trees and shrub beds to depth shown on Plans within 48 hours of planting.

B. Keep mulch out of the crowns of shrubs and perennials, at least 3 inches from all tree trunks, and off sidewalks and roadways.

3.7 PRUNING

A. After planting, prune trees and shrubs to remove all dead, dying, broken, or crossed limbs flush with the ground or main stem leaving no stubs. Do not prune to shape or to compensate for transplanting shock. Retain natural form of the plant type. Prune using standard professional horticultural and arboricultural practices. Remove trimmings from the site.

B. Employ workers experienced in this type of work.

3.8 STAKING AND GUYING

A. Install guying and staking as shown on the details immediately after planting.

B. Remove and dispose of stakes and guys at the end of the warranty period.

3.9 EDGING

A. Metal Edge:
   1. Install edging as detailed and at all locations shown on Plans, keeping the alignment smooth and continuous without visible deviation from the line or arc being set.

B. Trench or Shovel-cut Bed Edge:

1. Install trench edge between all planting beds and lawn in the manner shown on the plans.

3.10 MAINTENANCE EDGE

A. Excavate areas receiving maintenance edge to the cross section shown on the details.

B. Level and compact subgrade and install metal edging and filter fabric as detailed, overlapping ends by 6 inches.

C. Install aggregate, leveling material with the top of edging.

3.11 CLEANUP AND PROTECTION

A. Remove excess and waste material daily. When planting has been completed, clear the site of all debris, stockpiles and materials.

B. Repair any damage to existing landscape, paving or other such features as a result of work related to this contract to its original condition.

C. Protect landscape work and materials from damage due to landscape operations, and operations by other Contractors and trades. Maintain protection during installation and maintenance periods. Treat, repair or replace damaged landscape work as directed.

D. Trunk protection shall be placed around all deciduous shade tree trunks at a minimum height of 5' immediately after planting.

3.12 MAINTENANCE

A. Provide all maintenance under the supervision of a skilled employee of the landscape installer. The skilled maintenance supervisor shall be: capable of operating the automatic irrigation system controller, conducting plant diagnostics to identify the presence of disease and insect problems and directing a maintenance crew in the performance of horticultural maintenance practices identified below. Maintenance requirements identified below shall be the basis for information to be included in the Maintenance Schedule and Irrigation Plan identified under Part 1.5 of this section and thoroughly documented under the required Maintenance Report Forms to verify the work has been properly performed.
   1. Failure to perform and submit factual Maintenance Report Forms could result in non-payment for said services and require the extension of the warranty and maintenance period an additional year at the Contractor's expense.

B. Provide all equipment, materials, labor and services to maintain the landscape beginning immediately after each plant is installed and continuing until Final Acceptance and the end of the warranty period. Perform all work under the direct supervision of a technician trained to recognize and treat conditions affecting the establishment and growth of the plants and perform the following:
   1. Inspect the entire landscape at least once per week during the growing season and perform needed maintenance promptly.
   2. Irrigation:
      a. Irrigate all plants to maintain optimum moisture within the root zone. Reoccurring overly dry or wet conditions shall be grounds for rejection of plant material. When using an automatic sprinkler system, the landscape installer responsible for maintenance shall bear full responsibility to set each zone to the correct frequency and duration.

b. If the automatic irrigation system is inoperative or not present, provide an approved temporary irrigation system or hand water from a source approved by the . The system shall have the ability to be operated without moving hoses or sprinklers around the site between seeded/planted areas (i.e. system can be set to water one area for the required maintenance period), and may be automated with a timer. Supply all water and equipment at the Contractor's expense from a source approved by the .

3. All pruning shall be performed by or under the supervision of a certified arborist. Prune ly only dead wood and broken limbs as identified, in accordance with Part 3.7 - Pruning. Do not shear evergreens or any shrubs unless specifically required to be maintained as a sheared hedge. Maintain the natural shape of trees and shrubs. Plants sheared so that they no longer present their natural shape will be replaced at Contractor's expense.
4. Maintain stakes and guys taut and in the specified condition. Repair trees wraps if loose, torn or untied.
5. Maintain all plant beds and tree saucers weed free. Edge shrub and perennial beds and tree rings at least monthly during the growing season, keeping all tree rings to a uniform diameter. Hook mulch monthly and add mulch as needed.
6. Deadhead perennials as necessary during maintenance visits to extend blooming periods.
7. In early spring – prior to the start of the growing season, cut all ornamental grasses and perennials flush with the ground and remove cuttings from the site.
8. Apply treatments as necessary to keep plants and planted areas free of insects, pests, and disease. Use integrated pest management practices whenever possible to minimize the use of pesticides and herbicides. Treatments include utilizing physical and cultural controls.
9. All pesticides shall be applied by a licensed pesticide applicator. Apply pesticides and all other chemical products and biological control agents in accordance with the authorities having jurisdiction and manufacturer's written recommendations. Coordinate applications with Owner's operations and others in proximity to the Work. Notify Owner at least 24 hours before each application is performed. No mixing or disposal of chemicals is allowed onsite.
10. Apply antidesiccant to upright conifers and broadleaf evergreens in December through February, at least once per month. In locations subject to high wind or salt spray, install burlap windscreens around spreading conifers and broadleaf evergreens but do not allow burlap to touch the plants.
11. Collect all litter and debris from plant beds and dispose off-site.
12. Fertilization:
    a. Fertilize plant material as recommended by the soil test report.
    b. Perennials: Fertilize twice, once in the early spring and again 8 weeks later with 1 pound of 5-10-5 (N-P-K) per 100 square feet.
13. Remove dead and unacceptable plants as their condition becomes apparent. Make replacements during normal planting schedule season unless otherwise directed by . Do not wait until end of the warranty period to replace plants unless directed to do so by .
14. At the end of the warranty period, but prior to Final Inspection, remove all staking, guying, trunk wrap, protection fences, watering bags or saucers, and other accessories and top dress tree rings and beds 1 inch deep with the specified mulch product.

END OF SECTION

SECTION 331000 - WATER UTILITIES

PART 1 - GENERAL

1.1 SUMMARY

A. Water distribution and service piping outside of the building shall conform to the requirements of the White Mountain Apache Tribe IDIQ 2023 Modification of the 2019 PAO/SFC Technical Provisions, which have been included in the Project Documents for reference:
   1. Section 04 – Water Transmission and Distribution Mains
   2. Section 05 – Water Service Lines

B. Water distribution and service piping outside of the building shall conform to the requirements of the Maricopa Association of Governments Uniform Standard Specifications for Public Works Construction, 2025 Revision to the 2020 Edition:
   1. Water Line Construction, Section 610.
   2. Related sections of Part 600 – Water, Sewer, Storm Drain and Irrigation
   3. Related sections of Part 700 – Materials

1.2 RELATED SECTIONS

A. Section 312333 – Trenching and Backfill

B. Section 333000 – Sanitary Sewerage Utilities

C. Section 334213 – Stormwater Culverts and Drainage Facilities

D. Construction Drawings

PART 2 - PRODUCTS

2.1 WATER METERS

A. Water meter manufacturer and product shall be submitted for review by Engineer and Tribal Utility Authority (TUA) prior to installation

B. Water meters shall be equipped with smart reading device, such as RFID reader, to allow for efficient collection of usage information. Proposed product shall be submitted for review by Engineer and TUA prior to installation

PART 3 - EXECUTION

3.1 WATER LINE COVER

A. All water mains constructed in locations outside of streets shall have a minimum cover of 42 inches.

END OF SECTION

SECTION 331623 – WELDED STEEL WATER STORAGE TANK AND FOUNDATION

PART 1 - DESCRIPTION

1.1 GENERAL

A. These provisions set forth the minimum requirements for design, fabrication, construction and testing of a carbon welded steel, ground supported, water storage tank. Work under these provisions includes:

1. Design of the tank, under-tank piping, tank appurtenances, the tank foundation and preparation of all submittals by a Professional Engineer who is licensed to practice in the state in which the tank will be constructed. The Engineer will be required to provide references for past work, including at least five comparable reservoirs that the Engineer has designed that are now in service.
2. Site clearing and grading and any necessary access road improvements which are shown on the plans or required by the contractor for access to the site.
3. Furnishing all materials, labor, equipment and supervision for the fabrication and erection of welded carbon steel water storage tanks with appurtenances.
4. Soil investigations of each utility campus site have been conducted during the design phase, and the prepared reports are provided for the Contractor's reference as part of the Bidding Documents. Refer to the respective report for recommendations regarding foundation design, the maximum design soil bearing pressure, relevant seismic design information and the calculated factor-of-safety.
5. Tank plumbing as shown on detail drawings and tank site layout drawing.
6. Tank coating per requirements of Section 09 of these Technical Provisions.

B. Design, specifications, fabrication and erection of the carbon steel water-storage tank shall be in strict accordance with AWWA D100-21, AWWA Standard for Welded Steel Tanks for Water Storage, or the latest edition, published by the American Water Works Association, Denver, Colorado, except as modified by requirements of these specifications and applicable drawings.

1.2 RELATED SECTIONS

A. Technical Provisions - Section 01: Trench Excavation and Backfill for Pipelines and Appurtenant Structures.

B. Technical Provisions - Section 03: Concrete

C. Technical Provisions - Section 05: Structural Steel

D. Technical Provisions - Section 09: Coatings for Welded Steel Water Storage Tanks

E. Technical Provisions - Section 33: Water Utilities

1.3 QUALIFICATIONS

A. The Contractor and subcontractors shall be specialists in the design, fabrication, erection and coating of the type of reservoir proposed. The Contractor is required to provide references for past work (owner's name, address and phone number) including five (5) comparable reservoirs that the Contractor (and subcontractors) have constructed that are now in service. The Contractor and all subcontractors shall have a demonstrable minimum of ten (10) years' experience in the proposed scope of work.

1.4 GUARANTEE & WARRANTY

A. The Contractor shall guarantee the structure against all defective materials and/or workmanship, if furnished by the contractor, for a period of 24 months from the date of substantial completion in accordance with Section 1.3 of AWWA D100-21. See TP-34 Coatings for Welded Steel Storage Tanks, (Sec. 34.05.H) for coatings guarantee and warranty requirements.

PART 2 - PRODUCTS

2.1 DRAWINGS & SUBMITTALS TO BE FURNISHED

Drawings and Submittals shall be in accordance with AWWA D100-21.

A. The prospective bidder must submit one copy each of the following items with the bid:
   1. A drawing showing the dimensions of the tank including the diameter, top capacity level (TCL), shell height including plate thickness, type and thickness of the roof, thickness of the bottom plates, and thickness of the bottom annular ring. Also, the maximum wind or seismic gross moment and shear on the foundation system shall be identified.
   2. The number, identifying names and sizes of all accessories.
   3. Coating system submittal as identified in TP-34.
   4. Factory origin of the tank.
   5. A list of five (5) comparable welded tanks installed by the Contractor and now in service in the United States. The list shall contain the name, address and phone number of the organization which owns the tank.

B. After contract award, and prior to fabrication for approval by the Owner or Owner's Representative, the successful bidder must submit one copy each of the following numbered items prior to fabrication for approval by the Owner or the Owner's Representative:
   1. Tank drawings, showing principal dimensions and details of the tank, including roof supports and all appurtenances.
   2. Foundation drawings in accordance with the provided geotechnical report, showing appropriate dimensions and details of the foundation including reinforcing bar placement (if applicable), structural fill and backfill requirements. The design shall include specifications for any structural fill materials including required gradation and compaction requirements.
      a. If the calculations show the tank to be stable without anchorages at the critical wind and earthquake conditions, an aggregate filled steel ring foundation may be used. If anchorages are required, their design is part of this submittal requirement.
      b. If the tank steel is to come in contact with the on-site soil, either an epoxy coating or plastic barrier shall be installed to protect it from corrosion.
      c. Retainer Ring: If a steel retaining ring is to be installed, it shall be 18 inches high, at least 1/4 inch thick, and shall have a minimum-diameter that is two feet greater than the reservoir base. Individual segments of the ring shall be joined by bolted lap-joints the pattern of which shall be based on supportive design calculations. The steel ring shall be placed into crushed aggregate base material to a minimum depth of 10 inches below outside finished grade. A minimum of six-inches (6") shall be above the outside finished grade. Compacted aggregate inside the ring shall be flush with the top of the ring at

all points around its perimeter.

d. The Contractor shall take care in placing the steel ring so that the top of the ring does not deviate in elevation by more than 0.1 foot and so that the deviation from roundness does not exceed 0.1 foot.

3. Design calculations covering design loads versus allowable for dead load, live load, wind and seismic load for all structural components of tank and foundation. The design calculations, loads and stresses shall conform to the requirements of applicable sections of AWWA D100-21. All equations and all calculations shall be shown. All factors shall be defined and the sources of coefficients identified.
4. Detail drawings of the required accessories.
5. Steel mill reports with certification that the appropriate ASTM and AWWA standards have been met.
6. Details of all welded joints.
7. Certificates for welders and welding operators demonstrating qualifications in accordance with AWWA D100-21.
8. All submittal drawings and design sheets shall have been reviewed and approved by a Registered Professional Engineer, who is licensed to practice in the state in which the tank will be constructed, and shall bear the Engineer's registration stamp and endorsement.
9. Gradation and moisture-density curves for foundation backfill, if used.
10. The manufacturer's name, brochures, models, dimensions and any other pertinent information necessary to describe the following:
    a. Piping materials,
    b. gate valves and boxes,
    c. flapper valves, and
    d. type of forms and methods of forming for the concrete foundation (if applicable).

C. Upon review of the above submittals by the Owner or Owner’s Representative, the Contractor shall make all required changes to the submitted drawings. The Contractor shall submit one set of Ledger-size (11” x 17”) revised construction drawings to the Owner or Owner’s Representative for final approval. The approved drawings shall then govern the work detailed thereon. There shall be no deviation from the approved drawings and specifications, except upon written order from the Owner or Owner’s Representative.

D. Approval of the Contractor's drawings by the Owner or Owner’s Representative will relate only to their general conformity with the contract drawings and specifications and shall not guarantee detail dimensions, quantities or structural suitability. Approval of Contractor supplied drawings and specifications shall in no way relieve the Contractor's responsibility to meet the requirements of the contract documents, unless a deviation from the contract documents is clearly requested and explicit written approval of the deviation is provided by the Owner or Owner’s Representative as a contract change.

2.2 MATERIALS

A. Tank Steel: Carbon or stainless steel if specified.

B. Piping, General: Inlet, outlet, overflow, other pipes and all fittings for fluid use shall be in accordance with applicable detail drawings, and as specified below.
   1. Steel Pipe: Per AWWA D100-21.
   2. Ductile Iron Pipe and Fittings: See Section 33 of the Technical Provisions.

3. PVC Plastic Pipe: See Section 33 of the Technical Provisions.

C. Pipe Fittings: Pipe fittings used for connections to the tank shall be cement mortar-lined ductile iron with specified end fittings such as mechanical joints and flanged-ends that are designed to mate with the type of pipe on which they are used.

D. Concrete: Concrete and concrete work, including reinforcement shall conform to Section 03 of these technical provisions and shall have minimum 3,000 psi, 28-day compressive strength unless higher strength concrete is specified in the contractor's approved design submittals. Copies of design mix and batch tickets shall be provided to the Owner or Owner's Representative.

E. Reinforcing Steel: See Section 04 of the Technical Provisions. Reinforcement size, configuration, spacing and lapping shall be reviewed and approved by the Owner or Owner's Representative prior to allowing the placement of concrete.

F. Gate Valves and Boxes: See Section 33 of the Technical Provisions.

G. Flapper Valve: The overflow/drain line valve shall be a Tideflex Series TF-1 duckbill check (pinch) valve with the sealing lips installed in a vertical position.

H. Structural Roof Design: In order to minimize, or eliminate, lapping steel roof sheets which are not fully coated, roof support structural members and associated welds, the tank roof shall be of the radius-knuckle design which utilizes pre-curved pie-shaped roof plates to structurally tie the roof to the sideshell. This design can also eliminate the need for center column supports up to a certain tank diameter. When center column support is required, the column should bear on plates with fully welded points of contact on both the floor and roof steel.

I. Roof Lap Joints and Roof-Plate Side-Wall Joints: Any Owner or Owner's Representative approved interior roof lap joints and/or roof-plate side-wall joints inside the tank that are not fully welded shall be sealed using NSF 61 certified caulking (Sikaflex®-1a+ or approved equal) after the joints have been coated per Section 09.

J. Store all structural materials, fabricated or plain, above ground on platforms, skids or other supports prior to and during construction. Keep material free from dirt, grease and other foreign matter. Protect material from corrosion.

2.3 TANK SIZE

A. The capacity of the tank shall be a minimum of that shown on the construction plan set. See drawings for tank height, diameter, overflow elevation, piping penetrations and other appurtenance locations.

2.4 ACCESSORIES

Accessories shall be in accordance with Section 7 of AWWA D100-21

A. Safety: The minimum OSHA 29CFR Part 1910 requirements for accessories including hatches shall be followed.

B. Design: All accessories shall be designed by the tank manufacturer's Registered Professional Engineer.

C. Manways: The reservoir shall be equipped with two circular 36-inch diameter shell manways with hinged and bolted watertight covers and other requirements as described in Section 7.4.4 AWWA D-100. The manways shall be located 180-degrees opposed around the tank circumference.

D. Silt Stop: a removable silt stop shall be installed on all pipe penetrations entering the bottom of the tank per Section 5.2 of AWWA D100-21. Silt stops shall not be required for penetrations in the sidewall of the tank. The number and location of pipe connections and size and type of pipe to be accommodated shall be as shown on the detail drawings.

E. Overflow/Drain: The tank shall be equipped with an exterior overflow extended to the ground which shall be of the type and size specified on the detail drawings. The overflow pipe and intake shall be designed for a maximum flow rate equal to 200% of the storage tank design influent flow rate. The overflow pipe may be connected to the tank drain line if shown on the construction drawings. A flapper valve elevated two (2) pipe diameters above a splash pad and rip-rap shall be installed on the end of the over-flow line according to the design drawings. The overflow/drain line flapper valve shall be a Clow Model F 3012 or approved equal/alternative, such as Tideflex Series TF-1 duckbill check (pinch) valve with the sealing lips installed in a vertical position.

F. Stairs: The contractor shall construct the stairs and handrails for access to the top of the water tank to meet the OSHA Standards, 29 CFR 1910.25

G. Roof Access: The contractor shall furnish safe walkway access to roof hatches and vents. Such access shall be reached from the exterior tank ladder (refer to AWWA D-100 for minimum requirements versus roof slope).

H. Roof Access Hatch: The roof access hatch cover shall be designed with a stop to prevent the cover from coming into contact with the reservoir roof when fully open.

1. The access hatch shall be installed near, or adjacent to, the stair landing and shall have a minimum 24-inch opening or as required by OSHA. The opening shall have a curb which rises at least four inches (4”) above the surface of the roof. A hinged and skirted hatch-cover with a length and width that exceeds the access hatch dimensions by two inches (2”) shall vertically overlap the curb by two-inches (2”). The cover shall include a hasp and staple with a standard padlock to fasten it securely. A 1/4 inch NSF61 neoprene gasket seal shall be fixed to the underside of the hatch-cover to ensure that bugs and air-borne debris cannot enter the tank through the hatchway.
2. If specified on the engineering plans/drawings, a 12-inch square float-switch hatch shall be installed. The hatch-cover curb shall extend six inches (6”) above the roof decking. A hinged and skirted hatch-cover with a length and width that exceeds the float-switch hatch dimensions by two inches (2”) shall overlap the curb by two inches. The cover shall include a hasp and staple with a standard padlock to fasten it securely. A 1/4-inch NSF61 neoprene gasket-seal shall be fixed to the underside of the hatch cover to assure that bugs and air-borne debris cannot enter the tank through the hatch. The hinged hatch cover shall be designed with a stop to prevent the cover from coming into contact with the reservoir roof when fully open. The hatch shall have a minimum 12-inch square opening, and a ¼-inch thick NSF/ANSI 61 certified gasket material seal shall be provided.

I. Vent: A screened vent assembly shall be located on the top-center of the roof and shall have sufficient capacity to pass air such that at the maximum design flow rate of water entering or leaving the tank, excessive interior tank-pressure, or vacuum, will not develop. Unless specified otherwise on the design drawings, and depending on regional regulatory requirements, the screen shall be 24 mesh stainless steel and shall be constructed to prohibit insects, animals and debris from entering the tank. The overflow pipe shall not be considered a tank vent. The vent shall be easily dismantled for cleaning. The bottom of the vent screen shall be a minimum of 18” or 2 times the diameter of the vent pipe, whichever is greater, above the tank roof. The vent shall be in conformance with the provisions of Section 7.5, AWWA D100. The entire top and screened area of the vent shall be shrouded by a removable mushroom-style cover which terminates a minimum of four inches (4”) below the screened area. The vent shall be designed to operate when clogged or frosted over (see AST Vent by Advance Tank and Construction Company or approved equal). In the event that the screen frosts over or becomes clogged with foreign material, a fail-safe system will relieve excess pressure or vacuum. The relief mechanism shall not be damaged by the occurrence and shall return automatically to the original operating position after the clogging is cleared. Unless otherwise specified, the vent shall have a locking mechanism to prevent access to the tank. The vent-body shall be aluminum construction.

J. Additional Accessories:

1. Water Level Indicator: The water level indicator shall be half-scale and capable of showing the water level from full to empty by utilizing heavy duty pulleys to allow target travel along the indicator board. The indicator shall be located on the tank side which is most clearly visible from nearby public roads or as directed by the Owner or Owner’s Representative.

   Weatherproof pulley assemblies (Gauging Systems Inc. or approved equal) shall be fastened securely to the tank as shown on the drawings. All pulleys, clevises, clamps and other fastenings on the cables shall be stainless steel and fitted with bolts or screws of like materials. Openings in the roof to accommodate the cable shall not exceed ½-inch in diameter. These openings shall include NSF61 gaskets or grommets for proper sealing and protection.

   The water-level indicator board shall be constructed from aluminum channel, minimum 6- inches wide, 2.8 lb. per ft., and shall be fastened securely to the top half of the reservoir. Markings and numerals shall be painted on the tank indicator in 2-foot graduations from full to empty. The target shall be 1/4-inch steel plate, 12 inches in diameter, finished with red enamel and shall slide freely along the indicator board.

   The float shall be minimum of 15 inches in diameter and be constructed of 3/16-inch stainless steel. The float shall travel on two guide cables of 1/8-inch stainless steel. It shall be of adequate weight and buoyancy to function properly with the specified gage and pulley assembly. The water level indicator shall be half-scale and capable of showing the water level from full to empty and shall utilize heavy duty pulleys to allow target travel along the indicator board.

2. Nameplate: A nameplate shall be filled out with the required information and securely fastened to the tank. Minimum information shall include company name and address, year of erection, design capacity, diameter, height, base elevation, and overflow elevation.

3. Padlocks: The Contractor shall supply and install permanent tumbler padlocks for all tank hatches, the site access gate(s) and on-site control valve vaults. All padlocks shall be keyed alike. Contractor shall coordinate with the Tribal Utility to determine if the new padlocks should match existing keys. A spare padlock with two keys shall be provided.
4. Confined Space Entry Sign: The Contractor shall install one 14-inch by 10-inch aluminum confined space sign near each entry port to the tank. The sign shall be mounted to the tank in a manner subject to the approval of the project engineer. The sign shall be equal to a model W-DA225 as manufactured by Allstate Sign & Plaque Corporation.
5. Site Work, Grading & Fencing: See TP-01 and TP-60 of the Specifications.

PART 3 - EXECUTION

3.1 GENERAL DESIGN

Tank Designs shall be in accordance with Section 3 of AWWA D100-21. Use of Section 14 “Alternative Design Basis” will not be allowed.

A. The design snow load allowance shall not be reduced due to temperature.

B. Special wind conditions will not be required.

C. Seismic design will be required. See “Soil Investigation Report” for seismic data.

D. Roof shall be self-supporting steel cone or aluminum geodesic dome construction designed by Contractor’s Registered Professional Engineer.

E. No special corrosion allowance will be required.

F. Flush type clean-out fittings will not be required.

G. Inlet and Outlet Piping: A separate inlet and outlet piping system shall be installed on the water storage tank. The inlet piping invert shall be raised to the design elevation where reduced tank- head activates the tank re-filling process. Tank influent shall diffuse horizontally through an array of reduced-diameter inlet nozzles for improved mixing of tank contents. Per the engineered design drawings, inlet piping shall include a check valve, or valves, to prevent backflow from the tank through the inlet piping. Pinch-valves (Tide-Flex or approved equals) shall be installed on the diffusion array for this purpose. Tank outlet piping shall be equipped with a check-valve to prevent water from entering the tank through the outlet piping. Outlet piping shall be vertically and horizontally separated from the inlet piping to the maximum practical extent. Inlet and outlet piping shall enter and exit the tank per the design drawings.

3.2 SITE PREPARATION

A. The Contractor shall be responsible for site clearing, grading, and any necessary access road improvements shown on the plans or required by the contractor for access to the site. Any temporary access created by the contractor outside the limits of permanent improvements shall be replaced in original condition, including all drainage patterns.

3.3 WELDING

A. Welding shall be in accordance with AWWA D100-21 Section 8 Butt Joints. For base materials of thickness greater than 3/8 in., joints shall be double-welded and shall be either partial joint penetration or complete joint penetration welds at the option of the contractor's design professional.

B. The Contractor shall employ the services of a licensed independent welding inspector and all costs, including inspection, shall be included in the bid and paid by the Contractor. Welders shall be qualified by ASME Section IX requirements in all positions. It shall be the responsibility of this welding inspector to carry out inspection in accordance with provisions of Section 11 of AWWA D100-21.

C. Inspection shall include either spot radiographs or test segments or both at the option of the Contractor and shall be done in accordance with Section 11 of AWWA D100-21. The Engineer may designate up to 50 percent of the test sites. The welding inspector's written report must be received and accepted by the Owner or Owner's Representative before painting begins. A record of defective weld repairs and spot radiographs of repaired joints should be maintained at the work site.

D. When welding of the reservoir bottom is completed, it shall be tested and made completely tight. The joints shall be tested by air pressure or vacuum as specified in AWWA D100-21, Section 11.10.1.2.

3.4 FABRICATION

A. Fabrication shall be in accordance with Section 9 AWWA D100-21.

3.5 ERECTION

A. Erection shall be in accordance with Section 10 AWWA D100-21.

3.6 INSPECTION AND TESTING

Inspection and testing shall be in accordance with Section 11 AWWA D100-21.

A. The Owner will hire a qualified independent inspector to perform mill and shop inspections. The contractor shall schedule fabricating, welding, blasting and priming of the tank assemblies and accessories in batches to facilitate inspection by the independent inspector and/or Owner's Representative and to keep travel costs for inspections at a minimum.

B. Copies of the steel mill test reports shall be furnished to the Owner or Owner's Representative.

C. The Owner will hire a qualified inspector(s) to inspect the contractor's work including, but not limited to, the inspections described in this section.

D. The Contractor shall submit a written report, complying with this section, at the conclusion of welding work. This welding inspection report shall be signed by a licensed independent welding inspector. The report must be received and accepted by the Owner or Owner's Representative before steel coating begins.

E. The radiograph and inspection records shall be delivered to the Owner or Owner's Representative prior to acceptance of the structure. Any welding tests that do not meet AWWA requirements shall be noted. Records of all welding tests shall be maintained at the worksite. All repairs shall be made in accordance with AWWA D100-21.

F. Inspection of complete joint penetration welded-shell butt joints and load-bearing risers in contact with water shall be made by the radiographic method in AWWA D100-21.

G. The tank shall be field tested as per AWWA Section 11 after it is completed and before it is coated as follows:
   1. Vacuum testing shall be performed on all welded surfaces on the tank floor with a minimum of 2 psi vacuum pressure using soapsuds, linseed oil, or other suitable material for the detection of leaks. Any leaks found shall be corrected before erection continues. Tanks with concrete bottoms are exempt from this requirement.
   2. Following completion of erection and cleaning of the tank, the structure shall be tested for liquid-tightness by filling the tank to its overflow elevation. Arrangements for the provision of water for this purpose shall be made between the Contractor and the Owner.
   3. Any leaks disclosed by this test shall be corrected by the contractor in accordance with the manufacturer's recommendations, AWWA D100-21 and as approved by the Owner. The tank shall be refilled and retested after repairs are complete.

H. Hydrostatic test per AWWA D-100-21.

I. Water quality testing after hydrostatic test and disinfection per AWWA C652. Collect water sample from the tank. Sample shall be tested by a certified lab for the following parameters.
   1. Chlorine residual
   2. BAC-T
   3. VOC

3.7 FOUNDATION DESIGN

Foundation design shall be in accordance with Section 12 AWWA D100-21.

A. Backfill: Pipe cover shall be a minimum of 36 inches as shown on the detail drawing. Backfill requirements inside and/or underneath the tank foundation shall be as specified by the tank foundation designer.

B. Geotechnical Investigation: A geotechnical investigation of the project site, which addresses specific foundation design criteria, has been conducted and this information is provided for the Contractor’s reference as part of the Bidding Documents.

C. Excavation and Backfill: Existing soils and rock shall be excavated and removed as necessary to install the proposed select subgrade and foundation materials and to establish final site grade and drainage. The elevations for excavation and grading and the approximate existing contour lines are shown on the plans.

D. Inspection & Testing: A representative from an independent geotechnical firm shall be on site during earthwork operations in order to verify that the soils encountered are consistent with those identified in the geotechnical report and to conduct inspection and testing.
   1. Compaction testing is required for native subgrade, engineered fill, ring foundation footing and trench backfill.
   2. Unless specified otherwise in the design drawings, the contractor shall be required to conduct one (1) compaction test per requisite thickness of backfill lift (per the geotechnical report) during foundation backfilling. Successive compaction tests shall be a minimum of 10-feet apart linearly around the circumference of the foundation.
   3. Written certification showing all test results shall be provided by the geotechnical

firm to document construction in accordance with the geotechnical requirements within 2 working days of completion of foundation construction.

4. A written report shall be provided by the geotechnical firm including all test results and a copy of written certification as part of Closeout Submittals. The final report shall be signed and stamped by a Professional Engineer.
5. The Owner or Owner's Representative shall be notified if materials encountered are not consistent with soils as characterized in the geotechnical report. Unsuitable bearing conditions caused by the contractor's operations shall be remedied at the contractor's expense. Unsuitable bearing conditions that occur naturally shall be at the Owner's expense.

E. Concrete Testing: Shall be in accordance with Section 02 of the Technical Provisions.

3.8 SEISMIC DESIGN

A. Seismic design shall be in accordance with Section 13 AWWA D100-21.

3.9 CLEANUP AND MAINTENANCE OF SITE

A. After completing all construction, the Contractor shall remove all debris and waste materials from the site. The Contractor shall preserve the grading and drainage facilities constructed by others and ensure that surface water drainage is away from the tank.

3.10 CERTIFICATION

A. At the time of the final inspection, the Contractor shall provide to the Owner, or Owner's Representative, a notarized statement signed by a principal of the contracting company. The certificate shall state that the tank and foundation were designed, fabricated, erected and inspected in accordance with AWWA D100-21 as applicable. A 23-month warranty inspection shall be completed by the contractor per TP-34 of the specifications.

3.11 AS-BUILT DRAWINGS

A. Upon completion of all construction, and prior to final payment, the Contractor shall provide the Owner or Owner's Representative with a redlined set of construction drawings and/or shop drawings showing any changes or deviations made to any part of the contracted work. The as-built drawings shall be of content and clarity satisfactory to the Owner or Owner's Representative.

END OF SECTION

SECTION 333000 - SANITARY SEWERAGE UTILITIES

PART 1 - GENERAL

1.1 SUMMARY

A. Sanitary Sewerage outside of the building shall conform to the requirements of the White Mountain Apache Tribe IDIQ 2023 Modification of the 2019 PAO/SFC Technical Provisions, which have been included in the Project Documents for reference:
   1. Section 06 – Gravity Sanitary Sewers
   2. Section 07 – Sewer Service Line
   3. Section 43 – Sewer Force Mains

B. Sanitary Sewerage outside of the building shall conform to the requirements of the Maricopa Association of Governments Uniform Standard Specifications for Public Works Construction, 2025 Revision to the 2020 Edition:
   1. Sanitary Sewer Line Construction, Section 615
   2. Related sections of Part 600 – Water, Sewer, Storm Drain and Irrigation
   3. Related sections of Part 700 – Materials

1.2 Related Sections

A. Section 312333 – Trenching and Backfill

B. Section 331000 – Water Utilities

C. Section 334213 – Stormwater Culverts and Drainage Facilities

D. Construction Drawings

PART 2 - PRODUCTS - NOT USED

PART 3 - EXECUTION - NOT USED

END OF SECTION

SECTION 333213 - PACKAGED SEWAGE LIFT STATION

PART 1 GENERAL

1.1 SECTION INCLUDES

A. Sewage
   1. Pump Stations
      a. Extent of packaged pump station work required by this Section is indicated on Drawings and by requirements of this Section.
         i. Under this Section the Contractor shall furnish and install one (1) pre-packaged, pre–assembled pump station complete with submersible pumps, precast concrete pump chamber with integral valve vault structure, guide rail pump removal system, discharge piping with required supports and fittings, discharge check and plug valves, access hatches, valve vault access ladder, liquid level controls, duplex pump control panel, internal wiring and other required associate options and appurtenances.
         ii. The pre-packaged pump station shall be manufactured and pre-assembled off site to ensure product quality and consistency. The pre-package pump station manufacturer or their distributors shall provide sole-source responsibility to the owner through the warranty period.

1.2 RELATED SECTIONS

A. SECTION 03: Concrete

B. SECTION 33: Sanitary Sewerage Utilities

1.3 REFERENCES

Where applicable, the latest editions of the following standards shall form a part of this specification to the extent referenced. The publications are referenced to in the text of this specification by the basic designation only.

ACI INTERNATIONAL (ACI)

ACI 211.1	Standard Practice for Selecting Proportions for Normal, Heavyweight, and Mass Concrete
ACI 211.2	Standard Practice for Selecting Proportions for Structural Lightweight Concrete
ACI 304R	Guide for Measuring, Mixing, Transporting, and Placing Concrete
ACI 305R	Hot Weather Concreting
ACI 306R	Cold Weather Concreting

ACI 309R	Consolidation of Concrete
ACI 318	Building Code Requirements for Structural Concrete
ACI 350	Code Requirements for Environmental Engineering Concrete Structures and Commentary
ACI 517.2R	Accelerated Curing of Concrete at Atmospheric Pressure

AMERICAN SOCIETY FOR TESTING MATERIALS (ASTM)

ASTM A 36	Specification for Carbon Structural Steel
ASTM A 82	Specification for Steel Wire, Plain, for Concrete Reinforcement
ASTM A 615	Specification for Deformed and Plain Billet-Steel Bars for Concrete Reinforcement
ASTM C 31	Standard Practice for Making and Curing Concrete Test Specimens in the Field
ASTM C 33	Specification for Concrete Aggregates
ASTM C 39	Test Method for Compressive Strength of Cylindrical Concrete Specimens
ASTM C 40	Test Method for Organic Impurities in Fine Aggregates for Concrete
ASTM C 70	Standard Test Method for Surface Moisture in Fine Aggregate
ASTM C 117	Standard Test Method for Materials Finer than 75-µm (No. 200) Sieve in Mineral Aggregates by Washing
ASTM C 123	Standard Test Method for Lightweight Particles in Aggregate
ASTM C 136	Test Method for Sieve Analysis of Fine and Coarse Aggregates
ASTM C 138	Test Method for Density (Unit Weight), Yield, and Air Content (Gravimetric) of Concrete

ASTM C 150	Specifications for Portland Cement
ASTM C 172	Standard Practice for Sampling Freshly Mixed Concrete
ASTM C 192	Practice for Making and Curing Concrete Test Specimens in the Laboratory
ASTM C 231	Test Method for Air Content of Freshly Mixed Concrete by the Pressure Method
ASTM C 260	Specification for Air-Entraining Admixtures for Concrete
ASTM C 494	Standard Specification for Chemical Admixtures for Concrete
ASTM C 566	Test Method for Total Evaporable Moisture content of Aggregate by Drying
ASTM C 595	Specification for Blended Hydraulic Cements
ASTM C 617	Standard Practice for Capping Cylindrical Concrete Specimens
ASTM C 618	Specification for Coal Fly Ash and Raw or Calcined Natural Pozzolan for Use as a Mineral Admixture in Concrete
ASTM C 805	Test Method for Rebound Number of Hardened Concrete
ASTM C 857	Practice for Minimum Structural Design Loading for Underground Precast Concrete Utility Structures
ASTM C 858	Specification for Underground Precast Concrete Utility Structures
ASTM C 890	Practice for Minimum Structural Design Loading for Monolithic or Sectional Precast Concrete Water and Wastewater Structures
ASTM C 891	Practice for Installation of Underground Precast Concrete Utility Structures
ASTM C 913	Specification for Precast Concrete Water and Wastewater Structures

ASTM C 920	Specification for Elastomeric Joint Sealants
ASTM C 990	Specification for Joints for Concrete Pipe, Manholes, and Precast Box Sections Using Preformed Flexible Joint Sealants
ASTM C 1037	Practice for Inspection of Underground Precast Concrete Utility Structures
ASTM C 1064	Standard Test Method for Temperature of Freshly Mixed Concrete
ASTM C 1107	Standard Specification for Packaged Dry, Hydraulic-Cement Grout (Nonshrink)
ASTM C 1231	Standard Practice for Use of Unbonded Caps in Determination of Compressive Strength of Hardened Concrete Cylinders
ASTM C 1240	Standard Specification for Use of Silica Fume for Use as a Mineral Admixture in Hydraulic-Cement Concrete, Mortar, and Grout
ASTM C 1260	Standard Test Method for Potential Alkali Reactivity of Aggregates (Mortar-Bar Method)
ASTM C 1293	Standard Test Method for Determination of Length Change of Concrete due to Alkali-Silica Reaction
ASTM C 1602	Standard Specification for Mixing Water Used in the Production of Hydraulic Cement Concrete
ASTM C 1611	Standard Test Method for Slump Flow of Self-Consolidating Concrete

CONCRETE REINFORCING STEEL INSTITUTE (CRSI)

	Manual of Standard Practice
	Placing Reinforcing Bars

NATIONAL PRECAST CONCRETE ASSOCIATION (NPCA)

NPCA QC Manual	Quality Control Manual for Precast Concrete Plants

1.4 GENERAL REQUIREMENTS

Precast concrete units shall be designed and fabricated by an experienced and acceptable precast concrete manufacturer. The manufacturer shall have been regularly and continuously engaged in the manufacture of precast concrete units similar to that indicated in the project specifications or drawings for at least 10 years. In addition, the manufacturer shall employ a professional engineer registered in the state where the product is to be installed.

1.5 SUBMITTALS

The following items shall be submitted unless specified otherwise herein.

A. Preconstruction Submittals
   1. Upon request by the customer, submit quality control procedures established by the precast manufacturer's Quality Control Manual

B. General
   1. Submit One (1) electronic copy of complete project submittals for the Engineer's review and Approval. The submittal shall be assembled complete with index and cover, clearly identifying the Project Title, Customer, Project Engineer and submittal date. The submittal shall be compiled in a logical and organized manner.
   2. Partial or incomplete submittals will not be reviewed but instead will be returned as "Incomplete- Revise and Resubmit".
   3. Product Data: Submit manufacturer's specific technical product data, including installation and start up instructions, furnished specialties and accessories, and pump characteristic performance curves with selection points clearly indicated. Provide structural calculations stamped by a Professional Engineer registered in the State the project is being installed.

C. Drawings
   1. Submit manufacturer's assembly-type shop drawings indicating dimensions, mechanical & electrical components, complete bill of materials, structural layout & reinforcing per calculations and structural weights. Structural reinforcing drawings shall be stamped by a Professional Engineer registered in the State the project is being installed.
   2. The drawings for precast concrete units shall be furnished by the precast concrete producer for approval. These drawings shall show the design loads and standards have been met. Installation and construction information shall be included on shop drawings upon request. It is the responsibility of the project's engineer-of-record to verify that the design assumptions are suitable for the proposed application.
   3. For custom made precast concrete units, in addition to the requirements in C.1, the drawing for submittal shall show locations and dimensions to all penetrations and special embed items. Product dimensions and thicknesses shall be shown, and the drawing shall be to a common architectural scale with the precast producer's information in the title block.

D. Precast Concrete Unit Data
   1. Anchorage, Lifting Inserts and Devices
      a. For anchors, lifting inserts and other devices, the precast concrete producer shall provide product data sheets and proper installation instructions upon request.

2. Accessory Items
   a. For items including, but not limited to sealants, gaskets, pipe entry connectors, steps, racks, and other items installed before or after delivery, the precast concrete producer shall include proper installation instructions and relevant product data upon request.

E. Design Data
1. The precast concrete producer shall supply submittals showing design loading and material specifications for supplied products. At a minimum, the following shall be shown on the submittals:
   a. Live load used in design
   b. Vertical and lateral earth loads used in design
   c. Depth of soil fill on the structure
   d. Water table depth used in calculations
2. Upon request, the precast concrete producer shall supply precast concrete unit design calculations and concrete mix design proportions and appropriate mix design test data. Structural design calculations shall be sealed by a licensed professional engineer in the state of this project.

F. Test Reports
1. Upon request, the precast concrete producer shall supply copies of material certifications and/or laboratory test reports, including mill tests and all other test data, for Portland cement, blended cement, pozzolans, ground granulated blast-furnace slag, silica fume, aggregate, admixtures, and curing compound proposed for use on this project
2. Upon request, the precast concrete producer shall submit copies of test reports showing that the mix has been successfully tested to produce concrete with the properties specified and will be suitable for the project conditions. Such tests may include compressive strength, plastic air content, temperature of freshly mixed concrete, and slump of freshly mixed concrete. Special tests for precast concrete items shall be clearly detailed in the specifications
3. Upon request, the precast concrete producer shall supply copies of in-plant QA/QC inspection reports.

G. Control System Submittal Requirements
1. The base bid control system shall be the Duplex Pump Control With Submersible Transducer Primary Level with Float Backup system as manufactured by Dynamic Motor Controls, Saint Augustine, Florida and represented by James Cooke & Hobson. All bidding contractors shall base their bids on the base bid control system. Alternative deductive systems will be considered only after contract award and must be specified with any applicable deducts at bid time in order to receive consideration. Bidder must submit along with his bid package appropriate cut sheets, circuit drawings, and detailed bill of materials for any alternative control systems. Acceptance of an alternative system is subject to approval of its quality and conformance with established standards. The contractor shall reimburse the engineer for any additional expenses to review the system and pay additional costs associated with use of the alternative system.
2. The Engineer will consider proposals for substitution of materials, equipment, methods, and services only when such proposals are accompanied by full and complete technical data and all other information required by the Engineer for the proposed substitution.

a. Substitution of materials, equipment, methods, and/or services is not allowed unless such substitution has been specifically approved by the Engineer.
b. Where the phrase "Or Equal", "Pre-approved", or "Pre-approved equal" occurs in the specification, do not assume that any materials, equipment, methods, or services will be approved as equal unless the item has been specifically pre-approved by the Engineer.

1.6 DESIGN

All components of the pre-package submersible pump station with integral valve vault shall be designed for all stresses that may occur during continuous operation, and for any additional stresses that may occur during fabrication or erection. Workmanship shall be of high quality in all respects. All equipment shall be constructed of materials that will maintain their functional integrity during continuous handling, and in contact with the liquids and atmosphere, likely to be encountered in this application. The following items shall be accounted for in the precast unit design.

A. Precast Concrete Unit Design
1. Design standard precast concrete units to withstand design load conditions in accordance with ACI 350. Design must also consider stresses induced during handling, shipping, and installation in order to avoid product cracking or other handling damage. Design loads for precast concrete units shall be indicated on the shop drawings and designed by a licensed professional engineer.
2. The structural design shall take into account discontinuities in the structure produced by openings.
3. The Precast Pump Station with Integral Valve vault shall be designed to support its own weight as well as the minimum superimposed loads tabulated below. All additional equipment shall be accounted for in the design of the elements.
   a. Pump Station with Integral Valve Vault
      i. Top Slab
         a) Live Load & Impact Load – AASHTO HS20
      ii. Floor Slab (valve vault & base)
         a) Live Load – 100 psf
      iii. Exterior Walls
         a) All exterior walls below finished grade shall be designed for an equivalent fluid pressure of 90.0 psf minimum caused by saturated earth pressure. The top of the pressure diagram is assumed to originate at finished grade. In addition to the soil pressure, a Live Load Traffic Surcharge shall be applied according to the AASHTO Specification.
4. The structures shall be designed to prevent floatation without the benefit of skin friction and the weight of mechanical equipment when the ground water level is at finished ground surface. The factor of safety against uplift calculated as a ratio of the total resisting force (excluding skin friction and the weight of the equipment) to the total hydrostatic uplift force shall be at least 1.15. The net uplift force shall be transferred to the anti-buoyancy collar.

B. Joints and Sealants
1. Joints and sealants between adjacent units shall be of the type and configuration indicated on the shop drawings meeting specified design and performance requirements.

C. Concrete Mix Design
1. Concrete type
a. For non machine cast products, the concrete shall be self-consolidating concrete which produces minimal bugholes and does not segregate.
2. Concrete Proportions
a. Selection of proportions for concrete shall be based on current self-consolidating concrete mix design techniques. At a minimum, ACI 211.1 shall be used.
b. Upon request, the precast concrete producer shall submit a mix design for each strength and type of concrete that will be used. Submitted mix designs shall include the quantity, type, brand and applicable data sheets for all design constituents as well as documentation indicating conformance with applicable reference specifications.
3. Concrete Mix
a. Concrete mix shall include a corrosion resistant add mixture ConBlock CDA crystalline water proofing and ConBlock MIC antimicrobial H2S protection or approved equal
4. Durability and Performance Requirements
a. Concrete Compressive Strength
i. Precast concrete units shall have a 28-day compressive strength of 6000 psi for SCC.
b. Water-Cementitious Ratio
i. Concrete that will be exposed to freezing and thawing shall contain air and shall have a water-cementitious ratio of 0.45 or less.
c. Air Content
i. The air content of concrete that will be exposed to freezing conditions shall be within the limits given below

Nominal Maximum Aggregate size (in)	Air Content %	
	Severe Exposure	Moderate Exposure
3/8	6.0 to 9.0	4.5 to 7.5
1/2	5.5 to 8.5	4.0 to 7.0
3/4	4.5 to 7.5	3.5 to 6.5
1	4.5 to 7.5	3.0 to 6.0
1-1/2	4.5 to 7.0	3.0 to 6.0
* For specified compressive strengths greater than 5000 psi, air content may be reduced 1%		

1.7 QUALITY ASSURANCE

The precast concrete producer shall demonstrate adherence to the standards set forth in the plant Quality Control Manual. The precast concrete producer shall meet the requirements written in subparagraph 1.7.A. The Precast Concrete Pump Station Manufacturer shall have a minimum of ten (10) years successful experience in the design and the assembly of factory-built, prefabricated, pre-assembled Pump Stations. In addition, the Manufacturer shall have made no less than ten (10) Pump Stations similar to the one on this project. Evidence shall be

submitted to verify these requirements are met prior to being deemed an acceptable manufacturer.

A. Qualifications, Quality Control and Inspection
   1. The precast producer shall maintain a permanent quality control department.
   2. The precast concrete producer shall have a quality control program which is audited for compliance annually by persons outside that plant's employee structure.
   3. Upon request, the precast concrete producer shall supply a copy of their quality control manual.

B. Quality Control
   1. The precast concrete producer shall show that the following quality control tests are performed as required and in accordance with the ASTM International standards indicated
      a. Concrete Testing
         i. Slump: A slump test shall be performed at least once per day per mix design used. Slump tests shall be performed in accordance with ASTM C 1611 for self-consolidating concrete.
         ii. Temperature: The temperature of fresh concrete shall be measured each time a slump, air content, or compressive strength tests are made. Temperature shall be measured in accordance with ASTM C 1064.
         iii. Compressive Strength: At least four compressive strength specimens shall be made each day for each mix design unless otherwise specified. In accordance with ASTM C 31, C 39, C 192.
         iv. Air Content: Tests for air content shall be performed if the mix design specifies air entrainment. The air content will be measured in accordance with ASTM C 231. The Air Content shall be measured once per day per mix design.
         v. Density (Unit Weight): Tests for Density (Unit Weight) shall be performed monthly for each mix design used at a minimum. Tests shall be in accordance with ASTM C 138
      b. Aggregate Testing
         i. A full set of aggregate tests shall be performed on each aggregate at least annually by an independent testing agency or an in house test lab. These tests will include gradations (ASTM C136), Soundness (ASTM C 88), Organic Impurities (ASTM C 40), Sand Equivalent for fine aggregates only (ASTM D 2419)
         ii. Potential reactivity shall be performed once per each aggregate source, and when aggregate sources change (ASTM C 1260 or C 1293)
         iii. Monthly, at a minimum, gradations shall be performed per ASTM C 33.
         iv. Aggregate Moisture tests: Moisture tests on aggregates shall be performed in accordance with ASTM C 70 or ASTM C 566. Fine aggregate moisture content tests shall be performed at least once per day if there are no moisture meters, otherwise it shall be performed once per month. Alternatively the speedy moisture test is acceptable (ASTM D 4944).

c. Preplacement Check
   i. All products shall be inspected for accuracy prior to placing concrete. Checks shall include, but not be limited to, form condition and cleanliness, form dimensions, joints, release agent, blockouts, inserts and locations, lifting devices, reinforcing steel size, spacing, clearances and proper placement.
   ii. Preplacement checks shall be documented and initialed by the inspector. A drawing with verifications of the above criteria can be used as documentation.
d. Postplacement Check
   i. All products shall be inspected for accuracy after the concrete forms have been removed. Checks shall include, but not be limited to, dimensional checks, finishing, insert locations, squareness, honeycombing, cracking, marking, coatings, racking, hole size and location. Postplacement checks may require a corrective action report.
   ii. Postplacement checks shall be documented and initialed by the inspector. A drawing with verifications of the above criteria can be used as documentation.

2. Copies of the test results and Inspections above shall be available upon request.

C. Outside Inspection
1. The customer or customer's agent (specifier) may place an inspector in the plant when the units covered by this specification are being manufactured. The precast concrete producer shall give notice of 3 days prior to the time the precast concrete units will be available for plant inspection

D. All equipment and materials furnished in the pump station shall be new and free of defects. All equipment shall be the manufacturer's latest and proven design.

E. All electrical materials, devices, and equipment shall be UL listed wherever applicable.

F. All equipment and installations shall meet the National Electric Code.

G. Control System Manufacturer Experience
1. The manufacturer of the control system shall be certified by Underwriters Laboratories (UL) as being a UL 508A listed systems panel manufacture certified to install a serialized label for quality control and insurance liability considerations.
2. The manufacturer of the control system must submit to the Consulting Engineer documentation proving experience in successfully designing and manufacturing at least 10 similar systems of a similar scope.
3. The manufacturer of the control system must carry blanket liability insurance of at least $1 million.

1.8 DELIVERY, STORAGE, AND HANDLING

A. Handling
1. Precast concrete units shall be handled and transported in a manner to minimize damage. Lifting devices or holes shall be consistent with industry standards. Lifting shall be accomplished with methods or devices intended for this purpose as indicated on the shop drawings. Upon request, the precast concrete producer shall provide documentation on acceptable handling methods for the product.

B. Storage
   1. Precast concrete units shall be stored in a manner that will minimize potential damage.

C. Delivery
   1. Precast concrete units shall be delivered to the site in accordance with the delivery schedule. Upon delivery to the jobsite, all precast concrete units shall be inspected by the customer's agent for quality and final acceptance.

D. Final Acceptance
   1. Upon final acceptance, the customer's agent acknowledges and understands the appropriate methods for handling the accepted precast concrete unit(s). Upon acceptance by the customer or customer's agent, the precast concrete manufacturer is not responsible for replacing damaged product resulting from improper handling practices on the job site.

1.9 PLANT CONDITIONS

Any plant producing precast concrete units for this specification shall have a written, implemented, comprehensive safety and environmental program. Upon request, documentation shall be provided to show the safety program meets the following minimum requirements.

A. Safety Program Requirements

   The safety program shall include the following written and documented parts as a minimum.
   1. Housekeeping
   2. Lock-Out Tag-Out
   3. Machine Guarding
   4. Risk Assessment
   5. Personal Protective Equipment
   6. Contractor and Visitor Safety
   7. Cranes and Lifting Equipment Safety
   8. Ergonomics and handling Safety
   9. Fall Protection

B. Health and Safety Management System Requirements

   The health and safety management system shall be used to manage the safety program and all measureable aspects.

C. Environmental Management System Requirements

   The Environmental Management System shall encompass the following:
   1. Air Pollution Control
   2. Water and Wastewater Management

D. Recordable rate
   1. The recordable rate shall be below the industry average. If the industry average is not readily available, assume a value of 6 recordable injuries per 200,000 hours worked as the industry average.

1.10 SINGLE SOURCE RESPONSIBILITY

A. To ensure that all equipment required for the installation of the pre-package pump station is properly coordinated and will function as a unit in accordance with the intent of these specifications, the Contractor shall obtain all the equipment specified under this section, from a single supplier with whom the responsibility for the proper function of all equipment, regardless of manufacturer, as an integrated and coordinated system shall be vested. This requirement is to establish unit responsibility for all the equipment with the equipment supplier. The use of the word responsibility relating to the equipment supplier is in no way intended to relieve the Contractor's ultimate responsibility for equipment coordination, installation, operation, and guarantee.

B. Factory pre-assembly: During fabrication and before shipment, all equipment shall be fully factory installed to verify all proper clearances. All installed equipment, unless crossing structural joints, shall remain in the precast structure during travel to the jobsite and final re-assembly.

C. The manufacturer shall furnish the services of an experienced service technician to check the installation, and provide with the Owner, a certificate indicating that the pre-packaged submersible pump station has been installed in accordance with the manufacturer's recommendations.

PART 2 PRODUCTS

2.1 MANUFACTURERS

A. Acceptable Manufacturer: Oldcastle Precast Inc.

1. This specification is based on the precast concrete OneLift™ package pump station product line manufactured and pre-assembled by Oldcastle Infrastructure of Avon, CT (OneLift Model RC509). The OneLift™ is chosen as the basis of design for, quality manufacturing, compact size, single structure differential settlement elimination, ease and speed of installation, and overall project timeline savings.
2. Requests for substitutions will be considered in accordance with provisions of Section 01

2.2 PRODUCTS

A. Precast Concrete Pump Station Sections with Valve Vault

1. The Pump Station with Integral Valve Vault shall be composed of precast reinforced concrete units, rectangular in shape with rounded corners. The precast structures shall be monolithically cast and have minimum interior dimensions of 5' wide by 9' long with 2.5' radius corners (RC509), or 6' wide by 11' long with 2' radius corners (RC611). The precast base section will be supplied with an extended buoyancy collar to withstand upward buoyant forces with ground water "at grade" or "otherwise listed". Overall structure heights shall be as shown on the contract drawings and range from 10'-10" to 24'-10", in product-standard 2', 3' & 4' increments.
2. Exterior Walls shall be a minimum of 6 inches thick, integral valve vault common wall and floor shall be a minimum or 4 inches thick, station floor and buoyancy footing shall be a minimum of 8 inches thick, and the roof slab with hatches shall be a minimum of 12 inches thick.
3. The Integral Valve Vault shall be located in the pump station structure as shown on the contract drawing, to conserve site space and to eliminate the possibility of

differential settlement. Conventional means, utilizing two (2) separate structures for the pump station and the valve vault **will not be accepted as an equal**.

4. The Precast Structures shall be comprised of product-standard: base, riser sections, integral valve vault, optional vault riser shims as required, and station cover.
5. The Pump Station Manufacturer shall have a production facility in which all work associated with structural fabrication, mechanical/electrical pre-assembling and product final inspection of the pump station will be performed. The building shall keep the pump station components protected from the elements and kept at an ambient temperature of at least 45 degrees Fahrenheit. No concrete shall be batched and placed when the ambient temperature is below 50 degrees Fahrenheit.
6. All wall penetrations shall be formed utilizing hole-formers or cored drilled holes for manhole boots, and galvanized threaded couplings with waterstops for electrical connection.
7. All cast wall openings for ductile iron, PVC or galvanized steel pipe shall incorporate adjustable rubber manhole boots for a watertight seal.
8. All Precast components shall be fabricated on steel forms with machined rings to form accurate bell and spigot joint surfaces to ensure watertight joints.
9. The Horizontal joints between precast sections shall be sealed with a vulcanized butyl rubber joint material conforming to AASHTO M-198. The joint material shall be “Conseal CS-102” as manufactured by Concrete Sealants or approved equal.
10. All surfaces of the precast structures shall be smooth, even, and free from roughness, irregularities and other defects. The surfaces shall be suitable for receiving exterior treatments as specified elsewhere herein.
11. A Crystalline Waterproofing Additive shall be used in the concrete mix design. The system shall cause the concrete to become sealed against the penetration of liquids from any direction, and shall protect the concrete, surface to surface, from deterioration due to acidic environmental conditions.
    a. Dose rate of additive shall be per manufacturers’ recommendations. All concrete used for the structural components and non-structural components (including fill concrete, common interior wall and floor of integral valve vault) shall attain a minimum 28-day compressive strength of 6,000 psi.
    b. The Waterproofing Additive shall be ConBlock CDA, as manufactured by Concrete Sealants, Inc., or OneLift manufacturer-approved equal.
12. An Integral Antimicrobial Concrete Additive shall be used in the concrete mix design to protect the structure against deterioration from harsh H2S environments through the entire thickness of the structure. The product shall be an EPA registered liquid integral concrete admixture for the prevention of microbial induced corrosion (MIC) typically found in concrete structures in sewage and drainage systems. The additive shall molecularly bond to cement hydration products acting to rupture the cellular membrane of bacteria and other microorganisms harmful to concrete through an electro-physical mechanism on contact. The Integral Antimicrobial Concrete Additive shall contain a minimum of 3.6% active ingredient. The dosage rate shall be 12 fluid ounces of additive per one hundred pounds of cementitious materials content, when used in conjunction with the “Topical” secondary treatment. All concrete used for the structural components and non-structural components (including fill concrete, common

interior wall and floor of integral valve vault) shall include the admixture as described above.

The secondary “Topical” concrete surface treatment shall be a saline based, water repelling, “Blue” Tinted Concrete Sealer containing an EPA registered antimicrobial and shall be applied to interior concrete surfaces that will be exposed to the H2S environment. The sealer shall create a concrete surface that is not favorable to the growth of microorganisms harmful to concrete. The sealer shall be applied to concrete product with (MIC) admixture, when cooled to ambient temperature, and when surfaces are dried. The sealer shall be applied at a rate of 200 square feet per gallon.

a. The “Integral Antimicrobial Concrete Additive” shall be ConBlock MIC, as manufactured by Concrete Sealants, Inc., or OneLift Manufacturer-approved equal.
b. The “Tinted Concrete Sealer” shall be ConBlock Topical, as manufactured by Concrete Sealants, Inc., or OneLift Manufacturer-approved equal.

13. An exterior damp-proofing coating shall be factory applied to the below grade vertical surfaces of the structure. Damp-proofing material shall be fibered cold-applied solvent based asphalt mastic brush or roller applied at a rate of 1-gal per 25SF. Damp-proofing material shall meet ASTM# D-4471 Type 1 and Federal Spec# SS-A-694d(AF). Damp-proofing shall be Karnak 83AF or approved equal.

B. Pump Removal Rail System

1. The pump station shall be supplied with a stainless steel guide rail pump removal system, to facilitate emergency and routine maintenance in removing and re-installing the submersible pumps from the top of the station. The guide rail system will include lower guide brackets incorporated in the pump base elbow, 316-stainless upper guide brackets, 316-stainless intermediate guide brackets as may be required per the pump manufacture, and 304-stainless steel Sch 40 guide rails of size and quantity as dictated by the select pump manufacturer and model.
2. Guide rail components shall be assembled and installed plumb to the pump station structure and shall allow for pump removal and re-installation without interfering with the access hatch or frame. All assembly hardware shall be 316-stainless steel.

C. Hazardous Location Compliance

1. The wet well and the area within 2 feet of the wet well has been classified as a Class 1, Division 1, A Hazardous Location as defined by the National Electrical Code. All electric wiring and motors located within the subject area shall be in strict compliance with these standards. The shop drawings carry the manufacturer’s certification that all equipment located in the subject area meets the requirements of NEC Class 1, Division 1 Criteria and the Underwriter’s Laboratory (UL).

D. Pump Station Access Aluminum Frame and Cover

1. Furnish and install (1) aluminum pump access hatch 30” x 48”, nominal interior dimension, flush with precast cover, H20-ASTM C1802-14- Load Level 4 for accidental traffic load rating with 316-stainless steel hardware. Cover will be minimum ¼” diamond plate with stainless steel slam lock and weather plug, lift handle which sits flush with cover, recessed pad lock clip (pad lock by others),

hold open arm to lock cover in 90-degree position, heavy duty stainless hinges. Frame to be angle style with continuous 1” anchor flange and full slab-height skirt to show no exposed concrete when hatch is open, exterior surfaces in contact with concrete to receive one coat bituminous paint.

2. Pump access hatch to be supplied with integral safety grating system. The safety grate shall be made of 6061-T6 aluminum and designed per the “Specifications for Aluminum Structures”. The grating shall be designed to withstand H20-ASTM C1802-14- Load Level 4 for accidental traffic load rating. Each grate shall be supplied with a heavy duty, stainless steel gas shock for ease of operation when opening. Each grate shall be provided with a permanent hinging system. Grates will lock the in the 90-degree position once opened. Grate shall be coated with an OSHA type safety orange color, base coat is a thermosetting epoxy powder coat finish with a minimum thickness of 2-4 mils. The top coat is a mar-resistant, TGIC polyester powder coating with a minimum thickness of 2-4 mils. Each coat shall be baked at 350-375 degrees F until cured.
3. Access hatches to be manufactured by USF Fabrication, Inc., Hialeah, FL, or approved equal.

E. Valve Vault Aluminum Access Frame and Cover
1. Furnish and install (1) aluminum valve vault access hatch, 30” x 36” nominal interior dimension single door, flush with precast cover, H20-ASTM C1802-14- Load Level 4 for accidental traffic load rating, with 316 stainless steel hardware. Cover will be minimum ¼” diamond plate with stainless steel slam lock and weather plug, lift handle which sits flush with cover, recessed pad lock clip (pad lock by others), hold open arm to lock cover in 90-degree position, heavy duty stainless hinges. Frame to be channel style with 1 ½” NPT drain port in the bottom of the channel, continuous 1” anchor flange and full slab-height skirt to show no exposed concrete when hatch is open, exterior surfaces in contact with concrete to receive one coat bituminous paint. Hatch will be supplied with a heavy duty, stainless steel gas shock, for ease of operation when opening cover.
2. Valve vault access hatch to be supplied with integral safety grating system - same as described for pump access hatch above.
3. Access hatches to be manufactured by USF Fabrication, Inc., Hialeah, FL, or approved equal.

F. Polyvinyl Chloride (PVC) Piping and Fittings
1. All PVC pressure piping and fittings for water and wastewater treatment are to be SCH80. Corrosion resistant pressure pipe, IPS sizes, for use at temperatures up to and including 140°F. Pressure rating (120 psi to 1230 psi) varies with schedule, pipe size, and temperature.
2. The material used in the manufacture of the pipe and fittings shall be domestically produced rigid polyvinyl chloride (PVC) compound, Type 1 Grade 1, with a Cell Classification of 12454 as defined in ASTM D1784, trade name designation H707 PVC. This compound shall be gray in color and shall be approved by NSF International for use with potable and non-potable water (NSF Std 61). All sizes of PVC Schedule 80 pipe & fittings shall be manufactured in strict accordance with the requirements of ASTM D1785 for physical dimensions and tolerances, and all performance test requirements of ASTM D1785.

G. Polyvinyl Chloride (PVC) Ball Valves
   1. All ball valves shall be of the flanged model with one-piece capsule and shall open counterclockwise. The valves shall be rated for 250psi at 73 degrees F.
   2. The ball valve shall be of full-port design to minimize flow restriction to the lowest possible pressure drop. Full flange face gaskets having a 50 to 70 durometer A hardness shall be used.
   3. Ball valve bodies shall be constructed of PVC, with Teflon seats and Viton seals.
   4. PVC ball valves shall be manufactured by Haward, Nibco Inc., or approved equal.

H. Polyvinyl Chloride (PVC) Check Valves
   1. All check valves shall be of the flanged model with one-piece capsule. The valves shall be rated for 150 psi at 73 degrees F.
   2. Free oscillation of ball in guide ribs facilitates full port flow with minimum of turbulence and chatter. Full flange face gaskets having a 50to 70 durometer A hardness shall be used.
   3. Check valve bodies and ball shall be constructed of PVC, with EPDM seals.
   4. PVC check valves shall be manufactured by Hayward, Nibco Inc., or approved equal.

I. Ductile Iron Pipe and Fittings
   1. All ductile iron pipe shall be designed in accordance with ANSI A21.50 and shall be manufactured in accordance with ANSI A21.51. Pipe for use with grooved end couplings shall have grooved ends in accordance with AWWA C606.
   2. Pipe thickness class shall be Pressure Class 350 for use with threaded flanges, unless specified otherwise on the product drawings.
   3. Flanged joints shall conform with ANSI A21.15, utilizing long-hub flanges which shall be screwed on tight by the foundry before they are faced and drilled.
   4. Fittings shall conform to the requirements or ANSI A21.10 and shall be of a pressure classification at least equal to that of the pipe with which they are used. Flanged fittings shall be faced and drilled in accordance with ANSI A21.10.
   5. All ductile iron piping and fittings shall be epoxy lined and coated on the inside and outside.

J. Flange Type Couplings
   1. Flange couplings shall be mounted on each pump base elbow to ensure proper pressure seal while providing a minimum of assembly flexibility. The flange couplings shall be fusion bond epoxy coated and supplied with 304-stainless assembly and mounting hardware for harsh & wet environments. The pipe gasket and O-ring seal shall be EPDM
   2. To ensure correct fitting of pipe and couplings, all flange couplings shall be furnished by the pipe supplier and shall be of the pressure rating of at least that of the pipeline in which they are to be installed.
   3. The flange couplings shall be Smith-Blair Inc., model 912 or approved equal.

K. Grooved Flange Adapter
   1. Grooved flange adapters shall be supplied where shown on the product drawings and shall conform to AWWA C606. The flanges are designed for use on radius cut grooved pipe with minimum wall thickness of ANSI/AWWA C151/A21.51, Class 53 DIP, or a transition coupling may be required for connection of grooved end IPS steel pipe to grooved end AWWA ductile iron pipe.
   2. The housing coating shall be bituminous coated unless dictated otherwise to

match special pipe coatings. The gasket shall be Grade “M” Halogenated Butyl (brown color code) and bolting hardware of 304-stainless steel.

3. The grooved coupling shall be Victaulic style 341Vic-Flange or approved equal.

L. Pipe supports

1. Piping shall be supported in the valve vault by means of adjustable stainless steel floor supports stands which cradles the pipe/valve flanges. The support stands shall be floor mounted with 316-stainless expansion bolting hardware. Where piping enters and exits the vault structure; aluminum wall supports angles with 304-stainless U-bolts and 316-stainless expansion bolt wall-mounting hardware shall be utilized in (3) locations.
2. Piping shall be supported in the pump station by means of a common 304-stainless fabricated angle brace spanning the width of the station and mounted with wall brackets and 316-stainless hardware. Both vertical discharge pipes shall be supported from the brace by means of individual 316-stainless U-bolts and bolting hardware.
   a. (1) Common pipe support assembly at mid length shall be required when the vertical discharge pipe lengths exceed 10’-0”.
   b. (2) Common pipe support assemblies at equal spacing shall be required when the vertical discharge pipe lengths exceed 14’-0”.

M. Wall Penetrations

1. Where wall penetrations are called for on the plans; mechanical piping shall utilize cast or cored openings with flexible manhole boots. Flexible rubber boots shall consist of EPDM polymer compounds meeting ASTM C923 material performance requirements. Expansion banding and straps shall be 304-stainless material and the connection between boot and structure shall utilize an expansion wedge system with 304-stainless wedge and hardware components.
2. Electrical conduit penetrations will utilize aluminum electrical couplings assemblies with 2” wide minimum waterstop, secured to the structure with watertight seal, or cored openings with mechanical rubber seals to fill the annular spacing between electrical conduit and precast wall structure. Mechanical seals shall be Link Seal by Thunderline Corp. or approved equal and shall utilize 304-stainless assembly hardware. Mechanical seals may need to be employed when an exterior junction box option is factory mounted to the station.

N. Plug Valves

1. Plug valves shall be of the non-lubricated, quarter-turn, eccentric type with flanged ends and lever operated (up to 4” valves), and hand wheel operated (for 6” valves), in full conformance with the latest revision of the AWWA C517 Standard.
2. Valves sizes 3” to 6” shall have a minimum 175 PSI pressure rating. Plug Valves shall be full ported for reduced pumping costs and improved flow characteristics. The valves shall have the following minimum full open flow coefficients (Cv): 3”=569, 4”=982, 6”=1997.
3. Flange diameter, thickness, and drilling shall conform to ANSI B16.1 Class 125.
4. Valve shaft seals shall be of the self-adjusting U-cup design for reduced maintenance and replaceable without removing the cover from the valve.
5. Valves shall have bodies and covers of ductile iron per ASTM A536 for superior strength. Valve sizes 3” and larger shall have body seats of 95% welded nickel applied directly to the body and machined to a smooth finish. Sprayed, plated or

removable seats are not acceptable. Valves shall have plugs made from ductile iron per ASTM A536 with a vulcanized synthetic rubber seat facing tested per ASTM D429 for all sizes.

6. Valves shall be provided with stainless steel thrust bearings on the upper and lower plug shaft to eliminate plug-to-body contact and ensure long lasting plug-to-seat alignment. Grit seals shall be provided on the upper and lower bearing journals to minimize the entrance of grit into the shaft seal and bearing areas.
7. Valves shall be coated internally and externally with 6-8 mils NSF approved two part epoxy paint for corrosion protection.
8. Valves shall be Golden Anderson Figure 517 “ECO-Centric” or approved equal.

O. Station emergency bypass assembly
1. Where shown on the drawings or called out otherwise; proved an emergency bypass piping assembly prior to the common discharge in the valve vault. The assembly will consist of an isolation plug valve, piping and fittings conforming with adjacent, wall mounted pipe support conforming with adjacent supports, and an aluminum male quick-connect coupling with dust cap. Access to the emergency bypass quick connect shall be granted by the clear opening of the valve vault access hatch above. Bypass assembly hardware shall be 304SS minimum.

P. Gasket, Bolts, Nuts
1. For flange joints, gaskets shall be a minimum of 1/8” thick full faced gaskets. Gaskets shall be of composition suitable for exposure to fluids within the pipe. Gaskets shall meet AWWA C110, C111, and C115 performance standards.
2. Flange joints shall be bolt-assemble utilizing the full faced gasket. Bolting hardware, number & size, shall conform to the same ANSI standards as the flange. Bolts and nuts shall be 304-stainless steel, heavy hex Grade B conforming to ASTM A493/494.

Q. Station Vent
1. A passive station vent shall be supplied using 4” Sch80 PVC piping & fittings, and a stainless insect screen. The vent will be factory assembled and mounted to the exterior of the station, where the venting will rise above the station, and turn downward (gooseneck), and end with insect screen minimum 3’ above finish grade.
2. (optional carbon canister) A passive station vent shall be supplied using 4” Sch80 PVC piping & fittings, and a top mounting carbon canister unit. The vent will be factory assembled and mounted to the exterior of the station, where the venting will rise above the station a minimum 3’ above finish grade, and end with a top mounted carbon canister unit with rain shield. The canister housing shall be aluminum with 4” mounting flange, rain shield, with power coat finish. The replaceable canister shall contain a minimum of 12 pounds of activated carbon and shall be safe for recyclable disposal.
3. The carbon canister assembly shall be Vent Pure T-4” Activated Carbon Vent or approved equal.
4. The complete factory mounted vent assembly will be removed from the station and shipped separately to the jobsite due to shipping height restrictions, for field reattachment by the site contractor.

R. Cable support (no interior junction boxes)
   1. Pump and level control SJO jacketed cables shall be properly supported within the pump station via stainless strain reliefs (Kellems Grip) or other support methods and hung from stainless equipment hooks positioned in the pump access hatchway. Cable weight will not be transferred to cable entre conduits or wall couplings.

S. Exterior Termination Cabinet
   1. A NEMA 4X, stainless steel, weather-tight pump station exterior termination cabinet shall be factory furnished and mounted to the exterior of the pump station with a minimum of 2' clearance between the bottom of the cabinet and the top surface of the pump station. The cabinet will house divided areas for both power/control and low voltage level control. The termination cabinet shall be 304 stainless steel with back plate, interior area dividers, power/control/low voltage terminals, continuous door hinge, quarter-turn latch hardware and pad locking hardware. The cabinet size will be 16"H x 16"W x 6"D minimum.
   2. The pump power, pump control and float switch conductors shall be connected to suitable power and terminal blocks inside the cabinet. Pump and level control SJO jacketed cables shall be properly supported within the pump station via stainless strain reliefs (Kellems Grip) or other methods, so that cable weight is not transferred to the terminal strips.
   3. The exterior termination cabinet shall be mounted to the pump station with a fabricated type 304 stainless steel Unistrut frame with all type 316 stainless steel fasteners.
   4. Conduits, fittings and seal between the termination cabinet and pump station will be RGS construction and will be factory mounted. Conduits, fittings and seals between the termination cabinet and pump control panel shall be supplied and installed by the site electrician. All final conductor termination and filling of seal fittings, shall be completed on site by the site electrician.
   5. The complete factory mounted termination cabinet will be removed from the station (via station mounting bolts) and shipped separately to the jobsite due to shipping height restrictions, for field reattachment by site electrician.

T. Gauge Assembly
   1. A discharge gauge assembly shall be supplied on each pump discharge pipeline as they enter the valve vault for monitoring system performance. The assembly shall be equipped with a ½" Stainless process connection, ½" isolation ball valve, stainless diaphragm seal, 4 ½" pressure gauge with stainless connection hardware. Discharge pressure range shall be 0-200psi.
   2. All gauge and diaphragm seal assemblies shall be of a 1- piece welded design with a full scale accuracy of ±1.0%. The gauge shall have a P.E.T. resin case, 4" diameter, glycerin fill fluid, with a 316 stainless steel movement, bourdon tube and connection welded to a 1 pc 316ss diaphragm seal. The fill fluid shall be DC200 silicone. Threaded connections between the gauge and the diaphragm seal will not be accepted. The diaphragm seal shall be all 316 stainless steel including diaphragm and have a ½" NPT male 316ss lower connection. The assembly shall be factory assembled and calibrated.
   3. The gauge assembly shall be connected to the discharge line as shown on the plans.

4. The gauge & seal assembly shall be PT45P/MS8PTas manufactured by Reotemp or approved equal.

2.3 MATERIALS

Except as otherwise specified, material shall conform to the following section.

A. Materials

Cement	ASTM C 150 (Type I, II, III, or V)
	ASTM C 595 (for Blended Cements)
Silica Fume	ASTM C 1240
Fly Ash and Pozzolans	ASTM C 618
Ground Granulated Blast-Furnace Slag	ASTM C 989
Water	ASTM C 1602 (the use of reclaimed/recycled water shall be permitted)
Aggregates	ASTM C 33 (and aggregate specifications)
Air Entraining Admixtures	ASTM C 260
Accelerating, Retarding, Water Reducing Admixtures	ASTM C 494
Corrosion Inhibitors	ASTM C 1582
Reinforcing Bars	ASTM A 615 or ASTM A 706
Plain, Welded Wire Reinforcement	ASTM A 185
Deformed, Welded Wire Reinforcement	ASTM A 497
Epoxy Coated Reinforcing Bars	ASTM A 775
Epoxy Coated Welded Wire Reinforcement	ASTM A 884
Hot-Dipped Galvanizing for Inserts	ASTM A 152
Rubber Gaskets for Circular Pipe	ASTM C 443
External Sealing Bands for Pipe	ASTM C 877
Preformed Flexible Joint Sealants for Concrete Pipe, Manholes, and Manufactured Box Sections	ASTM C 990

Elastomeric Joint Sealants	ASTM C 920
Pipe Entry Connectors	ASTM C 923, ASTM C 1478
Nonshrink Grout	ASTM C 1107

2.4 MANUFACTURE

Manufacture shall conform to the producer's acceptable quality control manual

A. Forms
   1. Forms for manufacturing precast concrete units shall be of the type and design consistent with industry standards and practices. They should be capable of consistently providing uniform products and dimensions. Forms shall be constructed so that the forces and vibrations to which the forms will be subjected cause no damage to the precast concrete unit.
   2. Forms shall be cleaned of concrete build-up after each use.
   3. Form release agents shall be applied according to the manufacturer's recommendations and shall not be allowed to build up on the form casting surface.

B. Reinforcement
   1. Cages of reinforcement shall be fabricated by tying the bars, wires or welded wire reinforcement. The tolerances for concrete cover shall be 3/8 in. or as specified in the design. Welding shall be allowed only for ASTM A 706 rebar.
   2. Positive measures shall be taken to ensure that the reinforcement does not move significantly during the casting operations

C. Embedded Items
   1. Embedded items shall be positioned at locations specified in the design documents. Inserts and other embeds shall be held rigidly in place so that they do not move significantly during casting operations.

D. Concrete
   1. Concrete Mixing
      a. Mixing operations shall produce batch-to-batch uniformity of strength, consistency and appearance
      b. Batching weight and volume measurement devices shall be annually calibrated by an independent testing laboratory or more frequently if batching irregularities or concrete inconsistencies are observed
   2. Concrete placing
      a. Concrete shall be placed in a manner in which it flows and consolidates without segregation or air entrapment. The freefall of concrete shall be kept to a minimum.
      b. Cold Weather Concreting
         i. Recommendations for cold weather concreting are given in detail in ACI 306 R. Adequate equipment shall be provided for heating concrete materials and protecting concrete during freezing or near-freezing temperatures. All concrete materials, reinforcement, and forms shall be free from frost. In cold weather, the temperature of the concrete at the time of placement shall not be below 45 degrees F. Concrete that freezes before it reaches a compressive strength

of 500 psi shall be discarded.

c. Hot Weather Concreting
   i. Recommendations for hot weather concreting are given in detail in ACI 305 R. During hot weather excessive concrete temperatures and water evaporation shall be minimized. The temperature of concrete at the time of placing shall not exceed 95 degrees F.

3. Concrete Curing
   a. Curing operations shall commence immediately following the initial set of the concrete and completion of surface finishing.
   b. Curing by moisture retention
      i. Precast products shall be protected from drafts and wind to prevent plastic shrinkage cracking.
      ii. Moisture shall be prevented from excessively evaporating from exposed surfaces until adequate strength for stripping the precast concrete unit from the form is reached.
   c. Curing with Heat and Moisture
      i. Concrete shall not be subjected to steam or hot air until after the concrete has attained its initial set. If hot air is used, precautions shall be taken to prevent moisture loss from the concrete. The temperature of the concrete shall not be permitted to exceed 150 degrees F. The temperature gain shall not exceed 40 degrees F per hour.
4. Surface Finish
   a. The surface finish shall be as specified on the contract documents and/or approved shop drawings.
5. Stripping Precast Concrete Units from Forms
   a. Precast concrete units shall not be removed from the forms until the concrete reaches the compressive strength for stripping required by design. Stripping strengths shall be routinely measured to ensure product has attained sufficient strength for safe handling.
6. Patching and Repair
   a. Repairing Minor Defects
      i. Defects that will not impair the functional use or expected life of the precast concrete unit may be repaired by any method that does not impair the product
   b. Repairing Honeycombed Areas
      i. When honeycombed areas are to be repaired, all loose material shall be removed and the areas cut back into essentially horizontal or vertical planes to a depth at which coarse aggregate particles break under chipping rather than being dislodged. Proprietary repair materials shall be used in accordance with the manufacturer's instructions. Otherwise, the area shall be saturated with water. Immediately prior to repair, the area should be damp, but free of excess water. A cement-sand grout or an approved bonding agent shall be applied to the chipped surfaces, followed immediately by consolidating an appropriate repair material into the cavity.
   c. Repairing Major Defects
      i. Defects in precast concrete products which impair the functional

use or the expected life of products shall be evaluated by qualified personnel to determine if repairs are feasible and, if so, to establish the repair procedure.

7. Shipping Precast Concrete Units
   a. Precast concrete units shall not be shipped until they have reached at least 70% of their specified 28-day design strength, unless damage will not result, impairing the performance of the product.

2.5 PACKAGE PUMP SYSTEM

A. See plans for pump system details.

2.6 PACKAGE CONTROL SYSTEM

A. Controls to be coordinated with wastewater treatment plant controls.

B. Controls for the actuated slide gates at the hospital lift station shall be incorporated into the hospital lift station control panel.

C. Control system to be submersible transducer type with float backup
   1. General Electrical
      a. All electrical components shall meet NEMA standards and shall comply with NEC and UL as applicable to construction and installation of wiring and components
      b. The manufacturer of the system shall take responsibility for the proper operation / sequencing of the total pump control system.
      c. The manufacturer of the system shall take single source, unit responsibility for every component contained within the manufacturer's pump control system.
      d. The system shall be as manufactured by Dynamic Motor Controls, Saint Augustine, Florida, represented by James Cooke & Hobson or pre-approved equal.
   2. Design Data
      a. The lift station shall be equipped with all internal wiring, starters, panel, control transformer, etc. and configured for a single point electrical connection.
      b. The electrical circuit will terminate on the line side of the circuit at the lift station disconnect switch. Load side of the connection will be provided by the Electrical Contractor to a single point of connection at the lift station.
      c. The pumping system shall be capable of operating in simplex or duplex mode.
      d. The system controller shall supervise all sequencing, pump combinations, non-critical annunciation, system monitoring and back-up systems, and overall system status and control.
      e. Hospital Lift Station
         i. The pump control system shall be capable of operating 2, 72 HP, 78 full load amp (FLA), pumps in a constant speed mode in order to convey sewage without causing a sewage over-flow, regardless of system demands.
            a) Per plan, pumps shall be Flyght Xylem NP3202 SH 3~ 274 or approved equal
         ii. The available input power for the lift station is as follows:

a) 460 VAC, 3 phase, no neutral conductor unless told otherwise
b) 150a/3p circuit breaker
c) Load will be 96 amps, per NEC T430.250.

f. Hon-Dah Lift Station
i. The pump control system shall be capable of operating 2, 5 HP, 8.8 full load amp (FLA), pumps in a constant speed mode in order to convey sewage without causing a sewage over-flow, regardless of system demands.
a) Per plan, pumps shall be Flyght Xylem NP3102 SH 3~ Adaptive 455 or approved equal
ii. The available input power for the lift station is as follows:
a) 460 VAC, 3 phase, no neutral conductor unless told otherwise
b) 150a/3p circuit breaker
c) Load will be 40 amps, per NEC T430.250

3. Sequence of Operation
a. The system shall be designed to produce an outflow from the wet well, in an efficient manner, to prevent the wet well from overflowing.
b. At lower wet well levels, the lead pump operates alone to draw the well down to the stop point. If the wet well level continues to rise and reaches the lag pump start level the lag pump will start and work with the lead pump in gaining control of the wet well. If the wet well continues to rise, a high-level alarm will be activated.
c. If the wet well level continues to rise after the high-level alarm is triggered, at the appropriate level it will trigger the high-high-level float which will activate the float switch override. This will occur at the same level that the hospital lift station reaches the emergency over flow pipe that flows to the community sewer system and at 0.5’ above the high-level alarm in the Hon-Dah lift station.
d. On decreasing wet well level, the pump sequence will reverse, and the pumps will shut off in reverse starting order. As the wet well level decreases and the stop lag pump level is reached the lag pump will be stopped. The lead pump will continue to run until the level decreases sufficiently to reach the stop lead pump level. Once the lead stop pump level has been reached the lead pump will be stopped. Or the system may be programmed for both pumps to run until the stop level is reached.

4. Backup Systems and Redundancy
a. Float Backup System
i. Failure of the pump controller or the pump controller transducer will cause the wet well level to rise to the Standby-Float-System on level. All system or component failures which can cause the wet-well to rise to an undesirable height shall activate this system when the wet-well rises to the "Standby-Float-System On level. The standby float system will lock out all other controls and start the pumps as required based on four (4) float switches (1) set for high level start pumps, (1) set for start lag pump (1) set for start lead pump and (1) for stop pumps.
a) All available pumps shall be sequenced on, with the use of adjustable hard wired time delay to keep the wet-well under

control.

b) The pumps will turn off only when the wet-well level reaches the "stop" float level.

D. Products:

1. Enclosures
   a. The enclosure shall be NEMA type 3R which is designed to house electrical and electronic equipment. The enclosure shall be of the type for use outdoors to protect the enclosed equipment against falling rain and the formation of ice on the enclosure.
   b. The material used for construction shall be stainless steel, with a minimum thickness of 14 gauge. Body stiffeners shall be welded into the enclosure to further ensure a rigid construction.
   c. Pilot and indicator devices shall be mounted on the inner swing panel of the enclosure.
   d. Enclosure shall be as manufactured by Schaefer Electrical Enclosures or approved equal.
2. Circuit Breakers
   a. Circuit breakers shall have a quick make and break operator mechanism.
   b. The handle position shall indicate on, off, or tripped.
   c. All motor three phase short circuit protection shall have a minimum rating of 14KAIC .
   d. Breakers shall be as manufactured by EATON.
3. Motor Control (Starters, Contactors)
   a. Motor control components shall meet the following criteria:
      i. A compact, solid-state, 3-phase soft starter with built-in overload protection and an integral bypass for efficient motor control shall be supplied.
      ii. Unit shall be the SM-3 as manufactured by Allen Bradley or approved equal.
4. Relays
   a. Relays shall be of the plug-in design and have a transparent, polycarbonate dust cover to protect the contact surfaces from airborne dust and other contaminants. All relays shall have 2PDTor 4PDT contacts and a molded nylon coil rated for continuous duty operation on 24 and 120VAC. Relay sockets shall be of the (.187) eleven (11) blade design and have screw terminals. Terminal identification numbers shall be visible on the sockets
5. Time-Delay Relays
   a. Time delay relay shall be of the narrow compact design and shall have 10 field-selectable timing functions in one unit. Shall have Pilot Duty Rating and LEDs indicate output relay status & timing mode
6. Control Circuit Transformer
   a. Nominal control voltage not to exceed 120V.
   b. Control power transformers (CPT) shall be mounted inside the enclosure.
   c. Overcurrent protection shall be supplied on both the line and load sides. Line protection for all step-down transformers shall be provided.
   d. Transformers to be sized for a minimum of 25% extra capacity under full load conditions. Minimum size shall be 750VA.

e. One secondary line shall be grounded for operator safety.
f. Transformers shall be manufactured by Eaton.

7. Surge Protection
   a. Line-to-line and line-to-ground protection shall be provided. This protection shall exceed the requirements of ANSI / IEEE standard C62.1-1984 section 8.6.1. and 8.7.3 by a factor of at least 300%.
   b. Voltage clamping time shall be less than 5 nanoseconds with a maximum surge current of 40,000A RMS at a clamping voltage 552VAC.
   c. Clamping voltage levels shall be specifically sized for the applied system voltage as well as the winding and grounding configuration of the supply transformer. These voltage levels will be chosen to assure minimizing system voltage excursion.
   d. One surge arrestor shall be supplied at the incoming service to the control panel.
8. Pump Controller
   a. The pump controller shall be capable of starting/stopping and alternating up to three (3) pumps with high and low level alarms. The control shall have a field selectable: 0-20, 4-20 mA, ±10 VDC (0-5, 1-5, 0-10 V input. The controller shall have a 4-20 mA output signal. The 4 to 20 mA output signal shall be programmable from the front of the panel. The front panel of the digital controller shall provide a convenient operator interface for observation of status and programming. It shall have a dual-line 6-digit display (999,999), advanced signal input conditioning, function keys, Modbus RTU serial communications, and shall be capable of accepting optional expansion modules. The upper display can be programmed to indicate PV, maximum (peak), minimum (valley), alternating maximum/minimum, one of eight alarm set points, or Modbus input. The lower display can also be configured to display engineering units, set points, user defined legends, or simply turned off. Preloaded programming software that connects and installs directly to your PC with a standard USB cable, also provided free with each instrument.
9. Primary Level Sensor
   a. The Submersible Pressure Transducer shall be specifically designed to meet rigorous environments encountered in level measurement applications. It shall provide repeatable, precision depth measurements under the most adverse conditions.
   b. This transducer shall incorporate an isolated diaphragm sensor which is specifically designed for use with hostile fluids and gasses. The sensor will utilize a silicon pressure cell that has been fitted into a stainless steel housing with an integral, compliant stainless steel barrier diaphragm. The sensor assembly shall be housed in a rugged 316 SS case that provides for a variety of pressure inputs as well as electrical output connections.
   c. It shall have a static accuracy of +/- 2% FSO BFSL:
   d. The Pressure Transducer will be certified intrinsically safe for hazardous locations.
   e. Construction shall be Welded 316 SS construction.
10. Alarm Beacon
   a. The system shall be equipped with an alarm beacon that is activated when pump failure is recognized by the system.

11. Switches and Pilot Lamps
    a. Switches and pilot lamps shall be 22mm N4X. Each pump shall have a separate selector switch with the following settings: HAND-OFF-AUTO (HOA). Each pump shall also have a green pilot lamp connected to auxiliary contacts on the starter to indicate when the pump is running. These switches and lights shall be located inside the control panel on the inner door.
    b. All switches and pilot lamps shall be Allen-Bradley or approved equal.
12. Panel Construction
    a. Back panel components shall be identified by laser-printed polycarbonate labels backed with “3M 200MP,” which are impervious to wear. Conductors shall be marked by MG-TDMO “Four Finger Clip On” laser-printed markers that are also impervious to wear.
        1. All electrical equipment shall be identified in accordance with these specifications.
        2. All identification labels, both within the enclosure and external, shall be laser-screened laminated mylar.
        3. All control wiring shall be numbered on each termination.
    b. No components shall be wired in such a way that jumping or “daisy chaining” is used. No component shall have more than one conductor per terminal. All circuits with more than one conductor run shall be terminated at terminals. Inner door components shall be landed at terminals and wired in such a way that the door can be removed and reinstalled without panel schematics.
    c. Panel shall be UL508A or UL698A listed as required.

2.7 SYSTEM WARRANTY

A. The manufacturer of the lift station shall guarantee for one (1) year from the date of installation, or 15-months from the date of factory completion (whichever occurs first), that the structure and all equipment associated with the package will be free from defects in design, material and workmanship.

B. Warranties and guarantees by the suppliers of various components in lieu of a single source responsibility by the manufacturer will not be accepted. The manufacturer shall be solely responsible for the warranty of the station and all components.

C. In the event a component fails to perform as specified or is proved defective in service during the warranty period, the manufacturer shall provide a replacement part without cost to the Owner. The Contractor shall further provide, without cost to the Owner such labor as may be required to replace, repair or modify major components such as the station structure, pumps, pump motors sewage piping manifold, etc.

D. As a minimum, all components in the specified control system shall carry a comprehensive, parts only, twelve (12) month guarantee against defects in workmanship and material from the date of final inspection and acceptance, not to exceed 18 months from the date of shipment from the manufacturer's facility.

PART 3 EXECUTION

3.1 SURVEY

A. The installation area shall be surveyed using the work print and a checklist to identify the work to be done and to determine that the plans are correct

B. All underground facilities and structures such as gas, water, sewer, power, telephone cable, and so forth shall be located and identified. Location markings shall be placed by the affected utilities before construction

C. The survey shall identify any obstacles such as overhead wires, building structures that will interfere with crane operations, work progress, or create a safety hazard.

D. The survey shall give consideration to the soil structure so that proper shoring, sloping, or both may be planned in advance of the excavation work

3.2 PLANNING

A. Permits required to do work in accordance with the detailed plans shall be secured before starting the job. All permits or a record of the permits shall be retained on the job for immediate reference

B. All utilities and owners of surface and subsurface facilities and structures in the area shall be given advance notification of proposed excavation. Every effort shall be made to avoid damage to the facilities of others. If any damage occurs, the owner of the damaged facility shall be notified immediately.

C. Planning shall include the coordination of all responsible parties to ensure that arrangements for removal of excess and damaged material have been made.

D. Should it appear that a structure location will interfere with traffic, review the situation with the engineer and notify appropriate authorities.

E. Provide for access to call boxes, fire hydrants, etc.

3.3 SAFETY REQUIREMENTS

A. Safety requirements for construction shall be in accordance with all federal, state, and local regulations.

3.4 EXCAVATING

A. If unforeseen facilities or obstructions are encountered, stop excavation operations immediately. Expose the obstruction with wood handled digging tools and investigate them with caution. If there is any doubt as to the type of obstruction exposed, request positive identification from those suspected of owning the facility and then proceed as circumstances dictate.

B. Inspect excavations after every rainstorm or other hazard-increasing occurrence, and increase the protection against slides and cave-ins, if necessary

C. In dewatering excavations, make certain that the discharge is carried to a suitable runoff point. Also verify that the design accounts for the level of groundwater encountered.

D. Excavation size shall be large enough to allow access around the structure after it is installed.

E. All excavating shall be under the full guidelines for on-site OSHA regulations and shall

be under the supervision of an OSHA-certified safety coordinator.

3.5 SHORING

A. Shoring for construction shall be in accordance with all federal, state, and local regulations

3.6 INSTALLATION

A. General

Installation of the pump chamber sections, and related equipment shall be done in accordance with written instructions supplied by the manufacturer. Installation oversight service (1-day) can be provided by the pump station manufacture (as may be required by the owner), when specifically stated as necessary site service. Additional days for factory technicians shall be paid for at the standard daily rate.

B. Assembly

1. The pump station shall be factory assembled and shipped to the job site as follows:
   a. Wet well precast base assembly with interior fillet and extended base. Pump base elbow & slide couplings will be factory mounted.
   b. Precast concrete riser shims as required, shall include holes and factory installed rubber boots as required.
   c. Integral valve pit assembly shall include factory installed: piping, valves, supports, gauges, bypass, ladder, hatch drain to pump station – as required. Valve pit assembly may incorporate riser sections of 2’ & 4’ as may be required.
   d. Precast pump station top slab shall include HS20 aluminum access covers and will be factory sealed to the lower valve vault or valve vault riser.
   e. Miscellaneous items provided and field installed shall include: pumps, control panel, level control devices, vertical discharge piping, dresser couplings, pump guide rails, and any other equipment that may cross a structural joint, having to be removed for transport.

C. Site Access

The general contractor shall be responsible for providing adequate access to the site to facilitate hauling, storage, and proper handling of the precast concrete units.

D. Subgrade Bedding Materials and compaction

The installation contractor shall be responsible for ensuring that the subgrade is compacted to 95% of ASTM D558 density. The subgrade shall be a minimum of 6” in depth. A granular material shall be used to create a level surface for placing the precast concrete unit.

E. Installation

Precast concrete units shall be installed: to the lines and grades shown on the contract documents or otherwise specified; be lifted by suitable lifting devices at points provided by the precast concrete producer; in accordance with applicable industry standards. Upon request, the precast concrete producer shall provide installation instructions and oversight. Field modifications to the product shall relieve the precast producer of liability and warranty regardless if such modifications result in the failure of the precast concrete unit.

F. Leak Resistance

Where leak resistance is a necessary performance characteristic of the precast concrete unit’s end use, joint sealant, pipe-entry connectors and other penetrations shall be sealed

according to manufacturers requirements to ensure the integrity of the system. Structural leak testing at the joints can only be completed with an exfiltration test after complete backfilling.

3.7 BACKFILLING AND RESTORATION

A. Do the backfilling as soon as possible after the structure has been placed.

B. Backfill material shall be granular and free from large stones, rocks, and pavement. Expansive soil material shall not be used as backfill around the structure.

C. Backfilling shall be achieved by lifts (layers) to the required compaction.

D. Follow up inspections for settlements are required. Should settlement occur, the contractor shall be responsible for all necessary repairs.

3.8 FIELD QUALITY CONTROL

A. Inspection
   1. Final field elevations and compaction properties shall be verified and documented.

B. Leakage Testing
   1. Structure shall be backfilled as stated above to testing level, unless specifically authorized by Oldcastle's design engineers.
   2. Watertightness test: The structure shall be tested for water tightness to a minimum of the high-water alarm elevation. Fill tank to the desired level and let stand for 24-hours for absorption, top off liquid to required level and let stand for a 24-hour period. Watertightness shall be defined as loss of liquid level less than .05% in 24-hours.

C. Start-Up
   1. After installation, a lift station start-up shall be performed by the installing contractor under the supervision of the manufacturer's authorized representative. One day of field service shall be provided by an authorized, factory trained representative of the lift station manufacturer. Services shall include, but not be limited to, inspection of the completed lift station installation to ensure that it has been performed in accordance with the manufacturer's instructions and recommendations, supervision of all field-testing and activation of the left station manufacturers' warranty. The test shall demonstrate to the satisfaction of the owner that the equipment meets all of the specified performance criteria, is properly installed and anchored, and operates smoothly. The contractor shall be responsible for coordinating the required field services for the testing with the lift station manufacturer.

3.9 SPARE PARTS

A. Spare parts shall be provided in accordance with manufacturer's standard package.

3.10 O&M MANUALS

A. One (1) electronic copy of complete project O&M manual shall be furnished for the pump station, or Four (4) hard copies as dictated by the owner. The manual shall be assembled complete with index and instructions that are comprehensive and sufficiently detailed for the intended use. The manuals shall be compiled in a logical and organized manner.

B. The manuals shall include the station As-Built drawing package showing final mechanical layout and updated mechanical BOM.

C. The Manuals shall contain specific pump station instructions which will enable personnel to operate and maintain the pump station and all equipment associated with each individual system installed within the station.

D. Manuals that are a compilation of generalized manufacturer's literature that are not solely applicable to the particular pumping station will not be accepted.

E. The Manuals shall contain, but not be limited to:
   1. Pump service and maintenance instructions, as detailed in the pump specification section
   2. Duplex pump control panel programing and maintenance instruction and wiring diagrams, as detailed in the control panel specification section
   3. All pump station equipment service and maintenance instructions for equipment supplied in the package pump station product.
   4. AS-BUILT fabrication and assembly drawings.
   5. Start-up & training reports
   6. Product warranties
   7. Product contact information and project reference information.

END OF SECTION

SECTION 333723 - STAINLESS STEEL SLIDE GATES

PART 1 - DESCRIPTION

1.1. GENERAL

A. This section covers stainless steel slide gates with 4 sides sealing for submerged applications and their associated accessories for operation. The contractor shall furnish all labor, materials, equipment and incidentals required to install and field test the gates shown on the Contract Drawings and specified herein.

1.2. REFERENCES

A. Definitions
1. Design Head: The maximum differential head that will be applied on the gate under worst case conditions, measured from the gate invert.
2. Seating Head: Head applied on a wall mounted gate, in the direction that pushes the gate against the wall it is installed on.
3. Unseating Head: Head applied on a wall mounted gate in the direction pulling the gate away from the wall it is installed on.
4. Operating Head: The highest differential head that is to be applied on the gate when it needs to be operated, measured from the gate invert.

B. Reference Standards
1. ANSI/AWWA C561 – Fabricated Stainless Steel Slide Gates.
2. ANSI/AWWA C542 – Electric Motor Actuators for Valves and Slide Gates.
3. ASTM A240/A240M – Standard Specification for Chromium and Chromium Nickel Stainless Steel Plate, Sheet and Strip for Pressure Vessels and for General Applications.
4. ASTM A276 – Standard Specification for Stainless Steel Bars and Shapes.
5. ASTM A-380 Cleaning, descaling, and passivation of Stainless Steel.
6. ASTM A582/A582M - Standard Specification for Free-Machining Stainless Steel Bars.
7. ASTM A790/790M - Standard Specification for Seamless and Welded Ferritic / Austenitic Stainless Steel Pipe.
8. ASTM B179 - Standard Specification for Aluminum Alloys in Ingot and Molten Forms for Castings from All Casting Processes.
9. ASTM B584 - Standard Specification for Copper Alloy Sand Castings for General Applications.
10. ASTM D2000 - Standard Classification System for Rubber Products in Automotive Applications.
11. ASTM D4020 - Standard Specification for Ultra-High-Molecular-Weight Polyethylene Molding and Extrusion Materials.
12. ASTM F593 - Standard Specification for Stainless Steel Bolts, Hex Cap Screws, and Studs.

1.3. SUBMITTALS

A. Drawings
1. The slide gates manufacturer shall submit, for acceptance by the purchaser, general arrangement drawings of the equipment supplied under this section. Drawings must indicate all dimensions that will allow the contractor to ensure coordination with dimensions of the installation environment. Drawings will also show sufficient details to determine compliance with the requirements, including the stainless steel plate thickness used for all components. Drawings shall also include certification that the slide gates supplied meet all requirements of AWWA C561-12.

B. Design Calculations
   1. The gate manufacturer shall submit, for acceptance by the purchaser, design calculations demonstrating compliance with the design requirements of these specifications and those of AWWA C561-12. In particular, calculations shall be submitted for the following gate components:
      a. Slide
      b. Seat contact pressure
      c. Frame
      d. Yoke
      e. Stem, stem connection
      f. Lifting nut
      g. Manual actuator operating force
      h. Electric actuator load
      i. Anchors

C. Test Reports
   1. The gate manufacturer shall submit upon request, for information, the leakage and operation test reports specific to the actual gates that are being supplied demonstrating their compliance with the maximum leakage rate and maximum operating force allowed.

D. Installation, Operation and Maintenance Manual
   1. The gate manufacturer shall provide a manual containing the instructions for installation, operation and maintenance of the slide gates. The manual shall also contain the detailed information on the terms of the 5 year warranty on the products.

1.4. QUALITY ASSURANCE

A. Qualifications
   1. The gates supplied under this section shall be standard products of a manufacturer regularly engaged in the design and manufacturing of water control gates. The specifications are based on AQUANOX series S Slide Gates manufactured by ISE Metal Inc.

B. Standards and Certifications
   1. The gates supplied under this section shall conform to all requirements of ANSI/AWWA C561-12. The slide gate manufacturer must maintain an ISO-9001 certification and also a company certification for its welding operations from the CWB or AWS.

1.5. DELIVERY

A. The manufacturer shall use due and customary care in preparing the gates and accessories for shipment. Self contained frame gates shall be shipped assembled with stem and manual operator/actuator. When shipping several gates together, every item shipped separately must be clearly marked to the gate it belongs to.

1.6. WARRANTY

A. The slide gates and manual operating accessories shall be covered by a five (5) year warranty from the manufacturer against defects in materials, design and workmanship. The warranty period will start from the date of delivery of the equipment to the installation site.

1.7. SINGLE SOURCE RESPONSIBILITY

A. To ensure that all equipment required for the installation of the slide gate and actuator is properly coordinated and will function as a unit in accordance with the intent of these specifications, the Contractor shall obtain all the equipment specified under this section, from a

single supplier with whom the responsibility for the proper function of all equipment, regardless of manufacturer, as an integrated and coordinated system shall be vested. This requirement is to establish unit responsibility for all the equipment with the equipment supplier. The use of the word responsibility relating to the equipment supplier is in no way intended to relieve the Contractor's ultimate responsibility for equipment coordination, installation, operation, and guarantee.

PART 2 PRODUCTS

2.1. EQUIPMENT

A. Manufacturers
   1. Gates supplied shall be AQUANOX Series S Slide Gates, as manufactured by ISE Metal Inc. or approved equal.

B. Description
   1. The gates shall be upwards opening of the 4 sides sealing type designed for submergence in water or wastewater applications. They shall have flow control capability by allowing only flow through the open area in partial opening situations. As specified in the gate schedule, each gate shall be a self-contained-frame design with a non-rising stem configuration.

C. Performance and Design
   1. Slide
      a. The slide consisting of a flat plate with welded reinforcing ribs shall be designed to withstand the design head specified in the gate schedule with a maximum deflection of 1/720 of the gate opening width or 1/16 in (1.6mm) whichever is less and with stresses in the slide limited to 25% of the ultimate tensile, compressive, and shear strength and 50% of the yield strength, whichever is less. Minimum material thickness of all members of the slide shall be ¼ in (6mm).
   2. Frame
      a. The gate frame shall be made of formed plates or structural members creating the clear opening of the specified dimensions in a rigid one-piece unit. The mounting and bolting flange of the frame to the wall shall be separate and independent from the seating and sealing plane of the slide. The bottom of the frame will be of the flush invert type. Stresses in the frame under design head shall not exceed 25% of the ultimate tensile, compressive, and shear strength and 50% of the yield strength, whichever is less. Minimum material thickness of all members of the frame shall be ¼ in (6mm).
   3. Yoke
      a. Gates specified as self-contained design shall include a yoke consisting of a beam made of formed plates or structural members mounted on top of the frame to permit mounting of the actuator with proper stem alignment by the use of slotted holes in both directions. The yoke shall be sized to limit deflection under the design load to a maximum of 1/360 of the gate opening width or ¼ in (6mm) whichever is less. The yoke design load must be considered as the vertical thrust generated by an 80 lbs. (356 N) force on the crank or handwheel (for a manual actuator) or by the actuator in locked rotor condition (for an electric actuator). Per AWWA C561-12, the stresses in the yoke generated by the design load shall not exceed (for a manual actuator) 25% of the ultimate tensile, compressive, and shear strength and 50% of the yield strength, whichever is less, or (for an electric actuator) 2/3 of the yield strength.

4. Guiding and Seating
   a. The slide shall seat and travel on guides made of ultra-high molecular weight polyethylene (UHMWPE) designed to perform for the life of the slide gate without replacement. The slide shall be kept in positive contact with the guides on both its upstream and downstream faces, all along its travel in the gate clear opening by an elastomeric cord. Above the gate clear opening, the guides shall extend high enough to ensure that the slide is supported by a minimum of 2/3 of its height when fully opened. The low friction guides shall be secured to the frame by bolted retainers allowing factory adjustment of the contact pressure with the slide. The surface of contact on the side seats shall be large enough to limit the stress under the design head to 600 psi (4137 KPa) without considering the top and bottom seats as load bearing.
5. Sealing
   a. The guides combined with the elastomeric cord will provide sealing on both sides of the opening. Sealing at the top section of the gate will also be achieved with a UHMWPE seat maintained in contact by an elastomeric cord. At the gate invert, the slide shall close on a flush inverted rubber seat/seal secured in the bottom member of the gate frame. Under the design seating or unseating head specified in the gate schedule, the slide gates shall restrict leakage to a maximum of 0.04 gpm/ft (0.5 l/min/m) of clear opening perimeter. Manufacturer shall be able to demonstrate that the sealing system will retain its performance even after 25,000 operating cycles.
6. Stem Connection
   a. For gates with non-rising stems, the connection to the slide shall be by means of a threaded thrust nut matching the stem threads. Stem connection design shall limit the stress under the design load to a maximum of 25% of the ultimate tensile, compressive, and shear strength and 50% of the yield strength. The stem connection design load shall be the thrust and torque developed when an 80lbs (356N) effort is applied to the crank or handwheel (for a manual actuator), or 1.5 times the thrust and torque developed with the actuator installed condition (for electric motors).
7. Stem
   a. The stem configuration shall be non-rising according to the type specified on the drawings. The threads shall be machine rolled ACME left hand threads with double entry to minimize the number of turns required for operation and provide gate opening by counterclockwise rotation of the manual actuator. Surface finish of the machined threads will be 32 micro inch (0.813 µm) or better.
   b. The stem shall be sized so that its critical buckling load (as determined by the Euler column formula) is higher than the design compression load, defined as the vertical force developed by a 80lbs (356N) effort applied on the crank or handwheel (for a manual actuator), or 1.5 times the thrust and torque developed with the actuator installed condition (for electric motors).
8. Couplings
   a. The required stem extensions shall be joined together or to the threaded stem by means of a bolted connection, passing through both pipe and stem.
9. Stem guides
   a. Guides will be provided as required to meet the stem buckling design criteria and positioned per the manufacturer’s recommendations to ensure that the length to radius of gyration ratio (l/r) does not exceed 200. The guides shall incorporate a UHMWPE bushing supported by a stainless steel wall bracket adjustable in both horizontal directions.

D. Manual Actuators
1. Operation
Manual actuator of the proper type and mounting location, as listed in the gate schedule or shown on the drawings, shall be provided by the gate manufacturer. The effort required on the manual device to operate the gates shall not exceed 40 lbs. (178 N), while to start the gate in motion from the fully closed position with the design pressure, the required effort shall not exceed 60 lbs. (267 N). Indication of the opening direction of rotation shall be clearly marked in a permanent manner on the handwheel or crank.
2. Handwheels – For the gates at the Hon-Dah site
The handwheel shall be removable and have a minimum diameter of 16” (406mm). It shall drive the lift nut directly or via the extension pipe of self-contained gates or it shall engage the input shaft of the gearbox, when specified.
3. Actuator Lift Nut and Thrust Bearings
All gates shall include a thrust bearing assembly comprising a threaded bronze lift nut to engage the operating stem. This assembly must be enclosed in a machined stainless steel housing or be an integral part of the gearbox when supplied. Needle roller thrust bearings shall be provided above and below the lift nut to support the operating efforts in closing and opening the gate. The length of thread engagement shall be sufficient to ensure that the maximum pressure on the projected area of thread contact does not exceed 2000 psi (13,8 MPa) at normal maximum operating load and that the PV (pressure velocity) factor does not exceed 30,000. The PV factor is calculated by multiplying the pressure on the projected area of thread contact in psi by the surface velocity in ft/min at the pitch diameter of the threads. For non-rising stem gates, the actuator lift nut shall be keyed to prevent rotation relative to the threaded stem.
4. Mounting
The thrust bearing assembly or the gearbox shall be mounted on the yoke of the gate for all gates specified as self-contained. Pedestal height shall be such that the handwheel or input shaft of the gearbox is located approximately 36” (900mm) above the operating floor. Where shown on the drawings or when specified, a wall bracket shall be supplied to support the pedestal. The pedestal wall bracket shall be designed and supplied by the gate manufacturer to ensure that it can resist all operating efforts of the gate based on the same design calculation criteria used for the yoke.

E. Motorized Actuators
1. When required by the drawings, motorized actuators shall be supplied as specified in specification section 400557, Power Operated Valve and Gate Assemblies.

F. Anchor Bolts
1. The quantity, size and location of anchor bolts shall be determined by the gate manufacturer and shown on the submittal drawings. The minimum required load capacity of the anchors used for design must also be indicated on the drawings.

G. Materials

Slide, Frame and Yoke	Stainless Steel	ASTM A240, grade 316L
Side Seal/Guides and Top Seal	Ultra-High Molecular Weight Polyethylene (UHMWPE)	ASTM D4020
Flush Invert Bottom Seal	Ethylene Propylene (EPDM)	ASTM D2000
Compression Cord	Ethylene Propylene (EPDM)	ASTM D2000
Wall Gasket	Ethylene Propylene (EPDM)	ASTM D2000
Bolts and Hardware	Stainless Steel	ASTM F593, grade 316
Stem	Stainless Steel	ASTM A582, grade 316
Thrust Nut and Lift Nut	Aluminum Bronze or	ASTM B505, C95800

	Manganese Bronze	ASTM B584, C86300
Stem Couplings	Stainless Steel	ASTM A582, grade 316L
Stem Guide Bracket	Stainless Steel	ASTM A582, grade 316
Stem Guide Bushing	Ultra-High Molecular Weight Polyethylene (UHMWPE)	ASTM D4020
Handwheel	Cast Aluminum	ASTM B179
Crank	Aluminum	ASTM B209, 6061-T6
Pedestal	Stainless Steel	ASTM F593, grade 316
Gearbox Housing	Cast Iron	ASTM A48 35B/40B
Square Nut	Cast Aluminum	ASTM B179
Stem Cover	Clear PVC	
Stem Cover Cap	PVC	

2.2. CLEANING

A. Before assembly, slide, frame, yoke, pedestal and all others welded parts shall be completely cleaned by abrasive blast using single-use glass bead or crushed glass, never recycled. All the surfaces of all parts shall be cleaned, in order to remove all contaminants and allow the stainless steel surface to passivate by spontaneously forming a chemically resistant surface when exposed to air. Cleaning only the welds by paste or other chemical means is not an acceptable method to remove all contaminants from the fabrication process and achieve the required level of passivation per ASTM A-380.

2.3. FACTORY TESTS

A. The gates shall be tested in the factory for leakage and for operating force. Leakage shall be measured at the unseating design pressure. Operating force shall be measured with the gate in vertical position, with and without the design pressure. Factory test reports shall be available on request for all gates supplied.

PART 3 EXECUTION

3.1. INSTALLATION

A. It is the responsibility of the Contractor to handle, store and install the gates in strict accordance with the manufacturer's instructions and recommendations. The Contractor shall review the installation drawings and instructions before proceeding to the installation of the gates.

B. The gate assemblies must be installed on a true vertical plane, square and plumb. The operating stem shall be accurately aligned with the gate guides and properly greased.

3.2. FIELD TESTING

A. After installation, the gates must be field tested by the Contractor, in the presence of the Engineer and Owner, to ensure compliance with the requirements of these specifications. Each gate shall be operated on its complete open-close cycle to confirm operation without binding, scraping or distorting. Operating effort on the crank, handwheel or T-wrench shall be observed or measured. In the case of motorized actuators, the operating torque shall be noted, and the initial set-up of each actuator shall be done in accordance with the instructions in the manual.

B. Each gate shall be water tested by the Contractor and sealing performance shall be observed.

C. The Contractor shall supply a detailed report of the field tests to the Engineer for review.

END OF SECTION

SECTION 334213 - STORMWATER CULVERTS AND DRAINAGE FACILITIES

PART 1 - GENERAL

1.1 SUMMARY

A. Stormwater culverts shall conform to the requirements of the Maricopa Association of Governments Uniform Standard Specifications for Public Works Construction, 2025 Revision to the 2020 Edition:
   1. Storm Drain Construction, Section 618.
   2. Related sections of Part 600 – Water, Sewer, Storm Drain and Irrigation
   3. Related sections of Part 700 – Materials

B. Onsite HDPE storm drain shall conform to the requirements of Section 28 of the White Mountain Apache Tribe IDIQ 2023 Modification of the 2019 PAO/SFC Technical Provisions, which have been included in the Project Documents for reference.

C. Stormwater culverts, installed within the Arizona Department of Transportation State Route 73 right-of-way, shall conform to the requirements of the Arizona Department of Transportation 2021 Standard Specifications for Road and Bridge Construction, Division V

1.2 RELATED SECTIONS

A. Section 312333 – Trenching and Backfill

B. Section 331000 – Water Utilities

C. Section 333000 – Sanitary Sewerage Utilities

D. Construction Drawings

PART 2 - PRODUCTS

2.1 DRAINAGE FACILITIES

A. All drain basins and bubbler boxes shall be ADS Nyoplast or approved equal.

PART 3 - EXECUTION - NOT USED

END OF SECTION

SECTION 340114 - SIGNING AND MARKING

PART 1 - GENERAL

1.1 SUMMARY

A. All equipment, materials, and labor to apply pavement markings and install signage to direct and control traffic within the State Route 73 right-of-way shall conform to the requirements of the Arizona Department of Transportation Standard Specifications for Road and Bridge Construction, 2021 and appropriate stored specifications:

1. Section 105 Control of Work
2. Section 106 Control of Material
3. Section 107 Legal Relations and Responsibility to Public
4. Section 109 Measurement and Payment
5. Section 601 Concrete Structures
6. Section 604 Steel Structures
7. Section 607 Roadside Sign Supports
8. Section 608 Sign Panels
9. Section 701 Maintenance and Protection of Traffic
10. Section 703 Delineators and Markers
11. Section 704 Thermoplastic Pavement Markings
12. Section 705 Preformed Pavement Marking
13. Section 706 Raised Pavement Markers
14. Section 707 Tubular Marker (Flexible)
15. Section 708 Waterborne Pavement Markings
16. Section 709 Dual Component Pavement Markings
17. Section 922 Utility Concrete for Miscellaneous Concrete
18. Section 925 Construction Survey and Layout
19. Section 1006 Portland Cement Concrete
20. Section 1007 Retroreflective Sheeting
21. 703DTRMKR Flexible Delineator Posts
22. 704TPMF Thermoplastic Pavement Markings
23. 705PVMRK Preformed Plastic Pavement Marking
24. 706REFPMR Raised Pavement Markers
25. 708PTVCT Paint Viscosity
26. 709PGMNT Dual Component Pavement Markings

1.2 RELATED SECTIONS

A. Construction Drawings

PART 2 - PRODUCTS

2.1 TRAFFIC SIGNAL EQUIPMENT

A. Permanent signage and pavement marking materials shall be furnished from the approved makes and models where listed on the Arizona Department of Transportation Approved Products List provided with the following website: https://azdot.gov/planning/research-center/product-evaluation-program. The Contractor shall submit shop drawings to, and receive approval from, the Engineer for proposed equipment prior to placing orders for said equipment.

PART 3 - EXECUTION - NOT USED

END OF SECTION

SECTION 344113 - TRAFFIC SIGNALS

PART 1 - GENERAL

1.1 SUMMARY

A. All equipment, materials, and labor to install a fully functional and operational traffic signal system shall conform to the requirements of the Arizona Department of Transportation Standard Specifications for Road and Bridge Construction, 2021 and appropriate stored specifications:

1. Section 105 Control of Work
2. Section 106 Control of Material
3. Section 107 Legal Relations and Responsibility to Public
4. Section 109 Measurement and Payment
5. Section 203 Earthwork
6. Section 601 Concrete Structures
7. Section 608 Sign Panels
8. Section 730 General Requirements for Traffic Signal and Highway Lighting Systems
9. Section 731 Structural Supports and Foundations for Traffic Signal and Highway Lighting
10. Section 732 Electrical Underground Material
11. Section 733 Signal Indications and Mounting Assemblies
12. Section 734 Traffic Controller Assembly
13. Section 735 Detectors
14. Section 736 Highway Lighting
15. Section 737 Incidental Electrical Work
16. Section 1003 Reinforcing Steel
17. Section 1006 Portland Cement Concrete
18. 731STRSUP Structural Supports for Signal and Highway Lighting
19. 733SBRB Signal Backplate Retroreflective Border
20. 1003REBAR Reinforcing Steel
21. 1006PCC Portland Cement Concrete

1.2 RELATED SECTIONS

A. Section 024100 – Demolition

B. Section 312333 – Trenching and Backfill

C. Construction Drawings

PART 2 - PRODUCTS

2.1 TRAFFIC SIGNAL EQUIPMENT

A. All traffic signal equipment shall be furnished from approved the makes and models listed on the Arizona Department of Transportation Approved Products List provided with the following website: https://azdot.gov/planning/research-center/product-evaluation-program. The Contractor shall submit shop drawings to, and receive approval from, the Engineer for proposed equipment prior to placing orders for said equipment.

PART 3 - EXECUTION - NOT USED

END OF SECTION

SECTION 347100- ADOT CONSTRUCTION REQUIRMENTS & ENCROACHMENT PERMIT

PART 1 - GENERAL

1.1 SUMMARY

A. The contractor is hereby informed that a portion of work is located with the Arizona Department of Transportation (ADOT) right-of-way for State Route 73. The ADOT Standard Specifications for Road and Bridge Construction, 2021 with appropriate stored specifications and ADOT details are hereby adopted as part of these contract documents as it pertains to the State Route 73 off-site roadway, drainage, structural, traffic signals, signing, and pavement marking improvements. All equipment, materials, and labor with the ADOT right-of-way shall be in accordance with the ADOT details and specifications provided with the links below:

Arizona Department of Transportation: Contracts and Specifications Section
1651 West Jackson Street, Maildrop 121F
Phoenix, Arizona 85007
Telephone: (602) 712-7221
Website: https://azdot.gov/business/contracts-and-specifications/specifications-pay-items-list

Arizona Department of Transportation: Roadway Engineering Group
205 South 17th Avenue, Maildrop 611E
Phoenix, Arizona 85007
Telephone: (602) 712-7360
Website: https://azdot.gov/business/engineering-and-construction/roadway-engineering/roadway-design/construction-standard

Arizona Department of Transportation: Traffic Engineering and Construction Section
1615 West Jackson Street, Maildrop 061R
Phoenix, Arizona 85007
Telephone: (602) 712-7766
SLS Website: https://azdot.gov/business/engineering-and-construction/traffic/signals-and-lighting-standard-sls-drawings

SMS Website: https://azdot.gov/business/engineering-and-construction/traffic/signing-and-marking-standard-sms-drawings

B. All work within the ADOT right-of-way shall be performed under the purview of an ADOT Encroachment permit. The Contractor will be responsible for submitting and acquiring an approved Encroachment Permit from ADOT prior to any construction activity within the ADOT right-of-way. The requirements for obtaining the Encroachment Permit can be found at the following website: https://www.azdot.gov/business/Permits/encroachment-permits.

END OF SECTION

SECTION 347113 - VEHICLE BARRIERS

PART 1 - GENERAL

1.1 SUMMARY

A. All equipment, materials, and labor to install a fully functional guardrail barrier system shall conform to the requirements of the Arizona Department of Transportation Standard Specifications for Road and Bridge Construction, 2021 and appropriate stored specifications:

1. Section 105 Control of Work
2. Section 106 Control of Material
3. Section 107 Legal Relations and Responsibility to Public
4. Section 109 Measurement and Payment
5. Section 905 Guardrail
6. Section 1002 Paint
7. Section 1012 Guardrail Materials

1.2 RELATED SECTIONS

A. Construction Drawings

PART 2 - PRODUCTS

2.1 GUARDRAIL EQUIPMENT

A. All guardrail equipment shall be furnished based on the Arizona Department of Transportation Construction Standard Drawings and information provided on the Arizona Department of Transportation Barrier Design Information website provided with the following link: https://azdot.gov/business/engineering-and-construction/roadway-engineering/roadway-design/barrier-design-information. The Contractor shall submit shop drawings to, and receive approval from, the Engineer for proposed equipment prior to placing orders for said equipment.

PART 3 - EXECUTION - NOT USED

END OF SECTION

SECTION 347116 - IMPACT ATTENUATING DEVICES

PART 1 - GENERAL

1.1 SUMMARY

A. All equipment, materials, and labor to install a fully functional impact attenuating device shall conform to the requirements of the Arizona Department of Transportation Standard Specifications for Road and Bridge Construction, 2021 and appropriate stored specifications:

1. Section 105 Control of Work
2. Section 106 Control of Material
3. Section 107 Legal Relations and Responsibility to Public
4. Section 109 Measurement and Payment
5. Section 702 Attenuation Devices
6. Section 905 Guardrail
7. Section 922 Utility Concrete for Miscellaneous Construction
8. Section 1002 Paint
9. Section 1003 Reinforcing Steel
10. Section 1012 Guardrail Materials

1.2 RELATED SECTIONS

A. Construction Drawings

PART 2 - PRODUCTS

2.1 GUARDRAIL EQUIPMENT

A. All impact attenuating equipment shall be furnished from approved the makes and models listed on the Arizona Department of Transportation Approved Products List provided with the following website: https://azdot.gov/planning/research-center/product-evaluation-program. The Contractor shall submit shop drawings to, and receive approval from, the Engineer for proposed equipment prior to placing orders for said equipment.

PART 3 - EXECUTION - NOT USED

END OF SECTION

SECTION 400205 – PIPING SCHEDULE – WWTP

PART 1 - GENERAL

1.1 WORK INCLUDED

A. The work of this section, and of the Detail Piping Specifications hereinafter, applies to the wastewater treatment plants at the IHS Hospital Utility Campus and the IHS Hon-Dah Utility Campus.

B. This section presents and explains a tabulation of the piping to be used for each of the various process piping systems for this project.

PART 2 - PRODUCTS

2.1 GENERAL

A. The piping systems being furnished and installed in this project are tabulated in the Piping Schedule included at the end of this section.

2.2 PIPING SCHEDULE

A. The Piping Schedule lists each service by name and by legend and tabulates the applicable detail piping specification section numbers for each piping material to be used in a given service and location.

B. The detail piping specification section numbers are referenced also as to nominal pipe size and location, exposed or buried, submerged, concrete encased, etc.

C. The test pressure for each piping service is listed in the Piping Schedule.

D. In locations where the referenced specifications for a service are unacceptable due to unique or localized physical limitations, specifications or acceptable alternative materials are listed in the “Notes/Remarks” column of the Piping Schedule. If not listed, the Contractor shall notify the Engineer for verification of an acceptable alternative.

E. Where the use of the material listed in the Piping Schedule is not intended but the quantity of the material does not warrant the inclusion of additional materials of construction in the “Notes/Remarks” column, materials of construction will be shown on the Drawings. The material to be used is shown by the standard abbreviation for the material listed herein. In addition, piping not identified by service is identified by material of construction. The appropriate Specification for that material is also listed.

2.3 ABBREVIATIONS

ELDI - Epoxy Lined Ductile Iron
CONC - Concrete
CPVC - Chlorinated polyvinyl chloride
DI - Ductile Iron
FRP - Fiberglass Reinforced Plastic
GS - Galvanized Steel
HDPE - High density polyethylene
PE - Polyethylene Tubing
PP - Polypropylene
PVC - Polyvinyl Chloride
SST - Stainless Steel
STL – Steel
THPVC – Thickwall PVC (AWWA C900)
WSTL – Welded Steel

< - Less than
≤ - Equal to or less than
> - Greater than
≥ - Equal to or greater than
X=H - Hydrostatic test
X=P - Pneumatic test
NR - Not required

2.4 COLOR CODES AND LABELS

A. Pipe System and Color Code Schedule:
1. The color code scheme proposed below is approximate and must be verified with the Engineer prior to any painting.
2. If a pipe designation is not shown, Contractor shall assume that painting for color coding will be required and direction from the Engineer regarding pipe color and banding should be sought.

B. Piping color codes and labels are specified in table.

Pipe Designation	Pipe Description	Pipe Color	Bands
AL[1]	ALUMINUM SULFATE	Federal Safety Orange	3-Blue
ALP	AIR, LOW PRESSURE	Federal Safety Green	None
D	DRAIN	Black	None
DEC	DECANT	Light Brown	None
DS	DIGESTED SLUDGE	Dark Brown	None
EQB	EQ BASIN BYPASS	Light Gray	1-Black
FA	FOUL AIR	Tan	None
HWE	HEADWORKS EFFLUENT	Light Gray	1-Black
NAOH[1]	SODIUM HYDROXIDE, CAUSTIC	Federal Safety Orange	1-Blue
NAOCL[1]	SODIUM HYPOCHLORITE	Federal Safety Orange	2-Blue
MIC[1]	MICRO-C2000	Federal Safety Orange	None
NPW	NONPOTABLE WATER	Dark Blue	3-Safety Red
PE	PLANT EFFLUENT	Dark Blue	None
POLY	POLYMER	Buff	1-Black
RCLM	RECLAIMED WATER	Reuse Purple	None
S(FM)	SEWER (FORCE MAIN)	Dark Gray	1-Black
V	VENT	Grey	None
WAS	WASTE ACTIVATED SLUDGE	Dark Brown	3-White

Pipe Designation	Pipe Description	Pipe Color	Bands
1. Applies to PVC piping. For exposed PP tubing, only apply bands as noted.			

2.5 RELATED WORK SPECIFIED AND PERFORMED UNDER OTHER SECTIONS

A. Materials and workmanship for piping materials for the following items will be found in Division 40, PROCESS INTERCONNECTIONS-WWTP:
   1. Pressure gauge piping between service tap isolation valve and I & C element.
   2. Pressure switch assembly between service tap isolation valve and I & C elements.
   3. Other instrument piping that is specified beyond isolation valve.

B. Other instrument piping materials are shown on the Drawings.

C. Other piping on this project is specified in Division 22, PLUMBING-WWTP and Division 23, HEATING, VENTILATING, AND AIR CONDITIONING (HVAC)-WWTP.

2.6 PIPING SCHEDULE NOTES

A. Test procedures for gravity sewer pipes, overflow pipes, and manholes are specified in Section 400510, PIPING – GENERAL-WWTP.

B. Test procedures for pressure pipes are specified in Section 400510, PIPING – GENERAL-WWTP.

C. Test pressure for process vents, drains, and sample lines to be the same as process piping connected to the line.

D. Convert piping materials where shown on Drawings.

E. Concrete encase piping below building slabs and under structures.

F. PVC or CPVC piping in this service shall be Schedule 80.

G. Some piping may be provided by equipment manufacturers. Connect to equipment with required fittings.

H. Provide protective coating as specified in Section 099600, HIGH PERFORMANCE COATINGS-WWTP.

I. See the Drawings for more detailed pipe material clarification.

J. Provide insulation for all interior and exterior exposed piping in this service where shown on the Drawings, and as specified in Section 400510, PIPING – GENERAL-WWTP.

K. Provide heat tracing and insulation for all exterior exposed piping where shown on the Drawings and as specified in Sections 400510, PIPING – GENERAL-WWTP.

L. Where indicated on Drawings, provide double-containment piping.

PART 3 - EXECUTION

3.1 GENERAL

A. All piping listed in the Piping Schedule shall be installed in accordance with the referenced detail piping specifications.

END OF SECTION

(See Piping Schedule Attached)

PIPING SCHEDULE

PIPING SERVICE	LEGEND	PIPE SIZE (inches)	INSTALLATION	SPECIFICATION SECTION (a)	TEST PRESSURE AND TYPE (PSIG - X)(b)	NOTES/REMARKS (c)
Alum	AL	1”-3”	EXPOSED	400510.13	10-P	B, I, L
Air, Low Pressure	ALP	ALL	EXPOSED	400510.04	25-P	B, D, H, J
Drain	D	ALL 6”-8” <3"	EXPOSED EXPOSED BURIED OTHER	400510.12 400510.03 400510.12 See Div 22	5-P 5-P 5-P	A, C, H A, H A, E
Digester Decant	DEC	ALL	EXPOSED ENCASED	400510.03 400510.03	10-H 10-H	B, E, H
Digested Sludge	DS	≤3” ≥4” ALL	EXPOSED EXPOSED ENCASED	400510.12 400510.03 400510.03	10-H 10-H 10-H	B, D, E, F, H
EQ Bypass	EQB	ALL	EXPOSED	400510.03	30-H	B, C, E, H
Foul Air	FA	<3"	EXPOSED	400510.12	5-P	F, G, H
Headworks Effluent	HWE	ALL	EXPOSED ENCASED SUBMERGED	400510.03 400510.03 400510.03	30-H	A, B, C, E, H
Sodium Hydroxide (Caustic)	NAOH	1”-3”	EXPOSED	400510.13	10-P	B, I, L
Sodium Hypochlorite	NAOCL	1”-3”	EXPOSED	400510.13	10-P	B, I, L
Micro-C	MIC	1”-3”	EXPOSED	400510.13	10-P	B, I
Non-Potable Water	NPW	ALL	EXPOSED ENCASED	400510.12 400510.12	150-H 150-H	B, F, K, H B, E, F
Plant Effluent	PE	ALL	EXPOSED ENCASED	400510.03 400510.03	30-H 30-H	A, B, C, H B, E, H
Polymer	POLY	ALL	EXPOSED	400510.12 400510.30	10-H 10-H	B, D, F, G, I, H
Reclaimed Water	RCLM	≥4”	EXPOSED ENCASED	400510.03 400510.03	30-H 30-H	A, B, C, H B, E, H
Secondary Effluent	SE	ALL	EXPOSED ENCASED	400510.03 400510.03	10-H 10-H	A, B, C, E, H
Sewer (Force Main)	S(FM)	ALL	EXPOSED ENCASED	400510.03 400510.03	30-H 30-H	B, C, H B, C, E, H

PIPING SERVICE	LEGEND	PIPE SIZE (inches)	INSTALLATION	SPECIFICATION SECTION (a)	TEST PRESSURE AND TYPE (PSIG - X)(b)	NOTES/REMARKS (c)
Vent (Chemical) Vent (Other)	V	ALL	EXPOSED	400510.12 See Div 22	n/a	
Waste Activated Sludge	WAS	ALL	EXPOSED ENCASED	400510.03 400510.03	10-H 10-H	B, E, H

(a) 400510.03 – DPS: Epoxy Lined Ductile Iron Pipe and Fittings-WWTP
400510.04 – DPS: Mill Type Steel Pipe and Fittings-WWTP
400510.09 – DPS: Stainless Steel Pipe and Fittings-WWTP
400510.12 – DPS: Polyvinyl Chloride (PVC) Pipe and Fittings-WWTP
400510.13 – DPS: Chlorinated Polyvinyl Chloride (CPVC) Pipe and Fittings-WWTP
400510.30 – DPS: High Density Polyethylene (HDPE) Pipe and Fittings-WWTP

(b) Designation: H = Hydrostatic, P = Pneumatic.

(c) See Section 400205, Article 2.06 for applicable notes.

SECTION 400510 – PIPING-GENERAL – WWTP

PART 1 - GENERAL

1.1 WORK INCLUDED

A. The work of this section, and of the Detail Piping Specifications hereinafter, applies to the wastewater treatment plants at the IHS Hospital Utility Campus and the IHS Hon-Dah Utility Campus.

B. This section covers the material specification for most pipe, pipe fittings, and pipe accessories to be utilized, including methods of pipe jointing and general installation guidelines.

1.2 GENERAL

A. Like items of material provided hereunder shall be the end products of one manufacturer. All piping and accessories shall be new products.

B. See the GENERAL CONDITIONS and Division 01, GENERAL REQUIREMENTS, which contain information and requirements that apply to the work specified herein and are mandatory for this project

C. All piping and equipment shall be compliant with Federal Acquisition Register the clause 52.225-11, Buy American-Construction Materials under Trade Agreements (Nov 2023) and provision 52.225-12, Notice of Buy American Requirement-Construction Materials under Trade Agreements (May 2014).

1.3 SUBMITTALS

A. In addition to the requirements of Section 013300, SUBMITTAL PROCEDURES in Division 01, GENERAL REQUIREMENTS, the following information shall be provided:

1. The Contractor shall submit to the Engineer a certification by the manufacturer that all pipe and pipe fittings comply with ANSI or other applicable national standards and the applicable portions of this specification.
2. Certified copies of all pipe hydrostatic and pneumatic tests.
3. Welding procedures and qualifications of welders for steel pipe.
4. Metal Framing Support Systems: Detailed installation drawings, catalog information, and complete component specifications.
5. Ductile Iron or Steel Wall Pipes: Manufacturer’s data, including thrust collar type and the test report substantiating the pressure rating and safety factor for fabricated thrust collars.
6. Expansion Joints and Expansion Compensators: Manufacturer’s data on materials, construction and ratings.
7. Support Systems:
   a. Drawings of each piping system locating each support, hangar, guide and anchor, including seismic bracing.
   b. Identify support, hanger, guide, and anchor type by catalog number and shop drawing detail number.
   c. Submit a piping support plan for temporary supports where piping will be encased in concrete. Submit piping support plant at least 21 days prior to pipe installation.

8. Shop Fabricated Piping: Pipe design calculations and detailed shop drawings including:
   a. Detailed pipe sections, special fittings and bends, showing dimensions, coatings and other pertinent information.
   b. Laying drawing showing location of each pipe section and each special length; number or otherwise designate laying sequence on each piece.
9. Manufacturer catalog data and information for each specified product.
10. Hydraulic Thrust Restraint: Details including materials, sizes, and assembly ratings, and pipe attachment methods for each pipe material.
11. Thrust blocks including concrete quantity, area of bearing on pipe, and fitting joint locations.
12. Joint types, materials, details and drawings for dissimilar buried pipes, restrained joints, couplings, and other similar piping accessories.
13. Manufacturer's instructions for special procedures and setting dimensions.

1.04 DELIVERY, STORAGE AND HANDLING

B. General:
   1. Also see Section 016000 PRODUCT REQUIREMENTS for other requirements.
   2. Accept all piping materials and accessories on site in manufacturer's original packaging and inspect for damage. Handle and store materials according to manufacturer's instructions.

C. Pipe:
   1. Protect, support, and handle in a manner to prevent damage to the products, especially linings and coatings.
      a. When necessary, provide shelter to store pipe and apply water to prevent excessive drying.
      b. During cold weather, store pipe on supports to prevent damage to coating.
      c. Do not store pipe on rock or other hard surface.
   2. Use implements, tools, facilities, and equipment suitable for proper and safe protection and handling of piping; do not drop or dump pipe into trenches.
      a. Use heavy canvas or nylon slings, not chains or cables, to lift pipe and fittings.
   3. Cement-Mortar or Polyethylene Lined Pipe: Tightly close ends with polyethylene plastic wrap to protect cement-mortar or polyethylene lining during shipment; leave plastic wrap on pipe until installation.
   4. Remove pipe that is damaged beyond repair, in the opinion of the Engineer.

D. Rubber Gaskets:
   1. Store in a cool, well-ventilated area.
   2. Do not expose to the direct rays of the sun.
   3. Do not allow contact with oils, fuels, or petroleum solvents.

1.4 SEQUENCING AND SCHEDULING

A. Slab, Floor, Wall, and Roof Penetrations:
   1. Order wall pipes and sleeves sufficiently early to ensure they are available for placement in concrete forms.
   2. Verify size and location of building and structure penetrations before forming and placing concrete.

1.5 SYSTEM DESIGN REQUIREMENTS AND QUALITY ASSURANCE

A. General:
   1. The Specifications and Drawings are not all inclusive with explicit piping details; provide piping and perform work in accordance with laws and regulations and intended use, including:
      a. Power Piping: ANSI/ASME B31.1 Code.
      b. Process Piping: ANSI/ASME B31.3 Code.
      c. Building Service Piping: ANSI/ASME B31.9 Code.
      d. Sanitary Building Drainage and Vent Systems: ICBO/IAPMO Uniform Plumbing Code.
      e. Fuel, Digester Gas, Natural Gas, and Propane Gas Piping: ANSI/ASME B31.2 Code.
      f. Manufacturers Standardization Society (MSS) Pipe Hanger and Support Standards: MSS SP-58 and MSS SP- 69.
   2. Pressure Ratings and Materials Specified: Represent minimum acceptable standards for piping systems.
   3. Piping Systems: Suitable for the services specified and intended.
   4. All pipe and equipment supports and hangers shall be designed to meet the requirements of the State of Arizona for Seismic conditions as summarized in the General Structural Notes on the Drawings. Seismic provisions shall also meet the requirements specified in Section 220548, VIBRATION AND SEISMIC CONTROLS FOR PLUMBING PIPING AND EQUIPMENT-WWTP.

B. Buried Piping: Provide piping suitable for design conditions as follows:
   1. H20-S16 traffic load (AASHTO Standard Specifications for Highway Bridges) with 1.5 impact factor.
   2. Piping both with and without internal pressure.

PART 2 - PRODUCTS

2.1 GENERAL

A. The materials to be used for the process piping systems shown on the Drawings are listed by service in Section 400205, PIPING SCHEDULE-WWTP. Specific material requirements are specified in the Detail Piping Specifications (DPS) hereinafter.

2.2 PIPE JOINTS FOR EXPOSED PIPING

A. Flanges are to be used for all exposed pipe joints unless shown otherwise on the Drawings or noted below.

B. Where specified in the Detail Piping specifications, grooved end pipe joints may be used on exposed piping, 24-inches in diameter and smaller, including locations where flanged joints are shown on the Drawings. All grooved end joints within buildings shall be rigid.

C. Dismantling joints or restrained flanged coupling adapters or dismantling joints shall be used where shown on the Drawings, or as necessary to facilitate installations. Before installation, all restrained flanged coupling adaptors or dismantling joints shall be submitted to the Engineer for approval. See Section 013300, SUBMITTAL PROCEDURES.

2.3 PIPE JOINTS FOR BURIED AND CONCRETE ENCASED PIPING

A. Push-on joint pipe ends shall be used for 4-inch and larger PVC pipe buried below ground surfaces unless shown or detailed otherwise on the Drawings. All fittings shall be push-on joint restrained with concrete thrust blocking, and shall have a minimum pressure rating at least equal to that of the pipe service.

B. Push-on or mechanical joint pipe ends shall be used for ductile iron pipe buried below ground surfaces unless shown or detailed otherwise on the Drawings. All fittings for standard pressure services (less than 200 psi working pressure) shall be push-on joint restrained with concrete thrust blocking, mechanical joint restrained with concrete thrust blocking, or push-on joint or mechanical joint with alternate mechanical means of thrust restraint as specified hereinafter.

C. Push-on gasketed joints or flexible couplings shall be used to join buried steel pipe, unless shown otherwise. The flexible couplings shall be provided with thrust ties for all pressurized buried steel pipe. Flexible couplings shall be Dresser, Style 38; Smith-Blair, Style 411; or equal. Thrust ties shall sustain the force developed by 1-1/2 times the operating test pressure specified.

D. Hex bolts, fasteners, thrust ties, and miscellaneous metals used for buried and concrete encased piping systems shall be series 300 stainless steel.

E. Within the limitations noted above, all pipe materials and joints do not necessarily have to be the same for all lines in a specific service, except that the materials and joints for any particular building, or between any two buildings, or for any particular buried line, shall be the same. An exception to this is where ends must be changed from push-on to flanged to accommodate valves or fittings.

F. No change in material or joint selection will be permitted after submittal of shop drawings and their final review by the Engineer.

2.4 JOINTS FOR DISSIMILAR PIPES

A. Joints between dissimilar buried pipe (steel and ductile iron, PVC and ductile iron, etc.) shall be made with flexible transition couplings as specified hereinafter.

B. Joints between dissimilar exposed pipe (steel and stainless steel, steel and ductile iron, copper and galvanized steel, etc.) shall be made with an insulated flange or dielectric union. Flange insulation kits may be McMaster-Carr, Advance Products and System, or equal and must be compatible with the operating conditions and fluids.

2.5 PIPE PAINTING AND LABELING

A. All exposed water, gas, sludge, and other piping shall be painted for color coding and labeled as specified in Section 400205, PIPING SCHEDULE-WWTP. Coatings shall be as specified in Section 099600, HIGH PERFORMANCE COATINGS-WWTP.

2.6 BUILDING AND EQUIPMENT PIPING EXPANSION PROVISIONS

A. Pipe anchors shall be placed where required by Code or shown on the Drawings. Flexible couplings or expansion joints shall be provided for piping systems and at connections to equipment where shown. The Contractor may install additional pipe anchors and flexible couplings to facilitate piping installation, provided that he submits complete details describing location, pipe supports, and hydraulic thrust protection. Acceptable types of flexible couplings and expansion joints shall be as specified hereinafter under Article PIPE COUPLINGS AND EXPANSION JOINTS.

2.7 PIPING SUPPORT SYSTEMS

A. Piping shall be supported, in general, as described hereinafter and as shown by the pipe support details on the Drawings, and in accordance with ASME B31.1 and B31.9, and MSS SP-58 and SP-69. Manufacturers' catalog figure numbers are typical of the types and quality of standard pipe supports and hangars to be employed. Special support and hanger details are shown to cover typical locations where standard catalog supports are inapplicable.

B. No attempt has been made to show all required pipe supports in all locations, either on the Drawings or in the details. The absence of pipe supports and details on any Drawings shall not relieve the Contractor of the responsibility for providing them throughout.

C. All submerged piping supports, guides, and fasteners and those installed below channel, basin, and wet well wall tops and cover slabs or other high humidity areas such as in piping galleries shall be Type 316 stainless steel. Concrete anchors and anchor bolts shall be as specified in Section 055000, METAL FABRICATIONS-WWTP. All submerged metal piping or piping in high humidity areas shall be electrically isolated from the supports with a wrap of 1/4-inch by 3-inch neoprene rubber between the pipe and oversize clamps.

D. All support anchoring devices, including anchor bolts, inserts, and other devices used to anchor the support onto a concrete base, roof, wall or structural steel works, shall be of the proper size, strength and spacing to withstand the shear and pullout loads imposed by loading and spacing on each particular support.

E. Detailed shop drawings of all supports, including support anchoring devices, shall be supplied with the submittals specified hereinbefore.

F. Where piping penetrates a wall or connects to equipment it shall be supported by a pipe support and not by the wall or equipment. A pipe support or hanger shall be installed adjacent to each pipe fitting or in-line device such as a valve or meter for all piping larger than 4-inch.

G. Pipe support system components shall withstand the dead loads imposed by the weight of the pipes filled with water. Commercial pipe supports and hangers shall have a minimum safety factor of 5. In seismic zones, pipe supports shall also comply with all seismic design requirements. See General Structural Notes on the Drawings for seismic loading and design requirements.

H. All exposed hangers, rods, clamps, protective shields, and metal framing support components and accessories shall be galvanized steel unless noted otherwise on the Drawings.

I. Pedestal pipe supports shall be adjustable, with stanchion, saddle, U-bolt, and anchoring flange as shown, Anvil Figure 259; Eaton B-Line Figure B3090; or equal. Provide neoprene waffle isolation pad under anchoring flanges, adjacent to equipment or where otherwise required to provide vibration isolation. Pads shall be Mason Industries, Inc. Type W; Korfund Korpad 40 or 100; or equal.

J. All piping shall be supported in a manner which will prevent undue strain on any valve, fitting, or piece of equipment. In addition, pipe supports shall be provided at changes in direction or elevation, adjacent to flexible couplings, and where otherwise shown.

K. Brace all piping 2-½ inches inside diameter and larger for seismic forces in accordance with the General Structural Notes on the Drawings

L. Horizontal piping shall be supported with adjustable swivel-ring, split-ring, or Clevis type hangers as shown, Anvil, Figure 104, 108, or 260; Eaton B-Line, Figure B3198H or B3100; or equal.

M. Pipe hangers for copper and plastic piping shall be coated with a plastic or neoprene protective cover, Anvil Figure 260 ISS; Eaton B-Line Figure B3100C; or equal. No metal portion of a hanger, support, or brace shall contact pipe directly.

N. Stacked horizontal runs of small piping along walls shall be supported by a metal framing system as shown, Unistrut, Eaton B-Line Strut, Anvil-Strut, or equal. No pipe shall be supported from the pipe above it.

O. Horizontal piping hanger support rods shall be supported by attachment to the roof trusses; by attachment to steel beams with concentric loading I-beam clamps; or by attachment to concrete with inserts, brackets, or flanges fastened with concrete anchors; as required or as shown on the Drawings.

P. Vertical piping hangers and supports shall be channel and pipe straps manufactured by Unistrut, Eaton B-Line, Anvil, or equal.

Q. Unless noted otherwise on the Drawings, horizontal pipe support or hanger spacing and hanger rod sizing for steel and ductile iron pipe shall be as follows:

Pipe Size	Maximum Support and Hanger Span	Minimum Rod Size Single Rod Hangers
1-inch and Smaller	6 feet	1/4-inch
1-1/4-inch thru 2-1/2-inch	8 feet	1/4-inch
3-inch and 4-inch	10 feet	3/8-inch
6-inch	12 feet	3/8-inch
8-inch	12 feet	1/2-inch
10-inch and 12-inch	14 feet	5/8-inch
14-inch	16 feet	3/4-inch
16-inch and 18-inch	16 feet	7/8-inch
20-inch	18 feet	1-inch
24-inch	18 feet	1 ¼-inch
30-inch and larger	As shown on the Drawings	

R. The load rating for universal concrete inserts or other attachment devices shall not be less than that of the hanger rods they support.

S. When supporting cast iron and ductile iron pipe or steel pipe, locate hanger rods near all joints and at each change of direction.

T. Hanger rod sizing for plastic pipe shall be same as for steel pipe. Spacing of hangers or supports shall be as recommended by the manufacturer for the flow temperature in the pipe.

U. Vertical sway bracing shall be provided where shown, or on 10-foot maximum centers.

V. See the Detail Pipe Specifications for stainless steel piping supports and hanger requirements.

W. U-bolt type supports that tighten directly onto the pipe at the top or bottom points shall not be used for plastic or thin-walled metal (such as copper, stainless steel, etc.) pipe.

2.8 SLAB, FLOOR, WALL, AND ROOF PENETRATIONS AND CLOSURES

A. All piping penetrations of slabs, floors, walls, and roofs shall be as shown on the Drawings. It shall be the Contractor's responsibility to verify the size and location of all building and structure penetrations prior to pouring concrete.

B. Ductile Iron Wall Pipes:
   1. Provide ductile iron wall pipes where ductile iron piping passes through concrete walls, floors, slabs, and roofs which are to be watertight and where shown on the Drawings. Wall pipe end connections shall be as shown on the Drawings and as specified in the applicable Detail Piping Specification. Wall pipes shall be of a thickness equal to or greater than the remainder of the piping in the line and shall comply with the requirements for fittings in the applicable Detail Piping Specification. Flanges set flush with the face of concrete shall be tapped for stud bolts.
   2. All wall pipes shall be provided with standard ductile iron seep rings (thrust collars) wherever possible. If standard castings with integrally cast seep rings are not available to meet special conditions shown on the Drawings, special castings with a steel seep ring shall be made that will provide a watertight installation as shown on the details in the Drawings. Rubber-gasketed compression collars are not acceptable. The welding or brazing of seep rings to ductile iron wall pipes is also not acceptable. The Contractor shall place early orders for wall pipes so they are available in sufficient time for placement in concrete forms.
   3. Thrust collars shall be rated for the thrust load developed at 250 psi and shall have a minimum safety factor of 2. Wall pipes shall be as manufactured by American Cast Iron Pipe Company, or equal.
   4. Coat wall pipes as specified in Section 099600, HIGH PERFORMANCE COATINGS-WWTP. Support wall pipes by formwork to prevent contact with reinforcing steel.

C. Steel and Stainless Steel Wall Pipes:
   1. Thickness of steel and stainless steel wall pipes shall match corresponding piping to which attached.
   2. Coat wall pipes as specified in Section 099600, HIGH PERFORMANCE COATINGS-WWTP. Support wall pipes by formwork to prevent contact with reinforcing steel.

D. Pipe Sleeves:
   1. Piping passing through concrete or masonry shall be installed through hot-dip galvanized, Schedule 40 steel pipe sleeves where shown on the Drawings. Holes drilled with a suitable rotary drill will be considered in lieu of sleeves in existing walls. Plastic sleeves may be considered in some locations as specified hereinafter.
   2. All sleeves in exterior buried or water-bearing walls shall have a center flange for water stoppage unless shown otherwise. The annular space between pipes and sleeves shall be watertight. The joint shall be caulked with rubber sealant in areas not needing to be totally leak-proof, or sealed by a modular mechanical unit consisting of interlocking synthetic rubber links shaped to continuously fill the annular space between the pipe and sleeve where a leak-proof installation is needed and where shown on the Drawings. The interconnected rubber links shall be assembled with stainless steel bolts and nuts and stainless steel pressure plates under each bolt head and nut to prevent the nut from turning when the bolt

is tightened. Tightening of the bolts shall cause the rubber sealing links to expand, resulting in a watertight seal between the pipe and wall sleeve opening. The installed closure shall provide electrical isolation of the pipe from the wall sleeve. Closures shall be sized according to manufacturer's instructions for the size of pipes shown on the Drawings, and shall withstand a hydrostatic head of 40 feet of water. Annular mechanical seals shall be Link Seal by GPT/EnPro Industries, Inc; Pipe Seal by Flexicraft Industries: or equal.

3. Wall or floor sleeves shall be coated with the appropriate system for the intended location as specified in Section 099600, HIGH PERFORMANCE COATINGS-WWTP. When placing sleeves in concrete forms, support them by formwork to prevent contact with the reinforcing steel.
4. Galvanized steel pipe sleeves as specified above shall be used for all sleeves in exposed walls, in exposed floors, or in sizes greater than 12-inches inside diameter. Plastic sleeves may be used as an alternate in buried applications for sleeves equal to or less than 12-inches inside diameter. Plastic sleeves shall be made of HDPE thermoplastic with molded-in waterstop and reinforcing ribs, as manufactured by Link-Seal, Model CS, or equal.

2.9 CORROSION PROTECTION

A. Corrosion protection shall be provided for all pipe and pipe fittings as specified for specific pipe materials in PART 3 EXECUTION of this section, and in the following related sections:
   1. Section 099600, HIGH PERFORMANCE COATINGS-WWTP.

2.10 PIPE COUPLINGS AND EXPANSION JOINTS

A. General: Flexible couplings, flanged coupling adapters, restrained couplings, and transition couplings shall be provided where shown on the Drawings. Size shall be compatible with the outside diameter of pipe(s) on which the coupling is installed. Flexible couplings, transition couplings, and flanged coupling adapters shall be provided with thrust ties where required, including those not shown on the Drawings. Thrust ties shall be attached to steel pipe with fabricated lugs, and to ductile iron pipe with cast-in-place lugs or flange lugs or socket clamps thrust tied across pipe couplings or flanges. Thrust protection shall be adequate to sustain the force developed by the greater of 1.) pipe operating pressure plus transient surge pressure, or 2.) pipe test pressures specified. Buried pipe coupling’s coating system shall be fusion bonded epoxy and all bolts and nuts shall be Type 316 stainless steel. Exposed pipe couplings coating system shall match the adjoining pipeline and nuts and bolts shall match the pipeline bolting system specified in the Detailed Pipe specifications.

B. Flexible Couplings: Flexible couplings for use with exposed PVC pipe shall be Smith-Blair Omni 441, or equal. Minimum working pressure shall be 150 psi. Flexible couplings for steel pipe shall be Dresser Style 38 or Smith-Blair Style 411, or equal. Flexible couplings for use with ductile iron pipe shall be Dresser, Style 38 or 138; Smith-Blair, Style 411 or 441; or equal. Flexible couplings for steel and ductile iron pipe shall be rated for 150 psi minimum working pressure, unless noted otherwise or used for high pressure service.

C. Buried PVC Flexible Couplings: In buried applications with PVC pipe 12-inches and smaller, PVC flexible couplings shall be used. PVC flexible couplings are not allowable in exposed or concrete encased applications, or for pipes larger than 12 inches. PVC flexible couplings shall be High Deflection type couplings as manufactured by Certainteed, or equal. Couplings shall be rated for 200 psi working pressure and meet the requirements of AWWA C900 for municipal water pipe . Each coupling shall be complete with suitable gaskets to fit each particular application.

D. Transition Couplings: Transition couplings used to connect pipes with small differences in outside diameter shall be Smith-Blair Omni Style 411 or 441, or Style 413 or 415; PowerSeal Pipeline Products Style 3501; Dresser Style 62 or 162; or equal. Minimum working pressure shall be 150 psi, unless noted otherwise or used for high pressure service.

E. Flanged Coupling Adapters: Restrained flanged coupling adaptors for ductile iron and steel piping shall be Series 911 as manufactured by Smith-Blair; Series 2100 Megaflange as manufactured by EBAA Iron; Style RFCA as manufactured by Romac Industries; or equal. Restrained flanged coupling adaptors for thickwall PVC piping shall be Series 920 as manufactured by Smith-Blair; Series 2100 Megaflange as manufactured by EBAA Iron; Style RFCA-PVC as manufactured by Romac Industries; or equal. Minimum working pressure shall be 150 psi, unless noted otherwise or used for high pressure service.

F. Dismantling Joints: Restrained dismantling joints for ductile iron and steel piping shall be Romac Industries Style DJ400; Smith-Blair Style 971; or equal. Minimum working pressure shall be 150 psi, unless noted otherwise.

G. Expansion Joints and Bellows Type Flexible Couplings: Expansion joints and Bellows type flexible couplings are not necessarily shown on the Drawings, but these joints and couplings and associated pipe anchors shall be provided by the Contactor, as required to allow for thermal expansion due to differences between installation and operating temperatures. Rigid gallery and trench piping, such as screwed, soldered, grooved end, and socket weld systems, shall provide for pipe expansion by the use of expansion joints, as specified herein:

1. For Screwed, Galvanized, and Black Steel Pipe: Expansion joints for screwed, galvanized, and black steel pipe shall be Flexicraft, Model 2 expansion compensator; Hyspan Model 8503 expansion compensator; or equal. Expansion compensators shall have anti-torque device to protect the bellows. Minimum working pressure shall be 175 psig.
2. For Non-metallic Pipe: Expansion joints for non-metallic pipe such as PVC and CPVC pipe shall be Teflon bellows type having three convolutions, with ductile iron flanges, drilled 150 pound ANSI standard, and metal reinforcing bands. Expansion joints shall be furnished with limit bolts and elastic stop nuts suitable for the test pressures shown in the Piping Schedule. Expansion joints shall be rated 100 psi at 120 degrees F minimum and shall be Garlock, Style 215; ResistoFlex, R6905; or equal.
3. For PVC or CPVC Chemical Feed Pipe: Expansion joints for PVC or CPVC chemical feed piping systems shall be elastomer expansion joints with EPDM bellows, stainless steel collars and with threaded type ends. Expansion joints shall be rated for 150 psig minimum at 73 degrees F, Spears, EJ21series; or equal.

4. For Flanged Steel Pipe and For Ductile Iron Pipe: Expansion joints shall be elastomer bellows expansion joints and shall be reinforced, molded wide arch type with 125-pound ANSI flanged ends, split galvanized steel flange retaining ring, and control rods to protect the bellows from overextension. The bellows arch shall be non-filled and shall have an inner lining of an elastomeric blend suitable for the design application; for normal water applications, lining shall be Buna-N, nitrile, EPDM, or chlorobutyl. Expansion joints for low pressure air service shall be rated for use at operating temperatures of up to 250 degrees F. Rated torsional rotation shall be minimum 2 degrees for all sizes. Burst pressure shall be four times the working pressure rating. Minimum compression, extension, lateral deflection, and minimum working pressure ratings shall be as follows unless noted otherwise or used for high pressure services.

Size, in	Compression, in	Extension, in	Lateral Deflection, degrees	Working Pressure, psig
2 - 4	1.4	0.7	0.6	200
5 - 10	1.6	0.8	0.7	190
12 – 20	1.6	0.8	0.8	115
24 - 36	2.0	1.0	0.9	90

5. Flange bolt set for elastomer bellows expansion joints shall include washers over the split steel retaining rings to help provide a leak-proof joint under hydrostatic test pressures. Expansion joints shall be General Rubber Corp., Style 1015 or 1101; Proco Style 231;or equal.

H. Concrete Encased Couplings: Couplings encased in concrete shall be sleeve type couplings, Dresser, Smith-Blair, or equal, and not grooved end type couplings.

2.11 SERVICE SADDLES FOR PLASTIC PIPE

A. Service saddles for ASTM D1785 PVC and CPVC pipe, ASTM D2241 PVC pipe, and AWWA C900 PVC pipe shall have fusion bonded epoxy coated ductile iron bodies with Buna-N or EPDM gasket and stainless steel double straps and bolts. Service saddles shall be capable of withstanding 250 psi internal pressure without leakage or overstressing and the run diameter shall be compatible with the outside diameter of the pipe on which the saddle is installed. Taps shall have iron pipe threads. Saddles shall be Smith-Blair, Style 317; Ford Meter Box, Style FC 102; or equal.

2.12 TAPPING SLEEVES

A. Pipe tapping sleeves for thickwall PVC, ductile iron or steel pipe shall be Smith-Blair Product No. 622, or equal, size as shown on the Drawings. Tapping sleeves shall be able to withstand 175 psig internal pressure without leakage or overstressing. The run diameter shall be compatible with the outside diameter of the pipe on which the tapping sleeve is installed. Taps shall be flanged, AWWA C207 Class D, ANSI 150 pound drilling. Sleeves shall be constructed of carbon steel with a fusion bonded epoxy coating. All bolts and nuts shall be Type 304 stainless steel.

2.13 INSULATION

A. All insulation shall be installed per the manufacturer's recommendations.

B. Indoor Piping Systems:

1. Insulation for indoor piping shall be heavy-density, sectional, preformed glass-fiber insulation with factory-applied, vinyl-coated, and embossed vapor jacket, self-sealing lap, and UL rating. Laps and butt joints shall be sealed with pressure-sensitive joint sealing tape of the same finish as the insulation jacket, to provide a continuous vapor seal. Insulation shall be Owens-Corning, Fiberglass ASJ/SSL-II; Johns Manville, Micro-Lok HP with ASJ jacket; or equal.
2. Insulate indoor fittings with pre-molded insulation or mitered segments, wired in place, and finished with a thin coat of insulating cement, or wrapped with soft fiberglass insulation inserts covered with pre-molded PVC fitting covers. Secure cover and wrap throat and seams with matching PVC tape. Fitting covers shall be Johns Manville Zeston, Speedline, or equal.
3. Insulation at each pipe hanger and support shall include preformed rigid cell, half-round insulation, with factory-applied, vinyl-coated, and embossed vapor jacket, self-sealing lap, and UL rating. Minimum length shall be 8 inches, centered at each pipe hanger and support, and equal in thickness to the adjacent insulation.

C. Outdoor Exposed Piping Systems: Insulate aboveground or exposed outdoor piping and fittings with the same material as specified for indoors and as shown in the Pipe Insulation Schedule. Cover piping and insulation with minimum 0.016-inch thick aluminum jacket for outer insulation diameters up to 24-inches and minimum 0.020-inch thick aluminum jacket for outer insulation diameters greater than 24-inches. The jacket shall be held in place by a continuous friction type joint, providing a positive weatherproof seal over entire length of jacket. The circumferential joints shall be secured with preformed snap straps containing weatherproof sealant. Cover outdoor fittings with matching preformed aluminum jackets, two-piece elbows and flange covers, secured with stainless steel bands. Aluminum jacket and fitting covers shall be as manufactured by ITW Pabco/Childers; GLT Products; GF Urecon; or equal.

D. Pipe Insulation Schedule: Unless shown otherwise, minimum insulation thicknesses shall be as shown below.

Description	Pipe Size	Insulation Thickness	
		Indoor	Outdoor
Air, Low Pressure (ALP)	ALL	1"	--
Non-potable Water (NPW)	ALL	1 ½"	--

2.14 HEAT TRACING

A. All heat tracing shall be FM approved for NFPA Class 1, Division 1 and 2 locations, as manufactured by nVent Raychem; Chromalox; or equal. Heat-tracing strip shall be self-regulating with the property that resistance increases with temperature, so that thermal output decreases as ambient temperature increases. The heating element shall be a cross-linked conductive polymeric material with a highly temperature-dependent resistivity. Bus wires shall carry the electrical current along the entire length of the parallel heat-tracing strip and shall be No. 16 or larger AWG copper. The conductive core shall be electrically insulated with a modified polyolefin or fluoropolymer jacket that is a minimum of 28 mils thick.

B. The insulating jacket shall be one piece applied with a single extrusion. The softening point of the jacket shall be at least fifty (50) degrees F above the “T” rating of the heater, and be impervious to water and other chemicals that may be present in the environment. Heater shall be surrounded by a braid capable of carrying fault current. Braid resistance shall be less than the resistance of one bus conductor. Braid shall be protected from corrosion by a continuous outer jacket suitable for H2S and methane environments. Heater and components shall be warranted by manufacturer against defects and workmanship for a period of five years. Heat tracing tape shall be nVent Raychem BTV; or equal.

C. Power Terminations: Power supply will be 120 VAC, single-phase, 60 Hertz. Power connections shall be FM approved for the same installations as the heat-tracing strip, and shall provide positive moisture seals between the heater and the environment. Heat shrink tubing or rubber compression grommets are suitable. Power connection kits shall be as manufactured by nVent Raychem JBM-100; or equal. Junction boxes may be supplied with the power terminations or separately. Junction boxes shall be weathertight and suitable for the environment, and of suitable size to provide sufficient interior working volume. An additional one foot of heater shall be supplied at all power terminations to facilitate future maintenance.

D. End Seals Terminations: End seals shall be FM approved for the same installations as the heat-tracing strip, and shall provide electrical and environmental isolation of the conductive heating element, bus wires and ground braid. End seals shall be watertight, and of the heat shrink type or compression fit using rubber grommets. Glued end seals or RTV filled end seals are not permitted. An additional one foot of heater shall be supplied at all end terminations to facilitate future maintenance. Non-powered heater ends seals shall be as manufactured by nVent Raychem E-100 series; or equal.

E. Tees and Splices: Tees and splices in ordinary areas shall be kept to a minimum. They shall be FM approved for the same installations as the heat-tracing strip, and shall provide electrical and environmental sealing for the heater conductive heating element and bus wires, and restore the integrity of the outer jacket. Heat shrink or compression type fittings using rubber grommets specific to the heater geometry shall be used. RTV or glued fittings are not acceptable. An additional one foot of heater shall be supplied at all connections to facilitate future maintenance. Tees and splices shall be nVent Raychem JBM-100; or equal.

F. Thermostats:

1. Thermostatic control shall be kept to a minimum. Whenever possible the self-regulating nature of the heater will be used to maintain the pipe temperature within acceptable limits thereby eliminating the need for thermostatic control. Thermostats shall be FM approved for the same installations as the heat-tracing strip, and shall be of the thermo-mechanical or solid state type. Bi-metallic thermostats are not acceptable. Thermostats shall be suitable for the area and environment in which they are located. Thermostats shall have a NEMA 4X rating. Conduit entries into the thermostat enclosure shall be sealed to prevent water entry through the gland or from within the conduit system.

2. Water freeze protection systems shall be controlled with ambient sensing thermostat which actuates a contactor controlling a number of circuits. If the maximum uncontrolled temperature of the heater exceeds the system limit temperature or safe heater temperature a high limit line sensing thermostat shall be used as a high limit safety cut-off. Thermostats shall be nVent Raychem, Model AMC-1H; or equal.

G. Heat Tracing Manufacturer's Testing:
1. Combined Life and Stability: Temperature ratings of self-regulating heat tracing strips shall be based on long term property evaluations following the principles described in Underwriters Laboratories Standard UL746B "Polymeric Materials - Long Term Property Evaluations" and in IEC Publication 216-1 Part 1 "General Procedures for the Determination of Thermal Endurance Properties, Temperature Indices and Thermal Endurance Profiles." To ensure thermal stability, the manufacturer shall routinely examine production lots using a high stress accelerated aging test; test conditions and pass/fail criteria for this quality control procedure shall be established based on results from the long term property evaluations.
2. Thermal Output: Thermal output measured according to specified test procedure shall not be less than that declared by the manufacturer. Output shall be verified with an apparatus which enables the output of the heater with an apparatus which enables the output of the heater to be measured while it is installed on a metal pipe, underneath thermal insulation. A heat transfer fluid shall be circulated through the test pipe to provide a controlled temperature reference for the system. Output shall be determined by measuring watts per unit length at steady state for various temperatures in the operating range of the heater. The manufacturer shall supply details of the apparatus and specific test.

H. Heat Tracing Design:
1. Submit the complete heat tracing design for review by Engineer. Special consideration shall be given to the following items to assure that sufficient heating cable is provided:
   a. One foot adders for power connections, terminations, and connections.
   b. Pipe shoes, straps, flanges and hangers.
   c. Valves.
   d. Instruments where required.
2. Heat loss calculations shall be in accordance with IEEE 513-1983. In addition the following considerations shall be made:
   a. Heat loss safety factory shall be 10 percent.
   b. The insulation manufacturer's minimum thermal conductivity value or the minimum published ASTM thermal conductivity value for the insulation shall be used.
   c. Assume that the insulation is in good thermal contact with the pipe, and that the insulation value of the environmental covering of the insulation is negligible.
   d. Heat tracing manufacturer's minimum manufactured power output values are to be used for heater selection. Standard products only will be considered with at least two years of industrial application.
3. Submitted design information shall contain the following information in addition to drawings or sketches:

a. Pipeline location.
b. Contract drawing cross reference.
c. Heater circuit designation.
d. Heater circuit FM approvals for hazardous locations, if appropriate for circuit.
e. Heat loss (w/ft).
f. Insulation type and thickness.
g. Electrical data (volts, amps/ft, watts/ft).
h. Heater type.
i. Heater quantity per valve, support, flange, etc.
j. Description of manufacturer's test procedures for thermal output testing.

4. The heat tracing system shall be designed to operate with the following parameters:
   a. Minimum ambient temperature: 0 degrees F.
   b. Maximum ambient temperature: Thermostat off at 40 degrees F.
   c. Maximum wind velocity: 40 mph.

2.15 CONCRETE

A. Thrust Blocks and Encasement: Provide of minimum 4,000 psi at 28 days in accordance with Section 033000, CAST IN PLACE CONCRETE.

2.16 BURIED PIPING ALTERNATE THRUST RESTRAINT SYSTEMS

A. Alternate thrust restraint systems (instead of concrete thrust blocks) may be used for buried ductile iron and thickwall PVC piping at the Contractor's option for lower pressure (less than 200 psi) services. Alternate systems for lower pressure ductile iron services shall be rated for a minimum pressure of 350 psi for 3-inch to 16-inch piping and 250 psi for piping larger than 16-inch, with a minimum 2:1 safety factor. Alternate systems for lower pressure thickwall PVC services shall be rated to the full pressure rating of the pipe. Alternate systems may be:
   1. For ductile iron pipe with mechanical joint fittings, alternate thrust restraint system shall be Series 1100 Megalug as manufactured by EBAA Iron, Inc., or approved equal meeting the requirements of ANSI/AWWA C110/A21.10. Gland body and restraint components shall be made from minimum ASTM A536, 65-45-12 ductile iron and ductile iron wedges shall be heat treated to a range of 370 to 470 BHN.
   2. For ductile iron pipe with push-on joints or fittings, alternate thrust restraint system shall be Series 1700 Megalug Harness as manufactured by EBAA Iron, Inc., or approved equal meeting the requirements of ANSI/AWWA C110/A21.10. Restraint ring and wedging components shall be made from minimum ASTM A536, 65-45-12 ductile iron and wedges shall be heat treated to minimum 370 BHN. Connecting tie rods shall be made of low alloy steel conforming to ANSI/AWWA C111/A21.11.
   3. For thickwall PVC pipe with mechanical joint fittings, alternate thrust restraint system shall be Series 2000PV Megalug as manufactured by EBAA Iron, Inc., or approved equal meeting the requirements of ANSI/AWWA C110/A21.10. Gland body and restraint wedges shall be made from minimum ASTM A536, 65-45-12 ductile iron.
   4. For thickwall PVC pipe with push-on joints, alternate thrust restraint system shall be manufactured of ductile iron conforming to ASTM A536, Series 1900 or Series 2800 Megalug Harness as manufactured by EBAA Iron, Inc., or approved equal

2.17 INSULATING FLANGES, COUPLINGS, AND UNIONS

A. Materials and rating shall be in accordance with the applicable Detail Pipe Specifications. Dielectric flanges and unions shall be as provided by Watts Water Technologies; Hart Industrial; or equal. Insulating couplings shall be Smith-Blair 416 or 417; Dresser STAB-39; R.H. Baker Series 216; or equal.

2.18 TAPE WRAP

A. Tape wrap shall be minimum 35-mil total thickness butyl rubber adhesive, polyethylene-backed tape as manufactured by Polyken Tape Technology; Royston/Chase Corporation; or approved equal.

PART 3 - EXECUTION

3.1 GENERAL

A. Install all piping, fixtures, equipment, and accessories in strict accordance with the plumbing laws, rules, and regulations of the state or county, and of the IHS, whichever represents the higher standard. All work shall be approved by the state, county, and/or IHS plumbing inspector. All work shall also be installed according to AWWA C600 and C605.

B. Drawings do not attempt to show exact details of all piping, and no extra payment will be allowed for obstruction by work of other trades or local obstructions to the work under this Contract which require offsets. Where diagrams have been made to show piping connections, the Contractor is cautioned that these diagrams must not be used for obtaining material quantities. Changes in location of equipment or piping, advisable in the opinion of the Contractor, shall be submitted to the Engineer for approval before proceeding with the work. All measurements and dimensions shall be verified at the site.

C. In piping that is not flanged, install unions in piping system wherever they will expedite removal of equipment and valves.

D. All air release valves, water-lubricated bearings, and other appurtenances having water effluent shall be piped to nearest drain with copper tubing pipe, unless otherwise shown on the Drawings.

3.2 PIPE PREPARATION AND HANDLING

A. Each pipe and fitting shall be carefully inspected before the exposed pipe or fitting is installed or the pipe or fitting is lowered into the trench. Interior and exterior protective coatings shall be inspected, and all damaged areas patched in the field with material similar to the original. Plastic pipe shall not have scratches exceeding manufacturer recommended depths. Clean ends of pipe thoroughly. Remove foreign matter and dirt from inside of pipe and keep clean during and after laying. A maximum of 500 feet of pipe shall be distributed along the pipe route, on the ground surface, ahead of the trenching and excavation operation.

B. Use proper implements, tools, and facilities for the safe and proper protection of the pipe. Carefully handle pipe in such a manner as to avoid any physical damage to the pipe. Do not drop or dump pipe into trenches under any circumstances.

C. Pipe Cutting: Cutting for closure or other reasons shall be done neatly by methods which will not damage pipe. Plastic pipe shall be cut with fine tooth saw, cutter, or knife designed for use with plastic pipe. Burrs shall be removed by smoothing edges with a knife, file or sandpaper. Spigot end shall be beveled.

3.3 INSTALLATION OF BURIED PIPING

A. General:
   1. Buried piping locations are shown on the Drawings. In general, unless specifically shown otherwise in the Drawings, piping elevations and grades are not shown for all buried piping. Where pipe system invert elevations are shown on the Drawings, piping shall be installed in a straight line between adjacent elevations. Where buried pressure piping is shown on the Drawings without elevations and grades, the Contractor shall run buried piping along the lines indicated at the minimum depth of bury specified herein or as required to provide an acceptable installation, in which case the depth of bury shall not be less than that specified. The Contractor shall verify the location of existing piping prior to the submittal of pipe laying and fabrication drawings for review by the Engineer. Where interferences are encountered, the Contractor shall make necessary modifications to the piping indicated in the Drawings. Modifications shall be provided to the Engineer for review as part of the requirements of the piping submittals during construction.
   2. Locating Piping Interferences: The Contractor shall perform all necessary work required to determine the location and depth of bury of existing piping where possible interferences with proposed locations of new piping may exist, including "pot-holing" to expose the piping surface. Contractor shall inform the Engineer of his intent to do such work a minimum of 24 hours prior to the commencement of such work.
   3. Pipe Cover: Minimum pipe cover shall be 3.0 feet unless otherwise indicated.

B. Preparation of Trench: Trench Excavation and Backfill and Stabilization shall be in accordance with Section 312333, TRENCHING AND BACKFILL and as specified below:
   1. Provide pipe base material for supporting the pipe for the full width of the trench. Minimum depth of pipe base below the pipe barrel shall be 6 inches. Depth of pipe base under the pipe bell shall not be less than 4 inches.
   2. Hand-grade pipe base to proper grade ahead of pipe laying operation. Pipe base shall provide a firm, unyielding support along the entire pipe length.
   3. If the trench has been excavated below the required depth for pipe base placement without direction from the Engineer, fill the excess depth, at the Contractor's own expense, with the pipe base specified herein or foundation stabilization material as specified in Section 312333, TRENCHING AND BACKFILL to the proper subgrade. Place the pipe base or foundation stabilization material for the full width of the trench in layers not exceeding 6 inches deep and compact each layer, until the material does not yield or move, to the grade established for the pipe bedding.

C. Laying Buried Pipe:
   1. General:
      a. Do not deviate more than 1-inch from line or 1/4-inch from grade. Measure for grade at the pipe invert, not at the top of the pipe, because of permissible variation in pipe wall thickness.

b. Provide and maintain ample means and devices at all times to remove and dispose of all water entering the trench during the process of pipe laying and preparing the concrete encasement. The trench shall be kept dry until the concrete encasement is completed. No pipe shall be laid in water. Take all precautions necessary to prevent uplift and floating of the pipe prior to backfilling.

c. When the pipe laying is not in progress, including the noon hours, the open ends of pipe shall be closed, and no trench water, animals, or foreign material shall be permitted to enter the pipe.

d. Where the pipe is connected to concrete structures, the connection shall be made as shown on the Drawings. If the connection is not shown, make connection such that a standard pipe joint is located no more than 24 inches from the structure.

e. All buried PVC pipe shall be installed in accordance with the pipe manufacturer's recommendations. Smaller diameter buried plastic pipe with rigid joints shall be laid by snaking the pipe from one side of the trench to the other. Offset shall be as recommended by the manufacturer for the maximum temperature variation between time of solvent welding and during operation.

2. Installation of Concrete Embedded Piping:

a. Concrete embedded piping shall be installed as shown on the Drawings and as specified in Section 033000, CAST IN PLACE CONCRETE-WWTP. Maximum allowable distortion for concrete embedded steel pipe is 3 percent of the pipe inside diameter. The Contractor shall perform all necessary work required to ensure pipe distortion is minimized including bracing pipe inside diameter, reinforcing pipe circumferentially, increasing pipe wall thickness, and controlling concrete placement where required.

b. All concrete embedded metallic piping shall be supported as required to prevent contact with reinforcing steel during concrete installation.

c. Wall Pipes and Pipe Sleeves: Wall pipes and pipe sleeves embedded in concrete walls, floors, and slabs shall be embedded as specified in Section 033000, CAST IN PLACE CONCRETE-WWTP and as shown. Support all pipes embedded in concrete walls, floors, and slabs with formwork to prevent contact with the reinforcing steel.

3. Laying Ductile Iron Pipe:

a. Join ductile iron in strict accordance with the manufacturer's recommendations. Provide all special tools and devices, such as special jacks, chokers, and similar items required for proper installation. Lubricant for the pipe gaskets shall be furnished by the pipe manufacturer, and no substitutions will be permitted under any circumstances.

b. Pipe laying shall proceed upgrade with spigot ends pointing in direction of flow. After a section of pipe has been lowered into the prepared trench, clean the end of the pipe to be joined, the inside of the joint, and the rubber ring immediately before joining the pipe. Make assembly of the joint in accordance with the recommendations of the manufacturer of the type of joint used. Provide all special tools and appliances required for the jointing assembly.

D. Thrust Blocking and Alternate Thrust Restraint Systems:
   1. Provide thrust blocking and/or alternate thrust restraint systems at all buried bends, tees, and other similar locations even though not typically shown on the Drawings. Place thrust block concrete against undisturbed earth. Construct suitable forms to obtain shapes that will provide full bearing surfaces against undisturbed earth, as indicated. Cure thrust blocks before conducting hydrostatic tests. Take care not to over excavate in the areas where thrust blocks are to be placed. The blocking shall be so placed, unless specifically shown otherwise, so that pipe and fitting joints will be accessible for repairs. Thrust blocks shall be sized for hydrostatic test pressure and an allowable soil bearing stress of 2,000 psf maximum.
   2. Alternate mechanical thrust restraint system may be used for lower pressure services buried ductile iron piping systems as specified hereinbefore. For high pressure buried ductile iron piping services, provide alternate thrust restraint systems and concrete thrust blocks as specified hereinbefore. Install alternate thrust restraint systems per the manufacturer’s installation instructions and AWWA C600.
   3. No references to thrust protection details for buried and embedded piping have been shown on the Drawings unless special details are required. The absence of details on any Drawings shall not relieve the Contractor of the responsibility for providing them throughout.

E. Connecting Dissimilar Pipe Materials:
   1. Connect dissimilar pipe materials by means of a flexible coupling specified hereinbefore. Install couplings in strict accordance with the manufacturer's recommendations.

3.4 INSTALLATION OF FLEXIBLE COUPLINGS, FLANGED COUPLING ADAPTERS, TRANSITION COUPLINGS, RESTRAINED COUPLINGS, AND SERVICE SADDLES

A. Prior to installation, thoroughly clean oil, and dirt from the pipe to provide a clean seat for the gasket. Care shall be taken that the gaskets are wiped clean before they are installed. Flexible couplings, flanged coupling adapters, and transition coupling gaskets shall be lubricated with manufacturer’s standard lubricant before installation on the pipe ends. Install in accordance with the manufacturer's recommendations. Bolts shall be tightened progressively, drawing up bolts on opposite sides until all bolts have a uniform tightness. Workmen tightening bolts shall use torque-limiting wrenches.

3.5 INSTALLATION OF EXPOSED PIPING

A. All pipe flanges shall be set level, plumb, and aligned. All flanged fittings shall be true and perpendicular to the axis of the pipes. All bolt-holes in flanges shall straddle vertical centerline of pipes.

B. Piping shall be installed without springing or forcing the pipe in a manner which would set up stresses in the pipe, valves, or connected equipment.

C. Unless shown otherwise, piping shall be parallel to building lines. Hangers on adjacent piping shall be aligned where possible on common size ranges.

D. On screwed or welded pipe, unions shall be installed where required for piping or equipment installation, even though they are not shown on the Drawings.

E. Plastic flanges shall be bolted up using a filler gasket at any joint with a raised face. The filler gasket shall bear the bolt load uniformly and remove the flange moment from that part of the flange protruding beyond the outer edge of the raised face.

F. Pipe taps to the pipe barrel are unacceptable. Pipe tap connection to ductile iron piping shall only be made at a tapping boss of a fitting, valve body, or equipment casting. Pipe tap connections to steel piping shall be made only with a welded thread-o-let connection.

G. Required straight runs of piping upstream and downstream of flow measuring devices shall be smooth.

H. Where valve hand wheels are shown, valve orientation shall be as shown. Where valve hand wheels are not shown, valves shall be oriented to permit easy access to the hand wheels, and to avoid interferences.

I. Unions, strainers, and all other similar in-line devices shall be installed in piping in a manner which allows adequate clearances for maintenance of the device.

J. Lateral supports for seismic loads shall be provided at all changes in direction.

3.6 PIPING CORROSION PROTECTION

A. General:
   1. All pipe and accessories shall be protected from corrosion and adverse environmental conditions. Protection shall include lining and coatings of pipe, material selection, and/or coatings of supports, tie rods, expansion joints, and all other piping accessories and appurtenances.
   2. Also see Section 099600, HIGH PERFORMANCE COATINGS-WWTP and the Detail Piping Specifications.

B. Buried Piping Accessories:
   1. All buried pipe appurtenances made of steel shall have corrosion protection as specified in Section 099600, HIGH PERFORMANCE COATINGS-WWTP. Flange bolts, nuts, tie rods, and similar items shall be stainless steel or fusion bonded coated. Flexible couplings, grooved couplings, and similar items shall be fusion bonded epoxy coated.

C. Exposed Piping Accessories:
   1. All exposed surfaces of black and hot-dip galvanized steel, brass, copper and bronze piping components including, but not limited to, pipe supports, expansion joints, pipe guides, flexible couplings, vent and drain valves and fasteners shall be painted in accordance with Section 099600, HIGH PERFORMANCE COATINGS-WWTP.
   2. Pipe support systems shall be painted the same color and paint system as the supported piping. Stainless steel pipe supports shall not be painted unless directed by Engineer.

D. Ductile Iron Pipe:
   1. For Exposed Ductile Iron: Exterior protection shall be in accordance with Section 099600, HIGH PERFORMANCE COATINGS-WWTP. Fittings, bolts, and nuts shall be coated the same as the pipe.
   2. Epoxy Linings: All ductile iron pipe shall be epoxy-lined.
   3. Exterior Protection for Buried, Submerged, or Encased Pipe:

a. All submerged or concrete encased ductile iron or cast iron soil piping shall be coated with epoxy, and coating shall be as specified in Section 099600, HIGH PERFORMANCE COATINGS-WWTP. Coating shall be applied by a qualified coating applicator.
b. All abraded areas of epoxy coatings on ductile iron to be submerged or concrete encased shall be cleaned and repaired to provide a protective covering equal to the original and acceptable to the Engineer.

3.7 PROTECTION FOR NON-METALLIC PIPE

A. For all non-metallic pipe, duct, and other accessories exposed and outside of buildings, ultraviolet protection and/or color coding shall be provided by coating pipe as specified in Section 099600, HIGH PERFORMANCE COATINGS-WWTP.

B. Interior exposed stainless steel, PVC, and CPVC pipe shall be color coded per Section 400205, PIPING SCHEDULE-WWTP, using paint as specified in Section 099600, HIGH PERFORMANCE COATINGS-WWTP.

3.8 COLOR CODING

A. Identification and color coding of piping systems shall be as specified in Section 400205, PIPING SCHEDULE-WWTP. Coatings shall be applied to piping prior to insulating. Identification and color coding shall also be applied to the exterior covering of insulated piping.

3.9 EXPANSION PROVISIONS

A. All piping support systems shall have adequate provisions for accommodating pipe movement due to thermal expansion and/or terminal point movements. Piping expansion provisions shall be provided as specified hereinafter.

B. Expansion joint details for all piping systems have not been shown unless special details are required. The absence of details on any Drawings shall not relieve the Contactor of the responsibility for providing them throughout the plant. Any modifications to the piping systems which have expansion joint details shown on the Drawings, including the addition of expansion joints where not shown, shall require a review of the piping system indicated. All proposed modifications to the piping systems shown on the Drawings shall be reviewed by the Engineer, prior to construction. The cost of modifying the existing piping system shall be borne by the Contractor.

C. Expansion Provisions for Grooved End Piping: In those piping systems where the Contractor is given the option of providing either flanged or grooved end joints, expansion provision requirements shall be provided as follows:
1. For piping 3 inches and larger, piping expansion joints indicated on the Drawings may be replaced by an expansion control system incorporating flexible type grooved end joints only where approved by the Engineer.
2. For piping smaller than 3 inches, piping expansion provisions are specified hereinafter. Grooved end piping expansion control systems may be used in lieu of that specified.

D. Expansion Provisions for Piping Smaller Than 3 Inches:

1. Expansion provisions for steel piping less than 3-inch nominal diameter shall be provided with piping flexibility using expansion bellows type couplings or piping bends. Maximum spacing of couplings or bends shall be as indicated herein under expansion joint spacing. Expansion square-bends shall be used in straight piping runs to provide expansion flexibility. Square-bend dimensions shall be as required by the specific application for an allowable piping stress of 12,000 psi. Minimum piping temperature for calculations shall be 40 degrees F. Maximum piping temperature shall be 100 degrees F or the maximum operating temperature indicated in Section 400205, PIPING SCHEDULE-WWTP, whichever is greater. Piping anchors shall be installed at the midpoint between expansion bends, where more than one expansion bend is required in a straight run of piping.
2. Expansion provisions for copper piping greater than 1-inch nominal diameter shall be provided with piping flexibility using expansion bellows type couplings or piping bends. Maximum spacing of couplings or bends shall be as indicated herein under expansion joint spacing. Expansion U-bends or loops shall be used in straight piping runs to provide expansion flexibility. U-bend or loop dimensions shall be as required by the specific application for an allowable piping stress of 4,000 psi. Minimum piping temperatures for calculations shall be 40 degrees F. Maximum piping temperature shall be 100 degrees F or the maximum operating temperature indicated in Section 400205, PIPING SCHEDULE-WWTP, whichever is greater. Piping anchors shall be installed at the midpoint between expansion bends, where more than one expansion bend is required in a straight run of piping.
3. Expansion provisions for PVC, CPVC and FRP piping less than 3-inch nominal diameter shall be provided with piping flexibility using expansion type bellows couplings or piping bends. Maximum spacing of couplings or bends shall be as indicated herein under expansion joint spacing. Expansion square-bends shall be used in straight piping runs to provide expansion flexibility. Square-bend dimensions shall be as required by the piping manufacturer for the specific application. Minimum piping temperature for calculations shall be 40 degrees F. Maximum piping temperature shall be 100 degrees F or the maximum operating temperature indicated in Section 400205, PIPING SCHEDULE-WWTP, whichever is greater. Piping anchors shall be installed at the midpoint between expansion bends, where more than one expansion bend is required in a straight run of piping.
4. Where the application excludes the use of the piping expansion provisions specified, the Contractor shall provide expansion joints designed for the indicated service and application. The Contractor shall provide details of the proposed installation to the Engineer for review as part of the requirements specified herein for Paragraph SUBMITTALS. Installation shall include two pipe alignment guides on each side of the expansion joint spaced at 4 and 14 pipe diameters from the expansion joint. Provide piping anchors at the limits of all straight runs of piping requiring expansion joints. For straight runs of piping requiring more than one expansion joint, piping anchors shall be installed at the midpoint between piping expansion joint locations.

E. Expansion Joint Spacing (Piping Smaller Than 3 Inches): Unless closer spacing is indicated on the Drawings, the maximum spacing for expansion joints shall be:

Type of Pipe	Max. Run Without Expansion Joint, Loop or Bend (Ft)	Expansion Joint Max. Spacing in Straight Runs Bounded By Expansion Joints (Ft)
Stainless Steel	30	100
PVC, CPVC	20	60
FRP	40	100

3.10 TESTING

A. General: The Contractor shall conduct pressure and leakage tests concurrently on all newly installed pipelines in accordance with this specification and AWWA C600 and C605. Furnish all necessary equipment and material and make all taps in the pipe, as required. The Engineer will monitor the tests and all testing and results must meet the satisfaction of the Engineer. Test pressures shall be as specified in Section 400205, PIPING SCHEDULE-WWTP. New pipelines which are to be connected to existing pipelines shall be tested by isolating the new pipe with grooved end pipe caps, spectacle blinds, or blind flanges, plugs or other fittings as appropriate for the pipe type.

B. Preparation and Execution: Conduct hydrostatic and leakage tests on buried piping after the trench has been adequately backfilled. The Contractor may, if field conditions permit, as determined by the Engineer, partially backfill the trench and leave the joints open for inspection and conduct an initial service leak test. The acceptance test shall not, however, be conducted until all backfilling has been completed. Conduct the tests on exposed piping after the piping has been completely installed, including all supports and anchors. Exposed piping shall have no visible leakage.

C. Hydrostatic Leak Test:
   1. Water: Water for testing shall be clean and be provided by the Contractor. It shall be the Contractor's responsibility to pipe, valve, pump, and otherwise transport water from the source to the new pipe. Test water shall be clean and shall be of such quality as to minimize corrosion in the piping system.
   2. Procedure: Slowly fill the test section with water to expel air from the pipeline. Temporary vent outlets with valves shall be installed as required for complete venting of the pipeline during filling. Venting during the filling of the system also may be provided by the loosening of flanges having a minimum four bolts or by the use of equipment vents. All parts of the piping system shall be subjected to the test pressure specified in Section 400205, PIPING SCHEDULE-WWTP, or as specified hereinafter. The hydrostatic test pressure shall be continuously maintained for a minimum time of 60 minutes and for each additional time as may be necessary to conduct examinations for leakage. Examination for leakage shall be made at all joints and connections. The piping system, exclusive of possible localized instances at pump or valve packing, shall show no visual evidence of weeping or leaking. Any visible leakage shall be corrected at the Contractor's sole expense.

3. Testing Equipment: The Contractor shall provide all necessary piping connections together with test pumping equipment, water meters, pressure gauges, hose and suction pipe, and other materials, equipment, facilities, and labor required for the tests. Water meters and pressure gauges shall be accurately calibrated and shall be subject to inspection by the Engineer. Test pressures shall be applied by means of a force of such design and capacity that the required pressure can be applied and maintained without interruption for the duration of each test.
4. Test pressures and limitations shall be as follows if not specifically noted in Section 400205, PIPING SCHEDULE-WWTP:
   a. Sections shall be tested at 1.5 times the working pressure at the point of testing.
   b. Test pressure shall be greater than 1.25 times the normal working pressure at the highest point along the test section.
   c. Test pressures shall not exceed pipe, fitting, valves, or thrust block design pressures.
   d. Pressures shall not vary by more than plus or minus 5 psi.
   e. Minimum test pressure shall be 50 psi.
5. Buried Pressure Lines:
   a. A minimal amount of leakage is permissible from buried pressure lines. Consequently, the hydrostatic testing of these pipelines must be conducted in a different manner, as follows.
   b. Where any section of pipe is provided with concrete thrust blocking, do not make the pressure test until the concrete has reached at least 75 percent of its design strength and a minimum of at least 6 days have elapsed after the thrust blocking is installed. If high-early cement is used for thrust blocking, the time may be reduced to 3 days. When testing cement mortar lined piping, slowly fill the section of pipe to be tested with water and allow to stand for 24 hours under slight pressure to allow the cement-mortar lining to absorb water.
   c. Expel all air from the piping system prior to testing and apply and maintain the specified test pressure by means of the hydraulic force pump. Valve off the piping system when the test pressure is reached and conduct the pressure test for 2 hours, reopening the isolation valve only as necessary to restore the test pressure. The pump suction shall be in a barrel or similar device, or metered so that the amount of water required to maintain the test pressure may be measured accurately. This measurement represents the leakage, which is defined as the quantity of water necessary to maintain the specified test pressure for the duration of the test period. No pipe installation will be accepted if the leakage is greater than the number of gallons per hour as determined by the following formula:

$$L = \frac{SD\,(P)^{1/2}}{148{,}000}$$

where L = Allowable leakage in gallons per hour
S = Length of pipe tested in feet
D = Nominal pipe diameter in inches
P = Average test pressure in psi

6. Leakage Repair: The Contractor shall repair any leakage at his own expense and retest the pipeline until allowable leakage is achieved.

D. Pneumatic Leak Tests:

1. Equipment: Contractor shall conduct and furnish the following equipment for the pneumatic tests:

Amount	Description
1	Pneumatic compressor separator-dryer system capable of providing oil-free dry air and equipped with one or more full capacity safety relief valves set at a pressure of not more than 105 percent of the required primary test pressure.
1	Calibrated test gauge.

2. Procedure:
   a. Pneumatic testing shall be performed using accurately calibrated instruments and oil-free, dry air. Test shall be performed only after the piping has been completely installed, including all supports, hangers and anchors, and inspected for proper installation. All parts of the piping system shall be subjected to test pressure specified in Section 400205, PIPING SCHEDULE. The Contractor shall recognize the hazards associated with air testing and shall take all necessary precautions to protect test personnel and Owner's operating personnel. All piping to be tested shall be secured to prevent damage to adjacent piping and equipment in the event of a joint failure. Any appurtenant instruments or devices that could be damaged by the test shall be removed from the piping or suitably isolated prior to applying the test. Prior to starting the test, the Contractor shall notify the Engineer.
   b. A preliminary pneumatic test not to exceed 25 psig shall be applied to the piping system prior to final leak testing, as a means of locating major leaks. Examination for leakage, detected by soap bubbles, shall be made at all joints and connections. After all visible leaks have been corrected, the pressure in the system shall gradually be increased to not more than ½ of the test pressure, after which the pressure shall be increased in steps of approximately 1/10 of the test pressure until the required test pressure has been reached. The pneumatic test pressure shall be continuously maintained for a minimum time of 10 minutes and for such additional time as may be necessary to conduct a soap bubble examination for leakage. The piping system, exclusive of possible localized instances at pump or valve packing, shall show no evidence of leakage. Any visible leakage or pressure loss shall be corrected at the Contractor's sole expense.
   c. Following pneumatic testing, lines which are to carry flammable gases shall be thoroughly purged with nitrogen to assure that no explosive mixtures will be present in the system during the filling process.

E. Initial Service Leak Tests:

1. Equipment: Equipment used for initial service leak testing may be the same as that specified under HYDROSTATIC AND PNEUMATIC LEAK TESTS hereinbefore, or the pump or compressor connected to the piping system.

2. Procedure: The initial service leak test shall be performed by gradually bringing the piping system up to normal operating pressure and holding it there continuously for a minimum time of 10 minutes. Examination for leakage shall be made at all joints and connections. Soap bubbles shall be used to detect leaks in pneumatically-tested systems. The piping system, exclusive of possible localized instances at pump or valve packing, shall show no visual evidence of weeping or leaking. Any visible leakage or pressure loss shall be corrected at the Contractor's sole expense.

F. Test Records: Records shall be made of each piping system installation during the test. These records shall include:
1. Date of test.
2. Description and identification of piping tested.
3. Test fluid.
4. Test pressure.
5. Remarks, to include such items as:
   a. Leaks (type, location).
   b. Repairs made on leaks.
6. Certification by Contractor and signed acknowledgment by Engineer.

3.11 INTERIM CLEANING

A. Care shall be exercised during fabrication to prevent the accumulation of weld rod, weld spatter, pipe cuttings and filings, gravel, cleaning rags, etc. within piping sections. All piping shall be examined to assure removal of these and other foreign objects prior to assembly. Shop cleaning may employ any conventional commercial cleaning method if it does not corrode, deform, swell, or otherwise alter the physical properties of the material being cleaned.

3.12 FINAL CLEANING

A. Following assembly and testing and prior to final acceptance, all pipelines installed under this section, except chemical gas, air lines, fuel lines, and instrument air lines, shall be flushed with water and all accumulated construction debris and other foreign matter removed. Flushing velocities shall be a minimum of 2.5 feet per second. Cone strainers shall be inserted in the connections to attached equipment and left there until cleaning has been accomplished to the satisfaction of the Engineer. Accumulated debris shall be removed through drains 2-inch and larger or by removing spools and valves. Immediately following drainage of flushed lines, the piping shall be air dried with compressed air.

B. It must be understood that flushing removes only light solids and cannot be relied on to remove heavy materials allowed to get into the pipe during installation. If necessary, the Contractor shall also clean pipelines 2 inches and larger by pigging with an acceptable flexible pig made specifically for this purpose.

C. Chemical gas, air, fuel lines, and instrument air piping shall be blown clean of loose debris with compressed air.

3.13 WALL PIPES AND PIPE SLEEVES

A. Wall pipes and pipe sleeves embedded in concrete walls, floors, and slabs shall be embedded as specified in Section 033000, CAST IN PLACE CONCRETE-WWTP and as shown. Support all pipes embedded in concrete walls, floors, and slabs with formwork to prevent contact with the reinforcing steel.

3.14 FLEXIBLE JOINTS AT CONCRETE STRUCTURES

A. A flexible joint shall be provided at the face of all manholes or other structures. The joint may be flush with the face, may be up to one-half pipe diameter away from the face, but shall not be more than 24 inches away from the face, unless specifically shown otherwise on the Drawings.

B. A second flexible joint shall be provided within 24 inches of the first joint.

C. Flexible joints may be rubber ring joints, mechanical joints, or flexible couplings, unless shown otherwise on the Drawings.

3.15 PERMISSIBLE DEFLECTION AT JOINTS

A. Wherever it is necessary to deflect pipe from a straight line, either in the vertical or horizontal plane, do not exceed 50 percent of the amount of deflection recommended by the pipe or coupling manufacturer, or as shown on the Drawings.

3.16 INSTALLATION OF INSULATING FLANGES, COUPLINGS, AND UNIONS

A. Install insulating flanges, couplings, or unions wherever copper and/ or dissimilar ferrous metal piping are connected, wherever metallic lines enter buildings, wherever submerged metallic piping is connected to unsubmerged piping, and where shown on the Drawings, all in accordance with the manufacturer's recommendations. Insulated joints connecting submerged piping to exposed piping shall be installed above maximum water surface elevation and before the first pipe support not having coated anchor bolts or adhesive-bonded concrete anchors. All submerged metallic piping shall be isolated from the concrete reinforcement.

3.17 INSULATION

A. All piping and equipment to be insulated shall be insulated in accordance with manufacturer's instructions including types of insulating cements, lagging adhesives, and weather-proof mastics if different from those specified.

B. All insulation shall be applied over clean, finish painted, and dry surfaces with all joints butted firmly together, but not until piping system has been pressure tested and any leaks corrected. Insulation shall not extend beyond flanges nor cover nameplates or code inspection stamps. Insulation shall run continuous through wall openings, ceiling openings, pipe hangers, pipe supports, and pipe sleeves, unless otherwise noted.

C. Where connection is shown to existing piping, the existing insulation shall be cut back to remove the portion damaged by the piping revisions, and new insulation installed. The joint between the old and new insulation shall be finished as hereinbefore specified.

D. The Insulation Contractor shall furnish precut, sized sections of closed cell rigid insulation with vapor barrier to the Mechanical Contractor to be inserted under piping and centered at each hanger and support location. Provide continuous vapor barrier at all joints between rigid insulation and pipe insulation.

E. Insulate all valve bodies, flanges, and pipe couplings. Provide removable insulation sections on all devices that require access for maintenance of equipment or removal, such as unions, strainer end plates, etc. Do not insulate flexible pipe couplings.

F. Finished appearance of all insulation shall be smooth and continuous. Provide coating of insulating cement where needed to obtain this result. Joints shall be lapped and the integrity of vapor seals maintained in strict accordance with manufacturer's instructions. Staples and screws shall not be used to secure components of systems that are vapor sealed.

G. Care shall be taken to apply the insulation and vapor barrier coating on exterior piping so that it will not be damaged when the prefabricated aluminum fitting covers are applied. The prefabricated aluminum covers shall serve as weatherproof enclosures over fittings. No screws or rivets shall be used in fastening the fitting covers, as they may puncture the vapor seal.

H. Exterior flanges and unions shall have removable prefabricated aluminum covers.

3.18 HEAT TRACING

A. The self-limiting heat tracing system, including heat tracing strip, power terminations, end seal terminations, tees, splices, thermostats, and all other system components, shall be installed in accordance with the manufacturer's recommendations. The manufacturer shall furnish installation detail drawings clearly showing the proper application of the heater to the components of the piping system.

B. Fastening Tape: Heat tracing shall be attached to pipe at a maximum of 1-foot intervals using fiberglass tape, nVent Raychem/Chemelex, Model GT-66; or equal.

C. The application of the heater to valves, filters and other items requiring servicing shall be done in a configuration that does not require cutting of the tracing to routinely service the equipment. The heat tracing shall be cut to the proper length and terminated at the jobsite by the installer. Prior to the installation of the terminal insulation each heater circuit shall be megger tested from conductor to ground, conductor to sheath, and for heaters with a jacket over the braid, braid to ground. The resistance values shall be recorded. This test should again be performed after installation of the thermal insulation.

3.19 FABRICATION OF FLANGED PIPE

A. Flanged pipe shall be fabricated in the shop, not in the field, and delivered to the jobsite with flanges in place and properly faced. Threaded flanges shall be individually fitted and machine tightened on matching threaded pipe by the manufacturer. Flanges shall be faced after fabrication in accordance with ANSI A21.15/AWWA C115. A sufficient number of selected flange-to-pipe threaded joints shall be hydrostatically shop tested to ensure joint integrity.

3.20 JOINT HARNESSES FOR STEEL PIPING

A. Where harnessing across flexible couplings or flanged coupling adaptors is indicated, adequately designed joint harnessing shall be provided. The harnessing assembly shall consist of a combination of adequately designed harness lugs and a suitable number of high strength tie rods. The bearing plate under the harness rod nut shall be of adequate thickness and beam strength to ensure little or no deflection under thrust loads. Pipe wall where the harness lugs attach shall be reinforced if necessary.

B. The harnessing design shall be based on maximum thrust induced by an internal pressure as defined in the test pressures in Section 40 02 05, PIPING SCHEDULE-WWTP, or 100 psig minimum, and shall be submitted with the shop drawings for the pipe and fittings, all of which shall be reviewed by the Engineer before fabrication is started. The harness and accessories shall be furnished with a shop applied primer suitable for finished painting.

3.21 ADDITIONAL CONSIDERATIONS FOR DUCTILE IRON OR STEEL PIPE

A. Transportation, Storage and Handling for Ductile Iron and Steel Pipe: Shop coated materials shall be handled, transported, stored and shipped in a manner that will prevent damage to the coating and lining. Coating or lining damaged in handling or other operations shall be repaired to the approval of and at no additional cost to the Owner. Damage to the coating or lining shall be repaired. At all times during construction, the Contractor shall use every precaution to prevent damage to protective coating and lining on the pipe. No metal tools or heavy objects shall be permitted to come into contact unnecessarily with the finished coating. Workmen shall not be permitted to walk upon the coating except when absolutely necessary; in such case, they shall wear shoes with rubber or composition soles and heels or other suitable footwear that will not damage the coating. Any damage to the pipe or the protective coating from any cause during the installation of the pipeline and before final acceptance by the Engineer shall be repaired in accordance with these Specifications and at no additional cost to the Owner. Adequate cross bracing shall be installed in the ends of the pipe to maintain the pipe roundness during transportation and handling. The ends of the pipe shall be sealed with clear polyethylene film at the point of manufacture. The seals shall remain until the pipe is being prepared to be installed.

B. Pipe shall be hoisted by means of wide-belt slings. Metal chains, cables, tongs or other equipment likely to cause damage to the coating shall not be permitted. The Contractor shall allow inspection of the coating on the underside of the pipe while the pipe is suspended from the slings. Coated pipe shall be handled with nylon sling choker belts or equivalent. Caliper clamps shall not be used. Sufficient shoring of dunnage, padding and bonding shall be used when stacking and shipping pipe to adequately protect the pipe and its coating.

C. Cut ends of pipe shall be beveled and filed to prevent gasket damage in joint assembly.

D. Bolted sleeve-type couplings shall be installed in accordance with AWWA C219. Install joint harnesses in accordance with AWWA M11.

3.22 VENTS AND DRAINS

A. Vent the high points and drain the low points of all pipelines, except gravity flow services, whether shown on the Drawings or not. Use ¾-inch manual ball valves on pipelines 3-inch and larger and ½-inch manual ball valves on pipelines 2-1/2-inch and smaller. Valve types shall be as shown on the Drawings. Where ball valves do not appear on the Drawings for a particular service, Type V300, V307, V330, or V335 valves as appropriate and as specified in Section 400553, MANUAL VALVES-WWTP, shall be used.

3.23 SAFETY CONSIDERATIONS

A. No water piping shall be installed immediately over or within a 3-foot plan view clearance of any electrical panel, motor starter, or mechanical mounting panel. Where piping must be located within these zones, install piping inside a PVC conduit or shield the electrical device to prevent direct water access to electrical equipment in the event of a pipe leak, or provide other protection as allowed by the National Electrical Code.

3.24 CONFINED SPACE ENTRY

A. The Contractor shall satisfy confined space entry requirements for the Engineer and Owner to enter covered structures, large pipes, pipe galleries, and other confined spaces. The requirements shall include furnishing and operating air quality testing equipment, furnishing and operating air movement equipment, and furnishing and operating other equipment and manpower to satisfy confined space entry requirements.

END OF SECTION

SECTION 400510.03 – DPS – EPOXY LINED DUCTILE IRON PIPE AND FITTINGS – WWTP

PART 1 - GENERAL

1.1 WORK INCLUDED

A. This section covers the work necessary to furnish and install, complete, the cement lined ductile iron pipe and gray cast iron or ductile iron fittings specified herein, and as specified further in Section 400510, PIPING – GENERAL-WWTP.

1.2 GENERAL

A. See Section 40 05 10, PIPING – GENERAL-WWTP, for additional requirements.

1.3 REFERENCE STANDARDS

A. American Water Works Association:
1. AWWA C105 - Polyethylene Encasement for Ductile-Iron Pipe Systems.
2. AWWA C110 - Ductile-Iron and Gray-Iron Fittings.
3. AWWA C111 - Rubber-Gasket Joints for Ductile-Iron Pressure Pipe and Fittings.
4. AWWA C115 - Flanged Ductile-Iron Pipe with Ductile-Iron or Gray-Iron Threaded Flanges.
5. AWWA C116 - Protective Fusion-Bonded Epoxy Coatings for the Interior and Exterior Surfaces of Ductile-Iron and Gray-Iron Fittings.
6. AWWA C150 - Thickness Design of Ductile-Iron Pipe.
7. AWWA C151 - Ductile-Iron Pipe, Centrifugally Cast.
8. AWWA C153 - Ductile-Iron Compact Fittings.

B. ASME International:
1. ASME B16.1 - Gray Iron Pipe Flanges and Flanged Fittings: Classes 25, 125, and 250.
2. ASME B31.3 - Process Piping.

C. ASTM International:
1. ASTM A48/A48M - Standard Specification for Gray Iron Castings.
2. ASTM B-117 - Salt Spray (scribed panel)
3. ASTM G-95 - Cathodic Disbondment
4. ASTM D-714 - Immersion testing
5. ASTM G-22 - Bacterial Resistance

D. EN European Standards:
1. 598: Section 7.8 Abrasion Resistance

PART 2 - PRODUCTS

2.1 PIPE

A. Centrifugally cast, Grade 60-42-10 iron, in accordance with AWWA C151/ANSI A21.51, ceramic epoxy-lined in accordance with AWWA C116/ANSI A21.16, 250 psi minimum working pressure, except as follows:
1. Threaded flanged pipe shall be Class 53 minimum for 4-inch through 48-inch.
2. Grooved end pipe shall be Class 53 minimum for 4-inch through 12-inch, Class 54 minimum for 14-inch and larger.
3. Buried pipe shall be thickness Class 51 minimum for 4-inch through 24-inch pipe and Class 53 minimum for 30-inch and greater pipe, unless a thicker class pipe is dictated by ANSI A21.51, Tables 51.2 and 51.3.

2.2 JOINTS

A. Flanged, grooved end, mechanical joint or push-on as specified herein, with application as specified in Section 400510, PIPING – GENERAL-WWTP, or as shown on the Drawings.

B. Flanged joint pipe shall conform to AWWA C115/ANSI A21.15 and shall use ductile iron flanges.

C. Grooved end joints shall be rigid type, radius cut grooved, conforming to AWWA C606.

2.3 FITTINGS

A. Gray or ductile iron, 250 psi minimum working pressure, ceramic epoxy-lined and seal-coated. Where taps are shown on fittings, tapping bosses shall be provided. ANSI B16.1 fittings shall be used only for nonstandard fittings not manufactured under AWWA C110/ANSI A21.10 or AWWA C153/ANSI A21.53.

1. Flanged: AWWA C110/ANSI A21.10 or AWWA C153/ANSI A21.53 faced and drilled 125-pound ANSI standard flanges; as manufactured by American Cast Iron Pipe Company, U.S. Pipe, or approved equal.
2. Grooved End: Ductile iron fittings in accordance with AWWA C110/ANSI A21.10 or AWWA C153/ANSI A21.53; rigid radius grooved ends in accordance with AWWA C606 for grooved and shouldered type joints; as manufactured by Victaulic Company, Anvil International, or approved equal.
3. Push-On: AWWA C110/ANSI A21.10 and AWWA C111/ANSI A21.11; Fastite Joint as manufactured by American Cast Iron Pipe Company, Tyton Joint as manufactured by U.S. Pipe, or approved equal.
4. Mechanical Joint: AWWA C110/ANSI A21.10 and AWWA C111/ANSI A21.11; as manufactured by American Cast Iron Pipe Company, U.S. Pipe, or approved equal.

2.4 PIPE AND FITTINGS INTERIOR LININGS AND EXTERIOR COATINGS

A. All pipe and fittings shall be ceramic epoxy lined and coated on the outside unless otherwise shown.

B. Interior Ceramic Epoxy Lining:

1. Lining shall be Protecto 401, Ceramapure PL90, or equal ceramic epoxy, in accordance with standards listed above.

C. Exterior Coating:

1. All buried piping shall be coated on the exterior as specified in Section 099600, HIGH PERFORMANCE COATINGS-WWTP.

2.5 FLANGES

A. Ductile iron, AWWA C115/ANSI A21.15, threaded, 250 psi working pressure, ANSI 125-pound drilling.

B. Grooved end pipe adapter flanges shall be malleable iron, ASTM A47, or ductile iron, ASTM A536, Victaulic Company, Anvil International, or equal.

2.6 GROOVED END COUPLINGS

A. Grooved end pipe couplings shall be malleable iron, ASTM A47, or ductile iron, ASTM A536, in accordance with AWWA C606; Victaulic Company Style 31, Anvil International, or equal.

2.7 BOLTS

A. For Class 125 FF Flanges:
   1. Exposed Dry Locations: Carbon steel, ASTM A307, Grade A hex head bolts and ASTM A563, Grade A hex head nuts.
   2. Submerged and Humid/Corrosive Locations: Type 316L stainless steel, ASTM F594, hex head bolts with minimum yield strength of 75,000 psi and Type 316L stainless steel, ASTM F594 hex head nuts.

B. For Class 250 RF Flanges:
   1. Exposed Dry Locations: Carbon steel, ASTM A 307, Grade B hex head bolts and ASTM A 563, Grade A heavy hex head nuts.
   2. Submerged and Humid/Corrosive Locations: Type 316L stainless steel, ASTM F594, hex head bolts with minimum yield strength of 75,000 psi and Type 316L stainless steel, ASTM F594 hex head nuts.

C. For Grooved End or Mechanical Joint: Manufacturer's standard for exposed dry locations and manufacturer's recommended stainless steel for humid and corrosive applications. Do not use grooved end or mechanical joint flanges in submerged applications.

2.8 GASKETS

A. Gaskets for push-on and mechanical joints shall be rubber, conforming to AWWA C111/ANSI A21.11.

B. Gaskets for flanged joints shall be 1/8-inch thick conforming to applicable parts of ANSI B16.21, AWWA C207, and NSF 61. Gasket material shall be free from corrosive alkali or acid ingredients and suitable for use in sewage or potable waterlines. Gaskets shall be full-face type, EPDM elastomer with cloth finish, Garlock Style 98206, or approved equal, for 125-pound FF flanges. Gaskets shall be flat ring type, made of synthetic fibers with a rubber binder or PTFE with glass microspheres, Garlock Style 3760-U or Style 3505, or approved equal, for 250-pound RF flanges.

C. Gaskets for grooved end joints shall be manufacturer's flush-seal type specifically designed for cast surfaces. Properties shall be as designated in ASTM D2000 for the required service. Dimensions shall conform to AWWA C606.

2.9 LUBRICANT

A. Lubricant for joints shall be manufacturer's standard.

PART 3 - EXECUTION

3.1 HANDLING PIPE

A. Care shall be taken not to damage the epoxy lining or exterior coating when handling the pipe.

B. Thoroughly clean pipe and fittings before installation.

3.2 CUTTING PIPE

A. As far as is practicable, all epoxy lined ductile iron pipe shall be furnished in the proper lengths and shall not require cutting. If cutting of the epoxy lined pipe is required in the field, it shall be done without damaging the pipe or interior lining, and shall leave a smooth end at right angles to the axis of the pipe.

B. Cut pipe with milling type cutter, rolling pipe cutter, or abrasive saw cutter. Do not flame cut. The cut end shall be cleaned and coated using epoxy repair material provided by the pipe manufacturer.

3.3 DRESSING CUT ENDS

A. Dress cut ends of pipe in accordance with the type of joint to be made.

B. Dress cut ends of buried pipe joints to remove sharp edges or projections which may damage the rubber gasket.

C. Dress cut ends of push-on joint pipe by beveling, as recommended by the pipe manufacturer.

D. Dress cut ends of pipe for flexible couplings, flanged coupling adapters, and grooved end pipe couplings as recommended by the coupling or adapter manufacturer.

3.4 FABRICATION OF FLANGED PIPE

A. Flanged pipe shall be fabricated in the shop, not in the field, and delivered to the jobsite with flanges in place and properly faced. Threaded flanges shall be individually fitted and machine tightened on matching threaded pipe by manufacturer. Flanges shall be faced after fabrication in accordance with AWWA C115/ANSI A21.15. A sufficient number (at least 10 percent) of selected flange-to-pipe threaded joints shall be hydrostatically shop tested to ensure joint integrity.

3.5 JOINING PIPE

A. Flanged: Prior to connecting flanged pipe, the faces of the flanges shall be thoroughly cleaned of all oil, grease, and foreign material. The rubber gaskets shall be checked for proper fit and thoroughly cleaned. Care shall be taken to assure proper seating of the flange gasket. Bolts shall be tightened so that the pressure on the gasket is uniform. Torque-limiting wrenches shall be used to ensure uniform bearing insofar as possible. If joints leak when the hydrostatic test is applied, the gaskets shall be removed and reset and bolts retightened.

B. Grooved End: Installation shall be in accordance with the manufacturer’s printed instructions.

C. Push-On and Mechanical Joint: Join pipe with push-on or mechanical type joints in accordance with the manufacturer’s recommendations. Provide all special tools and devices, such as special jacks, chokers, and similar items required for proper installation. Lubricant for the pipe gaskets shall be furnished by the pipe manufacturer, and no substitutes shall be permitted under any circumstances.

3.6 TESTING

A. All pipelines shall be hydrostatically tested at the pressures listed in Section 400205, PIPING SCHEDULE. Test procedures shall be as specified in Section 400510, PIPING - GENERAL. The Contractor shall be responsible for proper coordination of all pipe, fittings, and other accessories so that all lines are designed to handle the test pressures specified.

3.7 CORROSION PROTECTION

A. As specified in Section 400510, PIPING – GENERAL-WWTP.

3.8 SUPPORTS AND HANGERS

A. As specified in Section 400510, PIPING – GENERAL-WWTP.

END OF SECTION

SECTION 400510.04 – DPS – MILL TYPE STEEL PIPE AND FITTINGS (GENERAL SERVICE) – WWTP

PART 1 - GENERAL

1.1 SECTION INCLUDES

A. Work necessary to furnish and install the mill type steel general service plant piping, complete, and as specified further in Section 400205, PIPING - GENERAL-WWTP.

1.2 CODE REQUIREMENTS

A. Meet the requirements of the ANSI Codes for Pressure Piping B31.1, Power Piping, and B31.3, Chemical Plant and Petroleum Refinery Piping, hereinafter referred to as the Piping Code.

1.3 SUBMITTALS

A. Welding Procedure Specifications and Qualifications: Prior to the start of work submit the following:
   1. List of the welders or welding operators proposed and type of welding for which each individual has been qualified.
   2. Procedure Specifications and qualification records of welding procedures for pipe and associated structural welding to be performed under this section, in accordance with Section IX of the ASME Boiler and Pressure Vessel Code.

PART 2 - PRODUCTS

2.1 PIPE

A. General: Black carbon steel meeting the requirements of ASTM A53, Grade B seamless or electric resistance welded, except piping 1-1/2-inch and smaller shall be ASTM A106, Grade B.

B. Screwed, Butt-Welded, and Flanged Pipe Wall Thickness:
   1. 1-1/4-Inch and Smaller: Schedule 80.
   2. 1-1/2-Inch Through 6-Inch: Schedule 40.
   3. 8-Inch and Larger: Schedule 30.

2.2 JOINTS

A. Butt-welded, flanged, or screwed, as follows:
   1. 2-Inch and Smaller: Screwed.
   2. 2-1/2-Inch and Larger: Butt-welded or flanged at valves and equipment, unless otherwise shown.

2.3 FITTINGS

A. 2-Inch and Smaller:
   1. Screwed, 150-pound malleable iron, black, ASTM A197 or ASTM A47, with dimensions meeting the requirements of ANSI B16.3.
   2. Unions: 300-pound malleable iron, black, ASTM A197 or ASTM A47, with dimensions meeting the requirements of ANSI B16.3, and a brass-to-iron seat.

B. 2-1/2-Inch and Larger:
   1. Butt-Welding Type: Carbon steel, to match pipe wall thickness, ASTM A234, Grade WPB, meeting the requirements of ANSI B16.9. All elbows shall be Short Radius, unless otherwise designated. Fitting wall thickness shall match adjoining pipe.

2. Flanged: As required to connect steel piping to fittings and equipment, and as specified in Article FLANGES herein.

2.4 BRANCH CONNECTIONS

A. 2-Inch and Smaller:
   1. Screwed, straight, or reducing tees as specified under Article FITTINGS.
   2. 2,000- or 3,000-pound WOG forged carbon steel, ASTM A105 Grade II, commercial welding branch fittings with threaded outlet as manufactured by:
      a. Bonney Forge Corporation, Mount Union, PA.
      b. Allied Piping Products Pa, Inc., Oaks, PA.
      c. Or approved equal.

B. 2-1/2-Inch and Larger:
   1. Straight or reducing tees, as specified under Article FITTINGS.
   2. Standard weight forged steel, ASTM A105, Grade II, commercial welding branch fittings with butt-welding outlet as manufactured by:
      a. Bonney Forge Corporation, Mount Union, PA.
      b. Allied Piping Products Pa, Inc., Oaks, PA.
      c. Or approved equal.
      d. Or fabricate from pipe.
   3. Use tee for branch outlet full size of run or one size reduced.

2.5 FLANGES

A. Forged Steel, ASTM A181, Class 60, slip-on or welded neck type, faced and drilled 150-pound, 1/16-inch raised face, ANSI B16.5 Standard, or AWWA C207, Class D hub, faced and drilled 125-pound flat-face, ANSI B16.1 Standard.

B. Welding Neck Flanges: Provide when abutting butt-weld fittings. Welding neck bore shall match pipe inside diameter.

C. Flat Face Flange Mating: Machine off the raised face of steel flange when mating with a cast iron flat faced flange.

2.6 COUPLINGS

A. Screwed Pipe: Malleable iron, ASTM A197 or ASTM A47, with dimensions meeting the requirements of ANSI B16.3.

2.7 BOLTING

A. 150-Pound RF Flanges: Carbon steel, ASTM A307, Grade A hex head bolts and ASTM A563, Grade A hex head nuts.

B. 125-Pound FF AWWA Class D Flanges: Carbon steel, ASTM A307, Grade A hex head bolts and ASTM A563, Grade A hex head nuts.

C. When mating flange on equipment is ductile or cast iron and gasket is flat ring type, provide ASTM A307, Grade B square head bolts and ASTM A563, Grade A heavy hex head nuts.

D. 1/8-inch Undersize Bolting Material For Steel Insulating Flanges: ASTM A193, Grade B7 alloy stud bolts and ASTM A194, Grade 2H carbon steel heavy hex nuts.

2.8 GASKETS

A. Flanged Joints for General Service:
   1. 150-Pound RF Flanges: 1/16-inch thick compressed non-asbestos composition flat ring type.

2. 125-Pound FF Flanges: 1/16-inch thick compressed non-asbestos composition full face type.
3. Use full-face type ring when 150-pound flange mates with a 125-pound cast iron flange.
4. Manufacturers:
   a. Garlock Blue-Gard Style 3000.
   b. Johns Mansville Clipper Style 978-C.
   c. Or equal.

B. Flanged Joints for Potable and Non-Potable Water Service:
1. 150-Pound RF Flanges: 1/8-inch thick flat ring type, made of synthetic fibers with a rubber binder or PTFE with glass microspheres, Garlock Style 3760-U or Style 3505, or approved equal, meeting the requirements of ANSI B16.21, AWWA C207, and NSF 61.
2. 125-Pound FF Flanges: 1/8-inch thick full-face type, EPDM elastomer with cloth finish, Garlock Style 98206, or approved equal, meeting the requirements of ANSI B16.21, AWWA C207, and NSF 61.
3. Provide gasket materials free from corrosive alkali or acid ingredients and suitable for use in non-potable and potable water services.

2.9 THREAD LUBRICANT

A. Provide Teflon tape as thread lubricant.

2.10 WELDING ROD AND BARE ELECTRODES

A. Meet the requirements of the welding procedure specifications and qualifications as specified in Article WELDING herein.

PART 3 - EXECUTION

3.1 WELDING

A. Piping and Structural Attachments to Piping: In accordance with latest editions of Section IX, ASME Boiler and Pressure Vessel Code and the Piping Code.

B. Welding Procedure Specifications:
1. Qualify all welding procedure specifications prior to fabrication in accordance with the ASME Boiler and Pressure Vessel Code, Section IX and the Piping Code.
2. Identify all welding procedure specifications by number and reference the procedure number on all fabrication Drawings.
3. Submit qualified welding procedure specifications in accordance with Section 013300, SUBMITTAL PROCEDURES.

C. Welding and Welding Operators:
1. Qualify all welders and welding operators prior to fabrication in accordance with the ASME Boiler and Pressure Vessel Code, Section IX and the Piping Code.
2. Include qualifications for all welding positions to be employed in the fabrication.
3. Make qualification records available for review by the Engineer and Owner.

D. Materials:
1. Use welding products within the limits recommended by their manufacturers.
2. Keep electrodes, filler wires, and fluxes clean, dry, and properly stored according to manufacturer's recommendations. Do not use electrodes, filler wires, or fluxes that are damp, greasy, or oxidized.
3. Do not use backing rings.

4. Consumable inserts may be used if included in the qualified welding procedure specification. Match the chemistry of the consumable insert with the base metal and weld metal chemistry.

E. Weld Identification:
1. Assign each qualified welder or welding operator an individual identification number or symbol.
2. Permanently mark each pressure weld with the identification of the welder or welding operator who performed the weld. If more than one welder or welding operator welds a joint, each shall apply their identification in a manner to indicate the part of the weld they completed.

F. Procedure:
1. Clean surfaces to be welded free of paint, oil, dirt, scale, oxides, and other material detrimental to welding. Clean in a manner that will not lead to contamination of the weld or adjoining base metal.
2. No welding shall be performed if there is any rain, snow, sleet, or high wind in contact with weld area or if ambient temperature is below 32 degrees F.
3. If ambient temperature is less than 32 degrees F, local preheating to a temperature warm to the hand is required.
4. Tack Welds:
   a. Remove if not made by a qualified welder using the same procedure as for the completed weld.
   b. If not removed, make tack weld with an electrode the same as, or equivalent to, the electrode to be used for first weld pass.
   c. Remove cracked tack welds.
5. Clean each layer of deposited weld metal with a power-driven wire brush, prior to depositing each subsequent layer of weld metal, including final pass.
6. Chip or grind out surface defects which will affect soundness of the weld.
7. Weld Passes:
   a. 6-inch and Larger Pipe: Minimum of three weld passes using the specified covered electrode.
   b. 4-inch and Smaller Pipe: Minimum of a full root and second pass.
8. Welds: Free of cracks, incomplete penetration, weld undercutting, excessive weld reinforcement, porosity, slag inclusions, and other defects in excess of limits prescribed in the Piping Code.
9. Branch Connections: Fit and groove-weld in accordance with details described and shown in the Piping Code.

3.2 FABRICATION

A. End Preparation:
1. Machine shaping of pipe ends is the preferred method.
2. Oxygen or arc cutting is acceptable only if the cut is smooth and true and all slag is removed either by chipping or grinding.
3. Beveled Ends for Butt Welding: Meet the requirements of ANSI B16.25.

B. Cleaning: After completion of shop or field fabrication and after erection, clean all piping inside and outside to remove all loose scale, weld spatter, dirt, loose debris, and foreign material.

C. Alignment and Spacing:
   1. Align ends to be joined within commercial tolerances on diameters, wall thicknesses, and out-of-roundness.
   2. Root Opening of Joint: As stated in welding procedure specification.

3.3 EXAMINATION, INSPECTION, AND TESTING

A. Required Examinations:
   1. Perform examinations in accordance with the Piping Code. Twenty-five percent of the circumferential butt welds shall be random examined.
   2. Perform examinations for every pipe thickness and for each welding procedure, progressively, for all piping covered by this section.
   3. Examine at least one of each type and position of weld made by each welder or welding operator.
   4. For each weld found to be defective under the acceptance standards or limitations on imperfections contained in the Piping Code, examine two additional welds made by the same welder that produced the defective weld. Such additional examinations are in addition to the minimum required above. Examine, progressively, two additional welds for each tracer examination found to be unsatisfactory.

B. Inspection: Provide access to the Owner and Engineer for inspection of all shop and fieldwork and review of all records of examinations.

C. Pressure Tests:
   1. Piping: Test at the pressure listed in Section 400205, PIPING SCHEDULE-WWTP in accordance with the Piping Code.
   2. Piping Pressure Test Procedures: As specified in Section 400510, PIPING - GENERAL-WWTP.

3.4 SUPPORTS AND HANGERS

A. As specified in Section 400510, PIPING - GENERAL-WWTP.

3.5 CORROSION PROTECTION

A. As specified in Section 400510, PIPING - GENERAL-WWTP.

B. Mill type steel pipe shall not be buried.

END OF SECTION

400510.09 - DPS STAINLESS STEEL PIPE AND FITTINGS – WWTP

PART 1 - GENERAL

1.1 SECTION INCLUDES

A. Work necessary to furnish and install, complete, the stainless steel plant pipe and fittings specified herein and as specified further in Section 400510, PIPING -GENERAL-WWTP.

1.2 GENERAL

A. See Section 400510, PIPING - GENERAL-WWTP for additional requirements.

PART 2 - PRODUCTS

2.1 GENERAL SERVICE PIPE AND FITTINGS

A. Pipe: Stainless steel, pickled and passivated, ASTM A778, Type (TP) 316L , "as welded" grade, unless otherwise specified hereinafter.
   1. 2-1/2-inch and Smaller: ASTM A312, TP316, Schedule 40S, seamless.
   2. 3-Inch through 8-Inch: Schedule 10S.
   3. 10-Inch and Larger: Schedule 5S.

B. Joints
   1. 2-1/2-Inch and Smaller: Screwed.
   2. 3-Inch and Larger: Butt welded or flanged.

C. Fittings
   1. 2-1/2-Inch and Smaller: Screwed, stainless steel, rated 1,000 pound CWP, forgings conforming to ASTM A182, Grade F316 or barstock to ASTM A276, Type 316, dimensions conforming to ANSI B16.3, standard for 150-pound SWP malleable iron screwed fittings.
   2. 3-Inch and Larger: Butt welding type, stainless steel, pickled and passivated, schedule to match piping, ASTM A774, Type 316L, conforming to MSS SP-43; "as welded" grade; all ells long radius, unless otherwise designated.

D. Branch Connections:
   1. 2-1/2-Inch and Smaller: Screwed tees as specified under Article FITTINGS, or 3,000-pound WOG forged stainless steel, ASTM A182, Grade 316L commercial welding branch fittings with threaded outlet, as manufactured by Bonney Forge Corporation, Mount Union, PA; Allied Piping Products Pa. Inc., Oaks, PA; or equal.
   2. 3-Inch and Larger: Tees or reducing tees as specified under Article FITTINGS.

E. Flanges:
   1. Submerged Below the Overflow Level of Hydraulic Structures and Inside Digesters: Forged stainless steel, ASTM A182, Grade F316L, slip-on type, faced and drilled 150-pound, 1/16-inch raised face, ANSI B16.5 standard.
   2. All Other Exposed Applications: Cast steel backing flanges, ASTM A216, Grade WCA, Van Stone type, drilled 125-pound, ANSI B16.1 standard.

F. Stub Ends: Stainless steel, ASTM A240, Type 316L, as welded grade, conforming to MSS-SP43, or flared nipples, schedule to match pipe.

G. Bolting:
   1. Submerged Below the Overflow Level of Hydraulic Structures and Inside Digesters: Bolts shall be ASTM F594, Type 316 stainless steel with minimum yield strength of 75,000 psi. Bolts shall have hex heads in accordance with ASME B18.2.1. Nuts shall be ASTM F594, Type 316 stainless steel with hex heads in accordance with ASME B18.2.2.
   2. All Other Exposed Applications: Carbon steel, ASTM A307, Grade A hex head bolts and ASTM A563, Grade A hex head nuts.

3. When mating flange on valve, equipment, or adjoining pipe is a dissimilar metal, use ASTM A307, Grade B, square head bolts and ASTM A563, Grade A heavy hex head nuts with insulating flange.

H. Gaskets: Gaskets for flanged joints shall be 1/8-inch thick conforming to applicable parts of ANSI B16.21, AWWA C207, and NSF 61. Gasket material shall be free from corrosive alkali or acid ingredients and suitable for use in sewage or potable waterlines, or for use with hot air up to 250 degrees F. Gaskets shall be full-face type, EPDM elastomer with cloth finish, Garlock Style 98206, or approved equal, for 125-pound FF flanges. Gaskets shall be flat ring type, made of synthetic fibers with a rubber binder or PTFE with glass microspheres, Garlock Style 3760-U or Style 3505, or approved equal, for 150-pound RF flanges.

I. Thread Lubricant: Teflon tape.

J. Covered Welding Electrodes: For Shielded Metal Arc Process Type 316L Pipe, AWS 5.4, E 316L.

K. Welding Rod and Bare Electrodes: For Gas Tungsten Arc or Gas Metal Arc Processes, Type 316L Pipe, AWS 5.9, ER 316L.

PART 3 - EXECUTION

3.1 WELDING

A. In accordance with latest editions of Section IX, ASME Boiler and Pressure Vessel Code and the American National Standard Code for Pressure Piping, ANSI B31.2 and B31.3, as applicable.

3.2 WELDING PROCEDURE QUALIFICATIONS

A. Furnish Engineer for prior review, procedure specifications and qualification records of welding procedures for all pipe welding to be performed under this section, in accordance with Section IX, Article II of the ASME Boiler and Pressure Vessel Code.

3.3 WELDING PERFORMANCE QUALIFICATIONS

A. All welders and welding operators shall be qualified at the Contractor's sole expense by an ASME-approved testing laboratory before performing any welding under this section. Qualification test shall be in accordance with Section IX, Article III of the ASME Boiler and Pressure Vessel Code. Welders and welding operators shall be qualified for making groove welds in Type 316 and 316L stainless steel pipe in position 6g for each welding process to be used.

B. Prior to the start of the work, Contractor shall submit a list of the welders he proposes using and the type of welding for which each has been qualified.

C. Qualification test may be waived if evidence of prior qualification is deemed suitable by the Engineer. Contractor shall retest any welders at any time Engineer considers the quality of the welder's work substandard. When Engineer requests the retest of a previously qualified welder, the labor costs for the retest will be at the Owner's expense if the welder successfully passes the test; then, the following procedure shall take place: The Contractor, Contracting Officer and Contracting Officer Representative shall be notified by Engineer in writing within a reasonable time. The Contractor shall notify the Contracting Officer and Contracting Officer Representative of the costs incurred and submit in writing utilizing the request for equitable adjustment procedures outlined in the contract clause. If the welder fails the retest, all costs shall be at the Contractor's expense

3.4 IDENTIFICATION OF WELDS

A. Each weld shall be marked with a symbol which identifies the person who made the weld.

3.5 FABRICATION AND INSTALLATION

A. Wrenches, brushes, slings, and other tools used on stainless steel pipe shall be stainless steel or nonferric materials. Do not use mild steel.

B. Weld End Preparation: Pipe edges shall be prepared preferably by machine shaping or cutting with an aluminum oxide blade. Oxygen or arc cutting are acceptable only if the cut is reasonably smooth and true and all slag is removed either by chipping or grinding. Beveled ends for butt welding shall conform to ANSI B16.25.

C. Screwed joints shall be made with fitting threads and pipe threads accurately conforming to the requirements of ANSI B2.1 for standard taper pipe threads. The Contractor shall use clean and sharp dies to provide an accurate thread profile, free of ridges and burrs. Back-welding of joints will not be permitted to remedy joints failing pressure tests. Joints failing the pressure test shall be replaced with a screwed joint which passes the test.

D. Compression type fittings shall be installed in accordance with manufacturer's instructions.

E. Cleaning: Surfaces shall be clean and free of paint, oil, rust, scale, slag, or other material detrimental to welding. Prior to welding, wire brush joints to be welded with stainless steel wire brushes or stainless steel wool. Prevent the destruction of the corrosion resistant passive film on stainless steel piping surfaces. Prevent contact of stainless steel piping surfaces with carbon steel and iron filings from such devices as threading machines, grinding wheels, files and any other contamination source.

F. Alignment and Spacing: Align ends to be joined within existing commercial tolerances on diameters, wall thicknesses, and out-of-roundness. Root opening of the joint shall be as stated in the procedure specification.

G. Procedure:
   1. The direct current, reverse polarity, shielded metal arc or gas metal arc processes or direct current, straight polarity, gas tungsten-arc process shall be used for all field welding. Shop fabrication shall be in accordance with the submitted welding procedure qualifications.
   2. No welding shall be performed if there is impingement of any rain, snow, sleet, or high wind on the weld area, or if the ambient temperature is below 32 degrees F. If the ambient is less than 32 degrees F, local preheating to a temperature warm to the hand is required.
   3. Tack welds shall be thoroughly cleaned to avoid porosity or pin-holing in the cover pass and shall be small enough to be readily fused into the succeeding bead.
   4. Tack welds, if not made by a qualified welder using the same procedure as for the completed weld, must be completely removed. Tack welds which are removed shall be made with an electrode that is the same as, or equivalent, to, the electrode to be used for the first weld pass. Tack welds which have cracked shall be removed.
   5. Each layer of deposited weld metal shall be thoroughly cleaned prior to the deposition of each additional layer of weld metal, including the final pass, with a power-driven stainless steel wire brush. Surface defects which will affect the soundness of weld shall be chipped out or ground out.
   6. Welds shall be free of cracks, incomplete penetration, weld undercutting, excessive weld reinforcement, porosity, slag inclusions and other defects in excess of the limits prescribed in Chapter V of ANSI B31.2 and B31.3, as applicable.
   7. Branch connections shall be fitted and groove-welded in accordance with the details described and shown in Chapter V of ANSI B31.2 and B31.3 as applicable.

H. Testing: All lines shall be tested at the pressures listed in Section 400205, PIPING SCHEDULE-WWTP. Test procedures shall be as specified in Section 400510, PIPING GENERAL-WWTP.

I. Supports and Hangers:

1. All hanger-pipe contact surfaces shall have a dielectric barrier consisting of neoprene rubber wrapping or plastic coated hangers. Hangers shall be as specified in Section 400510, PIPING - GENERAL-WWTP, except spacing shall be as follows:

Pipe Size	Maximum Support/Hanger Span	Minimum Rod Size Single Rod Hanger
1-inch & Smaller	6 feet	1/4-inch
1-1/2-inch through 4-inch	8 feet	3/8-inch
6-inch	8 feet	1/2-inch
8-inch and 10-inch	10 feet	5/8-inch
12-inch	10 feet	3/4-inch

2. The load rating of universal concrete inserts shall not be less than that of the hanger rods they support.

END OF SECTION

SECTION 400510.12 – DPS- POLYVINYL CHLORIDE (PVC) PIPE AND FITTINGS – WWTP

PART 1 - GENERAL

1.1 SECTION INCLUDES

A. Work necessary to furnish and install, complete, the polyvinyl chloride (PVC) pipe and fittings specified herein, and as specified further in Section 400510, PIPING - GENERAL-WWTP.

1.2 GENERAL

A. See Section 400510, PIPING – GENERAL-WWTP, for additional requirements. All PVC piping components shall be the products of one manufacturer.

PART 2 - PRODUCTS

2.1 PIPE

A. PVC, Schedule 80 or Schedule 40, Type I, Grade 1, or Class 12454-B, conforming to ASTM D1784 and ASTM D1785. Provide Schedule 80 pipe where specified in Section 400205, PIPING SCHEDULE-WWTP and where PVC pipe is threaded.

2.2 NIPPLES

A. Same as pipe except any threaded nipples shall be Schedule 80.

2.3 JOINTS

A. Socket-weld, except where connecting to unions, valves, and equipment with threaded connections that may require future disassembly.

2.4 FITTINGS

A. Schedule 80, as specified under Article PIPE hereinbefore. Fittings shall conform to the requirements of ASTM D2467 for socket type and ASTM D2464 for threaded type.

B. Where Schedule 40 pipe is allowed, fittings shall be Schedule 40, as specified under Article PIPE hereinbefore. Fittings shall conform to the requirements of ASTM D2466 for socket type and ASTM D2464 for threaded type.

2.5 FLANGES

A. One piece, molded hub type flat faced flanges, 125-pound standard, as specified under Article FITTINGS hereinbefore.

2.6 GASKETS

A. Full-faced, 1/8-inch thick, fabricated from ethylene propylene diene monomer rubber (EPDM) or a blend of fluoroelastomers (FKM) complying with ASME B16.21 and NSF 61.

B. When mating flange has raised face, use flat ring gasket and provide filler gasket between OD of raised face and flange OD to protect PVC flange from bolting moment.

2.7 EXPANSION JOINTS

A. See 400510, PIPING – GENERAL-WWTP.

2.8 BOLTING FOR EXPOSED APPLICATIONS

A. With Flat Ring Gaskets: Carbon steel, ASTM A307, Grade B square head bolts and ASTM A563, Grade A heavy hex head nuts.

B. With Full Face Gaskets or in Corrosive Areas: Type 316 stainless steel, ASTM A193, Grade B8M hex head bolts and ASTM A194, Grade 8M hex head nuts.

1. Bolts shall be fabricated in accordance with ANSI B18.2 and provided with washers of the same material as bolts.

2.9 SOLVENT CEMENT

A. All socket connections shall be joined with an industrial grade CPVC solvent cement conforming to ASTM F493 and NSF/ANSI 61, suitable for water, wastewater and chemical solution applications. Primer shall comply with ASTM F656. Manufacture and viscosity shall be as recommended by the pipe and fitting manufacturer to assure compatibility. Primer shall be Weld-On P-70 and cement shall be Weld-On 724 CPVC, or approved equal.

2.10 THREAD LUBRICANT

A. Teflon tape.

PART 3 - EXECUTION

3.1 GENERAL

A. All rigid PVC pipe shall be cut, made up, and installed in accordance with the pipe manufacturer's recommendations. Plastic PVC pipe shall be laid by snaking the pipe from one side of the trench to the other for direct bury and the offset shall be as recommended by the manufacturer for the maximum temperature variation between time of solvent welding and during operation. PVC pipe shall be properly supported where exposed as shown on the Drawings and as specified in Section 400510, PIPING – GENERAL-WWTP.

B. Use Schedule 80 threaded nipple where necessary to connect to threaded valve or fitting. Schedule 40 pipe shall not be threaded.

C. Only strap wrenches shall be used for tightening threaded plastic joints, and care shall be taken not to overtighten these fittings. Pipe shall not be laid when the temperature is below 40 degrees F, nor above 90 degrees F when exposed to direct sunlight. Ends to be joined shall be shielded from direct sunlight prior to and during the laying operation.

D. PVC piping shall be installed with unions as necessary for removal of valves and fittings for future maintenance.

E. Provide adequate ventilation when working with pipe joint solvent cement. Cleaning with primer shall be done in accordance with ASTM F402 and joining with solvent cement shall be done in accordance with ASTM D2855.

F. Field cuts of PVC pipe shall be done according to the pipe manufacturer’s recommendations. Ream cut pipe ends to remove burrs and bevel plain-end pipe. Thoroughly clean pipe and fittings before installation to remove all foreign substances. Installation shall comply with ASME B31.3.

G. Provide expansion provisions as specified in Section 400510, PIPING – GENERAL-WWTP to compensate for pipe expansion due to temperature differences.

3.2 TESTING

A. All lines shall be hydrostatically tested at the pressures listed in Section 400205, PIPING SCHEDULE-WWTP. Test procedures shall be as specified in Section 400510, PIPING – GENERAL-WWTP.

3.3 SUPPORTS AND HANGERS

A. In accordance with the manufacturer's recommendations.

END OF SECTION

SECTION 400510.13 - DPS – CHLORINATED POLYVINYL CHLORIDE (CPVC) PIPE AND FITTINGS – WWTP

PART 1 - GENERAL

1.1 SECTION INCLUDES

A. Work necessary to furnish and install, complete, the chlorinated polyvinyl chloride (CPVC) pipe and fittings specified herein, and as specified further in Section 400510, PIPING -GENERAL-WWTP.

1.2 GENERAL

A. See Section 400510, PIPING – GENERAL-WWTP, for additional requirements. All CPVC piping components shall be the products of one manufacturer.

PART 2 - PRODUCTS

2.1 PIPE

A. CPVC, Schedule 80, Type IV, Grade 1, or Class 23447-B, conforming to ASTM D1784 and ASTM F441.

2.2 NIPPLES

A. Same as pipe.

2.3 JOINTS

A. Socket-weld, except where connecting to unions, valves, and equipment with threaded connections that may require future disassembly.

2.4 FITTINGS

A. Schedule 80, as specified under Article PIPE hereinbefore. Fittings shall conform to the requirements of ASTM F439 for socket type and ASTM F437 for threaded type.

2.5 FLANGES

A. One piece, molded hub type flat faced flanges, 125-pound standard, as specified under Article FITTINGS hereinbefore.

2.6 GASKETS

A. Full-faced, 1/8-inch thick, fabricated from ethylene propylene dienne monomer rubber (EPDM) or a blend of fluoroelastomers (FKM) complying with ASTM B16.21 and NSF 61.

B. When mating flange has raised face, use flat ring gasket and provide filler gasket between OD of raised face and flange OD to protect CPVC flange from bolting moment.

2.7 EXPANSION JOINTS

A. See 400510, PIPING – GENERAL-WWTP.

2.8 BOLTING FOR EXPOSED APPLICATIONS

A. With Flat Ring Gaskets: Carbon steel, ASTM A307, Grade B square head bolts and ASTM A563, Grade A heavy hex head nuts.

B. With Full Face Gaskets or in Corrosive Areas: Type 316 stainless steel, ASTM A193, Grade B8M hex head bolts and ASTM A194, Grade 8M hex head nuts.
   1. Bolts shall be fabricated in accordance with ANSI B18.2 and provided with washers of the same material as bolts.

2.9 SOLVENT CEMENT

A. All socket connections shall be joined with an industrial grade CPVC solvent cement conforming to ASTM F493 and NSF/ANSI 61, suitable for water, wastewater and chemical solution applications. Primer shall comply with ASTM F656. Manufacture and viscosity shall be as recommended by the pipe and fitting manufacturer to assure compatibility. Primer shall be Weld-On P-70 and cement shall be Weld-On 724 CPVC, or approved equal.

2.10 THREAD LUBRICANT

A. Teflon tape.

PART 3 - EXECUTION

3.1 GENERAL

A. All rigid CPVC pipe shall be cut, made up, and installed in accordance with the pipe manufacturer's recommendations. Plastic CPVC pipe shall be laid by snaking the pipe from one side of the trench to the other. Offset shall be as recommended by the manufacturer for the maximum temperature variation between time of solvent welding and during operation. CPVC pipe shall be properly supported where exposed as shown on the Drawings and as specified in Section 400510, PIPING – GENERAL-WWTP.

B. Use Schedule 80 threaded nipple where necessary to connect to threaded valve or fitting.

C. Only strap wrenches shall be used for tightening threaded plastic joints, and care shall be taken not to overtighten these fittings. Pipe shall not be laid when the temperature is below 40 degrees F, nor above 90 degrees F when exposed to direct sunlight. Ends to be joined shall be shielded from direct sunlight prior to and during the laying operation.

D. CPVC piping shall be installed with unions as necessary for removal of valves and fittings for future maintenance.

E. Provide adequate ventilation when working with pipe joint solvent cement. Cleaning with primer shall be done in accordance with ASTM F402 and joining with solvent cement shall be done in accordance with ASTM D2855.

F. Field cuts of CPVC pipe shall be done according to the pipe manufacturer’s recommendations. Ream cut pipe ends to remove burrs and bevel plain-end pipe. Thoroughly clean pipe and fittings before installation to remove all foreign substances. Installation shall comply with ASME B31.3.

G. Provide expansion provisions as specified in Section 400510, PIPING – GENERAL-WWTP to compensate for pipe expansion due to temperature differences.

3.2 TESTING

A. All lines shall be hydrostatically tested at the pressures listed in Section 400205, PIPING SCHEDULE-WWTP. Test procedures shall be as specified in Section 400510, PIPING – GENERAL-WWTP.

3.3 SUPPORTS AND HANGERS

A. In accordance with the manufacturer's recommendations.

END OF SECTION

SECTION 400510.30 DPH – HIGH DENSITY POLYETHYLENE (HDPE) PIPE AND TUBING – WWTP

PART 1 - GENERAL

1.1 WORK INCLUDED

A. This section covers the work necessary to furnish and install, complete, the high density polyethylene (HDPE) pipe and fittings specified herein, and as specified further in Section 400510, PIPING-GENERAL-WWTP.

1.2 GENERAL

A. See Section 400510, PIPING-GENERAL-WWTP for additional requirements. All piping system components shall be the products of one manufacturer.

1.3 SUBMITTALS DURING CONSTRUCTION

A. Submittals during construction shall be made in accordance with Section 013300, SUBMITTAL PROCEDURESS in Division 01, GENERAL REQUIREMENTS. In addition, the following specific information shall be provided:
   1. A statement, in writing, from the pipe manufacturer that it is listed with the Plastic Pipe Institute as a qualified extruder for the polyethylene resin being used to manufacture the pipe for this project.
   2. Catalog information confirming that the pipe and fittings conform to the requirements of PART 2 PRODUCTS of this Specification.

1.4 DEFINITIONS

A. Dimension Ratio (DR): The ratio of the pipe outside diameter to its specified minimum wall thickness.

B. Hydrostatic Design Basis (HDB): The categorized long-term strength in the circumferential or hoop direction as determined by PPI TR-3 and ASTM 2837.

C. Hydrostatic Design Stress (HDS): The maximum allowable working hoop stress in the pipe wall when the pipe is subjected to sustained long-term hydrostatic pressure. HDS is equal to HDB x 0.5, for water applications.

D. Standard Dimension Ratio (SDR): A dimension ratio that corresponds to a number in a standard series of preferred dimension ratios established by ASTM F412.

PART 2 - PRODUCTS

2.1 REFERENCES

A. The following documents are a part of this section. Where this Specification section differs from these documents, the requirements of this section shall apply.
   1. ASTM D 3350: Standard Specification for Polyethylene Plastics Pipe and Fittings Materials.
   2. ASTM D 2239: Standard Specification for Polyethylene (PE) Plastic Pipe (SIDR-PR) Based On Controlled Outside Diameter.
   3. ASTM D 3035: Polyethylene (PE) Plastic Pipe (SDR-PR) Based On Controlled Outside Diameter (IPS pipe sizes less than 4 inches).
   4. ASTM F 714: Polyethylene (PE) Plastic Pipe (SDR-PR) Based On Outside Diameter (IPS pipe sizes 4 inches and larger).

5. ASTM D2837: Standard Test Method for Obtaining Hydrostatic Design Basis for Thermoplastic Pipe Materials or Pressure Design Basis for Thermoplastic Pipe Products
6. AWWA C901: Polyethylene (PE) Pressure Pipe and Fittings, ½ inch Through 3 inch, for Water Distribution.
7. AWWA C906: Polyethylene (PE) Pressure Pipe and Fittings, 4 inch Through 63 inch, for Water Distribution.

2.2 PIPE

A. The pipe shall be extruded from an extra high molecular weight, high density polyethylene compound and shall conform to the following requirements:
   1. The polyethylene resin shall meet or exceed the requirements of ASTM D 3350 for PE 4710 resin materials with a cell classification of 445574C/E, or better. For chemical services, a polyethylene cell classification of 445584C shall be used.
   2. For exposed applications, the polyethylene compound shall be suitably protected against degradation by ultraviolet light by means of carbon black, well dispersed by pre-compounding in a concentration of not less than 2 percent (cell classification letter C).
   3. The minimum Hydrostatic Design Basis (HDB) of the pipe product shall be 1600 psi at 73 degrees F, as determined in accordance with ASTM D 2837.
   4. The polyethylene pipe manufacturer shall provide certification that stress regression testing has been performed on the specific product. The certification shall include a stress life curve per ASTM D 2837. The stress regression testing shall have been done in accordance with ASTM D 2837.
   5. Materials shall be listed with the name of the pipe and fitting manufacturer in the latest edition of Plastic Pipe Institute (PPI) TR-4, PPI Listing of Ratings for Thermoplastic Piping Materials or Pipe. The material shall also be approved for potable water in accordance with NSF/ANSI 61.
   6. Manufacturer's certification shall state that the pipe was manufactured from one specific resin in compliance with these specifications. The certificate shall state the specific resin used, its sources, and list its compliance to these specifications.
   7. The pipe shall contain no recycled compound except that generated in the manufacturer's own plant from resin of the same specification and from the same raw material supplier.
   8. The pipe shall be extruded using a melt homogenizing / plasticating extruder and "appropriate" die. The extruder screw design should be customized for the HDPE being processed. The extruded tubular melt shall be vacuum or pressure sized in downstream cooling tanks to form round pipe to specification diameter and wall thickness per AWWA C901 and C906.
   9. Pipe shall be produced from materials in compliance with the Safe Drinking Water Act.

B. Small diameter pipe and tubing (1/2-inch to 3-inch) shall be manufactured in accordance with AWWA C901 and ASTM D 3035, with Iron Pipe Size (IPS) outside diameters. Unless noted otherwise on the Drawings or in Section 400205, PIPING SCHEDULE-WWTP, smaller diameter pipe shall have a minimum design working pressure of 200 psi and a maximum DR of 11.0.

C. Pipe shall be marked in accordance with ASTM F 714 and/or AWWA C906, as appropriate for pipe size and IPS or DIPS designation. Marking shall indicate the pipe's

pressure rating or pressure class and the DR, at a minimum.

D. HDPE pipe shall be as manufactured by Performance Pipe, a Division of Chevron Phillips Chemical Company; JM Eagle; Asahi-America; or equal.

2.3 FITTINGS

A. Polyethylene fittings shall be molded or fabricated by an approved manufacturer. All polyethylene fittings shall have the same or higher pressure rating as the adjoining pipe when installed. All fittings shall be manufactured from the same approved resin type, grade, and cell classification as the pipe itself. Comply with pipe or tubing manufacturer's recommendations for compatible fittings.

B. Molded fittings shall be manufactured and tested in accordance with ASTM D 3261 and shall be so marked. Molded fittings shall also be tested in accordance with AWWA C906 for larger fittings.

C. Fabricated fittings shall be made by heat fusion joining specially machined shapes cut from pipe, polyethylene sheet stock, or molded fittings. Fabricated fittings shall be tested in accordance with AWWA C906.

2.4 JOINTS

A. Sections of HDPE pipe shall be joined into continuous lengths on the job site above ground. The joining method shall be the thermal butt fusion method as outlined in ASTM D 2657. Butt fusion joining of pipe and fittings shall be performed in accordance with the manufacturer requirements and recommendations.

B. Pipe manufacturer shall provide a trained technician to the Contractor and certify that Contractor's personnel have received the proper training in the manufacturer's recommended procedures. The heat fusion equipment used in the joining procedures should be capable of meeting all conditions recommended by the pipe manufacturer, including, but not limited to, temperature requirements, alignment, and interfacial fusion pressure.

C. Heat fusion joining shall be 100 percent efficient, offering a joint weld strength equal to or greater than the tensile strength of the pipe. Socket fusion shall not be used. Extrusion welding or hot gas welding of HDPE shall not be used. Flanges (flange adapters and back-up rings), unions, grooved-couplers, transition fittings, and some mechanical couplers may be used to mechanically connect HDPE pipe without butt fusion. Refer to the manufacturer's recommendations.

D. Where noted on the Drawings, or needed for pipe repairs or joining to an existing pipe, electrofusion couplings may be used. Electrofusion couplings shall be manufactured from a PE 4710 resin similar to the HDPE pipe specifications hereinbefore and shall be in compliance with ASTM D2513, ASTM F1055, ASTM F2897, and AWWA C906 standards. Provide manufacturer recommended electrofusion machine for joining pipe. Couplings shall be as manufactured by Performance Pipe, a Division of Chevron Phillips Chemical Company, or approved equal.

E. De-beading of internal pipe joints is not required

2.5 FLANGES

A. ASTM A 240, Type 316 stainless steel backing flanges with 150-pound, ANSI B16.1 Standard drilling. Flanges shall be complete with one-piece, molded polyethylene stub ends. Flanged connections shall have the same pressure rating as the pipe or greater.

2.6 GASKETS

A. Flat ring, 1/8-inch thick EPDM elastomer with cloth finish, full face type, conforming to AWWA C207 and applicable parts of ANSI B16.21 and NSF 61, suitable for sewage and potable water use.

2.7 BOLTING

A. Type 316 stainless steel, ASTM A193, Grade B8 hex head bolts; and ASTM A 194, Grade 8 hex head nuts. Bolts shall be fabricated in accordance with ANSI B18.2 and provided with washers of the same material as the bolts.

PART 3 - EXECUTION

3.1 GENERAL

A. All polyethylene pipe shall be cut, fabricated, and installed in strict conformance with pipe manufacturer's recommendations. Joining, laying, and pulling of polyethylene pipe shall be accomplished by personnel experienced in working with polyethylene pipe. The pipe manufacturer shall certify, in writing, that the Contractor is qualified to join, lay, and pull the pipe or a representative of the pipe manufacturer shall be onsite to oversee the pipe joining. Expenses for the representative shall be paid for by the Contractor.

3.2 TRANSPORTATION

A. Care shall be taken during transportation of the pipe that it is not cut, kinked, or otherwise damaged.

3.3 STORAGE

A. Pipes shall be stored on level ground, preferably turf or sand, free of sharp objects which could damage the pipe. Stacking of the polyethylene pipe shall be limited to a height that will not cause excessive deformation of the bottom layers of pipes under anticipated temperature conditions. Where necessary due to ground conditions, the pipe shall be stored on wooden sleepers, spaced suitably and of such widths as not to allow deformation of the pipe at the point of contact with the sleeper or between supports.

3.4 HANDLING PIPE

A. The handling of the joined pipeline shall be in such a manner that the pipe is not damaged by dragging it over sharp and cutting objects. Ropes, fabric, or rubber-protected slings and straps shall be used when handling pipes. Chains, cables, or hooks inserted into the pipe ends shall not be used. Two slings spread apart shall be used for lifting each length of pipe. Pipe or fittings shall not be dropped onto rocky or unprepared ground. Slings for handling the pipeline shall not be positioned at butt-fused joints. Sections of the pipes with cuts and gouges exceeding 10 percent of the pipe wall thickness or kinked sections shall be removed and the ends of the pipeline rejoined.

3.5 JOINING PIPE SECTIONS

A. Pipes shall be joined to one another, to the polyethylene fittings, and to the flange connections by means of thermal butt-fusion. Polyethylene pipe lengths, fittings, and flanged connections to be joined by thermal butt-fusion shall be of the same type, grade, and class of polyethylene compound and supplied from the same raw material supplier.

B. Mechanical connections of the polyethylene pipe to auxiliary equipment such as valves, screens, and other piping systems shall be through flange connections which shall consist of the following:
   1. A polyethylene “stub end” shall be thermally butt-fused to the ends of the pipe.
   2. Provide Type 316 stainless steel backing flange, as specified hereinbefore. Insulating flanges shall be used where shown.
   3. Bolts and nuts of sufficient length to show a minimum of three complete threads when the joint is made and tightened to the manufacturer’s standard. Re-torque the nuts after 4 hours.
   4. Gaskets as specified.

C. Butt-Fusion or Socket Fusion Joining: Butt-fusion and/or socket fusion of pipes and fittings shall be performed in accordance with the pipe manufacturer’s recommendations as to equipment and technique.

D. Special Precautions at Flanges: Polyethylene pipe connected to heavy fittings, manholes, and rigid structures shall be supported in such a manner that no subsequent relative movement between the polyethylene pipe at the flanged joint and the rigid structures is possible.

E. Special Precautions for Temperature Effects: Long runs of polyethylene pipe shall be connected at the time of day and temperature as recommended by the pipe manufacturer to address expansion and contraction.

3.6 TESTING

A. All lines shall be tested at the pressures specified in Section 400205, PIPING SCHEDULE-WWTP and as indicated in Section 400510, PIPING-GENERAL-WWTP. The Contractor shall be responsible for proper coordination of all pipe, fittings, and other accessories so that all lines are designed to handle the test pressures specified.

END OF SECTION

SECTION 400553 – MANUAL VALVES – WWTP

PART 1 - GENERAL

1.1 WORK INCLUDED

A. This section covers the work necessary for furnishing and installing the various manual gate valves, ball valves, plug valves, check valves, butterfly valves, and other special valves, complete.

B. Related Sections:
   1. Section 400557, POWER OPERATED GATE AND VALVE ASSEMBLIES-WWTP.

1.2 GENERAL

A. Like items of equipment specified herein shall be the end products of one manufacturer in order to achieve standardization for operation, maintenance, spare parts, and manufacturer's service.

B. See the GENERAL CONDITIONS and Division 01, GENERAL REQUIREMENTS, which contain information and requirements that apply to the work specified herein and are mandatory for this project

C. All equipment shall be compliant with Federal Acquisition Register the clause 52.225-11, Buy American-Construction Materials under Trade Agreements (Nov 2023) and provision 52.225-12, Notice of Buy American Requirement-Construction Materials under Trade Agreements (May 2014).

1.3 SUBMITTALS DURING CONSTRUCTION

A. Submittals during construction shall be made as required in Section 013300, SUBMITTAL PROCDURES in Division 01, GENERAL REQUIREMENTS. In addition, the following specific information shall be provided:
   1. Valve Type Number.
   2. Specific details regarding valve construction, valve operators, valve boxes, extension stems, floor-stems, chain wheels, etc., as applicable for each valve type.
   3. Submit each valve type as a complete package.
   4. If requested by the Engineer, the valve manufacturer shall furnish an affidavit stating the materials options furnished have complied with these and other referenced specifications.

1.4 MANUFACTURERS' SERVICES

A. Manufacturer's services shall be provided in accordance with Section 019113, GENERAL COMMISSIONING REQUIREMENTS.

PART 2 - PRODUCTS

2.1 GENERAL

A. All valves shall be complete with all necessary operating handwheels, chain wheels, chains, extension stems, floor stands, valve boxes, worm and gear operators, operating nuts, lever operators, wrenches, and other accessories or appurtenances which are required for the proper completion of the work included under this section. Operators and other accessories shall be sized and furnished by the valve supplier and factory mounted.

B. Valves and operators shall be suitable for the exposure they are subject to: buried, submerged, interior, exterior, as applicable. They shall have all safety features required by OSHA. Unless otherwise shown, valves shall be the same size as the adjoining pipe. Renewable parts including discs, packing, and seats shall be of types recommended by valve manufacturer for intended service, but not of a lower quality than specified herein.

C. All units shall have the name of the manufacturer and the size of the valve cast on the body or bonnet or shown on a permanently attached plate in raised letters.

D. For the purpose of designating the type and grade of valve desired, manufacturers' name is given in the following specifications. Valves of equal quality by other manufacturers will be considered in accordance with the General Conditions.

E. The structure and appurtenant facilities have been designed around the first named manufacturer's equipment. Equipment furnished by all qualified interested manufacturers will be considered, provided that necessary structural and mechanical changes required are submitted in conformance with the requirements of the GENERAL CONDITIONS and Division 01, GENERAL REQUIREMENTS. The Contractor shall bear all costs for necessary changes for a complete and satisfactory installation.

2.2 VALVE TYPES

A. Valve types are specified by number in this Specification. The valves are indicated on the Drawings by valve equipment number call-out and size.

B. Not all valves specified herein may be used on this project. The Contractor shall coordinate all valve types with the Drawings and other specifications in these Contract Documents.

2.3 DESIGN FEATURES

A. Brass and bronze components of valves and appurtenances which have surfaces in contact with the water shall be alloys containing less than 16 percent zinc and 2 percent aluminum.

B. Approved alloys are of the following ASTM designations:
   1. A126, Class B, B 61, B 62, B 98 (Alloy UNS No. C65100, C65500, or C66100), B 139 (Alloy UNS No. C51000), B 584 (Alloy UNS No. C90300 or C94700), B 164, B 194, and B 127.
   2. Stainless steel Type 304 or 316 may be substituted for bronze at the option of the manufacturer and with the approval of the Engineer.

C. All gland bolts on exposed iron body valves shall be zinc plated steel and shall be fitted with zinc plated nuts. When specified or for valves in buried or submerged applications, gland bolts and nuts shall be Type 316 stainless steel.

D. Valve ends shall be as specified or as shown on the Drawings, and to suit the adjacent piping.

2.4 VALVE OPERATORS

A. General: All valves shall be equipped with operators. The valve operator types, as specified herein, describe only the general characteristics of the operator. The operator shall be compatible with the valve with which it will be used and shall be of the same manufacturer, or a product that is recommended by the valve manufacturer. The operator shall be sized to operate the valve for the full range of pressures and velocities imposed by the service. All valve operators shall open by turning counterclockwise.

B. Manual Operators:
   1. General:
      a. Manual handwheel operators shall be provided unless otherwise shown or specified. Ferrous handwheels shall be epoxy-coated or galvanized steel and then field painted the same color as the valve and associated pipeline. Lever operators may be supplied on quarter-turn type valves 6 inches and smaller, if recommended by the manufacturer; however, operator force shall not exceed 80 pounds under any operating condition, including initial breakaway.
      b. When the maximum force required to operate a valve under full operating head exceeds 80 pounds, gear reduction operators shall be provided. Gear operators shall be totally enclosed and lubricated.
      c. On quarter-turn valves, the valve operators shall be of the self-locking type to prevent the disc or plug from creeping and shall be provided with position indicators to show the position of the valve disc or plug. Operators of the worm and gear type shall have self-locking worm gears, one-piece design, of cast or ductile iron gear material, accurately machine cut. The worm shall be hardened alloy steel, with thread ground and polished.
      d. Operators of the geared traveling nut type shall have threaded steel reach rods with an internally threaded bronze or ductile iron nut.
   2. Exposed Operators:
      a. Exposed operators shall be furnished with chain wheel operators (CWO), geared operators (GO), extension stems, floor stands, and other elements as shown on the Drawings or as required to permit operation from the normal operating level.
      b. Lever type operators shall have some means of being fixed in any given position to prevent accidental movement; shall be of rugged, noncorrosive construction; and shall be fully compatible with the valve.
   3. Buried Operators:
      a. Buried service operators on valves larger than 2-1/2 inches shall have a 2-inch AWWA operating nut. Buried operators on valves 2 inches and smaller shall have cross handle for operation by forked key. All moving parts of the valve and operators shall be enclosed in a housing to prevent contact with the soil.

b. Buried services operators for AWWA butterfly valves shall be traveling nut operators designed to withstand 300 foot-pounds of input torque at the fully open or fully closed positions without damage to the valve or operator and shall be grease packed and gasketed to withstand a submersion in water to 10 psi. Under certain circumstances where the valve is a large diameter or a high pressure service, the engineer may require that the operator be designed to withstand a 450 foot-pound input torque.

c. Valves shall be installed with extension stems, as required, and valve boxes.

4. Unless specified otherwise hereinafter or shown otherwise on the Drawings, exposed operators shall be of the type listed below:

Type of Valve	Size	Operator
Gate	All Sizes	Handwheel
Butterfly	6" and Smaller	Locking lever with 10-position plate
	8" and Larger	Geared handwheel
Plug	5" and Smaller	Wrench lever
	6" and Larger	Geared handwheel except as noted hereinafter
Ball	All Sizes	Lever

5. Where valve centerline is more than 6 feet 9 inches above floor line, chain and wheel guide assemblies, or chain lever assemblies, shall be provided.

2.5 ACCESSORIES

A. Tagging: Each valve operator shall be provided with a 1-1/2-inch minimum diameter heavy brass or stainless steel tag. Each tag shall bear the valve number shown on the Drawings. The tags shall be attached to the operator with key rings so that ring and tag cannot be removed. The numbers and letters shall be of block type, with 1/4-inch high numbers and letters stamped thereon.

B. Limit Switches: Certain valves are required to be provided with limit switches. Switches and associated attachment mountings shall be factory installed and, unless otherwise indicated, limit switches shall be SPST, rated at 5 amps, 120 volts ac. Check the various process mechanical drawings and the instrumentation and control drawings to locate valves requiring limit switches. Also refer to Section 400557, POWER OPERATED GATE AND VALVE ASSEMBLIES-WWTP for additional switch requirements.

2.6 APPURTENANCES

A. Valve Boxes for Buried Valves: Valve boxes shall be Buffalo two-piece sliding (slip) type, cast iron, with 5-1/4-inch minimum inside diameter shaft of appropriate length for the installation. The word SEWER or WATER (as appropriate) shall be cast into the top of the lid. Extension pieces, if required, shall be the manufacturer's standard type. Units shall be Tyler Union No. 29U, Bingham and Taylor Figure No. 4908, Proselect Series PSB461A, or equal. All units shall be complete with all necessary bases and accessories. Valve boxes shall be coated with manufacturer’s standard bituminous coal tar base coating.

B. T-Handled Operating Wrenches for Buried Valves: Provide two galvanized or painted steel operating wrenches, 4.0 to 4.5 feet total length, Penn-Troy Manufacturing T-Wrench, Raptor Waterworks No. 410 Series, or equal.

C. Extension Stems for Valve Operators: Where the depth of the valve is such that its centerline is more than 3 feet below grade, operating extension stems shall be provided to bring the operating nut to a point 6 inches below the surface of the ground and/or box cover. Extension stems shall be constructed of galvanized steel, or stainless steel if submerged, and shall be complete with 2-inch square operating nut as manufactured by Clow Valve Company, Troy Valve Company, or equal.

D. Chain Wheels and Guides: Chain wheels and guides shall be Figure F-5680 as manufactured by Clow Valve Company, Series GRG as manufactured by Babbitt Steam Specialty Company, Series 04 as manufactured by Bray Controls, or equal, supplied by the specific valve manufacturer to fit the particular valve and operator. Chain wheels and guides shall be galvanized or cadmium-plated. Chains shall be of the size recommended by the valve manufacturer and shall extend to within 4 feet of the operating floor. Chains shall be heavily galvanized or cadmium-plated. Where chains hang in normally traveled areas, appropriate “L” type tie-back anchors shall be provided and located as directed by the Engineer.

E. Floor Stands and Extension Stems: When required by the installations, floor stands and extension stems shall be provided for operation of valves. Floor stands shall be of the non-rising stem, indicating type, complete with all necessary steel extension stems, couplings, handwheels, stem guide brackets, and special yoke attachments as required by the valves and recommended and supplied by the stand manufacturer. Stem guides shall be spaced so that the stem L/R ratio does not exceed 200. Provide all necessary anchor bolts in Type 316 stainless steel. Floor stands shall be cast iron base type, Figure F-5505-T as manufactured by Clow Valve Company, Figure A25655 as manufactured by Troy Valve Company, or equal, supplied by the specific valve manufacturer to fit the particular valve and operator. All handwheels shall turn counterclockwise to open the valves. Where operators for quarter-turn valves are located on floor stands, extension stems shall be torque tube type properly sized for the maximum torque capacity of the valve.

F. Floor Boxes and Extensions Stems: Floor boxes shall be cast or ductile iron, Clow Valve Company No. F-5695-T; Troy Valve Company No. A25700B; or equal. Provide steel valve extension stems where required to locate the operating nut in the floor box, as specified hereinbefore. Stem guides shall be spaced so that the L/R slenderness ratio does not exceed 200. Provide all necessary anchor bolts in Type 316 stainless steel.

G. Extension Bonnets for Valve Operators: Where shown on the Drawings, extension bonnets shall be supplied, complete with stem and accessories, as required to fit the given valve and operators. Bonnet and stem shall be constructed of steel and manufacturer's standard paint system. Bonnets shall be as supplied by Henry Pratt Company, Trumbull Manufacturing, or equal.

H. Stem Guides: Where needed for floor stands and/or floor boxes, stem guides shall be provided. Stem guides shall be of ductile iron construction, fully adjustable, bronze bushed where extension stem passes through guide, Clow Valve Company No. F-5660-T, Troy Valve Company Model A25680, or equal.

2.7 GATE VALVES

A. V125: Gate valves, 3-inch to 36-inch, shall be ductile iron-body, bronze-mounted, resilient seat gate valves with non-rising stems with design, construction and pressure rating conforming to AWWA Specification C509/515, with modifications specified herein. Stem seals shall be double rubber O-rings designed so that the seal above the stem collar can be replaced with the valve under pressure in full open position. Gate valves for buried installation shall have mechanical joint ends and 2-inch square wrench nut conforming to AWWA C509/515 for key operations. Exposed valves shall be flanged, ANSI Class 125. All valves shall open counter-clockwise unless indicated otherwise in the Drawings or these Specifications. Valves shall be rated 250 psig minimum, and shall be Mueller Company Resilient Wedge gate 2361 Series valves, American Cast Iron Pipe Company Series 2500, or equal. Coatings and corrosion protection systems shall be as specified hereinafter in Part 3 EXECUTION.

2.8 GLOBE VALVES

A. V235: Interior hose valves for use in buildings, valve vaults, or other areas shown on the Drawings shall be cast bronze globe valve, 3/4-inch size, with NPT screwed ends, union bonnet, inside screw rising stem, composition bronze or PTFE disc, operation handwheel, and NPT by NST hose thread adapter outlet connection. Valves shall be rated 150-pound SWP, 300-pound WOG and shall be Walworth Company Figure W95; Crane Energy Figure No. 7TF; or equal.

2.9 BALL VALVES

A. V300: Ball valves 3 inches and smaller, for general water and air service, shall be all bronze, end entry type, with threaded or solder ends, full bore ports, PTFE or Teflon seats and packing, and hand lever operators, rated 600 psi minimum at 200 degrees F. Install union adjacent to valves to provide access to seats. Valve shall be Jenkins Figure No. 201J or 202J, Stockham Figure T-255 or S-255, or equal.

B. V307: Ball valves 3 inches and smaller shall have Type 316 stainless steel bodies with Type 316 stainless steel balls. Valves shall be 2-piece, full port type with threaded ends, rated 300-pound WOG minimum. Seat, body seal, and stem packing shall be reinforced PTFE. Valves shall have lever operators. Valves shall be Watts Series S-FBV-1, KF Contromatics Series 8200, Bray Flow-Tek Model S80, or equal.

C. V330: PVC ball valves 2 inches and smaller shall be rated 150 psi minimum at 73 to 100 degrees F, with ASTM D1784 Cell Classification 12454, Type I, Grade 1 polyvinyl chloride body, ball, and stem. Valves shall be of end entry, double union design with solvent weld socket ends, or single union ball valves with flanged ends drilled to 150-pound ANSI Standard. Valves shall have replaceable PTFE seats and EPDM O-ring stem seals. Valves shall have handle for manual operation. Valves shall be GF Piping Systems Type 546 Linear PVC; Nibco Chemtrol PVC Tru-Bloc True Union Model D; Asahi-America PVC Type 21/21a; Spears Manufacturing Company True Union 2000 PVC; or equal. Where noted, or specifically needed for a unique chemical service, provide vented ball valve. Venting hole shall be provided by the valve manufacturer.

D. V331: PVC ball valves 3 inches and larger shall be rated 150 psi minimum at 73 to 100 degrees F, with ASTM D1784 Cell Classification 12454, Type I, Grade 1 polyvinyl chloride full port body, ball, and stem. Valves shall be of end entry, double union design with solvent weld socket ends, or single union ball valves with flanged ends drilled to 150-pound ANSI Standard. Valves shall have replaceable PTFE seats and EPDMO-ring stem, face and carrier seals. Valves shall have handle for manual operation. Valves shall be GF Piping Systems Type 546 Linear PVC; Nibco Chemtrol PVC Tru-Bloc True Union Model C; Asahi-America PVC Type 21/21a; Spears Manufacturing Company True Union 2000 PVC; or equal.

E. V335: CPVC ball valves 2 inches and smaller shall be rated 200 psi minimum at 73 to 100 degrees F, with ASTM D1784, Type IV, Grade 1 chlorinated polyvinyl chloride (CPVC) body, ball, and stem. Valves shall be of end entry, double union design with solvent weld socket ends, or single union ball valves with flanged ends drilled to 150-pound ANSI Standard. Valves shall have replaceable Teflon or PTFE seats and EPDM O-ring stem seals. Valves shall have handle for manual operation. Valves shall be GF Piping Systems Type 546 Linear CPVC; Nibco Chemtrol CPVC Tru-Bloc True Union Model D; Asahi-America CPVC Type 21/21a; Spears Manufacturing Company True Union 2000 CPVC; or equal. Where noted, or specifically needed for a unique chemical service, provide vented ball valve. Venting hole shall be provided by the valve manufacturer.

F. V336: CPVC ball valves 3 inches and larger shall be rated 150 psi minimum at 73 to 100 degrees F with ASTM D 1784, Type IV, Grade 1 chlorinated polyvinyl chloride (CPVC) full port bodies. Valves shall have Teflon or PTFE seats and EPDM O-ring stem, face, and carrier seals. Valves shall be end entry type with dual union solvent weld socket ends, or single union ball valves with flanged ends drilled to 150-pound ANSI Standard. Valves shall be GF Piping Systems Type 546 Linear CPVC; Nibco Chemtrol CPVC Tru-Bloc True Union Model C; Asahi-America CPVC Type 21/21a; Spears Manufacturing Company True Union 2000 CPVC; or equal. Where noted, or specifically needed for a unique chemical service, provide vented ball valve. Venting hole shall be provided by the valve manufacturer.

G. V338: PP ball valves 3 inches and smaller shall be rated 150 psi at 73 degrees F, with ASTM D4101 polypropylene body, ball, and stem. Valves shall be of end entry, double union design with heat fusion ends, or single union ball valves with flanged ends drilled to 150-pound ANSI Standard. Valves shall have replaceable PFTE seats and EPDM or Teflon O-ring stem seals. Valves shall have handle for manual operation. Valves shall be Asahi-America Type 21/21a Polypropylene, Nibco Chemtrol Natural PP Tru-Bloc True Union Model C, or equal. Where noted, or specifically needed for a unique chemical service, provide vented ball valve. Venting hole shall be provided by the valve manufacturer.

2.10 PLUG VALVES

A. V405: Eccentric plug valves 4 inches through 20 inches shall be of the non-lubricated type with wrench lever manual operators for valves 5 inches and smaller, and totally enclosed, geared, manual handwheel operators for valves 6 inches and larger. Valves shall be rated 175 psi minimum for valves 12 inches and smaller and 150 psi minimum for valves 14 inches and larger. Bodies shall be of the rectangular ported design and shall have an ASTM A126-Grade B cast iron body with 125-pound ANSI Standard flanged ends, or as shown on the Drawings. Valves shall have a Type 316 stainless steel or ductile iron plug, a Buna-N or EPT or other resilient plug facing suitable for the application, Acrylonitrile Butadiene (NBR) packing, and stainless steel bearings. Shaft seals shall be of multiple V-ring or U-cup type and shall be externally adjustable and repackable without removing the actuator or bonnet from the valve under pressure. Seats shall be raised and shall have a 1/8-inch welded overlay of 95 percent minimum pure nickel completely covering the raised surface to insure that the plug contacts only nickel. Eccentric valves and actuators shall be as manufactured by DeZurik Series PEC; Homestead Series 120; Crispin Valve Series K-Flo 700 or 800; Henry Pratt Ballcentric; or equal.

B. V407: Eccentric plug valves 4 inches through 12 inches shall be round ported valves of the non-lubricated type with wrench lever manual operators for valves 5 inches and smaller, and totally enclosed, geared, manual handwheel operators for valves 6 inches and larger. Valves shall be rated 150-psi minimum, and shall have an ASTM A126-Grade B cast iron body with 125-pound ANSI Standard flanged ends, or as shown on the Drawings. Valves shall have a balanced stainless steel or ductile iron plug coated with Chloroprene (CR), Buna-N or EPT elastomer, Acrylonitrile Butadiene (NBR) or Buna-Vee packing or O-ring seals, stainless steel or corrosion resistant bearings, and nickel, bronze or epoxy-coated seats. Seats shall be raised and shall have a 1/8-inch welded overlay of 95 percent minimum pure nickel completely covering the raised surface to insure that the plug contacts only nickel. Valves with rectangular ports are not acceptable. Round ported valves shall be as manufactured by Henry Pratt Ballcentric; Crispin Valve Series K-Flo 800; or equal.

2.11 BUTTERFLY VALVES

A. General: Butterfly valves specified as AWWA C504 shall be in full compliance with AWWA C504 and the following requirements:
   1. Valves shall be suitable for partially open operations and for very infrequent operation after extended periods of inactivity.
   2. Elastomer seats that are bonded or vulcanized to the body shall have the adhesive integrity of the bond between seat and body assured by sample testing with a minimum 75-pound pull in accordance with ASTM D429, Method B.
   3. Inside diameter at seat shall not be less than the inside diameter of the connecting pipe by more than 1 inch.
   4. Valves shall be bubble-tight with rated pressure applied from either side of the valve disc.
   5. There shall be no travel stops for the disc on the interior of the body.
   6. Shaft seals shall be self-adjusting split-V type.
   7. Thrust bearing surfaces of metal-to-metal shall not be exposed in the flowstream of the valve.
   8. An affidavit shall be furnished from the manufacturer certifying that the valves are in full compliance with AWWA C504.

B. V500: Standard service butterfly valves 6 inches and smaller shall be flanged end, short body type, AWWA C504 Class 150B, with manual locking hand lever operators unless otherwise shown on the Drawings. Valves shall have ASTM A126, Class B cast iron valve body with 125-pound full faced flanges drilled in accordance with ANSI B16.1. Valve disc shall be contoured ASTM A351 stainless steel; ASTM A436, Type 1 Ni-resist cast iron with maximum lead content of 0.003 percent; ASTM A48, Class 40 cast iron; or ASTM A536, Grade 65-45-12 ductile iron. Valve shaft shall be Type 304 stainless steel with self-lubricating, corrosion-resistant sleeve type bearings. Valve seat shall be attached to the valve body and shall be of Acrylonitrile Butadiene, EPDM, neoprene or Buna-N. Valves shall be Henry Pratt Company Model 2FII, DeZurik AWWA Model, Val-Matic Series 2000, Mueller Company Lineseal III, or equal.

C. V530: Lugged wafer butterfly valves for low pressure process air service, 2 inches to 24 inches, shall be thin-profile, lugged wafer style. They shall have cast iron or ductile iron bodies; Type 316 stainless steel or Nylon 11 coated ductile iron disc; Type 416, 420, or 316 stainless steel stem; EPDM replaceable resilient seats with molded in or tongue and groove O-rings on the flange contact face; non-disc mounted; suitable for 250 degrees F temperature; and self-adjusting packing suitable for 250 degree F service. Valves shall be bubble-tight at 150 psi differential pressure and shall be suitable for installation between ANSI 125- and 150-pound flanges. Valves shall be Bray Controls Series 31, DeZurik BOS-CL, Henry Pratt Industrial BF Series, or equal, with manual worm gear handwheel operator unless shown otherwise.

D. V540: PVC butterfly valves, 2-inch through 8-inch, shall be wafer or lug wafer body type, pressure rated 150 psi CWP at 73 degrees F. Valves shall have solid, ASTM D 1784, Type I, Grade 1 PVC body and contoured PVC or EPDM valve disc, straight through, one-piece valve shaft of Type 316 or 416 stainless steel, and non-metallic, glass-filled Teflon or stainless steel backed PTFE sleeve type shaft bearings. Valve shaft seals shall be EPDM or Viton O-ring type. Valve seats shall cover the entire interior surface and outside face of the valve body and shall be EPDM or Viton. Valves shall be provided with lever-wrench manual operators and shall be suitable for installation between ANSI 125- and 150-pound flanges, as manufactured by Nibco Chemtrol Model C PVC, GF Piping Systems Type 567 PVC, Asahi/America Model 57 PVC, or equal.

E. V541: CPVC butterfly valves, 2-inch through 8-inch, shall be wafer or lug wafer body type, pressure rated 150 psi CWP at 73 degrees F. Valves shall have solid, ASTM D 1784, Type I, Grade 1 CPVC body and contoured CPVC or EPDM valve disc, straight through, one-piece valve shaft of Type 316 or 416 stainless steel, and non-metallic, glass-filled Teflon or stainless steel backed PTFE sleeve type shaft bearings. Valve shaft seals shall be EPDM or Viton O-ring type. Valve seats shall cover the entire interior surface and outside face of the valve body and shall be EPDM or Viton. Valves shall be provided with lever-wrench manual operators and shall be suitable for installation between ANSI 125- and 150-pound flanges, as manufactured by Nibco Chemtrol Model C CPVC, GF Piping Systems Type 567 CPVC, Asahi/America Model 57 CPVC, or equal.

2.12 CHECK AND FLAP VALVES

A. General: Certain check valves require the mounting of limit switches and associated attachments; check process instrumentation and control drawings and the various process mechanical drawings for application. Switches shall actuate when the valve clapper is 0.1 inch off its seat.

B. V600: Check valves 3 inches and smaller shall be all-bronze, with screwed ends and cap, regrinding seat, Y-pattern body, and swing type disc. Valves shall be rated for 125-pound SWP, 200-pound WOG, and shall be Crane Energy Figure No. 37, Stockham No. B-319Y, Walworth Company Figure W506, or equal.

C. V602: Check valves 2 inches through 12 inches shall be flanged end, cast iron body, bronze mounted swing type, with solid bronze hinges and stainless steel or brass shaft. Valves shall be rated 125-pound SWG, 200-pound WOG, and shall be Crane Energy Figure No. 373, Stockham Figure G-931, Walworth Company Figure W928F, or equal.

D. V603: Check valves 2 inches through 12 inches shall be full body ANSI B16.1 Class 125 flanged end, ASTM A536 Grade 65-45-12 ductile iron body, Buna-N rubber flapper swing type, with stainless steel external fasteners. Valve body shall have a flow area equal to the nominal pipe diameter at all points throughout the valve. Valve seat shall be on a 45-degree angle. The access cover shall be large enough to permit disc replacement without removing the valve from the line. The interior shall be fully coated with a liquid thermosetting epoxy. Valves shall be rated for 175 psi working pressure minimum. Cracking pressure shall be 0.25 psi. Valve shall be VAG GA Industries Model 200-D, Cla-Val Model 584 Series, Val Matic 500A Swing-Flex, or equal.

E. V630: PVC ball check valves 4 inches and smaller shall have ASTM D1784 Cell Classification 12454, Type I, Grade 1 Schedule 80 polyvinyl chloride body with dual union socket weld ends, rated 150 psi at 100 degrees F. Valves shall be equipped with EPDM or FKM seats and seals. Valves shall be Nibco Chemtrol True Union PVC Ball Check, GF Piping Systems Type 561 PVC Cone Check, Spears Manufacturing True Union 2000 PVC Ball Check, Asahi-America PVC Ball Check Valve, or equal.

F. V631: CPVC ball check valves 4 inches and smaller shall have ASTM D1784 Cell Class 23477B Schedule 80 chlorinated polyvinyl chloride body with dual union socket weld ends, rated at 150 psi at 100 degrees F and 110 psi at 140 degrees F. Valves shall be equipped with EPDM or FKM seats and seals. Valves shall be Nibco Chemtrol True Union CPVC Ball Check, GF Piping Systems Type 561 CPVC Cone Check, Spears Manufacturing True Union 2000 CPVC Ball Check, Asahi-America CPVC Ball Check Valve, or equal.

G. V635: Polypropylene ball check valves 4 inches and smaller shall have ASTM D4101 Type 2 or Type 3 Schedule 80 polypropylene random (PPR) copolymer resin body with dual union heat fusion ends, rated 150 psi at 100 degrees F. Valves shall be equipped with EPDM or FKM seats and seals. Valves shall be Nibco Chemtrol True Union Natural Polypropylene Ball Check, GF Piping Systems Type 561 PP-H Cone Check, Asahi/America True Union Proline PP Check Valve, or equal.

H. V692: Rubber flexible duckbill end-of-pipe check valves 4 inches and larger shall be all rubber flat bottom, flared top Tideflex Series TF-1, as manufactured by Red Valve Company, or approved equal. Provide with a slip-on end suitable for connection to thickwall PVC or ductile iron piping, size as shown on the Drawings. End connection clamps and bolts shall be 316 stainless steel. Valve inlet port shall be the same inside diameter as the inlet pipe minimum and the valve port area shall contour down to a curved duckbill which shall allow passage of flow in one direction while preventing reverse flow. End duckbill shall be flat on the invert side of the valve to allow installation in manholes or other locations where the pipe is close to the channel floor. Rubber material shall contain fabric reinforcement and be suitable for submergence in raw, untreated water or wastewater, or in exposed conditions with temperatures down to minus 30°F. Check valves for exposed service shall also have a protective EPDM exterior wrapping for protection against sunlight attack. Valve shall open and permit flow through valve with no more than 2” water column head pressure (“cracking pressure”).

I. V694: Rubber flexible duckbill check valves 4 inches and larger shall be all rubber pipe insert type check valves. The valve shall be a low headloss, check valve fabricated of ply reinforced rubber, cured and vulcanized into a one-piece unibody construction. The valve shall open at 1 to 2 inches of water head pressure. The valve shall be installed inside the pipe with stainless steel expansion clamps, and no portion of the valve shall protrude beyond the pipe opening. The valve shall be Tideflex Series 37G by Red Valve Company; Proco Products ProFlex Style 740; or equal.

2.13 MISCELLANEOUS VALVES

A. Telescoping Valves:

1. V915: Telescoping valves shall be of the rack and pinion type or lift rod with lifting nut type, with rising stem, floor stand, and aluminum or cast/ductile iron handwheel. Valve shall consist of a stainless steel or cast iron floor stand, incorporating the rack guides and pinion, or lifting rod and nut, and handwheel supports. Rack and pinion and connecting rods shall be Type 304 stainless steel. Lifting rod type shall have Type 304 stainless steel rod and brass lifting nut. Slip pipe shall be 304 stainless steel with a minimum thickness of Schedule 10S, with V-notch weir-crest skimming funnel, ductile iron pipe 150-pound stainless steel companion flange, O-ring seal and gasket for connection to discharge pipe. Skimming funnel shall have minimum top diameter of at least 4-inches larger than nominal size of discharge pipe and be surrounded by a scum baffle of 12’ height. Provide Type 316 stainless steel anchor bolts. Valve shall be 6-inch nominal to snugly fit into a 6-inch ductile iron pipe section and shall be continuously adjustable from a high point to a low point below the bottom of the floor stand as shown on the Drawings. Also provide visual level indicator with clear stem cover calibrated in ½-inch increments and a sway brace. Telescoping valves shall be as manufactured by Halliday Products Series V4R Model No. 502; Troy Valve equivalent model; or equal.

B. Sampling Valves:
   1. V926: Sampling valves for water service shall be brass body sample hose bibs, globe style, ½-inch male NPT (MIP) inlet by plain end spout, smooth nose, chrome plated, lead free, rated 125 psi, USA Bluebook Model 47393, Matco Norca Model FY-691LF, or equal.

2.14 BOLTS, GASKETS, GLANDS, NUTS, AND SOLVENT CEMENTS

A. Bolts, gaskets, glands, nuts, and miscellaneous accessories required to install all manual valves are to be furnished as specified in Section 400510, PIPING – GENERAL-WWTP.

B. Bolts and nuts for flanged connections in buried or submerged services shall be Type 316 stainless steel, with American Standard regular hexagonal dimensions. Bolts for flanged connections in exposed services shall be galvanized steel with American Standard regular unfinished square or hex heads. Nuts in exposed applications shall be galvanized steel with American Standard regular hexagonal dimensions.

C. Gaskets for connections in chemical services shall be compatible with the chemicals as recommended by the manufacturer and as approved by the Engineer. Gaskets for flanged connections in all other services shall be 1/8-inch thick cloth inserted rubber suitable for sewage or potable water services. Gaskets shall extend from the inside diameter of the flange to at least the inside edge of the bolt holes (ring gaskets) for raised face flanges, or they shall extend beyond the bolt circle to the outside edge of the flange (full face gaskets for 125 pound flat face flanges). Bolt holes shall be factory punched through full face gaskets. Use of split or segmented gaskets is not acceptable.

D. Solvent cement and primers for solvent weld connections in chemical services shall be compatible with the chemicals as recommended by the manufacturer and as approved by the Engineer.

PART 3 - EXECUTION

3.1 GENERAL

A. Before installation, carefully clean valves of all foreign material, adjust stuffing boxes, and inspect valves in open and closed positions. Install valves in accordance with the applicable portions of these Specifications. Some valves require special orientation, see the Drawings. Unless otherwise indicated, install valves with the stem vertical. Mount horizontal valves in such a manner that adequate clearance is provided for operation. Installation practices shall conform to manufacturer’s recommendations.

B. Valves shall be tested at the same time that the adjacent pipeline is tested. Joints shall be watertight at test pressures before acceptance. The Contractor will be held liable for any damage caused by the testing.

C. Thoroughly clean threads of screwed joints by wire brushing, swabbing, or other approved methods. Apply joint compound or Teflon tape to threads prior to making joints. Joints shall be watertight at test pressures before acceptance.

D. Bolt holes of flanged valves shall straddle the vertical centerline of the pipe run. Prior to installing flanged valves, the flange faces shall be thoroughly cleaned. After cleaning, insert gasket and bolts, and tighten the nuts progressively and uniformly. If flanges leak under pressure, loosen or remove the nuts and bolts, reseat or replace the gasket, retighten and/or reinstall the nuts and bolts, and retest the joints. Joints shall be watertight at test pressures before acceptance.

E. For electrically actuated valves, the valve and associated actuator shall be mounted per the manufacturer's recommendations. See Section 400557, POWER OPERATED GATE AND VALVE ASSEMBLIES-WWTP for further details.

3.2 BURIED VALVES

A. Buried valves shall be set with the operating nut vertical. An 8 by 16 by 2-inch concrete block shall be placed under the valve for support. The valve shall be protected from corrosion as specified herein and in Section 400510, PIPING – GENERAL-WWTP. Valve boxes shall be centered and plumb over the operating nut and shall be set so that no shock or stress will be transmitted to the valve.

B. Buried valves shall have interior and exterior coating of powder epoxy (fusion bonded epoxy) according to AWWA C550. Bolts, nuts, and washers (including in bonnet and stuffing box) shall be Series 300 stainless steel as specified hereinbefore. Wrap valve in polyethylene bagging**.**

3.3 EXPOSED VALVES

A. Generally, unless otherwise indicated on the Drawings, all valves installed in horizontal runs of pipe having centerline elevations 4 feet 6 inches or less above the finish floor shall be installed with their operating stems vertical. Valves installed in horizontal runs of pipe having centerline elevations between 4 feet 6 inches and 6 feet 9 inches above the finish floor shall be installed with their operating stems horizontal. If adjacent piping prohibits this, the stems and operating handwheel shall be installed above the valve horizontal centerline as close to horizontal as possible. Valves installed in vertical runs of pipe shall have their operating stems orientated to facilitate the most practicable operation.

B. Where manually operated valves are over 6 feet 9 inches above the floor line, chain wheel and guide assemblies or chain lever assemblies shall be furnished and installed for operation of the valves, unless otherwise directed by the Engineer.

C. Teflon tape or joint compound shall be applied to the male end of threaded joints. Tape or compound shall be used only on metal pipe or fittings. Valves shall be installed with the stem plumb and vertical.

3.4 ISOLATION VALVES

A. A line size ball valve and union shall be installed upstream of each solenoid valve, in-line flow switch, or other in-line electrical device, excluding magnetic flowmeters, for isolation during maintenance.

3.5 ACCESS DOORS

A. Location of valves shall be as required to provide accessibility for control and maintenance. Furnish access doors in finished walls and plaster ceilings where necessary for valve access.

3.6 ANCHOR BOLTS

A. Anchor bolts for floor stands, stem guides, etc. shall be in accordance with this specification and Section 055000, METAL FABRICATIONS-WWTP.

3.7 CERTIFICATION

A. If requested by the Engineer, the valve manufacturer shall furnish an affidavit stating the materials options furnished has complied with these and other referenced specifications.

END OF SECTION

SECTION 400555 – SELF CONTAINED AUTOMATIC VALVES – WWTP

PART 1 - GENERAL

1.1 WORK INCLUDED

A. This section covers the work necessary to furnish and install the various self-contained automatic process valves for the Hospital WWTP and the Hon-Dah WWTP, complete.

1.2 GENERAL

A. Like items of equipment specified herein shall be the end products of one manufacturer in order to achieve standardization for operation, maintenance, spare parts, and manufacturer's service.

B. See CONDITIONS OF THE CONTRACT and Division 01 00 00, GENERAL REQUIREMENTS, which contain information and requirements that apply to the work specified herein and are mandatory for this project

C. All equipment shall be compliant with Federal Acquisition Register the clause 52.225-11, Buy American-Construction Materials under Trade Agreements (Nov 2023) and provision 52.225-12, Notice of Buy American Requirement-Construction Materials under Trade Agreements (May 2014).

1.3 SUBMITTALS DURING CONSTRUCTION

A. Submittals during construction shall be made as required in Section 01 33 00, SUBMITTALS in Division 01 00 00, GENERAL REQUIREMENTS.

PART 2 - PRODUCTS

2.1 GENERAL

A. All valves shall be complete, with all necessary operating appurtenances included in the work under this section.

B. All units shall have name of their manufacturer and the size of the valve cast on the body or bonnet or shown on a permanently attached plate in raised letters.

C. For the purpose of designating the type and grade of valve desired, manufacturers' name is given in the following specifications. Valves of equal quality by other manufacturers will be considered in accordance with the General Conditions.

D. The structure and appurtenant facilities have been designed around the first named manufacturer's equipment. Equipment furnished by all qualified interested manufacturers will be considered, provided that necessary structural and mechanical changes required are submitted in conformance with the requirements of GENERAL CONDITIONS and Division 01, GENERAL REQUIREMENTS. The Contractor shall bear all costs for necessary changes for a complete and satisfactory installation.

2.2 VALVE TYPES

A. Valve types are specified by number. The type of valve to be used for each service and application is indicated on the Drawings by valve number call-out and corresponds to the valve type through various schedules in this section.

2.3 AIR RELEASE AND AIR AND VACUUM VALVES

A. Unless noted otherwise below, all air release and air and vacuum valves shall have cast iron or ductile iron body and cover, and stainless steel float. Float guides, bushing, and lever pin shall be stainless steel or bronze. Unless noted otherwise below, the orifice shall have the manufacturer's largest standard diameter (size) for the design pressure. All valves shall comply with AWWA C512 and all potable water service valves shall be NSF 61 certified. An isolation valve, as specified hereinafter, shall be provided for each air release type valve. Valves shall be as specified below and as shown in Table 1.

1. Type 30: Low to moderate pressure air release valves ½-inch to 2-inch size shall have cast or ductile iron body, stainless steel floats, stainless steel compound float levers, Delrin or stainless steel connecting hardware, and Buna-N or Viton seats. Valves shall be designed for minimum 150 psi service. Valves shall be provided with NPT screwed air discharge for piping connections and plug drain. Size of valves shall be as indicated. Valves shall be Dezurik/APCO Model No. 50, No. 200, or No. 200A air release valves; Val-Matic Valve and Manufacturing Corporation Series 15A to 45; or equal. A V307 ball valve shall be provided as an isolation valve for each air release valve, as specified in Section 40 05 53, MANUAL VALVES.

TABLE 1

Hospital WWTP Valve No.	Hon-Dah WWTP Valve No.	Type No.	Inlet and Outlet Size (inches)	Design Pressure (psig)	Service
n/a	2140-ARV-01	30	1-inch	50	HWE
n/a	2220-ARV-01	30	1-inch	150	HWE
Other Valves as applicable	Other Valves as applicable	30	1-inch	50	various

2.4 ACCESSORIES

A. Tagging: Each valve operator shall be provided with a 1-1/2-inch minimum diameter heavy brass or stainless steel tag. Each tag shall bear the valve number shown on the Drawings. The tags shall be attached to the operator with key rings so that ring and tag cannot be removed. The numbers and letter shall be of block type, with ¼-inch high numbers and letters stamped thereon.

PART 3 - EXECUTION

3.1 GENERAL

A. Before installation carefully clean valves of all foreign material, and inspect valves in open and closed positions. Install valves in accordance with the applicable portions of these Specifications. Installation practices shall conform to manufacturers' recommendations.

B. Prior to installing flanged valves, the flanged faces shall be thoroughly cleaned. After cleaning, insert the gasket and tighten the nuts progressively and uniformly. If flanges leak under pressure, loosen the nuts, reseat or replace the gasket, retighten the nuts, and retest the joints. Joints must be watertight or airtight at test pressures before acceptance.

C. Thoroughly clean threads of screwed joints by wire brushing, swabbing, or other approved methods. Apply approved joint compound to threads prior to making joint. Joints shall be watertight or airtight at test pressures before acceptance.

3.2 TESTING

A. Valves shall be tested at the same time that the adjacent pipeline is tested. Joints shall show no visible leakage under test. Repair joints that show signs of leakage prior to final acceptance. If there are any special parts of control systems or operators that might be damaged by the pipeline test, they shall be properly protected. The Contractor will be held responsible for any damage caused by the testing.

3.3 PAINTING

A. All exterior ferrous metal surfaces shall be shop painted with manufacturer's standard paint and shall be compatible with the adjacent piping paint system as specified in Section 0996000, HIGH PERFORMANCE COATINGS-WWTP. Valves shall be field painted the same as the adjacent pipe.

END OF SECTION

SECTION 400557 – POWER OPERATED GATE AND VALVE ASSEMBLIES – WWTP

PART 1 - GENERAL

1.1 WORK INCLUDED

A. This section covers the work necessary to furnish and install, complete, the various power operated valve and gate assemblies at the Sewer Lift Station, Hospital WWTP, and Hon-Dah WWTP. This includes electrically actuated open/close and throttling valves and gates.

B. Related Sections:
1. Section 333723, STAINLESS STEEL SLIDE GATES
2. Section 400553, MANUAL VALVES-WWTP
3. Section 406110, GENERAL REQUIREMENTS-WWTP
4. Division 26, ELECTRICAL-WWTP
5. P&ID Drawings

1.2 GENERAL

A. Like items of equipment provided hereunder, although for different services, shall be the end products of one manufacturer in order to achieve standardization for operation, maintenance, spare parts, and manufacturer's service.

B. See the GENERAL CONDITIONS and Division 01, GENERAL REQUIREMENTS, which contain information and requirements that apply to the work specified herein and are mandatory for this project

C. All equipment shall be compliant with Federal Acquisition Register the clause 52.225-11, Buy American-Construction Materials under Trade Agreements (Nov 2023) and provision 52.225-12, Notice of Buy American Requirement-Construction Materials under Trade Agreements (May 2014).

1.3 SUBMITTALS DURING CONSTRUCTION

1. Submittals during construction shall be made as required in Section 013300, SUBMITTAL PROCEDURES in Division 01, GENERAL REQUIREMENTS. In addition, the following specific information shall be provided:
2. OPEN/CLOSE and THROTTLE actuators sizing calculations.
3. Complete information on the construction, performance and performance criteria, power requirements and wiring diagrams as applicable for each piece of power operated equipment. Submit each as a complete package.

1.4 MANUFACTURERS' SERVICES

A. A manufacturer's representative shall be present at the jobsite and/or classroom designated by the Owner for the minimum person-days listed for the services identified hereinunder, travel time excluded:
1. Two person-days per bid package for inspection of the installation of the power operated assemblies, functional testing, and certification that the assemblies have been installed and tested in accordance with the manufacturer's recommendations and these Specifications. Manufacturers' Certificates of Proper Installation shall be received and acknowledged by the Engineer prior to plant startup.

2. One person-day for training the Owner's personnel in the operation and maintenance of the equipment.

B. Startup services and training of Owner's personnel shall be at such times as requested by the Owner.

C. See Section 019113, GENERAL COMMISSIONING REQUIREMENTS.

PART 2 - PRODUCTS

2.1 GENERAL

A. All valves shall be complete, with all necessary operating appurtenances which are required for the proper completion of the work included under this section. The valve or gate manufacturers and actuator manufacturer shall coordinate to supply a completely functional system with factory mounted actuators and all necessary appurtenances.

B. The power operated equipment supplier is responsible for mating the actuators with the associated valves. The valve or gate supplier is responsible for providing actuator mounting flange. The actuator supplier shall supply the actuator mounting bolts and machine the actuator stem and nut to meet the valve or gate stem requirements.

C. The power operated equipment supplier shall provide written verification that the selected actuators are compatible with the selected valves and that the actuators are correctly sized.

D. All units shall have name of their manufacturer and the size of the valve cast on the body or bottom or shown on a permanently attached plate in raised letters.

E. Position indication shall be provided locally on all electric operated control valves by mechanical attachment or linkage to either the valve stem or the valve actuator. Electric actuators shall display valve position digitally on the display.

F. Valves which are furnished with equipment packages are not listed herein.

2.2 ACTUATOR MANUFACTURERS

A. The actuator equipment shall be furnished by one of the following manufacturers:
1. AUMA
2. Rotork
3. Or approved equal.

2.3 LIMIT SWITCHES

A. Limit switches shall be provided with, and mounted on the valve, where indicated hereinafter. Limit switches shall be single-pole, double-throw (SPDT) type, adjustable cam operated and rated either 10 to 15 amps at 120 volts ac or 5 milliamps to 5 amps at 120 volts ac.

B. Switch action shall be as specified. Limit switches or indication contacts shall be housed in a NEMA 4X enclosure or internal to the actuator housing, respectively, suitable for use in an industrial and corrosive environment; all switches in a single enclosure shall be prewired to an internal terminal strip. Limit switches shall be supplied by the actuator manufacturer.

C. Slide gate operators shall be equipped with double-acting geared limit switches and double-acting torque switches. Limit switches shall be geared directly to the operating gear train and shall be “in-step” at all times, whether in motor or manual operation. The geared limit switches shall be internally wired to stop the motor at the fully OPEN and fully CLOSED positions. Limit switches shall also be capable of reporting gate position. Torque switches shall be internally wired so that in the event of a mechanical overload in either direction, the motor will be stopped

D. Switches shall be similar to Honeywell Micro-Switch Compact LS Series; or equal.

2.4 ELECTRIC OPERATED OPEN/CLOSE AND MODULATING VALVES AND GATES

A. See Section 333723, STAINLESS STEEL SLIDE GATES for gate descriptions as referenced below.

B. See Section 400553, MANUAL VALVES-WWTP for valve descriptions as referenced by type under Valve Data hereinbelow.

C. Electric Actuators: The actuator(s) shall be furnished and sized by the supplier or manufacturer and shall be factory mounted. Actuators shall comply with AWWA C542. The actuator(s) shall be the electric motor gear train type consisting of motor controls, gearbox, geared limit switches, torque switches, Open-Close and Local-Off-Remote hand switches or push buttons, and manual override handwheel with declutching lever. The actuator(s) shall be capable of producing not less than 1-1/2 times the required operating torque. The actuator(s) shall be of the self-locking type and shall operate the valve from FULLY OPENED to FULLY CLOSED positions, or the reverse, in approximate times as follows:

1. Quarter turn valves 14-inch to 24-inch: 60 to 120 seconds
2. Quarter turn valves 30-inch to 42-inch: 150 to 210 seconds
3. Quarter turn valves 48-inch to 68-inch: 4 to 5.5 minutes
4. Quarter turn valves 3-inch to 12-inch: 30 to 60 seconds
5. Telescoping valves: 8-15 inches per minute

D. Motors shall be high torque, reversible type, totally enclosed, non-ventilated, 1800 rpm maximum, 480-volt, three-phase, 60-Hz, and shall have built-in thermal overload protection. Motor(s) shall be pre-lubricated and all bearings shall be of the anti-friction type. Peak amperage shall not exceed 15.0 amps without approval of the Engineer. Motors for Open-Close valve service shall be rated for no less than 60 starts per hour and a continuous run time rating of no less than 15 minutes at 104ºF. Motors for modulating valve service shall be rated for no less than 1200 starts per hour at 104ºF.

E. The gearbox shall be totally enclosed and gasketed with gears and shafts of heat-treated alloy steel or bronze, supported throughout by antifriction ball or roller bearings and permanently lubricated at the factory.

F. Provide electric actuators with NEMA 4X construction, suitable for use in an industrial and corrosive environment. All electric actuators installed in hazardous locations shall be explosion proof and suitable for Class 1, Division 2 classified areas.

G. House the internal components of actuators and related gear boxes in weather and corrosion proof metal enclosures. All actuators installed outside shall be capable for continuous operation between -22 degrees F and 150 degrees F. All actuators installed inside shall be suitable for continuous operation with operating temperatures between 32 degrees F and 140 degrees F.

H. Each actuator shall be capable of operating in any horizontal or vertical orientation. Local controls shall be electrically attached to actuator via plug and socket connection, or by other industry standard means. It shall be possible to re-position local controls at every 90 degrees, so that push buttons and indication lights will face the operator.

I. Manual Control: Each actuator shall be equipped with handwheel for manual operation, which shall include an automatic clutch to positively disengage the handwheel at any time the drive motor control is energized. Handwheel operator shall be designed in such a way that failure of the motorized gearing shall not prevent hand operation of the valves.

J. Automatic Control:
   1. Each electric actuator shall be equipped with an OPEN/CLOSE hand switch allowing for local control of the valve.
   2. Each electric actuator shall be equipped with a three position (LOCAL-OFF-REMOTE) hand switch. REMOTE allows the Plant Control System to control the valve position. LOCAL allows the OPEN/CLOSE hand switch to drive the valve to the desired position. OFF prevents the valve from moving in any direction.
   3. The actuator(s) shall be equipped with automatic double-acting geared limit switches or programmable contacts, and double-acting torque switches. Limit switches shall be geared directly to the operating gear train and shall be of the adjustable type capable of being adjusted to stop travel of the actuator at any point between FULLY OPENED and FULLY CLOSED positions. Provide Form C contacts for remote indication of valve OPEN and CLOSED status. The contacts shall be rated 5 to 10 amps at 120 volts ac, or 5 milliamps to 5 amps at 120 volts ac. Torque switches shall operate during the complete valve cycle to protect the valve from excessive loads met by obstructions in either direction of travel.
   4. Unless specifically noted otherwise, each electric actuator shall fail to the last position when the control function or power fails.
   5. Each actuator shall have a means of tracking valve position during a power outage or when operated manually without the need for an additional external power source. When power is restored or operation switched to remote control, the actuator must know the valve position and begin operating without additional adjustments.
   6. Required electrical signals for OPEN/CLOSE type electric actuators which are hardwired to the associated PLC are:
      a. Valve Open – Digital Output
      b. Valve Closed – Digital Output
      c. Actuator Local-Off-Remote switch in Remote position - Digital Output
      d. Valve Faulted – Digital Output
      e. Valve Open Command – Digital Input
      f. Valve Close Command – Digital Input
   7. Required electrical signals for Modulating type electric actuators which are hardwired to the associated PLC are:
      a. Valve Open – Digital Output
      b. Valve Closed – Digital Output
      c. Actuator Local-Off-Remote switch in Remote position - Digital Output
      d. Valve Faulted – Digital Output
      e. Valve Position Indication – Analog Output
      f. Valve Position Command – Analog Input

8. Provide a terminal board for field wiring for each actuator.
9. For all electric actuators which are not connected to the associated PLCs through ProfibusDP, digital inputs shall be rated for 120VAC signals. All digital outputs shall be relay type rated for 120VAC signals. All analog signals shall be 4-20mA.
10. Each actuator shall be equipped with an integral graphic LED display to indicate status parameters of the unit and be used for the unit setup and programming. The parameters setup shall be through selector knobs (Open/Close and Local-Off-Remote hand switches) or through a remote controller to ensure non-intrusive setting and commissioning.
11. Provide all additional data communication hardware and software required to configure, test and commission.

K. Valves for modulating service shall be controlled by a 4 to 20 mA dc signal. Modulating valves shall be furnished with a positioner to accept the 4 to 20 mA dc analog signal, compare it with the existing valve position via feedback potentionmeter and energize to open or close. Failure position on loss of control signal shall be field selectable to either “open,” “close,” or “last position.” Deadband shall be field adjustable between 0.5 percent and 5.0 percent of full valve range. Time delay (adjustable between 0.5 and 10 seconds), zero and span shall also be adjustable. Provide modulating valves with a 4 to 20 mA dc linear signal valve position transmitter for 0 to 100 percent travel.

L. Actuators shall be AUMA Series SQ for quarter-turn valves and Series SA for multi-turn gate operators; ROTORK equivalent models; or equal.

M. Other features may be allowable and will be considered during the submittal process. Features may include but not be limited to non-intrusive design, use of magnetic reed switches, battery backup power for integral electronic controls, and monitoring and diagnostics capabilities.

N. Aerobic Digester and EQ Aeration Butterfly Valves :
1. Valve Number(s):
   a. Hospital WWTP: FV-1720-01, FV-1720-02, FV-1720-03, FV-1720-04, FV-1720-05
   b. Hon-Dah WWTP: FV-2720-01, FV-2720-02, FV-2720-05
2. Quantity:
   a. Hospital WWTP: 5
   b. Hon-Dah WWTP: 3
3. Valve Data:

a.	Valve Type	Butterfly, V530
b.	Valve Size	4-inch
c.	Location	Outdoors on top of aerobic digester area
d.	Fluid	Air, max 10 psi, 180 degrees F
e.	Delta P Max.	8.0 psig at shutoff
f.	Flow Max.	200 scfm
g.	Flow Min.	10 scfm
h.	Power Supply	480V, 3 phase
i.	Control Signal	4-20 mA signals or Profibus (modulating)
j.	Actuator Type	¼ turn, modulating
k.	Failure Mode:	Last position
l.	Hazardous Location	Class1 Div2 (FV-1720-05, FV-2720-05)

O. UV Disinfection System Butterfly Valves:
1. Valve Number(s):
   a. Hospital WWTP: FV-1910-01, FV-1910-02, FV-1910-03, FV-1910-04
   b. Hon-Dah WWTP: FV-2910-01, FV-2910-02, FV-2910-03, FV-2910-04
2. Quantity:
   a. Hospital WWTP: 4
   b. Hon-Dah WWTP: 4
3. Valve Data:

a.	Valve Type	Butterfly, V500
b.	Valve Size	6-inch
c.	Location	Indoors in process room
d.	Fluid	Secondary effluent, 1-3 psi, 45-75°F.
e.	Delta P Max.	8.0 psig at shutoff
f.	Flow Max.	260 gpm
g.	Flow Min.	15 gpm
h.	Power Supply	480V, 3 phase
i.	Control Signal	Discrete signal (open/close)
j.	Actuator Type	¼ turn, open/close
k.	Failure Mode:	Last position
l.	Hazardous Location	None

P. Aerobic Digester Fill and Drain Plug Valves:
1. Valve Number(s):
   a. Hospital WWTP: FV-1700-01, FV-1700-02, FV-1700-03, FV-1700-04
   b. Hon-Dah WWTP: FV-2700-01, FV-2700-02
2. Quantity:
   a. Hospital WWTP: 4
   b. Hon-Dah WWTP: 4
3. Valve Data:

a.	Valve Type	Plug, V405
b.	Valve Size	6-inch
c.	Location:	Vaults in process and solids handling rooms
d.	Fluid	WAS/DS, 60 degrees F
e.	Delta P Max.	10 psi at shutoff
f.	Flow Max.	100 gpm
g.	Flow Min.	10 gpm
h.	Power Supply	480V, 3 phase
i.	Control Signal	Discrete signal (open/close)
j.	Actuator Type	¼ turn, open/close
k.	Failure Mode:	Closed
l.	Hazardous Location	Class1 Div2 (all valves)

Q. EQ Transfer Pump Discharge Plug Valves:
1. Valve Number(s):
   a. Hospital WWTP: FV-1220-01, FV-1220-02, FV-1220-03
   b. Hon-Dah WWTP: FV-2220-01, FV-2220-02

2. Quantity:
   a. Hospital WWTP: 3
   b. Hon-Dah WWTP: 2
3. Valve Data:

a.	Valve Type	Plug, V405
b.	Valve Size	4-inch
c.	Location:	Indoors in process room
d.	Fluid	WAS/DS, 60 degrees F
e.	Delta P Max.	10 psi at shutoff
f.	Flow Max.	100 gpm
g.	Flow Min.	10 gpm
h.	Power Supply	480V, 3 phase
i.	Control Signal	4-20 mA signals or Profibus (modulating)
j.	Actuator Type	¼ turn, modulating
k.	Failure Mode:	Last position
l.	Hazardous Location	None

R. Sewer Lift Station Bypass Manhole Gate Operators:
1. Gate Number(s): 1000-SDG-01, 1000-SDG-02
2. Quantity: 3
3. Valve Data:

a.	Gate Type	Slide gate, upwards opening
b.	Gate Width	12 inch
c.	Gate Travel	12 inch
d.	Location	Hospital Campus
e.	Fluid	Raw sewage
f.	Delta P Max.	4.5 psi
g.	Power Supply	480V, 3 phase
h.	Control Signal	4-20mA or Profibus (modulating)
i.	Actuator Type	Multi-turn, modulating
j.	Failure Mode:	Last position
k.	Hazardous Location	None

2.5 TAGGING REQUIREMENTS

A. Each actuator/valve or /gate assembly shall be provided with a 1-1/2-inch minimum diameter 16-gauge stainless steel or brass tag. Each tag shall bear the valve/gate number as shown hereinbefore and on the Drawings.

B. The tags shall be attached to the valves/gates by stainless steel wire or soldered split key rings so that the ring and tag cannot be easily removed. The tag shall bear the 1/4-inch die-stamped identification number.

PART 3 - EXECUTION

3.1 GENERAL

A. Before installation carefully clean valves of all foreign material, and inspect valves in OPEN and CLOSED positions. Install valves in accordance with these Specifications, Section 400553, MANUAL VALVES-WWTP, and in accordance with the manufacturer's written instructions.

B. Before installation carefully clean gates of all foreign material, and inspect gate operators in multiple positions using the manual operator. Install gates in accordance with these Specifications, Section 333723, STAINLESS STEEL SLIDE GATES, and in accordance with the manufacturer's written instructions.

3.2 VALVE ASSEMBLY

A. Insofar as practical, the valve and actuator assemblies shall be completely factory assembled and shipped as a unit. The parts and assemblies that are, of necessity, shipped unassembled shall be packaged and tagged in a manner that will protect the equipment from damage and facilitate the final identification and assembly in the field.

3.3 INSTALLATION

A. Refer to Section 400553, MANUAL VALVES-WWTP, and Section 333723, STAINLESS STEEL SLIDE GATES, for additional installation instructions for valves and gates.

B. The actuators shall be mated to their respective valves and gates according to manufacturer's recommendations. All mechanical stops, limit switches and/or torque switches shall be factory set unless otherwise specified.

C. Direct stem-actuated valve(s) shall be installed with the stem and actuator vertical above the pipe for horizontal pipe runs. Rotary diaphragm stem-actuated valves shall be installed with the actuator thrust line vertical, wherever possible. Actuator mounting adapters shall be provided to enable vertical installation, if available. Rotary piston stem-actuated valves shall be installed with the actuator mounted parallel to the pipe run.

D. Before installing the valve assembly in the piping system, verify the disc travel. Attach an appropriate electrical supply to the actuator and operate actuator from the FULLY OPEN to the FULLY CLOSED position several times and check valve positions. Perform the same checks for gate operation and position.

3.4 FUNCTIONAL TESTING

A. Prior to plant startup, all equipment described herein shall be tested for proper alignment, quiet operation, and proper communication with the Plant Control System (PCS). Tests shall demonstrate proper rotation of valve, proper closures of limit switches, proper operation of torque switches, proper failure mode, etc.

B. The manufacturer's representative shall commission the electric actuators to verify installation and make final travel limit and torque adjustments.

C. Refer to Section 400553, MANUAL VALVES-WWTP and Section 333723, STAINLESS STEEL SLIDE GATES for additional functional testing requirements of the valves and gates.

3.5 MANUFACTURER'S CERTIFICATE(S)

A. Provide manufacturer's certificate(s) in accordance with Section 019113, GENERAL COMMISSIONING REQUIREMENTS, of Division 01, GENERAL REQUIREMENTS.
   1. Certificate shall include report of field testing results.

END OF SECTION

SECTION 406110 – PROCESS INSTRUMENTATION AND CONTROLS SYSTEM (PICS) GENERAL REQUIREMENTS – WWTP

PART 1 - GENERAL

1.1 WORK INCLUDED

A. This section covers the general requirements necessary for all work on the Process Instrumentation and Controls System (PICS) for the Hospital WWTP and the Hon-Dah WWTP. This work also includes communication with the Building Automation Systems (BAS) at both WWTPs.

B. Related Work is specified in other Divisions and the Drawings:
   1. Division 23, HVAC-WWTP.
   2. Division 26, ELECTRICAL-WWTP.
   3. Division 27, COMMUNICATIONS.
   4. Division 40, PROCESS INTERCONNECTIONS-WWTP.
   5. Division 43, PROCESS GAS AND LIQUID HANDLING-WWTP.
   6. Division 46, WATER AND WASTEWATER EQUIPMENT-WWTP.
   7. Process & Instrumentation Diagrams (BP2 P&ID Drawings, BP3 P&ID Drawings)

1.2 GENERAL

A. Also see the GENERAL CONDITIONS and Division 01, GENERAL REQUIREMENTS, which contain information and requirements that apply to the work specified herein and are mandatory for this project.

B. It shall be the responsibility of the Contractor and the PICS sub-contractor to examine and refer to all architectural, civil, structural, mechanical, process, and/or electrical Drawings and specifications for construction conditions which may affect the scope of process instrumentation and controls work. Inspect the building site and existing facilities for verification of present conditions. Make proper provisions for these conditions in performance of the work and cost thereof.

C. Process instrumentation and controls work for this project shall include all items, articles, materials and the associated labor mentioned, scheduled or shown in specification Sections 4661XX and in the accompanying Drawings.

D. Furnish and install all equipment, materials and any required incidental items required by good practice to complete the systems described on the Drawings or in the project specifications.

E. All equipment shall be compliant with Federal Acquisition Register the clause 52.225-11, Buy American-Construction Materials under Trade Agreements (Nov 2023) and provision 52.225-12, Notice of Buy American Requirement-Construction Materials under Trade Agreements (May 2014).

F. Control panels and electronic communication devices must comply with all US Federal regulations.

1.3 REFERENCES

A. The Contractor shall take full responsibility for, and shall coordinate the work of, Division 01, GENERAL REQUIREMENTS, Division 26, ELECTRICAL-WWTP, Division 43, PROCESS GAS AND LIQUID HANDLING EQUIPMENT-WWTP, and Division 46, WATER AND WASTEWATER EQUIPMENT-WWTP with this Division 40 to guarantee a complete and finished installation of the electrical and instrumentation and control systems. The Division 40 instrumentation and control Drawings and Specifications are to be read together with Drawings and Specifications of all other Divisions and specifically Division 26, ELECTRICAL-WWTP. Additional information necessary to complete the work is included in other sections of the Drawings and Specifications.

B. All tables shown of the instrumentation and control Division 40 Drawings and Specifications are for information purposes only and may show partial lists of equipment and materials. A complete take-off from all Drawings and Specifications shall be done by the Contractor and PICS Sub-contractor to determine accurate quantities of equipment and materials.

C. The Division 40 instrumentation and control Drawings and Specifications contain references to the following documents. They are a part of this Division as specified and modified. In case of conflict between the requirements of this Division and those of the listed documents, the requirements of this Division shall prevail.
   1. National Electrical Code, latest revision.
   2. IEC 61508, Functional Safety of Electrical Safety-Related Systems.
   3. ISA RP7.1-56, Pneumatic Control Circuit Pressure Test.
   4. ISA RP12.6-87, Installation of Intrinsically Safe Systems for Hazardous (Classified) Locations.
   5. ISA S5.4-1991, Instrument Loop Diagrams.
   6. ISA S51.1, Process Instrumentation Terminology.
   7. NEMA 250, Enclosures for Industrial Controls and System.
   8. NEMA ICS 1, General Standards for Industrial Control and Systems.
   9. NEMA ICS 2, Industrial Control Devices, Controllers, and Assemblies.

D. Instrumentation and Control Qualifications:
   a. The Contractor and PICS Sub-contractor shall provide fully qualified journeyman instrumentation and electrical personnel capable of performing the requirements of this work. The work identified in this Contract also includes installation, testing, configuring, verification and commissioning of Ethernet based components of electrical and instrumentation and control systems.
   b. The Contractor shall provide evidence of suitability to complete the scope of work under this contract, e.g. similar completed projects, key project personnel resumes, and certificates of recognition.

E. Section 460754 includes Kubota Process and Instrumentation Diagrams (P&IDs). These P&IDs are preliminary. Final P&IDs will be prepared by the MBR Supplier during the submittal process. The final P&IDs shall become an integral part of these specifications.

1.4 GLOSSARY OF TERMS AND DEFINITIONS

A. Throughout these Contract Documents and instrumentation and control sections of Division 40, the following words and phrases and definitions are used:

AI/AO Analog Input/Analog Output.

DI/DO Digital Input/Output.

CP Control Panel – Same as Local Control Panel but supplied by the Equipment Vendor as a part of package supplied equipment and installed and commissioned by the Contractor. If specifically noted, the CPs are provided by the Contractor.

CTU Central Terminal Unit – Control Panel dedicated to overall control of the Wastewater Treatment Plant.

HMI Human Machine Interface – An industrial computer panel or operator interface terminal usually installed outside of a control room, which allows viewing of various process area real-time graphics, viewing alarms, changing of process parameters and modes and other operator control actions. The functionality of HMI is independent of the SCADA computers (servers/clients).

HSE High Speed Ethernet.

I/O Input/Output Signals.

LAN Local Area Network.

LCP Local Control Panel – Refer to Control Panel hereinbefore.

MCC Motor Control Center.

OIT Operator Interface Terminal (see HMI).

OPC OLE for Process Control (communication interface driver).

PCS Plant Control System – all automated process control components including SCADA/PLC, standalone controllers, Operator Interface Terminals etc. Same as SCADA.

PID Proportional, Integral, Derivative Process Control Actions.

PLC Programmable Logic Controller.

RAM Random Access Memory.

RVSS Reduced Voltage Soft Starter – Same as SSD.

SCADA Supervisory Control and Data Acquisition (also referred to in this context as PCS). A SCADA system includes controllers, processors, networks, SCADA computers, computer software user interface (SCADA software), communication equipment and communication protocols. A SCADA system monitors the entire plant process in real time.

SSD Soft Start Drive.

UPS Uninterruptible Power Supply.

VFD Variable Frequency Drive. Same as VFC, Variable Frequency Controller.

WAN Wide Area Network.

WWTP Wastewater Treatment Plant.

B. Provide: Shall mean that the so noted equipment is to be supplied, installed, connected, adjusted, calibrated, tuned, cleaned, commissioned and placed into full service.

C. Supply: Shall mean that the so noted equipment is to be purchased, assembled and shipped undamaged to the site. Where an item is supplied by the Owner, by others, or by another Division, the work of mounting and connecting and commissioning of the item shall be included in the Contract unless specifically otherwise noted.

D. Install: Shall mean to put the specified item into full operation, securely fastened and connected to the system. The Contractor shall provide all work and material which is necessary to securely fasten and give a presentable finished appearance including all necessary connections and conductors. Such noted equipment must be wired, fully calibrated and tested.

E. Approved: Shall mean that the so noted equipment is to be officially accepted by the Engineer prior to ordering, fabrication and installation.

F. Coordinate: Shall mean to make all arrangements directly with agencies, individuals and other trades, confirm schedules, be in attendance at the time work is carried out, take full responsibility for having the work carried out correctly and in a timely manner to meet the construction schedule.

G. Field Wiring: Shall mean all labor and material necessary to connect all instrumentation and control devices and equipment, both discrete and analog, regardless of voltage and current, and all power supply wiring other than 120 Volts AC power supply wiring and shall also include all interconnecting cables between portions of the system.

H. Communication Wiring: Shall mean all work and material required for connection of control data communications including but not limited to Ethernet communications.

I. System Integration: The PLC, HMI and SCADA setup and programming, testing of the plant control system software and components to merge their functional and technical characteristics into a comprehensive, interoperable system, and allow for process data sharing and access across the complete SCADA.

1.5 INSTRUMENTATION AND CONTROL (I&C) SUB-CONTRACTOR

A. All the work of providing the Process Instrumentation and Controls System (PICS) shall be carried out by a single firm regularly engaged in the provision of plant instrumentation and control systems. The “PICS Sub-contractor” (and where applicable, System Integrator) shall mean a single firm under direct subcontract and direction of the Contractor, which shall assume complete responsibility for engineering, furnishing, and installing the complete PICS System. To ensure adequate service and support for plant operation, the PICS Sub-contractor shall be able to demonstrate prior experience in manufacturing and installing industrial control systems, and be a licensed contractor in the State of Arizona.

B. The PICS control panel builder shop shall be UL 508A certified.

C. System Integration for the project shall be provided by the PICS Sub-contractor as part of the scope of the PICS Sub-contractor.

D. The Contractor shall be ultimately responsible and shall provide for the supply, installation, certification, adjustment and start-up, all by the PICS Sub-contractor, of a complete, coordinated system that shall reliably perform the intended functions.

E. The PICS Sub-contractor shall make all final power and signal connections to all elements provided under instrumentation and control sections of this Division and other instrumentation and control equipment supplied by the Contractor, Owner, and/or by others. For all elements provided under this Division, and all elements interfaced by the PICS, the PICS Sub-contractor shall verify and certify by written notice to the Engineer, correctness of final signal connections and correctness of adjustment:
   1. For each digital input, check complete circuit by actually operating the source device or instrument and confirming that the signal is received at the appropriate PLC input.
   2. For each analog input, check operation of the complete circuit by actually operating the source device or instrument, or where this cannot be done due to process conditions by connecting a loop calibrator at the field end (instrument position) and confirm that the signal is received at the appropriate PLC input. Where possible, vary the signal through its full range.
   3. For each digital output, using a PC with appropriate software, connect to the associated PLC and force the output into the off and on states and confirm correct operation of the associated field device.
   4. For each analog output, using a PC with appropriate software, connect to the associated PLC and force the analog output through its full range and confirm correct operation of the associated field device.
   5. Provide a checklist that can be used with each loop or circuit checked off by the PICS Sub-contractor prior to start of commissioning.
   6. Before performing tests, confirm that no risk to personnel or equipment exists. If the test cannot be carried out, advise the Engineer.

F. The PICS Sub-contractor shall obtain, from the Contractor, the required information on those primary elements, valves, valve actuators, and other control equipment or devices that are required to be interfaced with, but that are not provided under this Division.

G. The PICS Sub-contractor shall coordinate his work with the Contractor to ensure that:
   1. All instruments, wiring, and other components to be provided by the PICS Sub-contractor under this Division are properly installed and interfaced with other system components.

2. All instruments, wiring, and other components to be supplied by others under this Contract are properly installed and interfaced with other system components.
3. The proper type, size, and number of control wires with their conduits are provided.
4. Proper electrical power circuits are provided for all components and systems.
5. All work is coordinated with the work of other Divisions.

1.6 CODES, STANDARDS, AND REGULATIONS

A. Work shall meet the requirements of the Drawings and specifications and shall not be less than the minimum requirements of applicable sections of the latest codes, standards, and regulations of the organizations summarized below.

B. Codes: Perform all work in strict accordance with all applicable national, state and local codes; including, but not limited to latest legally enacted editions of following codes:
1. NFPA 70, National Electric Code (NEC).
2. NFPA 72, National Fire Alarm Code.
3. ANSI-C2, National Electrical Safety Code (NESC).
4. International Building Code (IBC).
5. International Fire Code (IFC).
6. International Energy Conservation Code (IECC).

C. Standards: Reference to standards infers that installation, equipment and materials shall be within limits for which it was designed, tested and approved, in conformance with current publications and standards of following organizations:
1. American National Standards Institute (ANSI).
2. American Society for Testing and Materials (ASTM).
3. American Society of Heating Refrigerating and Air Conditioning Engineers (ASHRAE).
4. Illuminating Engineering Society of North America (IES).
5. Institute of Electrical and Electronics Engineers (IEEE).
6. Insulated Cable Engineers Association (ICEA).
7. International Organization for Standardization (ISO).
8. International Electrotechnical Commission (IEC).
9. Instrumentation Systems and Automation Society (ISA).
10. National Electrical Contractors Association (NECA).
11. National Electrical Manufacturers' Association (NEMA).
12. National Fire Protection Association (NFPA).
13. Occupational Safety and Health Administration (OSHA).
14. Underwriters' Laboratories, Inc. (UL).
15. Rules and Regulations of the State/Local Fire Marshal.
16. Standards and Requirement of the Serving Utilities.
17. State and Local Ordinances, Laws, and Statutes.

D. Where such listing is available, electrical materials used in this work shall be listed by the UL or other Nationally Recognized Testing Laboratory (NRTL) as defined in OSHA Regulation 1910.7, and shall bear a UL or NRTL label.

1.7 FEES AND PERMITS

A. The Contractor or PICS Sub-contractor shall pay all fees and arrange all permits required for work done under their contract and under their supervision by sub-contract. Fees shall include any or all user fees, government fees, system development fees, connection fees or other fees that are required to be paid before systems can be connected or used.

B. Schedule all required electrical inspections with local electrical inspector. Notify the Engineer of all items of discrepancy noted by electrical inspector if those items affect cost or function of system, or if they conflict with electrical or instrumentation and control Drawings and specifications.

C. Deliver all inspection certificates to the Engineer prior to final acceptance of the work.

1.8 INTENT OF DRAWINGS AND SPECIFICATIONS

A. The Drawings are partly diagrammatic and do not necessarily show routing of conduits, location of products, or installation features in exact detail. The locations of devices, fixtures, panels, connections, and equipment are approximate unless specifically dimensioned.

B. Riser diagrams and control schematics are not to scale and do not necessarily show the physical arrangement of the equipment. They shall not be used for obtaining lineal runs of conduit or cabling distances.

C. The Drawings and specifications are intended to result in a complete PICS installation in full compliance with all applicable codes, standards and ordinances.

D. The Drawings and specifications are to supplement each other and any details contained in one shall be included as if contained in both.

E. The instrumentation and control Drawings shall serve as working drawings, but the architectural and/or structural Drawings shall take precedence if any dimensional discrepancies exist.

F. Items are shown on the Drawings in locations to minimize interference with other equipment, structural members, etc. Exact finish locations are not indicated, however, and all work shall be done to avoid interference, preserve headroom and keep openings and passageways clear.

G. Discrepancies shown on different Drawings, or between the Drawings and actual field conditions, shall be brought to the attention of the Engineer for resolution. In event that discrepancies of any kind exist or required items/details have been omitted, the Contractor shall notify the Engineer in writing of such discrepancy or omission at least ten days prior to the bid date. Failure to do so shall be construed as willingness of the Contractor to supply all necessary materials and labor required for proper completion of the work.

H. The installation details, instructions, and recommendations of the manufacturer of the product used, or modified to obtain the best end result, shall be the basis of attaining installation of the products for usage on this project except where definite and specific instructions are set forth herein or details are shown on the Drawings.

1.9 RESPONSIBILITY AND REQUIREMENTS OF THE WORK

A. All instrumentation and control work shall conform to the requirements of all appropriate Division 40, PROCESS INTERCONNECTIONS-WWTP instrumentation and control specifications. Comply with all laws, ordinances, rules, regulations, codes, and orders of all authorities having jurisdiction relating to this work.

B. Qualifications:
   1. The Contractor and PICS Sub-contractor shall employ on this project, capable, experienced and reliable foreman and such skilled workmen as may be required for various classes of work to be performed.
   2. Where special skills and certification are required, the Contractor and PICS Sub-contractor shall ensure that work is performed by individuals with required experience, skill and certification.
   3. If, in Engineer's opinion, the Contractor's or PICS Sub-contractor’s employees do not possess necessary qualifications to perform specialty work, the Contractor will be required to obtain services of workmen who are approved by manufacturer and certified by applicable agency or group. These workmen, if required, shall be provided at no additional expense.
   4. Refer to other specification sections for additional required Contractor and/or PICS Sub-contractor qualifications and certification.

C. The Contractor and PICS Sub-contractor shall be responsible for the installation of a satisfactory and complete system in accordance with the intent of the Drawings and specifications. Provide at no extra cost all incidental items, materials, accessories and labor required for completion of the work even though they are not specifically mentioned or indicated on the Drawings or in the specifications.

D. The Drawings do not attempt to show complete details of the building construction which affect the instrumentation and control installation; and reference is therefore required to the architectural, civil, structural, landscape, process, electrical, and mechanical Drawings and specifications and to shop drawings of all trades for additional details which affect the installation of the work covered under these Divisions of the Contract Documents.

E. The Contractor and the PICS Sub-contractor shall all coordinate and plan their work to proceed with the work of all other trades.

F. All work done shall meet or exceed all Health and Safety requirements applicable for the Owner, the State of Arizona, and the United States. The PICS Subcontractor and its workers must carry out their individual responsibilities to provide a safe work place. Refer to the Standard General Conditions of the Construction Contract.

G. The PICS Subcontractor shall comply with all directives from the Contractor. In a case of an emergency, the PICS Subcontractor and the System Integrator shall follow all applicable Contractor and Owner protocols and comply with the Contractor’s instructions and orders. The wastewater treatment plant must remain in service and emergency responses to maintain operations will take precedent over project work.

H. The Contractor shall be ultimately responsible and shall provide for the supply, installation, certification, adjustment, tuning and start-up and commissioning of a complete, coordinated system that shall reliably perform the intended functions.

I. Supply, install, commission, and provide a warranty for the complete and fully documented instrumentation and control system as specified hereinafter. The instrumentation and control system contains packaged equipment, component subsystems and appurtenances specified in this and other sections of the Specifications.

J. The Work includes all hardware, software, labor and services necessary to provide a fully functional, coordinated control system for the entire plant. Supply and install all items and accessories specified by the Drawings or the Specifications in the quality and quantity required. Perform all operations as designated by the Specifications according to the methods prescribed, complete with all necessary labor and incidentals.

K. Refer to Section 406115, PICS SCOPE OF WORK-WWTP for the summary of the scope of instrumentation and control work under this Contract. Refer to all other Drawings and Specifications for the complete scope of the Instrumentation and Controls work.

L. Where packaged, stand-alone control systems are supplied under other Divisions of this Contract, coordinate and ensure Submittal Drawings, Motor Control Schematics, Instrument Specification Sheets (ISS), and Control Wiring Drawings are provided in accordance with the requirements of this section and in accordance with the Instrumentation and Control Drawings.

M. Where modifications are made to packaged systems, stand-alone control systems, or other Contractor supplied equipment under other Divisions of this Contract, and the modifications are due to vendor or Contractor changes to the systems in question, the systems may be considered acceptable provided:
   1. The proposed system and/or its modifications satisfy the intent of the Specifications.
   2. The changes or modifications combined for all aspects of work by all trades do not result in a cost addition to the Contract.
   3. The systems are approved by the Engineer.

N. Where packaged, stand-alone equipment with control systems are pre-purchased by the Owner or supplied under other Sections and/or Divisions of this Contract, provide all necessary labor, material and cabling to install and connect the equipment to the required remote monitoring and/or control functions. Coordinate and provide all supplies to complete end-to-end commissioning of all required remote monitoring and/or control functions. Ensure the correct functionality of any equipment supplied under other Divisions.

O. The Contractor's responsibility also includes receiving, uncrating, examining for shortages or damage, assembling, field fitting, installing, mounting, wiring and testing of vendor supplied component subsystems.

P. All software, field devices, wiring and local control panels not specifically defined as supplied by others shall be provided under this Contract.

Q. Compliance:
   1. Failure to comply with the Drawings and Specifications shall be cause for rejection of the work and the Contractor shall be required to make all required changes to comply with the Drawings and Specifications at no additional cost to the Owner or their agents and representatives.

2. Where a conflict exists between any applicable code, regulation, directives, standard, or manufacturer's recommended practice for any item and what is shown on Drawings or specified, seek clarification from the Engineer prior to submitting bid or allow for the most expensive alternative.

R. Where packaged, stand-alone control systems are supplied under other Divisions of this project or by the Owner, provide cabling to connect to the required remote monitoring and/or control functions. Install and wire equipment and provide end-to-end commissioning of all required remote monitoring and/or control functions. Ensure the correct functionality of any equipment supplied under other Divisions of this Specification. Wiring diagrams and information on cables, terminations and PCS interface requirements for package systems supplied under other Divisions of this Contract shall be provided as part of the construction submittal process.

S. Documentation provided by the Contractor and PICS Sub-contractor shall be submitted in paper and electronic (AutoCAD and PDF) format and shall include but not be limited to:
1. Equipment descriptive data.
2. Equipment installation, service manuals, operation/ maintenance manuals and recommended spare parts lists.
3. Records of conductor identification, field terminals, changes, etc.
4. Instrumentation and control panel Shop Drawings, face layouts, schematics and point-to-point wiring diagrams.
5. Records of as-built information for the complete instrumentation system.

T. Documentation for Record Drawings provided by the PICS Subcontractor to the Contractor shall include the following:
1. P&IDs – depict the general intent of the control systems and are to be used as the governing document for the scope of work.
2. Control System Architecture Drawings – showing connection diagram between major I&C system components, including Ethernet Cat6 and wireless networks.
3. Instrument Index – a sorted index of the detailed information for the devices shown on the P&IDs. The index lists the appropriate support documentation for the devices' supply and installation.
4. PLC Input/Output List – a sorted index of the PCS (Plant Control System) database and I/O points shown on the P&ID's and other Drawings and Specifications.
5. PLC wiring diagrams.
6. Instrument Specification Sheets - detail the relevant data for the supply of instrument devices.
7. Typical Instrument Loop Diagrams (ILDs) – showing interconnections and hook-up of devices with conventional I/Os and conduit requirements. The Contractor is to produce an ILD for each device and record all relevant as-built information on each sheet for submission at the completion of the work. Fill in all terminal and wiring numbers etc. from the Shop Drawing as they become available.
8. Location Drawings – indicates in plan and/or elevation views where the instrument elements and any other control system components are physically located. These Drawings are provided to assist the Contractor in locating the devices.
9. Instrument Standard Details (ISD) – provide a reference for installation, mounting, and other instructions pertinent to a particular type device including typical marshalling panel layout Drawings.

10. Detailed Specification – lists qualifications, quality of materials and workmanship, and supplementary information.

U. At all times during the performance of this Contract, properly protect work from damage and protect the Owner's property from injury of loss. Make good any damage, injury or loss, except such as may be directly due to errors in the Contract Documents or caused by agents or employees of the Owner. Adequately protect adjacent property as provided by law and the Contract Documents. Provide and maintain passageways, guard fences, lights and other facilities for protection required by public authority or local conditions.

V. The Contractor shall be ultimately responsible for damages incurred due to the work of their sub-contractors, to the building or its contents, people, equipment, and other items.

1.10 REVIEW

A. All work and materials are subject to review at any time by the Owner, Engineer, or their representative(s). If the Owner, Engineer, or their representative finds any material that does not conform to these specifications or that is not properly installed or finished, correct the deficiencies in a manner satisfactory to the Owner or Engineer at the Contractor’s or PICS Sub-contractor’s expense.

1.11 SUBMITTALS AND DOCUMENTATION

A. Submittals will be required as specified in Section 013300, SUBMITTAL PROCEDURES and hereinafter for each piece of equipment, material, or product as noted in individual specification sections. All submittals shall be submitted, reviewed, and all discrepancies addressed prior to ordering equipment or starting work. Any equipment ordered without having first completed the submittal process is done at the risk of the Contractor and PICS Sub-contractor. Any work performed prior to completing the submittal process is done at the risk of the Contractor and PICS Sub-contractor.

B. Intent of Drawings and Specifications:
   1. Supply and install all items and accessories specified by the Drawings or the Specification in the quality and quantity required. Perform all operations as designated by the Specifications according to the methods prescribed, complete with all necessary labor and incidentals.
   2. Treat any item or subject omitted from this Division's Specifications or Drawings, but which is mentioned or specified in other Divisions' Specifications or Drawings and pertains to the instrumentation and control system, as being integral to the overall system. Provide such specified items or subjects.
   3. Provide all minor items and work not shown or specified but which are necessary to complete the work.
   4. If discrepancies or omissions in the Drawings or Specifications are found, or if intent or meaning is not clear, consult the Engineer for clarification before submitting a bid. If a ruling has not been requested, the Contractor shall allow in the bid price for the more expensive alternative.
   5. The responsibility to determine which Division provides various products and work rests with the Contractor. Additional compensation will not be considered because of differences in interpretation of Specifications.

C. Submittal Definitions:
   1. Product Data: Provide manufacturers' cut sheets that include general product information including but not limited to, model number, physical data, nominal capacities, and rough-in requirements.
   2. Performance Data: Provide detailed performance and capacities based on project specific requirements.
   3. Shop Drawings: Provide detailed drawings of the equipment showing overall dimensions, location of electrical connections, location of anchorage points, location of electrical and control panels, and all operating, service, and maintenance clearances.
   4. Delegated Design: Provide detailed drawings prepared and stamped by a registered Professional Engineer that detail pertinent design criteria, the materials and products to be installed, and the required installation locations.
   5. Wiring Diagrams: Provide diagrams that identify and detail required field wiring.
   6. Ladder Logic: Provide ladder diagram for the PCS PLC to show all functions.
   7. Color Charts: Provide a physical color chart of material samples required for selection of equipment colors.

D. Submittal Formats:
   1. Include the following information with each submittal:
      a. Project Name.
      b. Submittal Date.
      c. Name of Architect.
      d. Name of Engineer.
      e. Name of General Contractor.
      f. Name of Sub-Contractor.
      g. Name of firm or entity that prepared the submittal.
      h. Unique Submittal Number.
      i. Type of Submittal.
      j. Specification Section.
      k. Name or mark of equipment or material and detail or Drawings reference.
   2. All submittals, with the exception of color charts or material samples, shall be electronically transmitted PDFs.

E. Submittal Requirements:
   1. Submittals shall be complete, clearly show item used, size, dimensions, capacity, rough in, and other items as required for a complete check and installation. Manufacturer's literature showing more than one item shall be clearly marked as to which item is being furnished or it will be rejected and returned without review.
   2. Each submittal shall be thoroughly checked by the Contractor and PICS Sub-contractor for compliance with the Contract Document requirements, accuracy of dimensions, relationship to the work of other trades, and conformance with sound, safe practices as to erection and installation. Each submittal shall then bear a stamp evidencing such checking and shall show corrections made, if any. Submittals requiring extensive corrections shall be revised before submission. Each submittal not stamped and signed by the Contractor and PICS Sub-contractor evidencing such checking will be rejected and returned without review.
   3. On each submittal, clearly indicate deviations from requirements in the Contract Documents, including minor variations and limitations. Include relevant additional information and revisions, other than those requested on previous submittals. Indicate by highlighting on each submittal or noting on attached separate sheet.

4. The general list of items and equipment for which submittals and/or shop drawings are to be provided includes, but is not limited to:
   a. Required UL certification for Control Panel Builder Shop.
   b. New Local Control Panels – Engineered shop drawings and ladder diagrams.
   c. Modifications to Existing Local Control Panels – Engineered shop drawings.
   d. Instrumentation Equipment – including instrument Specification sheet and instrument loop Drawing for each device prespecified in Section 406171, INSTRUMENT SPECIFICATIONS-WWTP.
   e. PLC equipment including all hardware, software and associated control panel assemblies.
   f. Terminals.
   g. Indication Lights.
   h. Relays.
   i. Terminal and Wire Marking System.
   j. 24 Volt DC power supplies.
   k. UPS devices.
   l. Surge Protectors.
   m. Ethernet Switches, cables and accessories.
   n. Industrial Wi-Fi hot spot equipment (radio, antenna, cables, PoE injector).
   o. Operator Interface Panel.
   p. Provide a detailed list of labels for all instruments and local control panels. The list should include the label material, sizes, label letter sizes, tag number and identification description for Engineer review and approval.
   q. PCS Computer and Monitors.
   r. PCS (SCADA) Software.
   s. Digital Outputs Isolation Relays.
   t. 4-20mA Analog Inputs Surge Protectors.
   u. 4-20mA Analog Inputs Loop Isolators.
   v. Point to Point Wireless Remote I/O c/w antennas, cables and surge protectors.
   w. GE VHF Industrial Ethernet Radios c/w antennas, cables and surge protectors.
5. The submittals and shop drawings are to be submitted as one complete set for the Engineer review. Multiple and incomplete submissions will not be reviewed.
6. Provide engineered shop drawings for all Contractor supplied control panels. The engineered shop drawings shall include but not be limited to: inside and outside control panel layouts, wiring schematics, 120VAC and 24VDC control panel power distribution, wiring terminals, point to point wiring diagrams, PLC input/output wiring diagrams, Ethernet switches connections, and detailed bill of material (BOM).
7. The Engineer will review the submittals and shop drawings for the equipment which deviates from the original Specifications only after the Contractor provides a written explanation that each substitution complies with at least one of the following criteria:
   a. The specified equipment is no longer available.
   b. The proposed alternative equipment has more advanced technical characteristics than the specified equipment and it will be provided without contract price increase.

c. The proposed alternative equipment has same technical characteristics as the specified equipment but brings significant cost savings to the Owner.
d. The proposed alternative equipment carries significant construction cost savings for the Owner.

8. Keep one complete, maintained set of submittals and shop drawings at the job site during the construction period, record site modifications.

F. Review of the shop drawings and literature by the Engineer shall not relieve the Contractor and/or sub-contractors for responsibility for deviations from the Drawings or specifications, nor shall it relieve the Contractor and/or sub-contractors from responsibility for errors in the shop drawings or literature. It is the responsibility of the Contractor and their sub-contractors to provide materials and equipment which meet the specifications and job requirements.

G. The Engineer's submittal review is for general design and arrangement only and does not relieve the Contractor or sub-contractors from any requirements of the Contract Documents. Submittals will not be checked for quantity, dimension, fit or proper technical design of manufactured equipment. Where product or system performance deviations have not been specifically noted in the submittal by the Contractor, Engineer's review will not relieve the Contractor's responsibility to provide a complete and satisfactory working installation of equal quality and performance to the specified system. Ordering, manufacture, shipment or installation of equipment prior to receipt of Engineer's written review is strictly at the Contractor's risk and all costs associated with shipping, changes, replacement or restocking shall be the Contractor's responsibility.

1.12 OPERATION AND MAINTENANCE (O&M) MANUALS

A. Operation and Maintenance Manuals shall conform to the requirements of Section 017823, OPERATION AND MAINTENANCE DATA. In addition, they shall specifically contain the following items at a minimum:
1. Names and contact information for the Project Architect and Project Engineer.
2. Names and contact information for the General Contractor.
3. Names and contact information for sub-contractors.
4. Installation, maintenance, and operating instructions for each piece of equipment.
5. Parts lists.
6. Wiring diagrams.
7. Equipment start-up and inspection certificates.
8. Test Reports.
9. Commissioning Reports.
10. Copies of equipment warranties.
11. Copies of submittals.
12. Record Drawings.
13. Training CDs.

B. Submit a final instrument list with accurate loop drawing numbers for each instrument which has the associated loop drawing.

C. Submit a Plant Control System Application Manual written by the Contractor and PICS Subcontractor specifically for this project.

D. Prior to substantial completion, submit an electronic copy of the O&M Manuals in PDF format to the Engineer and Owner for review and approval. The PDF shall be one file with an index and hyperlinks to each section. Individual bound PDFs without automated navigation will be rejected. All O&M data shall be grouped by the equipment type and ordered by the specification numbering.

E. Prior to final payment, a final electronic copy of the O&M Manuals on an archival quality DVD as well as two printed copies shall be furnished to the Engineer for the Owner. Printed copies shall have commercial quality 8-1/2-inch x 11-inch three-ring binders with tabbed dividers for each section.

1.13 RECORD DRAWINGS

A. Record drawings shall be prepared and submitted as specified in Section 017839, PROJECT RECORD DRAWINGS and as specified hereinafter.

B. The Contractor and the PICS Sub-contractor shall furnish to the Owner and Engineer a marked print showing the location of all concealed or underground cable or conduit runs and other equipment installed other than as shown on the Drawings. Dimension underground lines from established building lines. Indicate all installed pull boxes in conduit runs. In addition, indicate installed conditions for the following:
   1. Size and location of instrumentation cable and control tubing systems.
   2. Locations of control devices, equipment, and panels.
   3. Equipment and instrument locations, referenced to major building lines.
   4. Actual equipment and materials, where substituted.
   5. Other information including:
      a. Schematics and interconnecting wiring diagrams.
      b. The recording of conductor identification, field terminals, on the Instrument Loop Drawings (ILD) provided as part of this Specification or by others as it relates to the equipment with this scope of supply.
      c. All control panels engineered shop drawings, complete with terminals, inside and outside panel layouts, wiring schematics, point to point wiring diagrams, PLC input/output wiring diagrams, Ethernet switches connections and detailed bill of material (BOM).
      d. Ethernet networks control system architecture drawings complete with wiring identification numbers.
      e. Plant Control System Application Manual – written by the Contractor.

C. The Contractor and the PICS Sub-contractor shall furnish to the Engineer a marked print showing the location of all instrumentation and control equipment, fixtures, conduit, panels, and other similar items installed on this project. The location of any item which deviates from the Contract Documents shall be accurately drawn and dimensioned.

D. All underground or non-exposed conduit and cabling shall be dimensioned from the nearest column and/or exterior walls. The location of all maintenance related items, such as panel access doors and similar items shall be highlighted on the record drawing.

E. Provide wiring diagrams for all individual control and communications systems as installed. Identify all components and show all wire and terminal numbers and connections.

1.14 WARRANTY AND GUARANTEES

A. Unless specified otherwise in individual specification sections, the Contractor and the PICS Sub-contractor shall warrant all components of the instrumentation and control system against defects in workmanship and materials for one year from the date of Substantial Completion.

B. The Contractor and the PICS Sub-contractor shall guarantee that all materials and labor installed are new and of first quality and that any material or labor found defective shall be replaced without cost to the Owner within the above specified warranty period. The guarantee shall list the date of the beginning of the warranty period, which shall be the date that the Substantial Completion Certificate is issued.

C. Any damage to the building(s), caused by defective work or materials of the Contractor or their sub-contractors within the above-mentioned period, shall be satisfactorily repaired without cost to the Owner.

D. The guarantee does not include maintenance of equipment. The Owner will accept full responsibility for proper operation and maintenance of equipment immediately upon substantial completion and occupancy of the building.

E. Final acceptance by the Owner will not occur until all operating instructions are mounted in equipment rooms designated by the Owner and Owner's operating personnel are thoroughly trained in the operation of all instrumentation and control equipment by the Contractor and/or subcontractors.

PART 2 - PRODUCTS

2.1 MATERIALS AND EQUIPMENT GENERAL REQUIREMENTS

A. Manufacturer's trade names and catalog numbers listed are intended to indicate the quality of equipment or materials desired. Manufacturers not listed in the instrumentation and control specifications will be considered substitutions and must have prior approval.

B. See the GENERAL CONDITIONS and Division 01, GENERAL REQUIREMENTS for substitution procedures. Requests for substitution are to be submitted sufficiently ahead of any deadline, to give ample time for examination. Prior approval request for substitution must indicate the specific item or items to be furnished in lieu of those scheduled, together with complete technical and comparative data on scheduled items and items proposed for substitution.

1. Where substituted equipment requires structural, architectural, mechanical, plumbing or electrical work that differs from the basic design, the cost of all changes, including re-design, shall be the responsibility of the Contractor or PICS Sub-contractor using the substitution.
2. The design has generally been based on the use of the first named product, where applicable equivalent products are listed they must meet all functional requirements of the first named product.
3. The alternate submission shall provide sufficient information to enable the Engineer to determine whether the alternate is acceptable or unacceptable.
4. Provide complete information on required revisions to other work and products to accommodate each alternate product.

5. The Contractor assumes full responsibility when providing alternative products or materials that all space, weight, connections, performance, power and wiring requirements etc. are considered and compensated for. Any costs incurred for additional components, changes to other services, structural or space requirements, layouts and plans, etc. that may arise from the use of the alternate shall be borne by the Contractor.
6. Materials or equipment rejected by the Engineer shall be immediately removed from the project.

C. Approved Manufacturers: In general, at least one particular manufacturer and part number or series is listed to describe equipment. Equivalent equipment of other manufacturers listed for that item may be substituted. It shall be the Contractor's and the PICS Sub-contractor's responsibility to ensure that the item used for bidding purposes is truly equivalent to that specified. If it is not equivalent, it will be rejected at shop drawing review and the Contractor shall supply the specified item at their own cost.

D. Electrical and instrumentation equipment may be installed with the manufacturer's standard finish and color except where specific color, finish, or choice is indicated. If the manufacturer has no standard finish, equipment shall have a prime coat and two finish coats of gray enamel. Local control panel enclosures color shall be ANSI Gray 61. Where touch-up or repainting is required, use paint obtained from the equipment manufacturer, exactly matching the original finish.

E. High Altitude Operation: Capacity of all equipment shall be sized and manufactured to perform at the elevation of the project site. If not specifically indicated in the equipment schedule or in the specifications, provide all required accessories and equipment for proper operation at the elevation of the project site. The elevation of the Hospital WWTP is 5,630 feet. The elevation of the Hon-Dah WWTP is 7,160 feet.

F. The Contractor and the PICS Sub-contractor shall be responsible for materials and equipment installed under this contract. Contractor and sub-contractors shall also be responsible for the protection of materials and equipment of others from damage as a result of their work.

G. Quality of Products:
1. All products provided shall be Underwriters' Laboratory (UL) approved.
2. If products specified are not UL approved, obtain approval of the relevant provincial regulatory authority. Pay all applicable charges levied and make all modifications required for approval.
3. Products provided, if not specified, shall be of a quality best suited to the purpose required and their use is subject to approval by the Engineer.
4. Provide new materials, equipment and articles incorporated in the work, not damaged or defective and of the best quality (compatible with Specifications) for the purpose intended. If requested furnish evidence as to type, source, and quality of products provided.
5. Defective materials, equipment, and articles whenever found may be rejected regardless of previous inspection. Inspection by the Engineer does not relieve the Contractor of his responsibility, but is merely a precaution against oversight or error. Remove and replace defective materials at the Contractor's expense and be responsible for all delays and expenses caused by rejection.
6. Unless otherwise indicated in the Specifications, maintain uniformity of manufacturer for any particular or like item throughout the project.

7. Permanent labels, trademarks and nameplates on materials, equipment and articles are not acceptable in prominent locations except where required for operating instructions and when located in mechanical or electrical rooms.
8. Immediately upon signing the Contract, review product requirements and anticipate foreseeable delivery delays in any items. If delays in deliveries of materials, equipment or articles are foreseeable, propose substitutions or other remedial action in ample time to prevent delay in performance of the work.
9. To receive approval, proposed substitutes must equal or exceed the quality, finish and performance of those specified and/or shown, and must not exceed the space requirements allotted on the Drawings.

H. Uniformity of Manufacture:
1. Unless otherwise specifically called for in the Specifications, uniformity of manufacture shall be maintained for similar products throughout the work.

I. Manufactured materials and equipment shall be applied, installed, connected, erected, used, cleaned and conditioned as directed by the manufacturer unless herein specified to the contrary.

J. Store materials and equipment indoors at the job site. If this is not possible, store on raised platforms and protect from the weather by means of waterproof covers. Coverings shall permit circulation of air around the materials to prevent condensation of moisture. Screen or cap openings in equipment to prevent the entry of vermin.

K. Use of Products during Construction:
1. Any equipment used for temporary or construction purposes shall be approved by the Engineer and in accordance with Division 01, GENERAL REQUIREMENTS of this project. Clean and restore to "as new" condition all equipment prior to the time of substantial completion.
2. The warranty period does not begin until the date of substantial completion of the work.

2.2 IDENTIFICATION AND LABELING

A. Provide lamacoid nameplates with white lettering on black background. Identify the equipment tag number and the device name, and function on the nameplate.

B. Where it is not possible to attach a lamacoid nameplate to a field instrument component, provide the component with a stainless steel metal tag firmly wired to the device and identified with the instrument tag number.

C. Identify all wires where they terminate at the marshalling panels, local control panels, junction boxes, and field devices with a heat shrink sleeve with machine printed labeling. All Cat5e and Cat6 Ethernet, TPSH analog cables and wires, control cables and wires for digital inputs/outputs, and 120 Volt AC power cables and wires for local control panels and instruments shall be identified at both ends.
1. Identify all wiring with permanent indelible numbered markings at each end of each cable and conductor with approved type wire markers. Submit proposed cable numbering for review by the Engineer and Owner before commencing the installation.
2. The cable and wire numbering system shall be as indicated on the Drawings and in these Specifications. Color coding shall be in accordance with the National Electrical Code current edition unless otherwise indicated.
3. Clearly mark all panels, pull boxes, junction boxes, etc. to indicate the enclosure tag name and nature of service.

4. Provide neatly typed circuit directories for each local control panel power distribution systems to indicate loops or devices powered by the circuit and the fuse size.
5. Identify all exposed control conduits at all pull box locations, where the conduits enter or leave a location, and 40 feet on center throughout the location. This shall apply to conduits above removable ceilings.
6. For direct current wiring, use white for positive and black for negative.
7. For thermistor wiring to motors, use red and blue colored, insulated wire.

PART 3 - EXECUTION

3.1 PREPARATION FOR SHIPMENT

A. Insofar as is practical, the equipment specified in the instrumentation and control sections of Division 40, PROCESS INTERCONNECTIONS-WWTP shall be factory assembled. The parts and assemblies that are of necessity shipped unassembled, shall be packaged and tagged in a manner that will protect the equipment from damage and facilitate the final assembly in the field. Generally, machined and unpainted parts shall be protected from damage by the elements with the application of a strippable protective coating.

3.2 SITE EXAMINATION

A. Prior to submitting bid, the PICS Sub-contractor shall visit the site of the proposed work and familiarize themselves with conditions affecting work. Allowance shall be made in the bid for these conditions and no additional allowance shall be granted because of lack of knowledge of such conditions.

B. The PICS Sub-contractor shall verify all measurements at the building site. Also see the GENERAL CONDITIONS and Division 01, GENERAL REQUIREMENTS.

3.3 COORDINATION WITH OTHER DIVISIONS

A. Examine the Drawings and Specifications of all Divisions associated with this work and be familiar with them. Before commencing work, obtain a ruling from the Engineer on any conflicting issues between Divisions.

B. Provide work plan and identify methodologies for equipment installation with provision made for the most expeditious means to complete the work.

C. Structural members shall not be cut or modified in any way without prior approval of the Engineer.

3.4 EQUIPMENT HANDLING AND STORAGE

A. Receiving, Storing, and Protection of Components during Construction:
   1. Examine each component upon delivery to site. Report all damage noted to the Engineer prior to accepting or rejecting delivery. All instrumentation primary elements, control components, panels, etc. shall be placed in a secure, dry, heated storage building. Maintain the space temperature above 50 degrees F and the space relative humidity below 50 percent.
   2. Perform a preliminary examination upon delivery to ensure that all instrumentation and control components supplied for this project under this Division of the Specifications comply with the requirements stated in the instrument specification sheets and the Drawings.

3. Itemize all non-conformities noted above and forward them to the Engineer. Any delays in construction resulting from the delivery to site of non-conforming instrumentation and control components shall be the responsibility of the Contractor.
4. Precautions:
   a. Do not install primary elements or other sensitive equipment until construction is sufficiently completed to provide an "operating condition" environment. Notify the Engineer prior to installing any equipment of this type.
   b. The physical dimensions of the components shall be checked to ensure that they can be installed without interference with the building structure or other equipment, and that, after installation, there are sufficient clearances on all sides for maintenance, servicing and operation of the equipment.
   c. Ensure that covers where required are properly installed on all equipment. Provide all covers, padding, guards, etc. as required to guard any equipment against damage.
5. Return all damaged equipment to the factory for total corrective repairs.

B. Use all means necessary to protect the installation and to protect products and installed work of all other trades.

C. Any damage to the products and/or installed work shall be repaired or replaced by the Contractor at no additional cost to the Owner, and to the approval of the Engineer.

3.5 STANDARDS OF WORKMANSHIP

A. Work under this contract shall be performed by workmen skilled in the particular trade, including work necessary to properly complete the installation in a workmanlike manner to present a neat and finished appearance. Only the best quality workmanship will be accepted. Installation shall conform to the ANSI National Electrical Installation Standards and other appropriate standards.

B. Execute all work in a manner, which will result in the completed installation presenting an acceptable appearance, to a level of quality defined in the general conditions of this Specification.

C. Unless otherwise specified or shown, install products in accordance with the recommendations and ratings of the product manufacturers.

D. Remove advertising labels from all products installed that have such labels attached. Identification or UL labels are not to be removed.

E. Remove dirt, rubbish, grease, etc. resulting from work performed under this section of the contract from all surfaces.

F. All exposed parts of the instrumentation and control wiring systems such as exposed conduits, flush plates, cabinet trim, fixtures, etc., shall be square and true with the building construction.

G. Obtain the Engineer's approval before performing any cutting on structural members or patching of building surfaces. Any damage to the building or equipment by the PICS Sub-contractor shall be the responsibility of the PICS Sub-contractor and shall be repaired by skilled craftsmen of the trades involved at the Contractor’s or sub-contractor’s expense.

H. Chases, openings, sleeves, hangers, anchors, recesses, equipment pads, and framing for equipment shall be provided by others only if so noted on the Drawings or other specifications of these Contract Documents. Otherwise, they will be provided by the PICS Sub-contractor for their work.

I. Sleeves through floors and walls shall be galvanized steel pipe, flush with walls, ceilings or finished floors, sized to accommodate raceway. Grout all penetrations through concrete walls or floors. Holes through existing concrete and concrete block (CMU) shall be core drilled.

3.6 SEPARATION OF SERVICES

A. Maintain separation between the electrical wiring system, building piping, ductwork, and the instrumentation cables so that each system is isolated (except at approved connections to such systems) to prevent galvanic corrosion. In particular, contact between dissimilar metals, such as copper and aluminum, in damp or wet locations is unacceptable.

B. Classifications of Circuits:
   1. The circuit categorization shall be of first priority. Follow the NEC with respect to separation for electrical safety and the following with respect to electro-magnetic compatibility and for determining necessary separations:

Very Noisy	High voltage circuits and their associated grounding High current (>200A) LV circuits Harmonic-rich LV circuits DC circuits: un-suppressed or above 50V
Noisy	Low current class 2 circuits Medium power pulsed or radio frequency circuits
Indifferent	ELV digital status circuits Intrinsically safe circuits Telecommunications circuits Fire alarm and emergency lighting circuits (note that some fire alarm circuits may fall into the category of signal circuits) Any other emergency, shutdown, or high integrity circuit (e.g., toxic gas alarm)
Sensitive	Analog signal circuits Data communication circuits
Very Sensitive	Low level voltage and current signals (e.g. from instrument sensors)

C. Separation of Circuits:
   1. This section relates to running cables carrying differing types of circuits in close proximity to one another and to other services. Sensitive circuits and very sensitive circuits shall normally be run in individually twisted pair shielded cable.
   2. For cables sharing the same support/containment system, the following shall provide guidance to minimize extraneous interference.
   3. Segregation details:

Segregation between circuits	Very Noisy	Noisy	Indifferent	Sensitive	Very Sensitive
Very Noisy	Thermal grouping as per CE Code	6”	12”	12”	12”
Noisy	6”	Thermal grouping as per CE Code	6”	6”	6”
Indifferent	12”	6”	Separation of circuit types	4”	6”
Sensitive	12”	6”	4”	Touching	2”
Very Sensitive	12”	6”	4”	2”	Touching

4. Do not support wiring from pipes, ductwork, etc. Hangers for suspended ceilings may be used for the support of wiring only when approval is obtained from the Engineer and the ceiling installer, and only if approved clips or hangers are used.

3.7 WIRE AND CABLE

A. Refer to Section 406124, INSTRUMENTATION CABLE-WWTP.

3.8 EQUIPMENT CONNECTIONS

A. Prior to the connection of signal wiring to process control and instrumentation devices, check the device voltage rating and polarity for compatibility with the corresponding loop and/or schematic diagram. Where device and circuit characteristics are found to be incompatible, the connections are not to be made. Report the condition immediately to the Engineer.

B. All control wiring diagrams illustrate typical control circuits applicable to the type of equipment specified. Control circuits may vary with different manufacturer’s equipment. Verify all control circuits with the suppliers of the equipment and make any corrections to the control wiring diagrams that may be required with no additional charge.

C. Provide power disconnect terminals in the marshalling and control panels for all devices or control system input/outputs sourced from the panel.

D. Provide a disconnecting means in the cable connecting each ultrasonic transponder to the transmitter. This disconnect shall consist of a terminal strip in a local WP junction box with approximately 10 feet of cable from the transponder.

3.9 WIRING TO EQUIPMENT SUPPLIED BY OTHERS

A. Equipment supplied by the Owner or by other sections and/or Divisions that have external or field mount control devices, is to be installed, wired and commissioned by applicable instrumentation and controls sections of this Division.

3.10 ACCESS PANELS

A. Provide access panels where instrumentation and control system junction boxes are concealed. Panels shall be of adequate size for servicing of the concealed junction box and complete with necessary frames and hinged doors held closed with captive fasteners. The type and size of panels shall be coordinated with the Engineer.

B. In removable ceiling areas, provide markers on the ceiling tile to locate equipment requiring access. Use a 1-inch diameter blue circle painted on the access panel to indicate that it is for instrumentation and control system access.

3.11 SEALING OF WALL AND FLOOR OPENINGS

A. Seal all conduit and cable entries passing through outside walls of buildings, through partition walls separating electrical rooms from other areas, through fire separations, and through floors above grade.

B. Seal openings after all wiring entries have been completed.

C. Sealing material shall be fire resistant and not contain any compounds which will chemically affect the wiring jacket or insulating material. Cable penetrations through fire separations, if required, are to be sealed. Acceptable methods are Canstrut "Fire Stop", Electrovert "Multi-Cable Transit", or Dow Corning RTV Silicone Foam.

D. Cable transit blocks (with knock out blocks) are also acceptable as long as they have the capability to be sealed.

3.12 SLEEVES

A. Provide sleeves of galvanized steel pipe with machine cut ends of ample size to accommodate conduits passing through walls, partitions, ceilings, floors, etc.

B. For wall, partitions, and ceilings the sleeve ends are to be flush with the finish on both sides. For floors, the ends shall extend 2 inches above finished floor level.

C. Fill the space between the sleeve and the conduit with fire stop material and caulked around the top and bottom with approved permanently resilient, non-flammable and weatherproof silicone base compound. Ensure that the seal is compatible with the floor and ceiling finishes.

D. Locate the sleeves and position exactly prior to construction of the walls and floors.

E. Failure to comply with the above requirements shall be remedied at the Contractor's expense.

3.13 INSTRUMENT MOUNTING STANDS

A. Supply and install instrumentation mounting stands as required. Stands shall be either floor or wall mounted. The mounting stands are to be fabricated from aluminum or stainless steel.

B. Supply and install protective drip shield for any exterior stand-mounted instrumentation equipment. The drip shield is to extend 2 inches at the top and sides from the front face of the equipment. The drip shield shall be fabricated from aluminum.

3.14 CONNECTIONS TO PROCESS EQUIPMENT, MECHANICAL, ELECTRICAL AND EXISTING SYSTEMS

A. Refer to other appropriate Divisions for required tie-in procedures.

3.15 TAGGING STANDARDS FOR DEVICES AND WIRING

A. Tag all devices, wires and I/O using the assigned loop, equipment, or device tag name. Where tag naming and numbering is not defined, the Engineer will provide naming and numbering that is consistent with the plant naming conventions.

3.16 CALIBRATION AND CONFIGURATION

A. Instruments shall be factory pre-calibrated and the calibration verified in-place after installation. Provide a printed record of the factory calibration parameters.

B. Prior to calibration, completely program and configure all instruments including entries of the appropriate range and tag number. Tags are as shown on the P&IDs and the Instrument Index. Where specific loop configurations are required, a block loop schematic shall be provided for input prior to commissioning. Provide a printed record of device serial numbers against their assigned tag number and record all block assignments and configurations.

C. Verify that devices respond to the assigned address, label each device with the address, and maintain a permanent record of the addressing scheme.

D. Instrument set up and calibration shall be conducted by a qualified technician working under the approval of the instrument manufacturer and with qualifications as described in this section.

E. Calibrate all instruments to an accuracy of 1/2 of one percent of reading, or to the manufacturer's stated accuracy for the instrument.

F. Calibrate all instruments in accordance with the manufacturer’s recommendations. In addition, perform the following applicable calibration checks for each instrument and its associated signal conditioning equipment:
   1. Calibrate all inline flow meters by a draw-down test.
   2. Calibrate all vacuum and pressure instruments by manometer or accurate test instrument and hand test pump.
   3. Calibrate gas detectors using standard gas sample.
   4. Calibrate temperature instruments against a standard lab thermometer.

3.17 PROPER MOUNTING

A. Follow the appropriate instrument installation standard details and manufacturer’s recommendations for installing local and field instrumentation and electrical devices.

B. Do not install instrumentation on any support structures which could be removed e.g., handrails, unless shown otherwise on the Drawings. In general, instruments shall only be installed on their own instrument support.

C. Mounting heights of equipment is shown to centerline of equipment unless otherwise specified or indicated.

D. If mounting height of equipment is not specified or indicated, verify the height with the Engineer before proceeding with installation.

E. Field mounted instruments and OITs shall be mounted so that they may be easily read and serviced and all appurtenant devices easily operated. Installation details for some instrument and control panels are provided in the Drawings. Unless otherwise indicated, instruments which include local indicators and displays and OITs shall be mounted approximately 5.5 feet above the floor (center point of display of OIT) and shall be oriented for easy viewing.

3.18 TEMPORARY FACILITIES

A. Offices:
   1. The PICS Sub-contractor must have the permission of the Owner and the Contractor to install a temporary office/job trailer on the project site.
   2. The Contractor and sub-contractors shall completely remove their temporary installations when no longer needed and the premises shall be completely clean, disinfected, patched, and refinished to match adjacent areas.

B. Electrical Utilities:
   1. The electrical sub-contractor shall provide temporary electrical power to the construction site as directed by the Contractor. No connections to the Owner's system shall be allowed without the Owner's written approval.

C. Ladders and Scaffolds:
   1. The PICS Sub-contractor shall provide their own ladders, scaffolds, and similar items of substantial construction for access to their work in various portions of the building as may be required. When no longer needed, they shall be removed by the sub-contractor.

D. Protection Devices:
   1. The PICS Sub-contractor shall provide and maintain their own necessary barricades, fences, signal lights, and other similar items required by all governing authorities or shown on the Drawings. When no longer needed, they shall be removed by the sub-contractor.

E. Temporary Fire Protection:
   1. The PICS Sub-contractor shall provide all necessary first aid hand fire extinguishers for Class A, B, C and special hazards as may exist in their own work area only in accordance with good and safe practices, and as required by jurisdictional safety authorities.

3.19 CLEANING

A. Keep the job site clean. The PICS Sub-contractor shall remove all waste and rubbish associated with their work.

B. Upon completion of work, remove materials, scraps, and debris related to the work and leave all spaces including tunnels, crawl spaces, attics, and ceiling plenums clean and orderly.

C. The PICS Sub-contractor shall be responsible for cleaning the exterior and interior of all their installed equipment prior to start-up. Clean equipment of dirt and debris, including the interior of panels, outlet boxes, and other similar items. Once all equipment has been cleaned, it will be inspected by the Engineer prior to start-up.

D. The PICS Sub-contractor shall provide dust protection for existing materials and equipment, as well as for new materials and equipment, for the duration of the project. Protect existing materials and equipment from damage for the duration of the project. Clean the exterior and interior of all existing and new equipment at the completion of the project.

E. Remove all temporary facilities and restore to conditions present prior to work.

3.20 PLACING SYSTEMS INTO OPERATION AND COMMISSIONING

A. Prior to the starting of instrumentation and control equipment, the PICS Sub-contractor shall thoroughly inspect the installation and any work completed by other trades and the Contractor or other sub-contractors to verify compliance with the Contract Documents.

B. Refer to the requirements of Division 01, GENERAL REQUIREMENTS and Section 406181, PICS COMMISSIONING AND START-UP-WWTP for additional commissioning requirements.

C. The General Contractor and the PICS Sub-contractor, and the System Integrator where appropriate, shall coordinate commissioning activities.

D. Inspections:
   1. Provide two weeks written notice to the Engineer prior to energizing any system to allow for inspection by the Engineer.

E. During commissioning, demonstrate to the Engineer and the Owner's representative, proper calibration and correct operation of instruments and gauges.

F. Commissioning of the instrumentation and control system shall include, but not be limited to, the following:
   1. Verify instrument calibration and provide written report.
   2. Verify signal levels and wiring connections to Marshalling Panels and Local Control Panels for all instrumentation and control equipment.
   3. Function check and adjust under operational conditions the instruments and control equipment.
   4. Coordinate instruments and control equipment supplier's service personnel as required for complete system testing.
   5. The Contractor shall make provisions to be available and coordinate with the PICS Sub-contractor and the System Integrator, and the commissioning team to check the sensor signals from source to destination.
   6. Instruct plant personnel in correct method of operation of instruments and control equipment.
   7. Direct plant personnel at hand-over as to final adjustments of the system for correct operation of plant.

3.21 OWNER TRAINING

A. Training of the Owner’s personnel shall be as specified in Section 019113, GENERAL COMMISSIONING REQUIREMENTS and Section 017900, DEMONSTRATION AND TRAINING.

B. Provide training and training literature in the proper operation and maintenance of all control devices, control valves, monitoring instruments, and ancillary instrumentation described under the instrumentation and control sections of this Division.

3.22 TEST FORMS

Form No.	Title
LCR	Loop Check Report
ITR	Instrument Test Report

END OF SECTION
(Test Forms Included After This Section)

LOOP CHECK REPORT

- ☐ CHECKED OUT OK
- ☐ NOT APPLICABLE
- ☐ FURTHER ACTION REQUIRED

	INSTRUMENT TAG NO.								
LOOP NO. _____ SHEET NO. _____ P & I DWG. NO. _____									
INSTALLATION COMPLETE									
Primary Element									
Impulse Lines									
Block and Drain Valves									
Air Supply/Filter/Regulator									
Wiring									
Tracing/Insulation/Housing									
Mounting and Location									
CDACS I/O and Status									
CALIBRATED									
Impulse Lines Pressure Tested									
LOOP CHECKED									
Element To Receiver									
X Mtr. to Receiver									
X Mtr./Trans. to Receiver									
X Mtr./Trans. to Switches									
Switches to Annunciator									
Interlocking Circuit									
Controller to Valve									
Controller Action D or R									

REMARKS:

READY FOR START-UP

DATE: _____
Installed by: __
Checked by: __

INSTRUMENT TEST REPORT

SYSTEM:
SERVICE: _____ TAG NO.: _____
LOCATION: _____
MAKE: _____ MODEL: _____
SERIAL NO.: UL: _____
ELEMENT: _____ RANGE: _____
DESIGN SETTING/RANGE: CONTACT TO: _____ ON: _____
SIGNAL IN: _____ OUT:
INSTRUMENT CONDITION:_____ ASSOCIATED INSTRUMENT: ____
PROJECT NO.:_____ CONFORM TO SPEC: _____
DATA SHEET:_____

	TEST 1				TEST 2			
TEST METHOD								
	INPUT		OUTPUT		INPUT		OUTPUT	
PROCESS	INC.	DEC.	INC.	DEC.	INC.	DEC.	INC.	DEC.
TEST POINT 1								
TEST POINT 2								
TEST POINT 3								
TEST POINT 4								
TEST POINT 5								
COMMENTS								
GRAPHS								

TESTED BY: _____ CHECKED BY: ___

DATE: _____ DATE: _____

SECTION 406115 – PICS SCOPE OF WORK – WWTP

PART 1 - GENERAL

1.1 PROJECT GENERAL DESCRIPTION

A. Plant Control System Description:
   1. The system to be installed under this Contract is summarized on the Plant Control System (PCS) Control System Architecture Schematics.
   2. The equipment supplied and installed by the Contractor will include, but not be limited to:
      a. Control Panels: CTU and LCPs.
      b. Cat6 Ethernet wiring and communication equipment.
      c. New PCS hardware computers.
      d. New PCS software (Installation by the PICS Sub-contractor/System Integrator.)
      e. Instrumentation equipment with associated field wiring and power supply wiring.
      f. Connections to equipment and panels provided by other Divisions.

B. Description of Process Control Equipment:
   1. The process Drawings, P&ID Drawings, Control System Architecture Drawings, and instrumentation specifications. The Contractor and PICS Sub-contractor shall take a detailed take-off from all Drawings and Specifications for an accurate list of all instrumentation signals.
   2. Section 460754 includes preliminary Kubota Process and Instrumentation Diagrams. Final P&IDs will be provided by the MBR Supplier during submittals.

C. Work Under This Contract:
   1. The Control System/Instrumentation work to be done under this Contract includes, but is not limited to, the supply of materials, labor, equipment, and permits necessary for the complete control system manufacturing, assembly, shop testing, installation, site testing and commissioning for the Hospital WWTP and the Hon-Dah WWTP.
   2. The work under these PICS Sections of the Contract includes supply of instruments as specified in the Instrument Specifications and complete installation and integration of new instruments, as well as those supplied by others, with a newly developed control system.
   3. These PICS specification sections do not show all required PICS work. The required PICS work is shown on the Drawings, described in the detailed Specifications, and as specified herein. A guarantee of all workmanship and materials for a period specified herein is also required.

D. Related Work shall include but not be limited to:
   1. Electrical Work: Electrical work is specified under Division 26, ELECTRICAL-WWTP. This work shall be considered to be a part of these PICS Specifications for proper coordination between the control system and the electrical portions of the work.
   2. Various Process Equipment: Other equipment will be supplied under separate Specification divisions. The process equipment shall be incorporated by the Contractor and PICS Sub-contractor into the overall process control system. The various process equipment items shall be installed and commissioned by the Contractor.

1.2 WORK INCLUDED

A. Also see the GENERAL CONDITIONS, Division 01, GENERAL REQUIREMENTS, and Section 406110, PROCESS INSTRUMENTATION AND CONTROLS SYSTEM (PICS) GENERAL REQUIREMENTS-WWTP which contain information and requirements that apply to the work specified herein and are mandatory for this project.

B. Like items of equipment or materials provided hereunder shall be the end products of one manufacturer to achieve standardization for appearance, maintenance, and replacement, and shall include all necessary appurtenances for a complete and working system. The equipment or materials shall be the product of a manufacturer regularly engaged in the production of equipment or materials for the specified use. The manufacturer shall have the sole responsibility for the proper functioning and coordination of the equipment or materials as furnished.

C. The Contractor or the PICS Sub-contractor shall provide all required miscellaneous equipment and materials, as shown on the Drawings and in accordance with these Specifications. The Contractor or the PICS Sub-contractor shall furnish all equipment and material items, whether specified or not, as necessary to provide a complete, operable instrumentation and control system.

D. This section covers the work included to supply, install, and commission a complete and fully functional control system for the IHS Whiteriver Hospital and Hon-Dah WWTPs. The work shall include any equipment, materials, and labor not specifically noted or detailed in the Specifications and/or the Drawings, but which are evidently required to furnish a complete system. The work shall include, but not be limited to:

1. Provide all instruments shown in the Specifications and Drawings, unless specifically noted as supplied by others, complete with required installation and mounting supports and hardware, sunshields, signal and field and communication and 24VDC power supply wiring to the associated control panels, calibration, setup, testing, adjusting and commissioning. The PICS Sub-contractor shall coordinate with the Contractor and all other Specification Divisions.
2. All instruments shown on the P&ID drawings and in Section 406171, INSTRUMENT SPECIFICATIONS-WWTP and not specifically noted as supplied by others shall be provided by the PICS Sub-contractor.
3. Installation of all instruments shown as supplied by others, complete with all field and communication and 24VDC power supply wiring to the associated Control Panels, required installation and mounting supports and hardware, programming, setup, adjusting fine tuning, testing and commissioning.
4. Provide signal cable between each sensor and transmitter. Each signal cable shall be supplied by the instrument manufacturer and supplied with enough length for a continuous run with no splices between each transmitter and the associated sensor(s). It is the PICS Sub-contractor’s responsibility to determine the sufficient signal cable length.
5. The PICS Sub-contractor shall allow for services of qualified instrumentation manufacturer representatives to carry out setup and testing of all supplied instruments. The representatives shall confirm that all instruments are installed as per the manufacturer’s recommendations; setup, tested and ready for commissioning in a written report submitted to the Engineer prior to when the commissioning commences.

6. Provide engineered and completed control panels; CTU-1000 and CTU-2000 as indicated in Section 406116, PICS ENCLOSURES-WWTP and other Specifications and Drawings. All required mounting hardware is to be provided by the PICS Sub-contractor.
7. Install all vendor supplied Local Control Panels (Hospital WWTP: LCP-1010-01, LCP-1100-01, LCP-1730-01, LCP-1810-01, LCP-1820-01, LCP-1910-01, 02, 03, 04, ; Hon-Dah WWTP LCP-2010-01, LCP-2100-01, LCP-2730-01, LCP-2810-01, LCP-2820-01, LCP-2910-01, 02, 03, 04, LCP-2940-01) as indicated in Section 406116, PICS ENCLOSURES and other Specifications and Drawings. All required mounting hardware is to be provided by the PICS Sub-contractor.
8. Provide control, signal, communication and 24VDC power supply wiring between the PICS instruments and local control panels as indicated in the instrument Index, the I/O list, P&ID Drawings, local control panels layout Drawings, and all other Drawings and Specifications.
9. Provide all communication wiring including but not limited to:
    a. All Ethernet wiring including but not limited to Cat6 cables and patch cords and connect to the Ethernet equipment in CTU, LCPs, and MCC. The PICS Sub-contractor shall setup, test, and commission all Ethernet communication parameters for all Ethernet devices.
10. Assist the electrical sub-contractor in setting up parameters for all VFDs, smart overloads, SSDs and power monitors to provide a fully functional, reliable and operational electrical and control system.
11. Setup all communication parameters on all devices on Ethernet/IP networks.
12. Wire, setup and commission all valve and gate actuators as specified in Section 400557, POWER OPERATED GATE AND VALVE ASSEMBLIES-WWTP. The PICS Sub-contractor shall allow for services of qualified equipment representatives to carry out setup and testing of electric actuators.
13. Provide wire, cable and all other equipment permanent identification as detailed in the Drawings and Specifications.
14. Allow in the bid price an additional five days of work as directed by the Engineer to make any changes and adjustments.
15. The PICS Sub-contractor shall assume full responsibility for protection and safe keeping of all equipment supplied.
16. Setup TCP/IP addresses for all equipment as indicated in Section 406127, INDUSTRIAL ETHERNET NETWORK-WWTP.
17. Setup Ethernet Switches in a Device-level ring (DLR) network.
18. Program alarm dialer as shown in Section 406176, PLANT CONTROL SYSTEM SOFTWARE REQUIREMENTS-WWTP. Allow for programming of 16 alarms and three call lists of five persons. The alarm dialer shall be provided with the programming software and phone for voice message recordings.
19. Provide new PCS hardware and software. The PCS software shall be licensed to the Owner. Provide new PCS computer complete with operating system and MS Office. The new PCS computer shall be provided with a UPS device.
20. Provide System Integration which shall include, but NOT be limited to, PLC applications for the PLCs in CTU-1000 and CTU-2000 and SCADA application for the Factory Talk View SE SCADA software, or equal, complete with testing and commissioning. Refer to all other Drawings and specifications for more information about System Integration requirements.

21. Factory Acceptance Tests (FAT) and site testing and site acceptance tests shall be conducted by the Contractor or PICS Sub-contractor to assess the quality of the control system components and marshalling and control panels and confirm that the Ethernet/IP communication between the PLCs is operational.
22. Allow in the bid price sufficient time to test, adjust, demonstrate and troubleshoot the complete control system for the new facilities including all new devices and wiring. The PICS Sub-contractor shall have fully qualified and available control technicians to work totally independent or with package equipment representatives, until a complete control system is commissioned and works reliably and trouble free. The technicians must be available and dedicated to the commissioning during all the time of the commissioning.
23. Allow enough time to assist in commissioning of package supplied equipment to include but not be limited to: Sewer Lift Stations, headworks systems, MBR Systems, non-potable water systems, UV disinfection systems, sludge dewatering systems, odor control system, and reclaimed water pump (Hon-Dah WWTP only).
24. The Contractor and PICS Sub-contractor will make provision to participate in overall plant operations testing during plant start-up and full commissioning. They will respond to field instrumentation/data communications problems during this period and provide the necessary corrective action when required.
25. Allow in the bid price enough time, minimum of one week in two site visits, for a qualified manufacturer's representative to be on the site and perform instruments installation confirmation, calibration, commissioning and training services.
26. The PICS Sub-contractor will be responsible to properly identify and tag all items supplied sufficiently to prevent loss. Tagging will be of particular importance when the equipment is delivered to site. An equipment list will be made available to the Engineer following delivery to site.
27. Coordinate with the Division 26, ELECTRICAL-WWTP subcontractor to ensure that all required conduits and wiring are provided.
28. Provide new labels to identify all new instruments based on their identification in the P&ID Drawings and other Drawings and specifications. After the job completion, all instruments must be permanently labeled.
29. Provide all Division 40 00 00 Instrumentation and Control equipment submittals and shop drawings per the requirements of Section 013300, SUBMITTAL PROCEDURES and Section 406110, PICS GENERAL REQUIREMENTS-WWTP.
30. Provide Division 40 00 00 Instrumentation and Control equipment O&M manuals per the requirement of Section 017823, OPERATION AND MAINTENANCE DATA and Section 406110, PICS GENERAL REQUIREMENTS-WWTP.
31. Provide seismic restraints for all PICS equipment. Provide seismic restraint of all local control panels to prevent injury or hazard to persons and equipment and to retain equipment in its normal position in the event of an earthquake. Provide all seismic restraint related hardware, including but not limited to, bolts and anchors from the point of attachment to equipment through to and including attachment to the structure.
32. Coordinate with the Division 26, ELECTRICAL-WWTP subcontractor for all required new conduits for Cat6 cables, 120VAC and 24VDC control wiring, 4-20mA instrumentation wiring, instruments and actuators signal wiring, and instruments and control panels 120VAC power supply wiring.

33. Following completion of the Hospital WWTP and Hon-Dah WWTP operations testing, the Contractor and/or PICS Sub-contractor shall rectify any outstanding deficiencies.
34. Provide Warranty Services Support during the maintenance period for the equipment applicable under the PICS scope of responsibilities.
35. Provide the latest version of EDS (Ethernet/IP) files for the supplied equipment.
36. Provide diaphragm seal isolators and factory glycol or silicone oil filled assemblies with the associated pressure switches, indicators and transmitters as indicated on the Drawings and Specifications.
37. Allow for minimum of 40 hours of assistance per WWTP for adjustments of the equipment if desired by the plant staff, after the commissioning is finalized until the end of the warranty period.
38. The PICS Sub-contractor shall provide wiring for all moisture and temperature sensors installed on the submersible pumps and mixers. Refer to the P&ID Drawings for more information. Provide 1pr #18 TPSH wiring for analog signals and 4C #14 wiring for digital signals. The PICS Sub-contractor shall allow for dedicated RGS conduits for analog and digital wiring. Allow for junction boxes. Provide EYS seals if sensors are installed in hazardous location.
39. Provide for all temperature sensors and indicators.
40. Provide control wiring between the Generator and CTU-1000 or CTU-2000 as indicated on the P&ID Drawings.
41. Provide control wiring between the new Automatic Transfer Switch and CTU-1000 or CTU-2000 as indicated on the P&ID Drawings.
42. Provide spare parts as per Section 406191, PICS SPARE PARTS-WWTP.

1.3 WORK EXCLUDED

A. Unless otherwise specifically indicated on the Drawings or in these PICS Specifications, exclude the following from the PICS Sub-contractor's scope of work:
   1. All wireways such as conduits, underground ducts, cable trays, seals, etc. All wireways shall be provided by the Division 26, ELECTRICAL-WWTP subcontractor.
   2. Unless specifically noted otherwise, provision of all Local Operator Stations, Local Operator Stations shall be provided by the Division 26, ELECTRICAL-WWTP subcontractor.
   3. Supply of all valves, gates and associated actuators.
   4. Power supply for all control panels.
   5. 120VAC power supply for instruments.

PART 2 - PRODUCTS

2.1 GENERAL

A. Refer to all other instrumentation and control Drawings and specifications.

PART 3 - EXECUTION

3.1 GENERAL

A. Refer to all other instrumentation and control Drawings and specifications.

END OF SECTION

SECTION 406116 – PICS ENCLOSURES – WWTP

PART 1 - GENERAL

1.1 WORK INCLUDED

A. This section covers furnishing and installing Process Instrumentation and Control Systems (PICS) panels on this project, complete. All equipment, products, and execution must meet all requirements detailed in this Specification.

B. The marshalling panels are defined as the panels located in the process areas to arrange and group field wiring in proper order and allow for easier installation and troubleshooting.

C. The Central Terminal Unit Control Panels at each WWTP (CTU-1000 and CTU-2000) and Local Control Panels (LCPs), in further text both are referred to as Control Panels, are defined as the panels located in the process areas and where the control processors and/or associated I/O modules, and various communication modules and equipment are installed and all field wiring from the associated instruments is terminated. These panels will be connected to, but installed remotely from, the marshalling panels in a location of easy and unrestricted access for the plant operators.

D. Local Operator Stations (LOSs) are to be provided and installed by the Division 26, ELECTRICAL-WWTP contractor.

1.2 GENERAL REQUIREMENTS

A. Also see the GENERAL CONDITIONS, Division 01, GENERAL REQUIREMENTS, and Section 406110, PROCESS INSTRUMENTATION AND CONTROLS SYSTEM (PICS) GENERAL REQUIREMENTS-WWTP which contain information and requirements that apply to the work specified herein and are mandatory for this project.

B. Like items of equipment or materials provided hereunder shall be the end products of one manufacturer to achieve standardization for appearance, maintenance, and replacement, and shall include all necessary appurtenances for a complete and working system. The equipment or materials shall be the product of a manufacturer regularly engaged in the production of equipment or materials for the specified use. The manufacturer shall have the sole responsibility for the proper functioning and coordination of the equipment or materials as furnished.

C. The Contractor or the PICS Sub-contractor shall provide all required miscellaneous equipment and materials, as shown on the Drawings and in accordance with these Specifications. The Contractor or the PICS Sub-contractor shall furnish all equipment and material items, whether specified or not, as necessary to provide a complete, operable instrumentation and control (I&C) system.

D. The control panel builder shop shall be UL 508A certified.

E. It is not the intent of this Specification to completely specify all details of design and construction of the panels.

F. The selection of all accessories, materials and methods of fabrication not specifically covered by these Specifications, but which are necessary to complete the fabrication of the panels, shall be the responsibility of the Contractor and PICS Sub-contractor or Package Equipment Supplier and shall be carried out in accordance with good engineering practices.

G. The enclosures must be suitable for carrying the weight of the equipment mounted inside the panel and on the doors without any distortion or warping.

H. The enclosures shall be sized by the PICS Sub-contractor or Package Equipment Supplier to accommodate the proper layout and mounting of equipment devices as per the I&C Drawings and Specifications.

I. The PICS Sub-contractor shall supply all instruments and components mounted on or within panels unless otherwise noted.

J. All control panels shall be constructed following UL 508A construction requirements and recommendations, and they shall bear the UL label.

K. All free-standing enclosures must be installed on 4-inch high concrete housekeeping pads, a minimum of 2 inches larger in width and depth than the enclosure outside dimensions.

1.3 SUBMITTALS

A. Submittals shall be provided as specified in Section 013300, SUBMITTAL PROCEDURES and Section 406110, PROCESS INSTRUMENTATION AND CONTROL SYSTEMS (PICS) GENERAL REQUIREMENTS-WWTP.

B. Submit product descriptive data and bill of materials for each type of I&C panel, accessory, and component used on this project.

C. Shop Drawings: Provide shop drawings for each panel and related equipment.
   1. Include dimensioned plans, elevations, sections, and details, including required clearances and service space around equipment. Show tabulations of installed devices, equipment features, and ratings.
   2. Detail enclosure types including mounting and anchorage, environmental protection, knockouts, corner treatments, covers and doors, gaskets, hinges, and locks.
   3. Include schematic and wiring diagrams for power, signal, and control wiring.

D. Seismic Qualification Certificates: Provide certificates for panels, accessories, and components, from the manufacturer.
   1. Basis for Certification: Indicate whether the “withstand” certification is based on actual test of assembled components or on calculation.
   2. Dimensioned Outline Drawings of Equipment Unit: Identify center of gravity and locate and describe mounting and anchorage provisions.
   3. Provide detailed description of equipment anchorage devices on which the certification is based and their installation requirements.

E. Provide all required operation and maintenance data.

1.4 QUALITY ASSURANCE, CODES AND STANDARDS

A. As a minimum, the design, materials and construction of panels, cabinets, and racks shall comply with the applicable requirements and recommendations of the following Codes and Standards. The latest edition in force at the time of purchase shall apply.
   1. Electrical Components, Devices, and Accessories: Listed and labeled as defined in NFPA 70, National Electrical Code by a qualified testing agency, and marked for intended location and application.
   2. UL.
   3. All applicable State of Arizona regulations.
   4. National Electrical Manufacturer’s Association (NEMA) IS1.1, Enclosures and IC5, Enclosures for Industrial Controls and Systems.

PART 2 - PRODUCTS

2.1 PANEL ENCLOSURES

A. Provide NEMA Type 12 gasketed enclosures in enclosed, dry electrical rooms and control rooms.

B. All enclosures for mounting outside of electrical rooms and control/server rooms shall be NEMA Type 4 or 4X watertight as a minimum unless otherwise specified or required to meet the electrical area classification.

C. All Control Panels with NEMA 12 rating must have ventilation louvers with an exhaust fan and as indicated on the Drawings. All Control Panels installed outside or in non-air-conditioned environments shall have an integral heater with a thermostat. The PICS Sub-contractor shall provide fan(s) for sufficient cooling of the associated enclosure based on control panels internal heat loads and environment temperature. Provide NEMA 12 rated louvers.

D. All enclosures to have a corrosion inhibitor:
   1. Daubrite 5 Disk VCI Emitter for enclosures less than 5 cubic feet.
   2. Daubrite 10 Disk VCI Emitter for enclosures greater than 5 cubic feet.

E. Unless otherwise specified, provide outside finishes on all enclosures in ANSI 61 Gray.

F. Each enclosure must be supplied with a data pocket for storing wiring diagrams, operation manuals, and other documentation inside the enclosure.

G. Enclosures for certain equipment in corrosive atmospheres shall be NEMA Type 4X approved for the area classification. Stainless steel or Engineer approved equal shall be used.

H. Enclosures for mounting field control indicator lamps and switches in unclassified areas shall be approved model die cast enclosures. Approved field control indicator lamp manufacturers include: Schneider Electric, Allen Bradley or Engineer approved equal.

I. Supply, fabricate, checkout, layout, document and deliver to site fully equipped and functional panels.

J. Fabricate panels/enclosures from minimum 14 gauge steel for self-standing units and 16 gauge steel for wall mounted units complete with necessary stiffening to form a rigid free-standing lineup. The structures must be suitable for carrying the weight of the equipment mounted inside the panel and on the doors. Provide removable top and bottom cable entry plates.

K. Provide panels with front access only. Doors shall be key lockable and fitted with 3-point heavy duty latching assemblies. Provide a continuous piano hinge and a pneumatic hold open device on each door.

L. Finish the interior of each enclosure with white paint. Provide a switched fluorescent light fixture and 120VAC duplex convenience receptacle inside the enclosure.

M. Supply all components contained on or within the panels fully wired under this section of the Specification.

N. For necessary information regarding the engineering and manufacturing of the I Control Panels; refer to the Control Panel Drawings; all applicable Drawings and Specifications; and installation and user manuals for the selected equipment.

O. Panel enclosures supplied as I&C Control Panels and housing PLCs, remote I/O modules, or PLC modules and other control equipment shall be supplied with devices to protect the equipment from damage due to supplied power failure, spikes and drops, noise/harmonics and temporary power failure. Power for all instruments shall be from UPS.

P. It is the PICS Sub-contractor's responsibility to build the Control Panels based on actual physical dimensions of the supplied equipment and panel components. Final layout and panel size will be determined at the shop drawing approval stage. Fuses required shall be determined based on actual instrumentation provided.

2.2 WIRING AND ACCESSORIES

A. Provide wiring inside the panels according to the following:
   1. Control wiring shall be a minimum of #14 AWG tinned stranded copper; insulation rated at 480 Volts.
   2. Wiring for power distribution shall be a minimum of #12 AWG tinned stranded copper; insulation rated at 480 Volts.
   3. Analog wiring shall be a minimum of #18 single pair copper 300V white/black cable with overall foil shield and the drain wire. The white wire shall be positive and the black wire shall be negative. Drain wires shall be clipped in the field and terminated on individual green/yellow terminal blocks in the control panel. The green/yellow terminal blocks shall be bonded to the panel ground bus. The shield shall be grounded at only one end in the control panel grounding terminals, and cut back and insulated at the instrument end.
   4. Refer to Division 26, ELECTRICAL-WWTP for cable routing requirements.

B. Tag each wire at both ends with a heat shrink sleeve that is machine printed.

C. Wiring systems with different voltage levels or types shall be suitably segregated within the panel, according to relevant electrical codes. As a minimum, separate control wiring from analog signal and communications wiring.

D. Run all wiring in enclosed plastic wireways such as Panduit. Size all wireways so that the total cross sectional area of the insulated wire and cable does not exceed forty percent of the cross sectional area of the wireway.

E. Provide a minimum clearance of 1-½ inches between wireways and any point of wire termination.

F. Terminate all wiring, incoming and outgoing, at terminal strips mounted inside the panels. Identify each terminal strip with a terminal strip number, defined as follows:
   1. Wire identification shall use the connected field device tag name with the wire's corresponding terminal number appended to it.
   2. Identify every joint and/or terminal of the above wire run with the same identifier until the wire meets another tagged device, at which point the wire identifier will change to use the new device name and terminal number.
   3. Identify spare wires by using the destination identifier, i.e., the location and terminal identifier of the opposite end of the wire are combined to form the wire tag. All spare wires must be terminated in the dedicated terminals at both ends.
   4. Arrange wiring on terminal blocks such that all internal panel wiring terminates on the inboard side of the terminal block and all external wire connections are made on the outboard side.

G. Provide a 120 VAC panel power distribution system and a 24VDC power distribution system in each panel. Provide a thermal magnetic circuit breaker on each main power circuit and a fused terminal block with blown fuse indicator for each branched circuit off the main.

H. Provide disconnect type terminal blocks, Phoenix Contact or Engineer approved equal type to isolate field wiring that is powered sourced from the panel.

I. Provide sufficient terminals so that not more than two wires are connected under the same terminal. Provide 20 percent spare terminal capacity at each terminal block assembly.

J. Terminals shall be Phoenix Contact or Engineer approved equal type color coded as follows:

Red	=	Positive 24Vdc.
Black	=	0Vdc common and analog signal common.
White	=	Analog signal plus and VAC neutral.
Grey	=	120 VAC.
Green	=	Ground.
Yellow	=	Shield.

K. Provide nameplates for each device on or within the panels and enclosures. Nameplates shall be black lamacoid with white lettering, a minimum of 1-inch x 3-inch in size with up to three lines of 1/8-inch lettering. Securely fasten nameplates and situate them in a visible location.

L. Every cable entering or leaving the enclosure shall be labeled with a permanent marking identification (stainless steel tag) subject to the review by the Engineer.

2.3 PANEL GROUNDING

A. Provide a noise free low resistance grounding connection using stranded ground wire to all equipment installed in the panel according to the manufacturer's recommendations and all applicable standards and codes.

B. Provide a ground system for the instrumentation circuits, isolated from the main power system ground to each marshaling panel.

C. Provide a 1-inch x 8-inch copper grounding bus mounted in each Control Panel with grounding lugs for each panel, suitable for termination of up to a #2 AWG copper grounding conductor. The grounded bus shall be bonded to the ground.

D. Provide in each marshaling panel an isolated grounding buss bar 2-inch x 10-inch, equipped with necessary lugs for accepting two #2 AWG grounding conductors. The grounded bus shall be bonded to the ground.

E. Firmly bond all panel mounted devices on or within the panels to ground. Provide supplementary bonding conductors for back panels and doors. Attach a separate bonding conductor to all devices that are not firmly fastened to the panels with screws for such devices as case mounted instruments, meters, and similar items.

F. Bond each PLC power supply P.E. terminal with #12AWG stranded wire to the control panel ground bus. Bond each ControlLogix chassis functional earth grounding point with #8 AWG stranded wire to the panel ground bus.

G. Bond each PLC DIN rail with #8 AWG stranded wire to the panel ground bus.

H. Bond each control panel ground bus to the grounding electrode system (this is at earth-ground and is the central ground for all electrical equipment and ac power within a facility) with #8 AWG stranded wire.

I. Bond each enclosure door to the grounding lug.

2.4 LOCAL CONTROL AND MARSHALING PANEL EQUIPMENT AND INSTRUMENTS

A. Provide the following panel equipment and instruments, as applicable, unless otherwise indicated. All equipment and instruments shall be supported by the manufacturer for at least 10 years.
   1. Power Supply 24VDC, 10A:
      a. Input: 120VAC.
      b. Output: 24VDC, 10A.
      c. Din Rail Mounted.
      d. Temperature Rating: -10°C to +60°C (without de-rating).
      e. Efficiency: >= 87 percent.
      f. Mount in control panels as per Drawings, Specifications and manufacturer's recommendations.
      g. Relay Output: 120VAC, 2A to indicated Power OK status.
      h. Class 2 / SELV Approved.
      i. Approved Manufacturers: Allen Bradley, Sola Heavy-Duty SDN series, or Engineer approved equal.
   2. Power Supply 24VDC, 5A:
      a. Input: 120VAC.
      b. Output: 24VDC, 5A.
      c. Din Rail Mounted.
      d. Temperature Rating: -10°C to +60°C (without de-rating).
      e. Efficiency: >= 85 percent.
      f. Mount in control panels as per Drawings, Specifications and manufacturer's recommendations.
      g. Relay Output: 120VAC, 2A to indicated Power OK status.
      h. Class 2 / SELV Approved.
      i. Approved Manufacturers: Allen Bradley, Sola Heavy-Duty SDN series, or Engineer approved equal.
   3. Power Supply 24VDC, 3.3A:
      a. Input: 120VAC.
      b. Output: 24VDC, 3.3A.
      c. Din Rail Mounted.
      d. Temperature Rating: -10°C to +60°C (without de-rating).
      e. Efficiency: >= 85 percent.
      f. Mount in control panels as per Drawings, Specifications and manufacturer's recommendations.
      g. Relay Output: 120VAC, 2A to indicated Power OK status.
      h. Class 2 / SELV Approved.
      i. Approved Manufacturers: Allen Bradley, Sola Heavy-Duty SDN series, or Engineer approved equal.

B. Surge Suppressor:
   1. Input: 120VAC.
   2. Output: 120VAC, pure sine wave.
   3. Din Rail Mounted.

4. Current: Minimum 10A.
5. Temperature Rating: -10°C to +45°C (without de-rating).
6. Dry 120VAC rated contacts to indicate device failure.
7. Warranty: 10 years.
8. Mount in control panels as per Drawings, Specifications and manufacturer's recommendations.
9. Approved Manufacturers: Liebert Isatrol Elite, Sola Heavy-Duty STFE series, or Engineer approved equal.

C. Programmable Logic Controllers (PLCs):
1. Programmable Logic Controllers shall be Allen Bradley ControlLogix, or Engineer approved equal.
2. PLCs and their components shall be actively supported by the manufacturer and support shall be available for the next 10 years.
   a. Power Supply.
   b. CPU.
   c. Digital Input Cards.
   d. Digital Output Cards.
   e. Analog Input Cards.
   f. Analog Output Cards.
   g. Ethernet Bridge1756-EN2TR.
   h. Modbus TCP Communication Card if required.
   i. PLC Racks.

D. CTU-1000, CTU-2000 Control Panel UPS Devices:
1. Input: 120VAC.
2. Output: 120VAC, pure sine wave.
3. Output Power: 1000VA.
4. Control Panel door mounted.
5. Complete with auxiliary contacts for low battery alarm and device fault and door mounted kit.
6. Unit to provide 3 minutes operation of connected loads under typical operating conditions.
7. Provide: Liebert IntelliSlot Relay Card IS-Relay.
8. Manufacturer and Model: Liebert GXT4-1000RT120, or Engineer approved equal.

E. Operator Interface Terminal (OIT):
1. In the Specifications and Drawings also referred to as the Human Machine Interface (HMI) and Operator Interface Panel (OIP).
2. One Ethernet Port 100Mbps.
3. Power Supply: 24VDC.
4. Door Mounted Accessories.
5. Touch Screen Size 9-inch or 12-inch.
6. Manufacturer and Model: Allen Bradley PanelView 5310, or Engineer approved equal.

F. Pilot Lights:
1. Provide pilot lights of LED type for extended lamp life, oil tight, push to test, complete with appropriate color lenses. Normal colors used shall be Run=green, Fault=red, and Status=orange unless otherwise depicted elsewhere. Refer to Division 26, ELECTRICAL for additional information.

2. Terminals.
3. Provide strap screw type terminal blocks rated for 120 volts.
4. Identify each terminal block within an enclosure with a unique machine printed terminal block number. Cabinet chassis grounding terminal blocks shall be identified by the electrical ground symbol.
5. Connections to screw terminals shall be locking fork tongue insulated crimp type wire connectors equal to Panduit PAN-TERM series, T&B STA-KON series, or equal.
6. Terminals shall be Weidmuller, Phoenix Contact, or Engineer approved equal.
7. Provide a group of terminals for each of 120 VAC hot and neutral and 24 VDC positive and negative power. Distribution wiring shall have a thermal magnetic circuit breaker upstream of all major blocks of loads, adequately sized to protect the connected load while not causing nuisance tripping. Provide nickel-plated terminals for all high capacity applications in excess of 15 A.
8. All terminals shall be identified with marker pins and/or strips.

G. Nameplates:
1. Refer to Section 406110, PICS GENERAL REQUIREMENTS-WWTP for nameplate specifications.

H. DIN Rails:
1. Use zinc-plated yellow-chromate steel DIN rail to assure proper grounding. The use of other DIN rail materials (for example aluminum or plastic) that can corrode, oxidize, or are poor conductors, can result in improper or intermittent grounding and shall not be used. Secure DIN rail to mounting surface approximately every 7.5 inches and use end-anchors appropriately.

I. Consumables:
1. Supply all consumables such as fuses, lamps, bulbs, etc., until and during start-up and commissioning. At completion of commissioning, provide 10 percent spare inventory of each type of consumables.
2. Provide a tabulated list of all consumables utilized, indicating where used, type, rating, and reorder details. Include the list with the operation and maintenance manual information.

2.5 LOCAL CONTROL PANEL LIST

A. Furnish Control Panels with a supply code of P. Install all of the following Control Panels and all required 120VAC circuits:
1. Hospital WWTP:

	Tag	Description	Lamacoid Label Text	Location Drawing	Supply Code	Power From
1	CTU-1000	OVERALL PLANT CONTROL PANEL	PLANT CONTROL SYSTEM (PCS) CTU-1000	E-10	P	MCC-11
2	LCP-1010-01	SEWER LIFT STATION CONTROL PANEL	BY MANUFACTURER	C6.00 OF BP1	V	EXTERNAL

	Tag	Description	Lamacoid Label Text	Location Drawing	Supply Code	Power From
3	LCP-1100-01	LOCAL CONTROL PANEL	SCREENING AND GRIT REMOVAL CONTROL PANEL LCP-1100-01	M-8	V	MCC-11
4	LCP-1910-01, 02, 03, 04	(4) LOCAL CONTROL PANELS	UV SYSTEM CONTROL PANEL LCP-1910-01 LCP-1910-02 LCP-1910-03 LCP-1910-04	M-16	V	MCC-11
5	LCP-1810-01	LOCAL CONTROL PANEL	NPW SYSTEM CONTROL PANEL LCP-1810-01	M-20	V	MCC-11
6	LCP-1730-01	LOCAL CONTROL PANEL	SLUDGE DEWATERING SYSTEM CONTROL PANEL LCP-1730-01	M-24	V	MCC-11
7	LCP-1820-01	LOCAL CONTROL PANEL	ODOR CONTROL SYSTEM CONTROL PANEL LCP-1820-01	M-8	V	MCC-11

2. Hon-Dah WWTP:

	Tag	Description	Lamacoid Label Text	Location Drawing	Supply Code	Power From
1	CTU-2000	OVERALL PLANT CONTROL PANEL	PLANT CONTROL SYSTEM (PCS) CTU-2000	E-7	P	MCC-21
2	LCP-2010-01	SEWER LIFT STATION CONTROL PANEL	BY MANUFACTURER	BP3 C5.01	V	EXTERNAL
3	LCP-2100-01	LOCAL CONTROL PANEL	SCREENING AND GRIT REMOVAL CONTROL PANEL LCP-2100-01	M-8	V	MCC-21
4	LCP-2910-01, 02, 03, 04	(4) LOCAL CONTROL PANELS	UV SYSTEM CONTROL PANEL LCP-2910-01 LCP-2910-02 LCP-2910-03 LCP-2920-04	M-18	V	MCC-21

	Tag	Description	Lamacoid Label Text	Location Drawing	Supply Code	Power From
5	LCP-2810-01	LOCAL CONTROL PANEL	NPW SYSTEM CONTROL PANEL LCP-2810-01	M-22	V	MCC-21
6	LCP-2730-01	LOCAL CONTROL PANEL	SLUDGE DEWATERING SYSTEM CONTROL PANEL LCP-2730-01	M-26	V	MCC-21
7	LCP-2820-01	LOCAL CONTROL PANEL	ODOR CONTROL SYSTEM CONTROL PANEL LCP-2820-01	M-8	V	MCC-21
8	LCP-2940-01	LOCAL CONTROL PANEL	RECLAIMED WATER PUMP CONTROL PANEL	M-28	V	MCC-21

B. Supply Code:
   1. P – Provided by the PICS Sub-contractor.
   2. V – Supplied by an equipment vendor, installed by the PICS Sub-contractor.

PART 3 - EXECUTION

3.1 EXECUTION REFERENCES

A. Refer to Section 406110, PICS GENERAL REQUIREMENTS-WWTP.

B. Refer to Section 406115, PICS SCOPE OF WORK-WWTP.

3.2 IDENTIFICATION

A. Each enclosure shall be clearly identified with a 0.1-inch thick lamacoid nameplate with black face and white core, mechanically attached with self-tapping screws and glued to the panel door. The nameplate shall indicate the panel name as indicated on the Drawings and in these Specifications.

B. If more than one power source is present in a panel, a separate warning nameplate with red face and white core, mechanically attached with self-tapping screws to the panel door shall be provided. The nameplate shall indicate the number of power sources and their origin.

C. All instruments within each panel shall be identified with a lamacoid nameplate.

D. Provide a list of all circuit breakers and fuses laminated in plastic. The list shall be located in each associated enclosure.

E. All wires shall be identified.

3.3 OTHER INSTALLATION REQUIREMENTS

A. Locate as indicated on the Drawings.

B. Connect instrumentation, power, control, communication and field wiring.

C. Conduit and cable entrance shall be from top or bottom only, unless otherwise shown or specified.

D. Provide all required hardware necessary for installation of the control panels, including but not limited to the structural supports.

E. Provide a 4-inch concrete pad for each self-standing control panel per the details on the Drawings.

F. All spare I/Os on the PLC shall be wired to dedicated terminals and clearly marked.

3.4 RELATED WORK INCLUDED

A. Interconnection to the associated panels terminal strips, communication devices, and field devices.

B. Installation of interconnecting cables to field devices, instruments, and communication devices.

END OF SECTION

SECTION 406120 – PROCESS CONTROL NARRATIVES (PCNs) – WWTP

INTRODUCTION

1.1 This section summarizes the operation of the Plant Control System (PCS) for operating the wastewater plant. Subsections include process control narratives (PCNs) that detail the control strategies of major systems or processes.

1.2 Major systems/processes to be controlled by the PCS have PCNs in Division 40 specifications as follows:

A. Section 406120.01 – PCN: INFLUENT PUMP STATION-WWTP

B. Section 406120.02 – PCN: EQUALIZATION BASIN TRANSFER PUMP STATION-WWTP

C. Section 406120.03 – PCN: AEROBIC SLUDGE DIGESTER-WWTP

D. Section 406120.04 – PCN: EFFLUENT PUMPING SYSTEM-WWTP

1.3 Control specifications of package systems with vendor-supplied control panels are included in individual equipment specifications or associated PCNs as follows:

A. Section 432331.01 – PCN: NON-POTABLE WATER SYSTEM-WWTP

B. Section 433230 – ODOR CONTROL BIOTRICKLING SYSTEM-WWTP

C. Section 433269.01 – CHEMICAL FEED SYSTEMS – PERISTALTIC PUMPS-WWTP (local pump controls integral to pumps.

D. Section 430754 – PACKAGE MBR SYSTEM – GENERAL-WWTP (control narratives to be provided during the submittal process)

E. Section 461155.04 – PCN: SLUDGE DEWATERING SYSTEM-WWTP

F. Section 462113 – SCREENING AND GRIT REMOVAL SYSTEM – GENERAL-WWTP

G. Division 26, ELECTRICAL-WWTP

CONTROLS OVERVIEW AND OVERALL WWTP CONTROL

1.4 CONTROL STRATEGY

A. The PCS (CTU-1000 or CTU-2000) shall be the master control panel of the WWTP. Refer to the P&ID Drawings and Division 40 PCNs for major processes the PCS will control directly. Refer to P&ID Drawings for minor control needs and instrumentation. In addition, the PCS shares required information between vendor-supplied systems so that each system can make necessary adjustments to its individual control.

B. The PCS shall be integrated with SCADA software, which logs and trends plant data, and manages alarms.

END OF SECTION

TABLE OF CONTENTS

1. Introduction 2
   1.1 Process Overview 2
2. Controls Overview 3
   2.1 Control Strategy 3
      2.1.1 Plant Control System 3
      2.1.2 MCC 4
      2.1.3 Local Operator Station 4
   2.2 Sequence of Operation 5
      2.2.1 HAND Operation 5
      2.2.2 AUTOMATIC (AUTO) Operation 5
      2.2.3 FAULT Signals 6
3. Emergency Shut Down and Power Failure 7
   3.1 Emergency Shutdown 7
   3.2 Power Failure 7
4. Control Systems Details 7
   4.1 Controls and Interlocks 7
      4.1.1 PCS Interlocks 7
   4.2 Plant Control System Tags 7

SECTION 406120.01 – PCN: INFLUENT PUMP STATION-WWTP

1. INTRODUCTION

The following Process Control Narrative describes in detail the operation of the Influent Pump Station (IPS) at the Hospital and Hon-Dah Utility WWTPs. The operating conditions and scenarios described below include, but are not limited to, the majority of conditions and scenarios which will be encountered.

Equipment covered by this Process Control Narrative is specified in the following Sections:

Section 43 10 30, SUBMERSIBLE NON-CLOG CENTRIFUGAL PUMPS-WWTP
Division 40 – PROCESS INTERCONNECTIONS-WWTP
Division 26 – ELECTRICAL-WWTP

1.1 Process Overview

Screened and de-gritted influent wastewater, i.e. headworks effluent, will flow by gravity into the IPS wet well. Under typical operations, the IPS will pump this flow to the Equalization Basin (EQ Basin). The IPS, located in the Headworks Room, includes three submersible, non-clog centrifugal pumps, a radar level transmitter, and two backup float switches. Each pump is equipped with a variable frequency drive, located in the Motor Control Center (MCC) in the Electrical Room. The three pumps will operate in a lead, lag, lag configuration.

Each pump discharge pipe is routed vertically out of the wet well with a check valve and manual plug valve. The individual discharge pipes combine to form a single headworks effluent pipe that is metered and then routed to the EQ Basin. If the EQ Basin is taken offline, a manually valved bypass is provided to pump directly from the IPS to the MBR system.

One radar level sensor monitors the wet well water level and signals pump starts and stops based on operator adjustable setpoints. The Plant Control System (PCS) will use the transducer output level to call the appropriate number of pumps, and the PCS will alternate pumps with each pump start. The pumping strategy will be to operate the pumps on a fill and drain cycle. Backup floats will be used for high-level and low-level alarms.

The following table summarizes the Influent Pump Station components and tag numbers.

Process Equipment	Hospital WWTP Tag Number	Hon-Dah WWTP Tag Number
Influent Pump Station Pump 1	1140-P-01	2140-P-01
Influent Pump Station Pump 2	1140-P-02	2140-P-02
Influent Pump Station Pump 3	1140-P-03	2140-P-03
Pump High Temperature Switch*	1140-TSH-01,02,03	2140-TSH-01,02,03
Pump Moisture Switch*	1140-NS-01,02,03	2140-NS-01,02,03
Primary Level Control – Radar	1140-LE/LIT-01	2140-LE/LIT-01
Level Switch/Alarm Low – Float	1140-LSL/LAL-01	2140-LSL/LAL-01
Level Switch/Alarm High – Float	1140-LSH/LAH-01	2140-LSH/LAH-01
Influent Magnetic Flow Meter	1100-FE/FIT-01	2100-FE/FIT-01
Local Operator Stations	1140-LOS-01,02,03	2140-LOS-01,02,03
Pressure Indicator/Pressure Element	1140-PE/PE-01,02,03	2140-PE/PI-01,02,03
*Integral to the pump and provided by the pump manufacturer.		

2. CONTROLS OVERVIEW

Process control and pump operations for the Influent Pump Station will be provided by the Plant Control System (PCS). The PCS will include a human machine interface to allow operators to view operational parameters, monitor the status and alarms of all instrumentation and equipment, access for changing setpoints, manipulate select HOA switches, and silence alarms.

The variable frequency drives (VFDs) for each pump will be located in the Motor Control Center (MCC) and be equipped with keypads and displays allowing for operator access.

The pumps will be equipped with local operator stations (LOSs) adjacent to the pump station for local pump operation. Alarms shall be reset only at the LOSs.

The PCS will monitor wet well level with a radar level sensor, monitor IPS discharge flow rate with the influent magnetic flow meter, control pump speeds through the VFDs, and control the number of pumps called, and pump alternation. Information from the IPS flow meter will not be used for direct control of the pumps.

2.1 Control Strategy

2.1.1 Plant Control System

The PCS will fully control the IPS and generate status signals and alarms. The PCS will receive an analog level signal from the radar level transducer in the wet well. The PCS will call the lead pump at an operator-adjustable water level setpoint and operate at constant speed. If the water level continues to rise and hits a second designated setpoint, the PCS will call the first lag pump to run and operate at a constant speed. If water level reaches the setpoint for the second lag pump, the PCS will call it to run. Once the water level drops to a designated setpoint, all operating pumps turn off to allow the wet well to fill again.

The PLC will alternate lead-lag-lag pump designation to facilitate approximately equal run time for the pumps. The PLC will totalize pump run times and display this value for each pump at the HMI.

The PCS will have at a minimum the following functions for IPS pump control:

- Wet well water level indication
- General FAULT indication for the level transducer
- Lead Pump Start/Stop
- Lag Pump 1 Start/Stop
- Lag Pump 2 Start/Stop
- Speed percent setpoint for each pump
- Speed indication for each pump
- RUN indication for each pump
- Elapsed Time Meter (ETM) for each pump
- VFD frequency indication for each pump
- Motor current indication for each pump
- HOA for each pump
- Position indication of HOA switch at each LOS
- Communication FAULT indication for each pump
- High temperature FAULT for each pump
- Moisture Seal FAULT for each pump
- Pump start FAULT indication for each pump
- Wet well High-level alarm – float switch
- Wet well Low-level alarm – float switch
- IPS flow rate indication from the magnetic flow meter
- FAULT indication for the magnetic flow meter

2.1.2 MCC

The MCC will be located in the electrical room. The MCC provides power to the pumps and includes a VFD for each pump. There will be a keypad and an LCD screen for each pump VFD with operator access to status displays and pump speed controls.

2.1.3 Local Operator Station

Each pump will have a local operator station (LOS) equipped with switches for local controls as needed for regular operation and maintenance. LOSs will be wall or pedestal mounted in the Headworks Room and will have the following minimum functions:

- HOA (Hand-Off-Auto) switch
- Pump RUN indication light (green)
- Pump FAULT indication light (red)
- RESET button

2.2 Sequence of Operation

2.2.1 HAND Operation

When the HOA switch at the LOS for a given pump is in the HAND position, the pump runs continuously at the last input setpoint speed. The speed can be entered to the PCS via the HMI prior to switching to HAND operation. The pump speed can be changed at the MCC VFD keypad at any time. The pump motor operates until the LOS HOA switch is turned to OFF, a fault occurs, or power to the pump is lost. If a pump is turned to HAND or OFF at the LOS, the PCS and MCC do not control pump starts and stops.

2.2.2 AUTOMATIC (AUTO) Operation

During normal operation, the HOA switches at the LOS, VFD keypad, and PCS will be in the AUTO position and the PCS will control the pumps.

During AUTO operation the PCS will turn the pumps on and off at designated water level setpoints. The PCS will also control pump alternation and lead, lag, lag designation. The table below lists recommended set points for the IPS operation. These elevation setpoints allow for an approximate two (2) minute pump run time when operating. Should influent flows be vastly different than forecasted, operators can adjust setpoint elevations to accommodate larger flows while maintaining minimum pump run times and manufacturer-required maximum number of starts per hour.

Normal Mode Set Point (Tag)	Elevation* (ft)
Low Level Float Alarm	1.25
All Pumps Off Setpoint	1.75
Lead Pump On Setpoint	3.25
Lag Pump 1 On Setpoint	4.75
Lag Pump 2 On Setpoint	6.25
High Level Float Alarm	7.25
*Measured from bottom of wet well floor.	

The PCS will select the lead, lag, lag pumps and alternate pumps after each subsequent pump cycle or after 24 hours. After the Lead Pump turns off, Lag Pump 1 becomes the Lead Pump at the next pump start, and Lag Pump 2 become Lag Pump 1, and the Lead Pump becomes Lag Pump 2.

If the Lead Pump fails, the same pump alternation occurs. When an alarm condition is cleared and a pump is placed back into AUTO, it will be assigned a designation of lead, lag, or standby accordingly by the PCS.

Normal Mode. Under normal mode, the Lead Pump will be started when the level in the wet well reaches the Lead Pump On setpoint. The lead pump will initiate pumping. If the water level continues to increase to Lag Pump 1 On Setpoint, a second pump will turn on. Similarly, if the water level continues to increase to Lag Pump 2 On Setpoint, a third pump will turn on. The pumps will run at constant speed.

The pump sequence in the event of increasing flows is as follows:

- When the capacity of the Lead Pump is exceeded, as indicated by the water level rising above the Lag Pump 1 on setpoint, and Lag Pump 2 on setpoint, the lag pumps turn on in consecutive order.
- If the water level continues rising to the High Level Float Alarm setpoint, an alarm will be generated at the PCS and it will be confirmed by the PCS that all pumps are operating. Once triggered, the PLC will increase all pump speeds until the float switch is turned off. Emergency mode will control the pumps until an operator arrives to modulate the flow manually or the PCS is restored to service.

The pump sequence in the event of decreasing flows is as follows:

- Regardless of how many pump are operating, when the water level drops below the All Pumps Off Setpoint, all operating pumps will be shut off.
- If the liquid level continues to fall below the Low-Level Float Alarm setpoint, an alarm will be generated at the PCS and all operating pumps will be stopped at the VFD to prevent pump damage.

EQ Bypass Mode. EQ bypass mode will be initiated manually when the EQ basin and/or the EQ transfer pumps are taken out of service for service and maintenance.

Emergency Mode. Emergency mode will be initiated pump operations depend on the back up floats. This can occur if (1) the level transducer fails or (2) if the facility experiences atypical high flows.

- When the high-level float switch is activated, an alarm to the PCS shall be activated, and all pumps shall be called to run at 100% of pump speed.
- When the low-level float switch is activated, an alarm shall be sent to the PCS, and all pumps shall be turned off.

The IPS will return to Normal Mode operations when the water level drops below the High Level Float Alarm Setpoint.

2.2.3 FAULT Signals

- Pump motors will stop immediately if high motor current is detected, or if the pump's integrated temperature and/or moisture switches are activated. Under any of these conditions a fault alarm will be generated at the PCS. These faults must be reset by pressing the RESET button at the pump LOS.
- A pump fault occurs when the pump fails to start, and an alarm is generated at the PCS.

- A communication fault occurs if there is an issue with signal connectivity and the PCS is no longer receiving or sending signals from/to the MCC or the equipment; a communication fault alarm is generated at the PCS.
- For smaller pieces of equipment like the level transducer of the flow meter, the faults are combined into a single fault state.

3. EMERGENCY SHUT DOWN AND POWER FAILURE

3.1 Emergency Shutdown

In the event of an emergency shutdown of an influent pump by turning the LOS switch to the OFF position or because of equipment failure, the PCS will automatically start the lag pump and the standby pump will become the lag pump.

3.2 Power Failure

In the event of a power failure, any equipment that was running in AUTO or HAND will be started up once the standby generator comes online. Equipment startup is controlled by the PCS, which staggers startup of the process equipment to reduce instantaneous load on the standby generator.

4. CONTROL SYSTEMS DETAILS

4.1 Controls and Interlocks

4.1.1 PCS Interlocks

- The wet well Low-Level Float switch will prevent the IPS pumps from running in either HAND or AUTO mode. Operator access shall allow for temporarily disabling this interlock for 24 hours. After 24 hours, the interlock shall automatically be set again.
- The pump moisture and temperature switches will prevent the IPS pumps from running either in AUTO or HAND mode.
- If all IPS pumps are disabled or the IPS is out of service for any reason, the PCS shall prevent the upstream sewer lift stations at both WWTPs from running.
    - Hospital WWTP: the PCS shall also operate the gate actuators FV-1020-01 and FV-1020-02 to open or close the gates 1000-SDG-01 and 1000-SDG-02. Final decision on gate operation will be made during construction.

4.2 Plant Control System Tags

Legend:

- D – Display on a screen
- S – Display and operator input on a screen
- Alarm Level Priority 1 (Calls autodialer)
- Alarm Level Priority 2 (Local alarm only)
- L – Logged to database
- T – Display on trend

The table below lists the PCS tags and signals. The following list may not contain all required Plant Control System tags and signals. The contractor is to do a detailed take-off from all drawings and specifications and determine all required tags and signals. For the HMI, use a red light or red text to indicate a fault has occurred, or a level float has been switched on.

Signal/Tag Description	Display and Register Type	Alarm Level	Trend/Logging	Notes
Influent Pump #1 HOA Position Indication (LOS)	D			
Influent Pump #1 HOA Switch	S			
Influent Pump #1 RUN	D		L	
Influent Pump #1 FAULT	D	1	L	
Influent Pump #1 Temperate Fault	D	2	L	
Influent Pump #1 Moisture Seal Fault	D	2		
Influent Pump #1 Comm. Fault	D	2		
Influent Pump #1 Current	D		L, T	Show units, Amps
Influent Pump #1 Speed Feedback	S		L, T	Show units, %
Influent Pump #1 Runtime Hours	D		L	Show units, hr
Influent Pump #2 HOA Position Indication (LOS)	D			
Influent Pump #2 HOA Switch	S			
Influent Pump #2 RUN	D		L	
Influent Pump #2 FAULT	D	1	L	
Influent Pump #2 Temperate Fault	D	2	L	
Influent Pump #2 Moisture Seal Fault	D	2		
Influent Pump #2 Comm. Fault	D	2		
Influent Pump #2 Current	D		L, T	Show units, Amps
Influent Pump #2 Speed Feedback	S		L, T	Show units, %
Influent Pump #2 Runtime Hours	D		L	Show units, hr
Influent Pump #3 HOA Position Indication (LOS)	D			
Influent Pump #3 HOA Switch	S			
Influent Pump #3 RUN	D		L	
Influent Pump #3 FAULT	D	1	L	
Influent Pump #3 Temperate Fault	D	2	L	
Influent Pump #3 Moisture Seal Fault	D	2		
Influent Pump #3 Comm. Fault	D	2		
Influent Pump #3 Current	D		L, T	Show units, Amps
Influent Pump #3 Speed Feedback	S		L, T	Show units, %
Influent Pump #3 Runtime Hours	D		L	Show units, hr
Influent Pump #1 Alternation	D			Lead, Lag 1, or Lag 2
Influent Pump #2 Alternation	D			Lead, Lag 1, or Lag 2
Influent Pump #3 Alternation	D			Lead, Lag 1, or Lag 2
Advance Influent Pumps Alternator in LCP	S			

Signal/Tag Description	Display and Register Type	Alarm Level	Trend/Logging	Notes
Lead Pump On Setpoint	S			Show units, ft
Lag 1 Pump On Setpoint	S			Show Units, ft
Lag 2 Pump On Setpoint	S			Show units, ft
All Pumps Off Setpoint	S			Show units, ft
Influent Pump #1 Called to Run in Auto	D			
Influent Pump #2 Called to Run in Auto	D			
Influent Pump #3 Called to Run in Auto	D			
Radar Level Transducer – Level Indication	D		L, T	In feet
Radar Level Transducer – Fault	D	1	L	
Wet Well High Level Float Switch	D	1	L	
Wet Well Low Level Float Switch	D	1	L	
Influent Pump Station Flow	D		L,T	Show units, gpm
Influent Pump Station Daily Totalized Flow	D		L	Show units, gpd
Influent Pump Station Totalized Flow	D			Show units, gallons

SECTION 406120.02 – PCN: EQUALIZATION BASIN TRANSFER PUMP STATION – WWTP

TABLE OF CONTENTS

1. Introduction 2
   1.1 Process Overview 2
2. Controls Overview 3
   2.1 Control Strategy 4
      2.1.1 Plant Control System 4
      2.1.2 MCC 5
      2.1.3 Local Operator Station 5
   2.2 Sequence of Operation 5
      2.2.1 HAND Operation 5
      2.2.2 AUTOMATIC (AUTO) Operation 6
      2.2.3 FAULT Signals 7
3. Emergency Shut Down and Power Failure 7
   3.1 Emergency Shutdown 7
   3.2 Power Failure 8
4. Control Systems Details 8
   4.1 Controls and Interlocks 8
      4.1.1 PCS Interlocks 8
   4.2 Plant Control System Tags 8

SECTION 406120.02 – PCN: EQUALIZATION BASIN TRANSFER PUMP STATION-WWTP

1. INTRODUCTION

The following Process Control Narrative describes in detail the operation of the Equalization (EQ) Basin Transfer Pump Station, including one (1) water level sensor in the EQ basin, three (3) dry-pit positive displacement pumps, three (3) electromagnetic flow meters, and two (2) float switches. The EQ Basin will also be equipped with one (1) submersible mixer. Control panel and local operating station requirements are also detailed. The operating conditions and scenarios described below include, but are not limited to, the majority of conditions and scenarios which will be encountered.

Equipment covered by this Process Control Narrative is specified in the following Divisions:

Division 43 – PROCESS GAS AND LIQUID HANDLING-WWTP
Division 40 – PROCESS INTERCONNECTIONS-WWTP
Division 26 – ELECTRICAL-WWTP

1.1 Process Overview

The EQ Basin Pumps will transport wastewater from the EQ Basin to the MBR basins. There are three (3) rotary lobe positive displacement pumps; one (1) dedicated for each of the MBR basins. The goal of the pumps is to manage the available volume in the EQ basin to dampen diurnal flow peaks and valleys and provide some storage for short duration, high influent flow events. Each pump discharge line is equipped with a magnetic flow meter. The pumps will be controlled with a variable frequency drive (VFD), to vary pump discharge based on feedback from the EQ Basin water level. The VFDs are located in the Motor Control Center (MCC) in the Electrical Room. Backup floats will be used for high-level and low-level alarms and emergency operations.

The following table summarizes the Influent Pump Station components and tag numbers.

Process Equipment	Hospital WWTP Tag Number	Hon-Dah WWTP Tag Number
EQ Transfer Pump 1	1220-P-01	2220-P-01
EQ Transfer Pump 2	1220-P-02	2220-P-02
EQ Transfer Pump 3	1220-P-03	-
Pump High Temperature Switch*	1220-TSH-01,02,03	1220-TSH-01,02,03
Pump Suction Pressure Indicator	1210-PE/PI-01	2210-PE/PI-01
Pump 1 Discharge Pressure Indicator	1220-PE/PI-01	2220-PE/PI-01
Pump 2 Discharge Pressure Indicator	1220-PE/PI-02	2220-PE/PI-02
Pump 3 Discharge Pressure Indicator	1220-PE/PI-03	-
Pump 1 High Discharge Pressure Switch	1220-PSH-01	2220-PSH-01
Pump 2 High Discharge Pressure Switch	1220-PSH-02	2220-PSH-02
Pump 3 High Discharge Pressure Switch	1220-PSH-03	-
Primary Level Sensor– Radar	1210-LE/LIT-01	2210-LE/LIT-01
Level Switch/Alarm Low – Float	1210-LSL/LAL-01	2210-LSL/LAL-01
Level Switch/Alarm High – Float	1210-LSH/LAH-01	2210-LSH/LAH-01
Pump 1 Electromagnetic Flow Meter	1220-FE/FT-01	2220-FE/FT-01
Pump 2 Electromagnetic Flow Meter	1220-FE/FT-02	2220-FE/FT-02
Pump 3 Electromagnetic Flow Meter	1220-FE/FT-03	-
Pump 1 Local Operator Station	1220-LOS-01	2220-LOS-01
Pump 2 Local Operator Station	1220-LOS-02	2220-LOS-02
Pump 3 Local Operator Station	1220-LOS-03	-
Flow Control Valve 1	FV-1220-01	FV-2220-01
Flow Control Valve 2	FV-1220-02	FV-2220-02
Flow Control Valve 3	FV-1220-03	FV-2220-03
EQ Mixer	1210-SM-01	2210-SM-01
EQ Mixer High Temperature Switch*	1210-TSH-01	2210-TSH-01
EQ Mixer Moisture Switch	1210-NS-01	2210-NS-01
EQ Mixer LOS	1210-LOS-01	2210-LOS-01
*Integral to the pump/mixer, and provided by the pump/mixer manufacturer.		

2. CONTROLS OVERVIEW

Process control and pump operations for the EQ Transfer Pumps and the submersible mixer will be provided by the PCS. The PCS will include pages on a human machine interface to allow operators to view operational parameters, monitor the status and alarms of all instrumentation and equipment, ability to change setpoints, manipulate select HOA switches, and silence alarms.

The variable frequency drives (VFDs) for each pump will be located in the Motor Control Center (MCC-11 or MCC-21) and be equipped with keypads and LCD displays allowing for operator access. The pumps will be equipped with local operator stations adjacent to the pump station from where operators can reset alarms. The mixer starter will be located at the MCC and the mixer will have an LOS at the EQ basin.

The PCS will monitor EQ water level with the primary guided wave radar level transducer and vary pump speed based on water level in the EQ basin to target a specified discharge rate, as monitored by the downstream flowmeter.

2.1 Control Strategy

2.1.1 Plant Control System

The PCS will fully control the EQ Transfer Pump Station and generate status signals and alarms. The PCS will receive an analog level signal from the radar level transducer in the EQ basin. The number of pumps in operation is determined by how many MBR trains are operating.

The pumps will operate at the same speed based on the water level in the EQ basin. As water level rises and hits an operator-adjustable setpoint, pump speed will increase to a designated setpoint; flowrate will be confirmed with the pump discharge flowmeter. Similarly, when the EQ basin water level drops below an operator-adjustable setpoint the pumps slow down to achieve a target flowrate. At HIGH level and LOW level setpoints, the pumps will be turned to full speed or shut off, respectively.

Flow from multiple pumps will be combined in a common discharge header. Individual pipes to the MBR trains will be metered with magnetic flow meters and flow will be controlled by flow control valves. The PCS will use the signal from the flow meters to adjust the valves so that equal flow is discharged to all MBR trains in service.

The PCS will have at a minimum, the following functions for EQ Transfer Basin Pump Station:

- EQ Basin water level indication – Guided wave radar level transducer
- FAULT indication for the level transducer
- Target flowrate indication for each pump (based on water level in the EQ basin)
- Pump Start/Stop for each pump
- Speed indication for each pump
- RUN indication for each pump
- Elapsed Time Meter (ETM) for each pump
- VFD speed indication for each pump
- Motor current indication for each pump
- HOA Switch for each pump
- Position indication of HOA switch for each LOS
- Communication FAULT indication for each pump
- High temperature FAULT for each pump
- Pump start FAULT indication for each pump
- EQ basin HIGH-level alarm setpoint and alarm indication

- Position indication for each flow control valve
- FAULT indication for each flow control valve
- EQ basin LOW-level alarm setpoint and alarm indication
- Pump discharge flow rate for each pump – electromagnetic flowmeter
- FAULT indication for each magnetic flow meter

The PCS will have at a minimum, the following functionality for the EQ mixer:

- Mixer Start/Stop
- Mixer RUN indication
- Mixer HOA
- Position indication of HOA switch for mixer LOS
- Mixer Start FAULT
- Communication FAULT
- General Fault – encompassing integral mixer high temperature switch and moisture switch
- Elapsed time meter

2.1.2 MCC

The MCC will be located in the electrical room. The MCC provides power to the mixer and the pumps and includes a VFD for each pump. The pump discharge high pressure switch will feed a digital signal to the MCC, and the MCC will turn off the pumps if the switch is activated. There will be a keypad and an LCD screen for each pump VFD with operator access to status displays and pump speed controls.

2.1.3 Local Operator Station

Each pump will have a local operator station (LOS) equipped with switches for local controls as needed for regular operation and maintenance. LOSs will be mounted in the next to the pumps. The mixer will also have an LOS, mounted to the guardrail above the basin. The LOSs will each have the following functions:

- HOA (Hand-Off-Auto) switch
- Pump RUN indication light (green)
- Pump FAULT indication light (red)
- RESET button

2.2 Sequence of Operation

2.2.1 HAND Operation

When the HOA switch at the LOS for a given pump is in the HAND position, the pump runs continuously at the last input setpoint speed. The desired speed can be entered into the PCS via the HMI prior to switching to HAND operation. Once in HAND, the pump speed can be changed at the MCC VFD LCD screen. The pump motor operates until the LOS HOA switch is turned to OFF, a fault occurs, the pump discharge pressure switches the high pressure switch, or power to the pump is lost. If a pump is turned to HAND or OFF at the LOS, the PCS cannot control pump operations.

When the HOA switch at the LOS for the mixer is in the HAND position, the mixer runs continuously. The mixer operates until the LOS HOA is turned to OFF, a fault occurs, the discharge high pressure switch is activated, the water level drops below the minimum required submergence level, or power is lost. If the mixer is in HAND or OFF at the LOS, the PCS cannot control mixer operations.

2.2.2 AUTOMATIC (AUTO) Operation

During normal operation, the HOA switches at the LOS, VFD keypad, and PCS will be in the AUTO position, and the PCS will control the pumps.

During AUTO operation the PCS will operate the pumps to maintain a total flow rate based on EQ basin level. The total flow rate shall be divided by the number of pumps in service. The flow rates shall be operator adjustable. Feedback from the downstream flowmeters shall be used to maintain equal flow for all pumps in service.

During annual average and maximum month flows, the normal maximum water level in the EQ basin shall not exceed 10 feet. Three deadbands shall be set up as noted in the table below. The programmed pump speed will depend on the selected rotary lobe pump.

Normal Mode Operating Setpoints and Deadbands	Water Level Elevation [1] (ft)	Hospital WWTP Individual pump flowrate (gpm)	Hon-Dah WWTP Individual pump flowrate (gpm)
Low Level Float Switch/Alarm	0.75	--	--
All Pumps Off Setpoint	1.0	--	--
Low Flow Deadband	1.0 to 3.5	1.4 x influent flow	1.4 x influent flow
Average Flow Setpoint – rising water level	3.5 to 5	Constant flow as measured when 3.5 ft level is reached	Constant flow as measured when 3.5 ft level is reached
Average Flow Setpoint – dropping water level	5 to 3.5	Contant flow as measured when 5 ft level is reached	Contant flow as measured when 5 ft level is reached
High Flow Setpoint	5 to 10	0.8 x influent flow	0.8 x influent flow
Maximum Normal Water Level	10	--	--
Storm Flow Setpoint 1	10 to 13	2 x influent flow	2 x influent flow
Storm Flow Setpoint 2	13 to 15.5	3 x influent flow	3 x influent flow
High Level Float Switch/Alarm	16	Full speed all pumps in service	Full speed all pumps in service
Mixer Off Setpoint [2]	4	n/a	n/a
High Pressure Float Switch Setpoint	--	25 psi	25 psi

1. Measured from EQ basin finished floor elevation.
2. Based on MFR recommendations, will depend on supplied mixer.

Normal Mode. Under normal mode, the in-service pumps will operate continuously at the speed as determined in the table above.

The number of pumps in service is determined by the number of MBR basins in service and is not controlled by the EQ basin water level. Pumps speeds shall be modulated to achieve the flow rates indicated above. If EQ basin water level repeatedly drops below the 1.0-ft level, the basin operates in a fill-draw mode. If at high level, the number of pumps/MBR trains in service are not sufficient to keep up with influent flows, operators must manually take a standby MBR train and pump into service. An emergency overflow from the EQ basin to the adjacent digester is provided at an elevation of 16.5 ft.

As water level reaches the mixer shut off level, the submersible mixer will shutoff. If water level is above this shutoff level, the mixer will operate continuously.

Pump Out of Service Mode. This mode can be initiated manually if one EQ Transfer Pump is out of service. This mode allows any EQ Transfer Pump to serve any of the MBR basins.

Emergency Mode. Emergency mode will be initiated if pump operations are based on the back up floats. This can occur if (1) the level transducer fails or (2) if the facility experiences atypical high flows.

- When the high-level float switch is activated, an alarm to the PCS shall be activated, and all pumps shall be called to run at 100% of pump speed.

2.2.3 FAULT Signals

- The mixer or pump motors will stop immediately if high motor current is detected, if the integral motor temperature switch is activated, or if the pump discharge high pressure switch is activated. Under any of these conditions a fault alarm will be generated at the PCS. These faults must be reset by pressing the RESET button at the pump LOS.
- A pump fault occurs when the pump fails to start, and an alarm is generated at the PCS.
- A communication fault occurs if there is an issue with signal connectivity and the PCS is no longer receiving or sending signals from/to the MCC or the equipment; a communication fault alarm is generated at the PCS.
- For smaller pieces of equipment like the level transducer of the flow meter, the faults are combined into a single fault state.

3. EMERGENCY SHUT DOWN AND POWER FAILURE

3.1 Emergency Shutdown

In the event of an emergency shutdown of an EQ basin transfer pump by turning the LOS switch to the OFF position or because of equipment failure, the PCS will operate the actuated flow control valve to allow an unused pump to take over.

3.2 Power Failure

In the event of a power failure, any equipment that was running in AUTO or HAND will be started up once the standby generator comes online. Equipment startup is controlled by the PCS, which staggers startup of the process equipment to reduce instantaneous load on the standby generator.

4. CONTROL SYSTEMS DETAILS

4.1 Controls and Interlocks

4.1.1 PCS Interlocks

- The EQ Basin Low-Level Float switch shall prevent the EQ Transfer pumps from running in either HAND or AUTO mode.
- The pump high temperature switch and the pump high pressure discharge switch shall prevent the pumps from running in either AUTO or HAND mode.
- The mixer high temperature switch shall prevent the mixer from running in either AUTO or HAND.
- The EQ Basin mixer shall turn off when the EQ Basin water level reaches the specified water level and/or if the low-level float switch is activated.

4.2 Plant Control System Tags

Legend:

- D – Display on a screen
- S – Display an adjustable operator input on a screen
- Alarm Level Priority 1 (Calls autodialer)
- Alarm Level Priority 2 (Local alarm only)
- L – Logged to database
- T – Display on trend

The table below lists the PCS tags and signals. The following list may not contain all required Plant Control System tags and signals. The contractor is to do a detailed take-off from all drawings and specifications and determine all required tags and signals. For the HMI, use a red light or red text to indicate a fault has occurred, or a level float has been switched on.

Signal/Tag Description	Display and Register Type	Alarm Level	Trend/Logging	Notes
EQ Pump #1 LOS HOA Position Indication	D			
EQ Pump #1 HOA Switch	S			
EQ Pump #1 RUN	D		L	
EQ Pump #1 FAULT	D	1	L	
EQ Pump #1 Temperate Fault	D	2	L	

Signal/Tag Description	Display and Register Type	Alarm Level	Trend/Logging	Notes
EQ Pump #1 Comm. Fault	D	2		
EQ Pump #1 Current	D		L, T	Show units, Amps
EQ Pump #1 Speed Feedback	S		L, T	Show units, %
EQ Pump #1 Runtime Hours	D		L	Show units, hr
EQ Pump #1 High Discharge Pressure FAULT	D	1	L,	
EQ Pump #2 LOS HOA Position Indication	D			
EQ Pump #2 HOA Switch	S			
EQ Pump #2 RUN	D		L	
EQ Pump #2 FAULT	D	1	L	
EQ Pump #2 Temperate FAULT	D	2	L	
EQ Pump #2 Comm. FAULT	D	2		
EQ Pump #2 Current	D		L, T	Show units, Amps
EQ Pump #2 Speed Feedback	S		L, T	Show units, %
EQ Pump #2 High Discharge Pressure FAULT	D	1	L,	
EQ Pump #2 Runtime Hours	D		L	Show units, hr
EQ Pump #3 LOS HOA Position Indication	D			
EQ Pump #3 HOA Switch	S			
EQ Pump #3 RUN	D		L	
EQ Pump #3 FAULT	D	1	L	
EQ Pump #3 Temperate Fault	D	2	L	
EQ Pump #3 Comm. Fault	D	2		
EQ Pump #3 Current	D		L, T	Show units, Amps
EQ Pump #3 Speed Feedback	S		L, T	Show units, %
EQ Pump #3 Runtime Hours	D		L	Show units, hr
EQ Pump #3 High Discharge Pressure FAULT	D	1	L	
Low Flow Setpoint	S		L	Show units, ft
Average Flow Setpoint	S		L	Show units, ft
High Flow Setpoint	S		L	Show units, ft
Storm Flow Setpoint	S	2	L	
High Level Setpoint	S	1	L	Show units, ft
Pump 1 Flow Meter	D		L, T	
Pump 2 Flow Meter	D		L, T	
Pump 3 Flow Meter	D		L, T	
Mixer off Setpoint	S			Show units, ft
All Pumps off Setpoint	S			Show units, ft
EQ Transfer Pump #1 Called to Run in Auto	D			
EQ Transfer Pump #2 Called to Run in Auto	D			
EQ Transfer Pump #3 Called to Run in Auto	D			
Radar Level Transducer – Level Indication	D		L, T	Show units, feet

Signal/Tag Description	Display and Register Type	Alarm Level	Trend/Logging	Notes
Radar Level Transducer – Fault	D	1	L	
EQ Basin High Level Float Alarm	D	1	L	
EQ Basin Low Level Float Alarm	D	1	L	
EQ Pump #1 Flow	D		L,T	Show units, gpm
EQ Pump #1 Daily Totalized Flow	D		L	Show units, gpd
EQ Pump #1 Totalized Flow	D			Show units, gal
EQ Pump #2 Flow	D		L,T	Show units, gpm
EQ Pump #2 Daily Totalized Flow	D		L	Show units, gpd
EQ Pump #2 Totalized Flow	D			Show units, gal
EQ Pump #3 Flow	D		L,T	Show units, gpm
EQ Pump #3 Daily Totalized Flow	D		L	Show units, gpd
EQ Pump #3 Totalized Flow	D			Show units, gal
Flow Control Valve 1 – Modulation Command	D			
Flow Control Valve 1 – Position Indication	D		L	% open
Flow Control Valve 1 – Fault	D	1		
Flow Control Valve 2 – Modulation Command	D			
Flow Control Valve 2 – Position Indication	D		L	% open
Flow Control Valve 2 – Fault	D	1		
Flow Control Valve 3 – Modulation Command	D			
Flow Control Valve 3 – Position Indication	D		L	% open
Flow Control Valve 3 – Fault	D	1		

SECTION 406120.03 – PCN: AEROBIC SLUDGE DIGESTER – WWTP

TABLE OF CONTENTS

1. Introduction 2
   1.1 Process Overview 2
2. Controls Overview 4
   2.1 Control Strategy 4
      2.1.1 Plant Control System 4
      2.1.2 MCC 6
      2.1.3 Local Operator Station 6
   2.2 Sequence of Operation 6
      2.2.1 HAND Operation 6
      2.2.2 AUTOMATIC (AUTO) Operation 6
      2.2.3 FAULT Signals 8
3. Emergency Shut Down and Power Failure 8
   3.1 Emergency Shutdown 8
   3.2 Power Failure 8
4. Control Systems DETAILS 9
   4.1 Controls and Interlocks 9
      4.1.1 PCS Interlocks 9
   4.2 Plant Control System Tags 9

SECTION 406120.03 – PCN: AEROBIC SLUDGE DIGESTER-WWTP

1. INTRODUCTION

The following Process Control Narrative describes in detail the operation of the Aerobic Digesters and EQ Basin aeration including blowers and aeration grids, valves, and instrumentation. The operating conditions and scenarios described below include, but are not limited to, the majority of conditions and scenarios which will be encountered.

Equipment covered by this Process Control Narrative is specified in the following Divisions:

Division 46 – WATER AND WASTEWATER EQUIPMENT-WWTP
Division 40 – PROCESS INTERCONNECTIONS-WWTP
Division 26 – ELECTRICAL-WWTP

1.1 Process Overview

Waste activated sludge (WAS) is generated by the MBR system and must be routed to the digesters for further treatment.

The return active sludge (RAS) pumps on the MBR skids will be controlled by the MBR control panels. The PCS shall coordinate signals from the MBR System panels with activated valves to direct the WAS to the digesters. Operators shall manually select basins in active service at the PCS.

Aeration will be provided to the basins using submerged fine bubble aeration grids connected to blowers by piping with actuated butterfly valves and air mass flow meters. In addition, the equalization (EQ) basin will have coarse bubble aeration grids connected to the same blowers by piping with an actuated butterfly valve and air mass flow meter.

Blowers will have variable frequency drives (VFD) in the electrical room motor control center (MCC-11 or MCC 21) to allow a range of air flow to match digester and EQ aeration needs which are determined by number of basins on-line and water levels in the digester basins or dissolved oxygen (DO) in the EQ basin. Each digester basin will include a level measurement by radar instrument and the EQ basin will have a DO measurement. The plant control system (PCS) will monitor basin levels and calculate the amount of air needed for each on-line aerobic digester basin or react to EQ basin DO level. Blowers will be called in a sequence to provide a set ALP pressure (Hospital WWTP lead-lag-lag-lag; Hon-Dah WWTP lead-lag). The actuated butterfly valves at each basin will modulate to match the needed air flow based on feedback from the air flow meters. The aeration blower capacity is shown in Table 1-1.

Table 1-1: Aeration Blower Capacity

Site	Blower Units	Aeration Capacity
Hospital WWTP	4	207 scfm/basin 828 scfm/total
Hon-Dah WWTP	2	165 scfm/basin 330 scfm/total

The below table summarizes the Aerobic Digesters components and tag numbers for the Hospital and Hon-Dah WWTPs.

Process Equipment	Hospital Tag Number	Hon-Dah Tag Number
Aerobic Digester #1 Inlet/Outlet Valve	FV-1700-01	FV-2700-01
Aerobic Digester #2 Inlet/Outlet Valve	FV-1700-02	FV-2700-02
Aerobic Digester #3 Inlet/Outlet Valve	FV-1700-03	Future-NIC
Aerobic Digester #4 Inlet/Outlet Valve	FV-1700-04	Future-NIC
Aerobic Digester #1 Level Transducer	1700-LE/LIT-01	2700-LE/LIT-01
Aerobic Digester #2 Level Transducer	1700-LE/LIT-02	2700-LE/LIT-02
Aerobic Digester #3 Level Transducer	1700-LE/LIT-03	Future-NIC
Aerobic Digester #4 Level Transducer	1700-LE/LIT-04	Future-NIC
EQ Basin Water Level Transducer	1210-LE/LIT-01	2210-LE/LIT-01
Aerobic Digester #1 Air Valve	FV-1720-01	FV-2720-01
Aerobic Digester #2 Air Valve	FV-1720-02	FV-2720-02
Aerobic Digester #3 Air Valve	FV-1720-03	Future-NIC
Aerobic Digester #4 Air Valve	FV-1720-04	Future-NIC
EQ Basin Air Valve	FV-1720-05	FV-2720-05
Aerobic Digester #1 Air Flow Meter	1720-FE/FIT-01	2720-FE/FIT-01
Aerobic Digester #2 Air Flow Meter	1720-FE/FIT-02	2720-FE/FIT-02
Aerobic Digester #3 Air Flow Meter	1720-FE/FIT-03	Future-NIC
Aerobic Digester #4 Air Flow Meter	1720-FE/FIT-04	Future-NIC
EQ Basin Air Flow Meter	1720-FE/FIT-05	2720-FE/FIT-05
EQ Basin Dissolved Oxygen Probe	1210-AE/AIT-01	2210-AE/AIT-01
ALP Air Pressure Gauge	1720-PE/PIT-01	2720-PE/PIT-01
Aerobic Digester Blower #1	1720-B-01	2720-B-01
Aerobic Digester Blower #2	1720-B-02	2720-B-02
Aerobic Digester Blower #3	1720-B-03	Future-NIC
Aerobic Digester Blower #4	1720-B-04	Future-NIC
Aerobic Digester Blower #1 Low Flow Switch	1720-FSL-01	2720-FSL-01
Aerobic Digester Blower #2 Low Flow Switch	1720-FSL-02	2720-FSL-02
Aerobic Digester Blower #3 Low Flow Switch	1720-FSL-03	Future-NIC
Aerobic Digester Blower #4 Low Flow Switch	1720-FSL-04	Future-NIC

2. CONTROLS OVERVIEW

Process control for the Aerobic Digesters and EQ Basin aeration will be provided by the Plant Control System (PCS). The PCS will include human machine interface pages to allow operators to view operational parameters. The PCS will monitor the status and alarms for all the Aerobic Digester and EQ Basin instrumentation and equipment and allow operator access for changing level setpoints, changing ALP air pressure setpoints, selecting HOA switches on blower equipment and valves, setting lead and lag units, and reset alarms. The PCS will control basin inlet/outlet valves, blower operation, and ALP valves. The PCS will also monitor the status and alarms for the EQ basin instrumentation and equipment and allow operator access for changing DO level setpoints.

The variable frequency drives (VFDs) for each blower will be located in the Motor Control Center (MCC) and be equipped with keypads and displays allowing for operator access. Information from the ALP flow meters and ALP pressure will be used for direct control of the aeration blowers.

Level instruments in each basin will be used for operator monitoring of volumes, control of the inlet/outlet valves, and calculation of air flow required for each basin.

2.1 Control Strategy

2.1.1 Plant Control System

The PCS will fully control the aerobic digesters with associated aeration and generate status signals and alarms. The PCS will receive an analog level signal from the radar level transducers, analog ALP air flow meters measurement for each of the basins, and analog signal from the blower discharge pressure transmitter. Operators will select which basin(s) are on-line and the desired level in each basin and the PCS will operate the inlet/outlet valves to fill with open/close functionality. Filling will come from the WAS stream when the MBR control settings dictate. Draining of DS will occur when the solids dewatering system equipment is in service and based on operator selection of the basin to be drained. ALP flow to each basin will be determined by a PCS level calculation setpoint with ALP valves that have modulating ability using analog signal(s) from the PCS.

The PCS will fully control the EQ basin aeration and generate status signals and alarms. The PCS will receive an analog signal from the basin DO probe, analog signal from the basin water level transducer, an analog ALP air flow meter measurement for the EQ basin, and an analog signal from the blower discharge pressure transmitter. ALP flow to the EQ basin will be determined by a PCS DO setpoint with an ALP valve that has modulating ability using analog signal(s) from the PCS. ALP flow to the EQ basin will be shutoff at an adjustable water level setpoint.

The PCS will call the lead blower based on the on-line digesters basin(s) level calculation or EQ basin DO warranting run and operate at constant speed to maintain a discharge pressure setting. Air flow as measured by the ALP flow meter(s) will cause the modulating valves to open and adjust. Adjustment of the valves will cause the blower discharge pressure to change and control the blower speed, all through the PCS. As the digester basin(s) fill or DO is low in the EQ basin, the air flow requirement and blower speed shall increase to match. When subsequent basins are brought on-line, each basin air flow calculation will require the blower to increase speed up until it reaches full speed. When full speed is reached and can no longer maintain required air flow as measured by ALP flow meters, lag blowers shall be called. When lag blowers are brought on-line, they will slowly ramp up and the lead blower will slowly ramp down until they match speed. After the speed match, all units will operate at the same speed. If a basin is taken off-line for decant operation or is drained, the calculated volume will reduce air flow needs. When the air flow as measured by the ALP flow meter(s) exceeds the need and the blowers are ramped down to their low-end speed, a blower unit shall drop off. The remaining blowers will modulate speed to produce the discharge pressure setting and required air flow. Generally, a full digester basin matches up to the full speed of a blower.

The PCS will have at a minimum the following functions for aerobic digester and EQ basin control:

- Aerobic digester(s) level indication (each)
- EQ basin level indication
- General FAULT indication for the radar level transducer(s) (each)
- EQ basin DO indication – DO probe
- General FAULT indication for the EQ basin DO probe
- Inlet/Outlet valve(s) Open-Close command (each)
- Inlet/Outlet valve(s) Open-Close position indication (each)
- General FAULT indication for the Inlet/Outlet valve(s) (each)
- Aerobic digester air requirement calculation setpoint- scfm/foot depth
- EQ basin air shutoff adjustable setpoint – water level
- EQ basin air shutoff adjustable setpoint – dissolved oxygen concentration
- ALP valve(s) modulate % open position control command (each)
- ALP valve(s) modulate position % open position feedback indication (each)
- General FAULT indication for the ALP valve(s) (each)
- ALP discharge pressure indication
- General FAULT indication for the ALP discharge pressure
- Pressure setpoint for ALP discharge
- ALP flow rate indication from air mass flow meter(s) (each)
- FAULT indication for the air mass flow meter(s)
- Lead Blower Start
- Lag Blower 1 Start
- Lag Blower 2 Start
- Lag Blower 3 Start
- Speed indication for each blower
- RUN indication for each blower

- Elapsed Time Meter (ETM) for each blower
- VFD frequency indication for each blower
- Motor current indication for each blower
- Position indication of HOA switch for each VFD
- Communication FAULT indication for each blower
- High temperature FAULT for each blower
- General FAULT indication for each blower

2.1.2 MCC

The MCC for the blowers will be located in the electrical room. It provides power to the blowers and includes a VFD for each unit. There will be a key pad and an LCD screen for each VFD with operator access to status displays and blower speed controls.

2.1.3 Local Operator Station

Each blower will have a local operator station (LOS) equipped with a disconnect switch which will allow each unit to be manually de-energized. The blower units have pressure, temperature, and oil level monitoring that can be manually read.

2.2 Sequence of Operation

2.2.1 HAND Operation

When the HOA switch at the MCC for a given blower is in the HAND position, the blower runs continuously at the last input setpoint speed. The speed can be entered to the PCS via the HMI prior to switching to HAND operation. Once in HAND, the blower speed can be changed at the MCC using the VFD key pad at any time. The blower motor operates until the MCC HOA switch is turned to OFF, a fault occurs, or power to the blower is lost. If a blower is turned to OFF at the LOS disconnect switch, the PCS and MCC will not control blower starts and stops.

2.2.2 AUTOMATIC (AUTO) Operation

During normal operation, the HOA switch on the VFD key pad at the MCC will be in the AUTO position, and the PCS will control the blowers.

During AUTO operation the PCS will turn the blowers on and off based on on-line basins, air requirement calculation setpoint, and ALP discharge pressure. The PCS will also control blower alternation and lead, lag, lag, lag designation. The table below lists recommended set points for the blower operation.

Parameter	Setpoint
Digester Air Flow	11 scfm/ft
EQ Basin DO Concentration Air Shutoff	1.0 mg/L
ALP Discharge Pressure Setpoint	7.0 psi
ALP Discharge Pressure Lag On	6.5 psi
ALP Discharge Pressure Lag Off	7.5 psi
Digester Water Level Low	2 feet*
Digester Water Level High	14 feet*
EQ Basin Water Level Air Shutoff	5 feet*
*Above basin floor	

The PCS will select the lead, lag, lag, lag blowers and alternate blowers after each subsequent blower cycle or after 24 hours. After the Lead Blower turns off, for the next start, Lag Blower 1 becomes the Lead Blower, and Lag Blower 2 becomes Lag Blower 1, and the Lead Blower becomes Lag Blower 2.

If the Lead Blower fails, the same blower alternation occurs. When an alarm condition is cleared and a blower is placed back into AUTO, it will be assigned a designation of lead, lag, or standby accordingly by the PCS.

Normal Mode. Under normal mode, the Lead Blower will be started when the level in the basin reaches the Digester Low setpoint or EQ Basin DO Low setpoint. The lead blower will initiate operation at a flow of approximately 60 scfm as determined by the ALP modulating valve and flow meter. If the water level continues to increase in the digesters, ALP valves modulate open, and ALP pressure drops below the Setpoint, a lag blower will turn on. Similarly, this scenario will be repeated through the remaining lag blowers. As more blowers turn on, the head loss in the ALP discharge piping increases, and individual blower output will correspondingly decrease according to the blower curve. The blowers may run at 100% of maximum speed with all basins full.

The blower sequence in the event of increasing digester basin level(s) or decreasing EQ Basin DO is as follows:

- When the capacity of the Lead Blower is exceeded, as indicated by the reading of a lower pressure than the ALP discharge pressure setpoint, the lag blowers turn on in consecutive order.

- If the pressure continues to remain below the ALP discharge pressure setpoint, an alarm will be generated at the PCS and it will be confirmed by the PCS that all blowers are operating. Once triggered, the PCS will increase all blower speeds to 100% until the pressure setpoint is reached. If the setpoint is not reached, Emergency Mode will control the blowers until an operator arrives to modulate the flow manually or the pressure setpoint is satisfied.

The blower sequence in the event of decreasing flows is as follows:

- When the capacity of the Lead and Lag Blowers cause exceedance of the ALP discharge high pressure setpoint, the blowers turn off in consecutive order.
- When the basin level(s) are below the Digester Low setpoint, all operating blowers will be shut off.
- If the liquid level continues to fall below the Low Level setpoint or EQ Basin DO Low setpoint with blower(s) running, an alarm will be generated at the PCS and all operating blowers will be stopped at the VFD to prevent blower or aeration system damage.

.**Emergency Mode.** None

2.2.3 FAULT Signals

- Blower motors will stop immediately if high motor current is detected, or if the blower's integrated temperature switches are activated. Under any of these conditions an external fault alarm will be generated at the PCS. These faults must be reset by pressing the RESET button at the blower LOS.
- A communication fault occurs if there is an issue with signal connectivity and the PCS is no longer receiving or sending signals from/to the MCC or the equipment.
- For smaller pieces of equipment like the level transducer, flow meter, and actuated valves, the communication and general faults are combined into a single fault state.

3. EMERGENCY SHUT DOWN AND POWER FAILURE

3.1 Emergency Shutdown

In the event of an emergency shutdown of a blower by moving the LOS disconnect switch to the OFF position or because of equipment failure, the PCS will automatically start the lag blower and the standby blower will become the lag blower.

3.2 Power Failure

In the event of a power failure, any equipment that was running in AUTO or HAND will be started up once the standby generator comes online. Equipment startup is controlled by the PCS, which staggers startup of the process equipment to reduce instantaneous load on the standby generator.

4. CONTROL SYSTEMS DETAILS

4.1 Controls and Interlocks

4.1.1 PCS Interlocks

- The basin low level setpoint will prevent the blowers from running in either HAND or AUTO mode.
- The blower temperature switches will prevent the blowers from running either in AUTO or HAND mode.
- The EQ basin air shutoff water level setpoint will prevent the EQ basin ALP valve from opening.

4.2 Plant Control System Tags

Legend:

- D – Display on a screen
- S – Display and operator input on a screen
- Alarm Level Priority 1 (Calls autodialer)
- Alarm Level Priority 2 (Local alarm only)
- L – Logged to database
- T – Display on trend

The table below the PCS tags and signals. The following list may not contain all required Plant Control System tags and signals. The contractor is to do a detailed take-off from all drawings and specifications and determine all required tags and signals. For the HMI, use a red light or red text to indicate a fault has occurred, or a level float has been switched on.

Signal/Tag Description	Display and Register Type	Alarm Level	Trend/Logging	Notes
Radar Level Transducer #1– Level Indication	D		L, T	Show units, feet
Radar Level Transducer #1– Fault	D	2	L	
Radar Level Transducer #2– Level Indication	D		L, T	Show units, feet
Radar Level Transducer #2– Fault	D	2	L	
Radar Level Transducer #3– Level Indication	D		L, T	Show units, feet
Radar Level Transducer #3– Fault	D	2	L	
Radar Level Transducer #4– Level Indication	D		L, T	Show units, feet
Radar Level Transducer #4– Fault	D	2	L	
EQ Basin Radar Transducer Level Indication	D		L, T	Show units, feet

Signal/Tag Description	Display and Register Type	Alarm Level	Trend/Logging	Notes
EQ Basin Radar Transducer FAULT	D	1	L, T	
EQ Basin Air Shutoff Water Level Setpoint	S		L	Show units, feet
EQ Basin DO Conc. Air Shutoff Setpoint	S		L	Show units, mg/L
EQ Basin DO Concentration Indication	D		L, T	Show units, mg/L
EQ Basin DO Probe Fault	D	2	L	
ALP Flow Meter #1– Flow Indication	D		L, T	Show units, scfm
ALP Flow Meter #1– Fault	D	2	L	
ALP Flow Meter #2– Flow Indication	D		L, T	Show units, scfm
ALP Flow Meter #2– Fault	D	2	L	
ALP Flow Meter #3– Flow Indication	D		L, T	Show units, scfm
ALP Flow Meter #3– Fault	D	2	L	
ALP Flow Meter #4– Flow Indication	D		L, T	Show units, scfm
ALP Flow Meter #4– Fault	D	2	L	
EQ Basin ALP Flow Meter Flow Indication	D		L, T	Show units, in scfm
EQ Basin ALP Flow Meter FAULT	D	2	L	
Inlet/Outlet Valve #1– Open Command	D		L	
Inlet/Outlet Valve #1– Open Indication	D		L	
Inlet/Outlet Valve #1– Fault	D	2	L	
Inlet/Outlet Valve #2– Open Command	D		L	
Inlet/Outlet Valve #2– Open Indication	D		L	
Inlet/Outlet Valve #2– Fault	D	2	L	
Inlet/Outlet Valve #3– Open Command	D		L	
Inlet/Outlet Valve #3– Open Indication	D		L	
Inlet/Outlet Valve #3– Fault	D	2	L	
Inlet/Outlet Valve #4– Open Command	D		L	
Inlet/Outlet Valve #4– Open Indication	D		L	
Inlet/Outlet Valve #4– Fault	D	2	L	
ALP Valve #1– Position Command	D		L	
ALP Valve #1– Position Indication	D		L, T	
ALP Valve #1– Fault	D	2	L	
ALP Valve #2– Position Command	D		L	
ALP Valve #2– Position Indication	D		L, T	
ALP Valve #2– Fault	D	2	L	
ALP Valve #3– Position Command	D		L	
ALP Valve #3– Position Indication	D		L, T	
ALP Valve #3– Fault	D	2	L	
ALP Valve #4– Position Command	D		L	
ALP Valve #4– Position Indication	D		L, T	
ALP Valve #4– Fault	D	2	L	

Signal/Tag Description	Display and Register Type	Alarm Level	Trend/Logging	Notes
EQ Basin ALP Valve – Position Indication	D		L, T	
EQ Basin ALP Valve - Fault	D	2	L	
ALP Pressure– Pressure Indication	D		L, T	Show units, psi
ALP Pressure– Fault	D	2	L	
Blower #1 Running Mode	D		L	
Blower #1 Faulted Mode	D	2	L	
Blower #1 External Fault	D	2	L	PCS determined
Blower #1 Comm. Fault	D	2	L	PCS determined
Blower #1 Speed Feedback	D		L, T	Show units, %
Blower #1 Speed Control	S		L, T	Show units, %
Blower #1 Runtime Hours	D		L	Show units, hr
Blower #2 Running Mode	D		L	
Blower #2 Faulted Mode	D	2	L	
Blower #2 External Fault	D	2	L	PCS determined
Blower #2 Comm. Fault	D	2	L	PCS determined
Blower #2 Speed Feedback	D		L, T	Show units, %
Blower #2 Speed Control	S		L, T	Show units, %
Blower #2 Runtime Hours	D		L	Show units, hr
Blower #3 Running Mode	D		L	
Blower #3 Faulted Mode	D	2	L	
Blower #3 External Fault	D	2	L	PCS determined
Blower #3 Comm. Fault	D	2	L	PCS determined
Blower #3 Speed Feedback	D		L, T	Show units, %
Blower #3 Speed Control	S		L, T	Show units, %
Blower #3 Runtime Hours	D		L	Show units, hr
Blower #4 Running Mode	D		L	
Blower #4 Faulted Mode	D	2	L	
Blower #4 External Fault	D	2	L	PCS determined
Blower #4 Comm. Fault	D	2	L	PCS determined
Blower #4 Speed Feedback	D		L, T	Show units, %
Blower #4 Speed Control	S		L, T	Show units, %
Blower #4 Runtime Hours	D		L	Show units, hr

SECTION 406120.04 – PCN: EFFLUENT PUMPING SYSTEM – WWTP

TABLE OF CONTENTS

1. Introduction 2
   1.1 Process Overview 2
2. Controls Overview 3
   2.1 Control Strategy 3
      2.1.1 Plant Control System 3
      2.1.2 MCC 4
      2.1.3 Local Operator Station 4
   2.2 Sequence of Operation 4
      2.2.1 HAND Operation 4
      2.2.2 AUTOMATIC (AUTO) Operation 5
      2.2.3 OFF Operation 5
      2.2.4 FAULT Signals 5
3. Emergency Shut Down and Power Failure 5
   3.1 Emergency Shutdown 5
   3.2 Power Failure 6
4. Control Systems DETAILS 6
   4.1 Controls and Interlocks 6
      4.1.1 PCS Interlocks 6
   4.2 Plant Control System Tags 6

SECTION 406120.04 – PCN: EFFLUENT PUMPING SYSTEM-WWTP

1. INTRODUCTION

The following Process Control Narrative describes in detail the operation of the Reclaimed Effluent Pump Station, including pumps, level transducers, and floats. The operating conditions and scenarios described below include, but are not limited to, standard operating conditions and emergency operating conditions.

Equipment covered by this Process Control Narrative is specified in the following Divisions:

Section 43 23 21, EFFLUENT PUMPING SYSTEMS-WWTP
Division 40 – PROCESS INTERCONNECTIONS-WWTP
Division 26 – ELECTRICAL-WWTP

1.1 Process Overview

Effluent from the MBR system will be collected in the Reclaimed Effluent Tank to be reused within the plant in the NPW system as designated in the NPW system control narrative or to be boosted by the effluent pump station to the Reclaimed Water Storage Tank for use around the site as irrigation or for water features.

The Reclaimed Effluent Pumping System will consist of 2,000-gallon Reclaimed Effluent tank in the Process Room and two end suction centrifugal, non-clog pumps, and instrumentation mounted in the tank for level detection. Each pump is equipped with an integral variable frequency drive ramped up and down to maintain a constant level in the reclaimed effluent tank. Feedback from a pressure transducer may be used to verify pump performance.

Table 1: Effluent Pump Capacity

	NPW Pump Capacity
Effluent Pump 1 1920-P-01	262 gpm
Effluent Pump 2 1920-P-02	262 gpm

Level in the equalization tank will be monitored with a radar sensor which will be used to control the effluent pumps. A back-up float system with a low-low level alarm will be used to stop the pumps if the radar sensor has failed. Table 2 summarizes the Effluent components and tag numbers.

Table 2: Effluent Pump Station Equipment and Instrumentation

Process Equipment	Tag Number (Hospital)	Tag Number (Hon-Dah)
Reclaimed Effluent Pump 1	1920-P-01	2920-P-01
Reclaimed Effluent Pump 2	1920-P-02	2920-P-02
Reclaimed Effluent Tank Primary Level Control – Radar	1920-LE-01	2920-LE-01
Low Level Float Switch	1920-LSL/LAL-01	2920-LSL/LAL-01
Local Operator Stations	1920-LOS-01,02	2920-LOS-01,02
Local Control Panel	LCP-1920-01	LCP-1920-01

2. CONTROLS OVERVIEW

Process control and pump operations for the Effluent Pump Station will be provided by the Plant Control System (PCS). The PCS will include a human machine interface page to allow operators to view operational parameters, monitor the status and alarms of all instrumentation and equipment, access for changing setpoints, manipulate select HOA switches, and silence alarms.

The variable frequency drives (VFDs) for each pump will be located in the Motor Control Center (MCC-11 or MCC 21) and be equipped with keypads and displays allowing for operator access. The pumps will be equipped with local operator stations (LOSs) adjacent to the pump station for local pump operation, from where operators can reset alarms.

The PCS will monitor Reclaimed Effluent tank level with a radar level sensor, control pump speeds through the VFDs, and control the number of pumps called, and pump alternation.

2.1 Control Strategy

2.1.1 Plant Control System

The PCS will fully control the Effluent Pumping Station and generate status signals and alarms. The PCS will receive an analog level signal from the radar level transducer in the Reclaimed Effluent Tank. The PCS will call the Duty pump at an operator-adjustable water level setpoint and operate at constant speed. If the water level continues to rise and hits a second designated setpoint, the PCS will call the Standby pump to run and operate at a constant speed. Once the water level drops to a designated setpoint, all operating pumps turn off to allow the Reclaimed Effluent Tank to fill again.

The PCS will alternate Duty-Standby pump designation to facilitate approximately equal run time for the pumps. The PLC will totalize pump run times and display this value for each pump at the HMI.

The PCS will have at a minimum the following functions for Effluent pump control:

- Reclaimed Effluent Tank water level indication
- General FAULT indication for the level transducer
- Duty Pump Start/Stop
- Standby Start/Stop
- Start/Stop
- Speed percent setpoint for each pump
- Speed indication for each pump
- RUN indication for each pump
- Elapsed Time Meter (ETM) for each pump
- VFD frequency indication for each pump
- Motor current indication for each pump
- HOA for each pump
- Position indication of HOA switch at each LOS
- Communication FAULT indication for each pump
- Pump start FAULT indication for each pump
- Reclaimed Effluent Tank High-level alarm
- Reclaimed Effluent Tank Low-level alarm
- Effluent flow rate indication from the magnetic flow meter
- FAULT indication for the magnetic flow meter

2.1.2 MCC

The MCC will be located in the electrical room. The MCC provides power to the pumps and includes a VFD for each pump. There will be a keypad and an LCD screen for each pump VFD with operator access to status displays and pump speed controls.

2.1.3 Local Operator Station

Each pump will have a local operator station (LOS) equipped with switches for local controls as needed for regular operation and maintenance. LOSs will be wall or pedestal mounted in the Headworks Room and will have the following minimum functions:

- HOA (Hand-Off-Auto) switch
- Pump RUN indication light (green)
- Pump FAULT indication light (red)
- RESET button

2.2 Sequence of Operation

2.2.1 HAND Operation

When the HOA switch at the LCP for a given pump is in the HAND position, the pump runs continuously at the last input setpoint speed. The speed can be entered to the PCS via the HMI prior to switching to HAND operation. The pump speed can be changed at the MCC VFD keypad at any time. The pump motor operates until the LOS HOA switch is turned to OFF, a fault occurs, or power to the pump is lost. If a pump is turned to HAND or OFF at the LOS, the PCS and MCC do not control pump starts and stops.

2.2.2 AUTOMATIC (AUTO) Operation

During normal operation, the HOA switches at the LOS, VFD keypad, and PCS will be in the AUTO position and the PCS will control the pumps.

During AUTO operation the PCS will turn the pumps on and off at designated water level setpoints. The PCS will also control pump alternation and duty, standby designation. The table below lists recommended set points for the effluent pumping operation. Should effluent flows be vastly different than forecasted, operators can adjust setpoint elevations to accommodate larger flows while maintaining minimum pump run times and manufacturer-required maximum number of starts per hour.

Normal Mode Set Point (Tag)	Elevation* (ft)
Low Level Alarm	1.0
Pump Off Setpoint	4.5
Maintain Level Setpoint	5.5
High Level Setpoint	6.6
High Level Alarm	7.0
*Measured from Finished floor.	

2.2.3 OFF Operation

In the event of the PCS pump switch being turned to the OFF position or because of equipment Fault, the PCS will automatically start the standby pump.

2.2.4 FAULT Signals

- Pump motors will stop immediately if high motor current is detected. Under any of these conditions an external fault alarm will be generated at the PCS. These faults must be reset by pressing the RESET button at the pump LOS.
- A pump fault occurs when the pump fails to start, and an alarm is generated at the PCS.
- A communication fault occurs if there is an issue with signal connectivity and the PCS is no longer receiving or sending signals from/to the MCC or the equipment; a communication fault alarm is generated at the PCS.

3. EMERGENCY SHUT DOWN AND POWER FAILURE

3.1 Emergency Shutdown

In the event of an emergency shutdown of an effluent pump by turning the LOS switch to the OFF position or because of equipment failure, the PCS will automatically start the standby and the duty pump will become the standby pump.

3.2 Power Failure

In the event of a power failure, any equipment that was running in AUTO or HAND will be started up once the standby generator comes online. Equipment startup is controlled by the PCS, which staggers startup of the process equipment to reduce instantaneous load on the standby generator.

4. CONTROL SYSTEMS DETAILS

4.1 Controls and Interlocks

4.1.1 PCS Interlocks

- The Low level float in the Reclaimed Effluent tank will prevent the effluent pumps from running in either HAND or AUTO mode.

4.2 Plant Control System Tags

Legend:

- D – Display on a screen
- S – Display and operator input on a screen
- Alarm Level Priority 1
- Alarm Level Priority 2
- Alarm Level Priority 3
- L – Logged to database
- T – Display on trend

Table 3 lists the LCP tags and signals all signals will be repeated to the PCS. The following list may not contain all required Plant Control System tags and signals. The contractor is to do a detailed take-off from all drawings and specifications and determine all required tags and signals. For the HMI, use a red light or red text to indicate a fault has occurred, or a level float has been switched on.

Table 3: Effluent Pump Station LCP/PCS Tags and Signals

Signal/Tag Description	Display and Register Type	Alarm Level	Trend/Logging	Notes
Effluent #1 Running Mode	D		L	
Effluent #1 Faulted Mode	D	2	L	
Effluent #1 External Fault	D	2	L	
Effluent #1 Comm. Fault	D	2	L	
Effluent #1 Current	D		L, T	Show units, Amps
Effluent #1 Runtime Hours	D		L	Show units, hr
Effluent #2 Running Mode	D		L	

Signal/Tag Description	Display and Register Type	Alarm Level	Trend/Logging	Notes
Effluent #2 Faulted Mode	D	2	L	
Effluent #2 External Fault	D	2	L	
Effluent #2 Comm. Fault	D	2	L	
Effluent #2 Current	D		L, T	Show units, Amps
Effluent #2 Runtime Hours	D		L	Show units, hr
Operating Pump Speed Feedback	D		L, T	Show units, %
Alternate Effluent Next to Operate in PCS	S			
Radar Level Transducer – Level Indication	D		L, T	Show Units, Feet Above Bottom
Radar Level Transducer – Fault	D	2	L	
Low Level Float Active	D		L	

SECTION 406121 – PICS PROCESS TAPS AND PRIMARY ELEMENTS – WWTP

PART 1 - GENERAL

1.1 WORK INCLUDED

A. This section covers furnishing and installing Process Instrumentation and Control Systems (PICS) taps and primary elements on this project, complete. All equipment, products, and execution must meet all requirements detailed in this Specification.

1.2 GENERAL REQUIREMENTS

A. Also see the GENERAL CONDITIONS, Division 01, GENERAL REQUIREMENTS, and Section 406110, PROCESS INSTRUMENTATION AND CONTROLS SYSTEM (PICS) GENERAL REQUIREMENTS-WWTP which contain information and requirements that apply to the work specified herein and are mandatory for this project.

B. Like items of equipment or materials provided hereunder shall be the end products of one manufacturer to achieve standardization for appearance, maintenance, and replacement, and shall include all necessary appurtenances for a complete and working system. The equipment or materials shall be the product of a manufacturer regularly engaged in the production of equipment or materials for the specified use. The manufacturer shall have the sole responsibility for the proper functioning and coordination of the equipment or materials as furnished.

C. The Contractor or the PICS Sub-contractor shall provide all required miscellaneous equipment and materials, as shown on the Drawings and in accordance with these Specifications. The Contractor or the PICS Sub-contractor shall furnish all equipment and material items, whether specified or not, as necessary to provide a complete, operable instrumentation and control (I&C) system.

1.3 SUBMITTALS

A. Submittals shall be provided as specified in Section 013300, SUBMITTAL PROCEDURES and Section 406110, PROCESS INSTRUMENTATION AND CONTROL SYSTEMS (PICS) GENERAL REQUIREMENTS-WWTP.

B. Submit product descriptive data for each type of I&C element used on this project.

PART 2 - PRODUCTS

2.1 PROCESS TAPS

A. Provide taps in process piping for pressure gauges, pressure sensors, thermowells and other similar instruments.

B. Coordinate with the requirements in appropriate sections in Division 40, PROCESS INTERCONNECTIONS-WWTP; Division 43, PROCESS GAS AND LIQUID HANDLING EQUIPMENT-WWTP; and Division 46, WATER AND WASTEWATER EQUIPMENT-WWTP. Refer to the P&ID Drawings and other process and piping Drawings for installation details.

2.2 PRIMARY ELEMENTS

A. Provide primary elements and transmitters as specified in Section 406171, PICS INSTRUMENT SPECIFICATIONS-WWTP.

B. Provide written assurance that the instrument manufacturer approves the selection of materials of primary elements, which are in contact with the specified process fluid and

inert to the effects of the process fluid.

C. Where needed for process lines not containing clean water or air; pressure gauges, sensors, and pressure switches shall be isolated from the process liquid by a diaphragm seal or an annular seal as shown on the Drawings. Provide diaphragm seals and annular seals as shown on the Drawings and ISS. Refer to the P&ID Drawings, Division 40 instrument standard detail Drawings and Divisions 40, 43 and 46 installation details.

D. The diaphragm seal isolator shall consist of a 316 stainless steel housing and a Buna-N flexible liner. The diaphragm seal shall have the capability of being isolated so that in the event of plugging, the elastomer slurry ring area, which isolates the instrument, can be flushed. The diaphragm seal shall be tapped for a ½-inch NPT gauge connection. Diaphragms shall be “Red Valve Series 42 Diaphragm Seals” with isolation valves for flushing or “Red Valve Series 40 Diaphragm Seals” (isolation rings) for in-line installations. Mini diaphragm seals (pressure elements) shall be WIKA L990.10.

E. Provide ethylene glycol factory filled assembly calibrated by the manufacturer when in-line pressure sensors are specified with a pressure gauge, pressure switch, pressure sensor, and/or other instrument. All necessary fittings to be provided by the Contractor or PICS Sub-contractor.

F. Isolators shall be assembled to the associated pressure switches, gauges and sensors by the isolator manufacturer in their factory.

PART 3 - EXECUTION

3.1 EXECUTION REFERENCES

A. Refer to the I&C Drawings and other details in the Drawings.

END OF SECTION

SECTION 406124 – PICS INSTRUMENTATION CABLE – WWTP

PART 1 - GENERAL

1.1 WORK INCLUDED

A. This section covers furnishing and installing Process Instrumentation and Control Systems (PICS) cables on this project, complete. All materials and execution must meet all requirements detailed in this Specification.

1.2 GENERAL REQUIREMENTS

A. Also see the GENERAL CONDITIONS, Division 01, GENERAL REQUIREMENTS, and Section 406110, PROCESS INSTRUMENTATION AND CONTROLS SYSTEM (PICS) GENERAL REQUIREMENTS-WWTP which contain information and requirements that apply to the work specified herein and are mandatory for this project.

B. Like items of equipment or materials provided hereunder shall be the end products of one manufacturer to achieve standardization for appearance, maintenance, and replacement, and shall include all necessary appurtenances for a complete and working system. The equipment or materials shall be the product of a manufacturer regularly engaged in the production of equipment or materials for the specified use. The manufacturer shall have the sole responsibility for the proper functioning and coordination of the equipment or materials as furnished.

C. The Contractor or the PICS Sub-contractor shall provide all required miscellaneous equipment and materials, as shown on the Drawings and in accordance with these Specifications. The Contractor or the PICS Sub-contractor shall furnish all equipment and material items, whether specified or not, as necessary to provide a complete, operable instrumentation and control (I&C) system.

1.3 SUBMITTALS

A. Submittals shall be provided as specified in Section 013300, SUBMITTAL PROCEDURES and Section 406110, PROCESS INSTRUMENTATION AND CONTROL SYSTEMS (PICS) GENERAL REQUIREMENTS-WWTP.

B. Submit product descriptive data for each type of instrumentation cable used on this project.

PART 2 - PRODUCTS

2.1 APPLICABLE STANDARDS

A. All wire and cable used on this project shall be UL approved.

2.2 TWISTED PAIR SHIELDED CABLES (TPSH)

A. TPSH shall be constructed as follows:
   1. Two copper conductors, stranded, minimum #18 AWG, PVC insulated, twisted in nominal intervals of 2 inches.
   2. Insulated for 300V, 190 degrees F.
   3. One hundred percent coverage aluminum foil or tape shield.
   4. Separate bare stranded copper drain wire, minimum #18 AWG.
   5. Overall flame retardant PVC jacket.
   6. The entire cable assembly shall be suitable for pulling in conduit.

7. Belden, or Engineer approved equivalent.

B. Where multi-conductor TPSH cables are called for on the Drawings, each pair shall be individually shielded, continuous number coded, and the cable assembly shall have an overall shield and overall flame retardant PVC jacket.

2.3 RTD AND MULTI-CONDUCTOR SHIELDED CABLE

A. RTD and multi-conductor cables shall be constructed as follows:
1. Three or more copper conductors, stranded, minimum #18 AWG.
2. PVC insulated for 300V.
3. One hundred percent coverage aluminum foil or tape shield.
4. Separate bare stranded copper drain wire.
5. Overall flame retardant PVC jacket.
6. The entire cable assembly shall be suitable for pulling in conduit.
7. Belden, or Engineer approved equivalent.

2.4 DIGITAL SIGNALS

A. Use TPSH cable for all low-level input signals (24 Volt and below) and output signals to the plant control system.

B. Use wire and conduit for power to instruments, for 120 Volt signals other than those mentioned above, and as otherwise indicated on the Drawings. Use stranded wire and cable to supply power to instruments.

C. For discrete signals and wiring, use #14 THWN. Color code shall be:
1. White 120VAC neutral
2. Black 120VAC hot
3. Red 24VDC positive
4. Blue 24VDC negative
5. Orange Discrete Inputs
6. Yellow Discrete Outputs
7. Brown All other wires
8. Green Ground

2.5 INSTRUMENT POWER SUPPLY – 120 VOLTS AC

A. Use 2C + GND #12 wires unless otherwise noted.

PART 3 - EXECUTION

3.1 INSTALLATION

A. Use TPSH cable for all low level analog signals such as 4-20 mA, 1-5 VDC, 0-10 VDC, pulse type circuits 24 VDC and under, and other signals of a similar nature.

B. Use RTD cable for connections between RTDs and transmitters.

C. Install all instrumentation cables in conduits. Use a minimum of 1-foot length of liquid tight flexible conduit to connect the field sensors to the conduit. Refer to Division 26 00 00, ELECTRICAL for conduit or cable tray requirements.

D. Where non-armored instrumentation cables are installed in cable trays, provide barriers in the tray to separate instrumentation cables from power cables.

E. At each end of the run, leave sufficient cable length for termination.

F. Do not make splices in any of the instrumentation cable runs. Where splices are considered to be required, obtain approval from the Engineer prior to installing the cable. Do not splice cables to gas detection heads.

G. Where splices are necessary in instrumentation cables other than coaxial cables, perform such splices on terminal blocks in terminal boxes. Keep splices in instrumentation cable to a minimum and separated physically from power circuits. Cable shields shall be terminated on insulated terminals and carried through to the extent of the cable.

H. Ground TPSH cable shields at one end only. Unless otherwise specified, ground the shields at the marshalling / local control panels.

I. Protect all conductors against moisture during and after installation.

J. Terminate all cable armor with approved connectors.

3.2 CONDUCTOR TERMINATIONS

A. All equipment supplied shall be equipped with terminal blocks to accept conductor connections.

B. Instrumentation conductors, where terminated at equipment terminals other than clamping type terminal blocks, shall be equipped with Burndy-YAE-2 or STA-KON, self-insulated, locking type terminators, sized as required to fit conductors and screw terminals.

3.3 TESTING

A. Test all conductors for opens, shorts, or grounds. Resistance values shall not be less than those recommended by the cable manufacturer.

3.4 IDENTIFICATION

A. Identify all instrumentation cables and each conductor with wire numbers using a machine printed heat shrink wire marker, similar to Raychem TMS or approved equal.

END OF SECTION

SECTION 406127 – PICS INDUSTRIAL ETHERNET NETWORK – WWTP

PART 1 - GENERAL

1.1 WORK INCLUDED

A. This section covers furnishing and installing a Process Instrumentation and Control Systems (PICS) Industrial Ethernet Network communication system on this project, complete. All equipment, materials, and execution must meet all requirements detailed in this Specification.

1.2 GENERAL REQUIREMENTS

A. Also see the GENERAL CONDITIONS, Division 01, GENERAL REQUIREMENTS, and Section 406110, PROCESS INSTRUMENTATION AND CONTROLS SYSTEM (PICS) GENERAL REQUIREMENTS-WWTP which contain information and requirements that apply to the work specified herein and are mandatory for this project.

B. Like items of equipment or materials provided hereunder shall be the end products of one manufacturer to achieve standardization for appearance, maintenance, and replacement, and shall include all necessary appurtenances for a complete and working system. The equipment or materials shall be the product of a manufacturer regularly engaged in the production of equipment or materials for the specified use. The manufacturer shall have the sole responsibility for the proper functioning and coordination of the equipment or materials as furnished.

C. The Contractor or the PICS Sub-contractor shall provide all required miscellaneous equipment and materials, as shown on the Drawings and in accordance with these Specifications. The Contractor or the PICS Sub-contractor shall furnish all equipment and material items, whether specified or not, as necessary to provide a complete, operable instrumentation and control (I&C) system.

D. All Industrial Ethernet Network equipment and materials shall be rated for industrial use.

1.3 SUBMITTALS

A. Submittals shall be provided as specified in Section 013300, SUBMITTAL PROCEDURES and Section 406110, PROCESS INSTRUMENTATION AND CONTROL SYSTEMS (PICS) GENERAL REQUIREMENTS-WWTP.

B. Submit product descriptive data for each type of Industrial Ethernet Network element used on this project.

PART 2 - PRODUCTS

2.1 CABLES

A. Provide Industrial Ethernet Cat6 24 AWG Bonded-Pair cables with industrial grade PVC outer jacket cable.

B. Maximal Distance: 295 feet.

C. Color Code: Blue.

D. Ethernet cables shall be non-armored, designed to be installed in dedicated conduits.

E. Voltage Rating: 600VAC for MCC cables and 300VAC for all other cables. All Ethernet cables within control panels and MCCs shall be provided with minimum 480VAC rated insulation.

F. No splices are allowed.

G. Ethernet cables for connection between control panels shall be Belden 7953A or Engineer approved equal.

H. Ethernet cables for connection between control panels and MCCs and internal MCC connections shall be Belden 7953A or Engineer approved equal.

I. Manufacturer and cable type shall be Belden DataTuff Category 6 Twisted Pair Cables or Engineer approved equal.

2.2 ETHERNET SWITCHES

A. Provide the following Ethernet switch dedicated for the Plant Control System (PCS) SCADA Ethernet Network:
   1. Managed Ethernet Switch.
   2. Dual 24VDC power supply.
   3. 120VAC rated dry contact for fault indication.
   4. Twenty 100Mbps copper ports.
   5. SD Flash card.
   6. Ethernet Switch: 1783CMS10DP.
   7. Rockwell Automation: Stratix 5200 Series or Engineer approved equal.

B. Provide the following Ethernet switch as required for the WWTP PCS Ethernet Network:
   1. Unmanaged Ethernet Switch.
   2. Dual 24VDC power supply.
   3. Five 100Mbps copper ports.
   4. Ethernet Switch: 1783-US5T.
   5. Rockwell Automation: Stratix 2000 Series or Engineer approved equal.

2.3 ETHERNET DEVICE PARAMETERS

The following Ethernet Device parameters shall be accessible through the Ethernet network:

1. Power Monitors:
   a. Active Power
   b. Reactive Power
   c. Power Factor
   d. Average Voltage
   e. Average Current
   f. L1 Current
   g. L2 Current
   h. L3 Current
   i. L1 Voltage
   j. L2 Voltage
   k. L3 Voltage
   l. Power Fault

2. VFDs:
    a. Inputs:
        1. Ready
        2. Running
        3. At Speed
        4. Fault
        5. Warning
        6. Motor Current
        7. Motor Frequency
        8. Fault Code
        9. Digital Inputs Status
    b. Outputs:
        1. Start/Stop Command
        2. Fault Reset
        3. Motor Speed Command
3. Smart Overloads:
    a. Inputs:
        1. Running
        2. Warning
        3. Faulted
        4. Input #1
        5. Input #2
        6. Input #3
        7. Input #4
        8. Output #1
        9. Output #2
        10. Motor Current
        11. Fault Status
        12. Warning Status
    b. Outputs:
        1. Output #1
        2. Output #2
        3. Fault Rest
4. RVSSs:
    a. Inputs:

1. Running
2. Warning
3. Faulted
4. Input #1
5. Input #2
6. Input #3
7. Input #4
8. Output #1
9. Output #2
10. Motor Current
11. Fault Status
12. Warning Status

b. Outputs:

1. Output #1
2. Output #2
3. Fault Rest

PART 3 - EXECUTION

3.1 INDUSTRIAL ETHERNET NETWORK INSTALLATION

A. All non-armored Cat6 cables shall be installed in dedicated communication conduits. Only armored Cat6 cable shall be used in non-dedicated wireways, cable trays, and underground conduits.

B. All Ethernet cables within control panels and MCCs shall be installed separately from power wires and using minimum 480VAC rated insulation.

C. Connect devices as indicated on the Drawings.

D. All installation shall be in accordance with the manufacturer’s instructions and good network practices.

E. The Default Gateway address shall be setup as: 192.168.100.1. PICS Sub-contractor may adapt these addresses as needed to create a fully functional gateway. Submit documentation on all gateway addresses.

F. Setup and test TCP/IP addresses for all listed equipment in the table below. Subnet mask for all devices is 255.255.255.0. PICS Sub-contractor may adapt these addresses as needed to create a fully subnet mask. Submit documentation on all subnet addresses.

1. Hospital WWTP:

Equipment	TCP/IP Address	Notes
PCS Computer	192.168.100.2 192.168.100.3	Main Port Spare Port
PCS Control Panel, CTU-1000	192.168.100.4 to 192.168.100.7	PLC CTU-1000 OIT
Power Monitor in MCC-11	192.168.100.8	
MCC-11	192.168.100.10 to 192.168.100.19	Plant MCC
LCP-1100-01 (Headworks)	192.168.100.20	PLC
	192.168.100.21	OIT
LCP-1300-01 (MBR Train 1)	192.168.100.25	MBR #1 PLC
	192.168.100.26	MBR #1 OIT
LCP-1400-01 (MBR Train 2)	192.168.100.27	MBR #2 PLC
	192.168.100.28	MBR #2 OIT
LCP-1500-01 (MBR Train 3)	192.168.100.29	MBR #3 PLC
	192.168.100.30	MBR #3 OIT
LCP-1910-01 (UV #1)	192.168.100.31	UV #1 PLC
	192.168.100.32	UV #1 OIT
LCP-1910-02 (UV #2)	192.168.100.33	UV #2 PLC
	192.168.100.34	UV #2 OIT
LCP-1910-03 UV #3)	192.168.100.35	UV #3 PLC
	192.168.100.36	UV 3 OIT
LCP-1910-04 (UV #4)	192.168.100.37	UV #4 PLC
	192.168.100.38	UV#4 OIT
LCP-1730-01 (Dewatering System)	192.168.100.39	PLC
	192.168.100.40	OIT
LCP-1810-01 (NPW System)	192.168.100.41	PLC
	192.168.100.42	OIT
LCP-1820-01 (Odor Control)	192.168.100.43 192.168.100.44	PLC OIT
LCP-1010-01 (Lift Station)	192.168.100.45 192.168.100.46	PLC OIT

2. Hon-Dah WWTP:

Equipment	TCP/IP Address	Notes
PCS Computer	192.168.200.2 192.168.200.3	Main Port Spare Port
PCS Control Panel, CTU-2000	192.168.200.4 to 192.168.200.7	PLC CTU-1000 OIT
Power Monitor in MCC-21	192.168.200.8	
MCC-21	192.168.200.10 to 192.168.200.19	Plant MCC
LCP-12100-01 (Headworks)	192.168.200.20	PLC
	192.168.200.21	OIT
LCP-2300-01 (MBR Train 1)	192.168.200.25	MBR #1 PLC
	192.168.200.26	MBR #1 OIT
LCP-2400-01 (MBR Train 2)	192.168.200.27	MBR #2 PLC
	192.168.200.28	MBR #2 OIT
LCP-2500-01 (MBR Train 3)	192.168.200.29	MBR #3 PLC
	192.168.200.30	MBR #3 OIT
LCP-2910-01 (UV #1)	192.168.200.31	UV #1 PLC
	192.168.200.32	UV #1 OIT
LCP-2910-02 (UV #2)	192.168.200.33	UV #2 PLC
	192.168.200.34	UV #2 OIT
LCP-2910-03 (UV #3)	192.168.200.35	UV #3 PLC
	192.168.200.36	UV 3 OIT
LCP-2910-04 (UV #4)	192.168.200.37	UV #4 PLC
	192.168.200.38	UV#4 OIT
LCP-2730-01 (Dewatering System)	192.168.200.39	PLC
	192.168.200.40	OIT
LCP-2810-01 (NPW System)	192.168.200.41	PLC
	192.168.200.42	OIT
LCP-2820-01 (Odor Control)	192.168.200.43 192.168.200.44	PLC OIT
LCP-2840-01 (Reclaimed Water)	192.168.200.45 192.168.200.46	PLC OIT
LCP-2010-01 (Lift Station)	192.168.200.45 192.168.200.46	PLC OIT

G. Prior to the final commissioning and demonstration, test the TCP/IP configuration from the main Ethernet switch using PING command and verify all links with Active Supervisory role and two nodes with Back-up Supervisory role.

H. Performance degradation of the Ethernet communication links will occur if the Cat6 cables are exposed to extreme high-frequency noise. It is the Contractor's and PICS Sub-contractor's responsibility to properly route cables and condition power to the equipment in order to assure communication reliability.

END OF SECTION

SECTION 406128 – PICS MISCELLANEOUS EQUIPMENT – WWTP

PART 1 - GENERAL

1.1 WORK INCLUDED

A. This section covers furnishing and installing miscellaneous instrumentation and control equipment for the Process Instrumentation and Control Systems (PICS) on this project, complete. All equipment, products, and execution must meet all requirements detailed in this Specification.

1.2 GENERAL REQUIREMENTS

A. Also see the GENERAL CONDITIONS, Division 01, GENERAL REQUIREMENTS, and Section 406110, PROCESS INSTRUMENTATION AND CONTROLS SYSTEM (PICS) GENERAL REQUIREMENTS-WWTP which contain information and requirements that apply to the work specified herein and are mandatory for this project.

B. Like items of equipment or materials provided hereunder shall be the end products of one manufacturer to achieve standardization for appearance, maintenance, and replacement, and shall include all necessary appurtenances for a complete and working system. The equipment or materials shall be the product of a manufacturer regularly engaged in the production of equipment or materials for the specified use. The manufacturer shall have the sole responsibility for the proper functioning and coordination of the equipment or materials as furnished.

C. The Contractor or the PICS Sub-contractor shall provide all required miscellaneous equipment and materials, as shown on the Drawings and in accordance with these Specifications. The Contractor or the PICS Sub-contractor shall furnish all equipment and material items, whether specified or not, as necessary to provide a complete, operable instrumentation and control (I&C) system.

1.3 SUBMITTALS

A. Submittals shall be provided as specified in Section 013300, SUBMITTAL PROCEDURES and Section 406110, PROCESS INSTRUMENTATION AND CONTROL SYSTEMS (PICS) GENERAL REQUIREMENTS-WWTP.

B. Submit product descriptive data for each type of I&C equipment item, accessory, and component used on this project.

1.4 QUALITY ASSURANCE, CODES AND STANDARDS

A. As a minimum, the design, materials and construction of the miscellaneous I&C equipment shall comply with the applicable requirements and recommendations of the following Codes and Standards. The latest edition in force at the time of purchase shall apply.

1. Electrical Components, Devices, and Accessories: Listed and labeled as defined in NFPA 70, National Electrical Code by a qualified testing agency, and marked for intended location and application.
2. UL.
3. All applicable State of Arizona regulations.

PART 2 - PRODUCTS

2.1 GENERAL REQUIREMENTS

A. Unless otherwise specifically noted, use normally open contacts for alarm actuation which shall close to initiate the alarm.

B. Use normally open contact outputs to control equipment. The contacts shall close to start the equipment.

C. For contacts monitored by solid state equipment, such as programmable controllers or annunciators, hermetically seal and design for switching currents from 20 to 100 mA at 24 volts DC.

D. For contacts monitored by electromagnetic devices, such as mechanical relays, rate NEMA ICS 2, designation B300.

E. Provide double barriers between switch elements and process fluids so that failure of one barrier will not permit process fluids into electrical enclosures.

F. Use switch electrical enclosures that are rated NEMA 4X as a minimum.

G. Unless specifically otherwise noted, use 120 VAC switches that have a minimum 4A rating.

H. Make all contacts in Class 1, Divisions 0 and 1 areas monitored by solid-state circuits safe by suitable intrinsic safety barriers or relays.

2.2 SELECTOR SWITCHES

A. Selector switches shall be 2 or 3 position maintained, unless indicated spring return, as per the Drawings and these Specifications.

B. Mounting hole size shall be 30.5 mm (1.2 inches) with standard knob, front enclosure NEMA 4 with front panel mounting, ring mounting method.

C. One million mechanical cycles.

D. Legend with legend as indicated on the Drawings and these Specifications.

E. Each position shall have minimum two sets of contacts rated at 10A at 120VAC.

F. Approvals: UL.

G. Approved manufacturer shall be Allen Bradley Bulletin 800T or Engineer approved equal.

2.3 PILOT LIGHTS

A. Cap color as per the Drawings and these Specifications.

B. Mounting hole size shall be 30.5 mm (1.2 inches) with standard know, front enclosure NEMA 4 with front panel mounting, ring mounting method.

C. LED type, voltage rating as per the Drawings and these Specifications.

D. Voltage Rating: 120VAC unless otherwise indicated on the Drawings and these Specifications.

E. Legend plate with legend as indicated on the Drawings and these Specifications.

F. Push to test type.

G. Approval: UL.

H. Approved manufacturer shall be Allen Bradley Bulletin 800T or Engineer approved equal.

2.4 PUSH BUTTONS

A. Flush head unit.

B. Mounting hole size shall be 30.5 mm (1.2 inches) with standard know, front enclosure NEMA 4 with front panel mounting, ring mounting method.

C. 250,000 mechanical cycles.

D. Legend plate with legend as indicated on the Drawings and these Specifications.

E. Each position shall have a minimum of three sets of Normally Open contacts rated at 120VAC.

F. Approval: UL.

G. Approved manufacturer shall be Allen Bradley Bulletin 800T or Engineer approved equal.

2.5 CIRCUIT BREAKERS IN CONTROL PANELS

A. Finger safe design.

B. A positively trip-free mechanism (breaker cannot be defeated by holding the handle in the ON position) shall be provided.

C. Mounts on DIN rail.

D. Tripping Characteristics: Type C.

E. Maximum Voltage: 240VAC.

F. Electromechanical Life: 6000 operations (1 operation = 2 switching events ON/OFF).

G. Interrupt Rating: 1 pole 10kA @240VAC.

H. Approval: UL.

I. Approved manufacturer: Allen Bradley or Engineer approved equal.

2.6 GENERAL PURPOSE RELAYS

A. 4 DPDT AgCdO contacts, rated 10A at 120VAC.

B. Coil voltage as required (24VDC, 24VAC, 120VAC).

C. Plug-in quick connect solder terminals.

D. DIN rail mounted bas with screw terminals.

E. LED or mechanical relay status indication.

F. Life Expectancy: 250,000 cycles.

G. Approval: UL.

H. Approved Manufacturer: Allen Bradley Bulletin 1492-SPU or Engineer approved equal.

2.7 MAGNETIC FLOWMETERS INTERPOSING RELAYS

A. Solid state relay.

B. Load Voltage: 120VAC.

C. Control (Input) Voltage: 24VDC.

D. DIN rail mounted bas with screw terminals.

E. LED relay status indication.

F. Life Expectancy: 200,000 energized hours.

G. Approvals: UL.

H. Approved Manufacturer: Allen Bradley Bulletin 800-SK or Engineer approved equal.

2.8 PLC DIGITAL OUTPUT INTERPOSING RELAYS

A. One SPDT contact.

B. Contact Voltage: 24VDC, 120VAC.

C. Control (Input) Voltage: 24VDC.

D. DIN Rail mounted.

E. LED or mechanical relay status indication.

F. Approvals: UL.

G. Approved Manufacturer: Phoenix Contact – type REL-MR 2961105 with relay socket PLC-BPT-24DC/21 2900445 or Engineer approved equal.

2.9 E-STOP SWITCH

A. Push – Pull and Twist to release:
   1. Two positions.
   2. Non-illuminated.
   3. Additional Contacts: 3 Normally Open and 3 Normally Closed.
   4. Built-in Contacts: 1 Normally Open and 1 Normally Closed.
   5. UL Approved.
   6. Approved Manufacturer and Model: Allen Bradley 800T-FX6A1 or Engineer approved equal

2.10 KEY SWITCHES

A. Two position – maintained:
   1. Mounting hole size shall be 30.5 mm (1.2 inches) with standard know, front enclosure NEMA 4 with front panel mounting, ring mounting method.
   2. Contacts: Each position 120VAC rated Normally Open and Normally Closed contact.
   3. UL Approved.
   4. Approved Manufacturer and Model: Allen Bradley 800T or Engineer approved equal.

PART 3 - EXECUTION

3.1 EXECUTION REFERENCES

A. Refer to the I&C Drawings.

B. Refer to Section 406110, PICS GENERAL REQUIREMENTS-WWTP.

C. Refer to Section 406115, PICS SCOPE OF WORK-WWTP.

3.2 OTHER INSTALLATION REQUIREMENTS

A. Locate and wire all miscellaneous equipment as shown on the Drawings. Perform all work in accordance with the manufacturer’s equipment installation and user manuals.

END OF SECTION

SECTION 406140 – PICS INSTRUMENTATION REQUIREMENTS – WWTP

PART 1 - GENERAL

1.1 WORK INCLUDED

A. This section covers requirements for Process Instrumentation and Control Systems (PICS) instruments on this project, complete. All equipment, products, and execution must meet all requirements detailed in this Specification.

1.2 GENERAL INSTRUMENTATION REQUIREMENTS AND QUALITY

A. Also see the GENERAL CONDITIONS, Division 01, GENERAL REQUIREMENTS, and Section 406110, PROCESS INSTRUMENTATION AND CONTROLS SYSTEM (PICS) GENERAL REQUIREMENTS-WWTP which contain information and requirements that apply to the work specified herein and are mandatory for this project.

B. Like items of equipment or materials provided hereunder shall be the end products of one manufacturer to achieve standardization for appearance, maintenance, and replacement, and shall include all necessary appurtenances for a complete and working system. The equipment or materials shall be the product of a manufacturer regularly engaged in the production of equipment or materials for the specified use. The manufacturer shall have the sole responsibility for the proper functioning and coordination of the equipment or materials as furnished.

C. The Contractor or the PICS Sub-contractor shall provide all required miscellaneous equipment and materials, as shown on the Drawings and in accordance with these Specifications. The Contractor or the PICS Sub-contractor shall furnish all equipment and material items, whether specified or not, as necessary to provide a complete, operable instrumentation and control (I&C) system.

D. Provide instruments with conformably coated printed circuit boards if available from the listed manufacturers in order to prevent damage by dust, moisture, fungus, and airborne contaminants.

E. Provide instruments complete with mounting hardware, floor stands, sunshades, wall brackets, or instrument racks as required by the installation and/or manufacturer.

F. Provide instrument enclosures NEMA rated for the environment. In hazardous areas, meet the Area and zone rating as shown on the Drawings or as specified. In areas subject to flooding, provide submergence rated enclosures. Enclosures in process areas shall be a minimum of NEMA 4 / 4X.

G. Provide instrumentation of rugged construction designed for the site conditions. Provide only new, standard, high-grade materials throughout, conforming to standards established by Underwriter's Laboratories (UL), Inc., approved and so marked or labeled, together with manufacturer's brand or trademark.

H. Provide material and equipment in accordance with applicable codes and standards, except as modified by the specifications.

I. Use a single source manufacturer for each instrument type. Use the same manufacturer for different instrument types whenever possible.

J. Coordinate instrumentation to assure proper interface and system integration. Provide signal processing equipment, to include, but not be limited to, process sensing and measurement, transducers, signal converters, conditioners, transmitters, receivers and power supplies.

1.3 SUBMITTALS

A. Submittals shall be provided as specified in Section 013300, SUBMITTAL PROCEDURES and Section 406110, PROCESS INSTRUMENTATION AND CONTROL SYSTEMS (PICS) GENERAL REQUIREMENTS-WWTP.

B. Submit the following information for each type of I&C instrument model used on this project:
   1. Manufacturer's design and performance specification data and descriptive literature.
   2. Equipment dimensioning and installation requirements and recommendations.
   3. Required and optional accessories lists.
   4. Electrical/pneumatic signal and power connection diagrams.
   5. Operation and maintenance documentation for each type instrument after product approval.
   6. Calibration certifications from the manufacturer for each calibrated instrument.
   7. List of recommended spare parts and spare parts to be provided.
   8. List of optional accessories.

C. Submit the following for each instrument provided:
   1. Tag number and description.
   2. Complete model number.
   3. Instrument Data Sheets (ISA Standard -S20) with all fields completed.
   4. Catalog literature edited to indicate specific items provided.
   5. Mounting details for all typical installation requirements and special details for non-typical applications.
   6. Methods and materials required for installation. Include power and signal connection details.
   7. Other specific submittal information as specified in the particular instrument specification.

1.4 QUALITY ASSURANCE, CODES AND STANDARDS

A. As a minimum, the design, materials and construction of all instruments shall comply with the applicable requirements and recommendations of the following Codes and Standards. The latest edition in force at the time of purchase shall apply.
   1. Electrical Components, Devices, and Accessories: Listed and labeled as defined in NFPA 70, National Electrical Code by a qualified testing agency, and marked for intended location and application.
   2. UL.
   3. All applicable State of Arizona regulations.
   4. Instrument Systems and Automation Society, ISA-S50.1, Compatibility of Analog Signals for Electronic Industrial Process Instruments.
   5. ISA Standard S20: Specification Forms for Process Measurement and Control Instruments, Primary Elements and Control Valves.
   6. Factory Mutual (FM) approval for explosion proof and intrinsic safety instruments.

PART 2 - PRODUCTS

2.1 INSTRUMENTS

A. Provide instrumentation as required and specified in Section 406171, PICS INSTRUMENT SPECIFICATIONS-WWTP to provide a fully functioning Instrumentation and Control system.

B. In general, alarm contacts shall close to alarm. Normally closed contacts that open on detection of the alarm condition or loss of power are only required for high priority critical or safety shutdown/interlock alarms.

C. Magnetic flow meters, hydrostatic, and pressure transmitters shall have 4-20mA output.

D. Ultrasonic and radar level transmitters shall have 4-20mA output and 120VAC rated dry contact for fault indication.

E. Gas Detection Systems shall have 4-20mA output and 120VAC rated dry contact for fault indication.

F. For more information about instruments I/O and communication and power wiring requirements, refer to the specific instrument's user and installation manuals.

2.2 INSTRUMENT MANUFACTURERS

A. Provide instruments from the manufacturers listed in the ISSs in Section 406171, INSTRUMENT SPECIFICATION SHEETS-WWTP.

PART 3 - EXECUTION

3.1 EXECUTION REFERENCES

A. Refer to the I&C Drawings.

B. Refer to Section 406110, PICS GENERAL REQUIREMENTS-WWTP.

C. Refer to Section 406115, PICS SCOPE OF WORK-WWTP.

3.2 DELIVERY, STORAGE, AND HANDLING

A. Provide and securely attach the tag number and instructions for proper field handling and installation to each instrument prior to packaging.

B. Package instrumentation to provide protection against shipping damage, dust, moisture, and atmospheric contaminants.

C. Include a shipping label which contains the following information:
   1. Tag number and description.
   2. Instructions for unloading, transporting, storing, and handling at the site.

3.3 INSTALLATION

A. All transmitters installed outside shall have sun-shade protection.

B. Provide wiring power supply for all 24VDC powered instruments.

C. Provide analog and digital wiring for all instruments. All required conduits shall be provided by Division 26, ELECTRICAL-WWTP.

D. Provide lamacoid or stainless-steel labels for each instrument. The label shall indicate the instrument tag and description.

E. All 120VAC powered instruments shall be powered from the UPS system.

3.4 SETUP, STARTUP, AND COMMISSIONING

A. Setup, test, startup and commission all instruments.

B. The Contractor and/or PICS Sub-contractor shall allow for services of a qualified equipment representative to carry out setup and testing of all instruments.

END OF SECTION

SECTION 406160 – PLC I-O INDEX – WWTP

PART 1 - GENERAL

1.1 WORK INCLUDED

A. As part of the submittal process, the PICS contractor shall submit an itemized list of the input and output (I/O) data between the Plant Control System (PCS) and the field devices. It shall be used in conjunction with schematic diagrams for determining the cabling and various component requirements for the work specified in the I&C specification sections of this Division.

B. The PICS Sub-contractor shall supply, install, label, and terminate all cabling and wiring between all field devices (instruments, final control elements), various electrical equipment, process equipment supplied under other Divisions, process equipment supplied under other Contracts, and marshalling panel(s) as shown on the Drawings.

C. The PICS Sub-contractor shall provide control panels and all components (power supply, power conditioners, loop isolators, loop surge protectors, terminals, etc.) inside the control panels as shown on the instrumentation and control panel schematic and layout Drawings.

1.2 REFERENCES

A. The following general references apply to this section:
1. P&ID Drawings.
2. Section 406115, PICS SCOPE OF WORK-WWTP.
3. Section 406116, PICS ENCLOSURES-WWTP.
4. Section 406127, PICS INDUSTRIAL ETHERNET NETWORK-WWTP.
5. Section 406128, PICS MISCELLANEOUS EQUIPMENT-WWTP.
6. Section 406171, PICS INSTRUMENT SPECIFICATIONS-WWTP.

1.3 GENERAL REQUIREMENTS

A. Also see the GENERAL CONDITIONS, Division 01, GENERAL REQUIREMENTS, and Section 406110, PROCESS INSTRUMENTATION AND CONTROLS SYSTEM (PICS) GENERAL REQUIREMENTS-WWTP which contain information and requirements that apply to the work specified herein and are mandatory for this project.

B. Like items of equipment or materials provided hereunder shall be the end products of one manufacturer to achieve standardization for appearance, maintenance, and replacement, and shall include all necessary appurtenances for a complete and working system. The equipment or materials shall be the product of a manufacturer regularly engaged in the production of equipment or materials for the specified use. The manufacturer shall have the sole responsibility for the proper functioning and coordination of the equipment or materials as furnished.

C. The Contractor or the PICS Sub-contractor shall provide all required miscellaneous equipment and materials, as shown on the Drawings and in accordance with these Specifications. The Contractor or the PICS Sub-contractor shall furnish all equipment and material items, whether specified or not, as necessary to provide a complete, operable instrumentation and control (I&C) system.

1.4 PLC I/O INDEX

A. There are two groups of I/O points:
   1. Conventional (hardwired) I/O points – described in this section.
   2. Bus based I/O points (Ethernet/IP).

B. The typical wiring, conduit, and component requirements for the conventional (hardwired) I/O points are shown on a typical loop schematic Drawing. The PICS Sub-contractor shall observe the Drawings to identify the correct number of I/O and instrument power supply requirement from each instrumentation loop. For several instruments using a multicore instrument cable, the PICS Sub-contractor can then estimate the number of wires which require routing to the respective instrumentation and electrical field devices.

C. All PLC I/O card inputs and outputs and embedded PLC I/O's inputs and outputs installed in the local control panels shall be terminated to the dedicated terminals as indicated on Instrument Standard Details for the cards. It is not allowed to have an I/O card installed in the control panels without termination. The CompactLogix embedded I/Os shall be wired as follows:
   1. Digital Inputs: All digital inputs shall be wired to the associated terminals.
   2. Digital Outputs: Unless specifically noted otherwise, only the first four digital outputs shall be wired to the PLC interposing relays.
   3. Analog Inputs: Unless specifically noted otherwise, only two analog inputs shall be wired to analog loop isolators.
   4. Analog Outputs: Analog outputs do not need to be wired to dedicated terminals.
   5. High Speed Counters: High speed counters do not need to be wired to dedicated terminals.

D. The following lists and tables are examples only and shall serve as a template for the index the PICS contractor is to submit. Part numbers and descriptions are not necessarily applicable to this project. Separate lists shall be provided for the Hospital WWTP and the Hon-Dah WWTP:

CTU-1000: LOCATED IN THE ELECTRICAL ROOM OF THE HOSPITAL WWTP

Typical PLC Components			
Part Number	Description	Quantity	Remarks
Allen Bradley 1756-PA75	PLC Power Supply	1	
Allen Bradley 1756-A17	17 Slot Rack	1	
Allen Bradley 1756-L81E	CPU	1	c/w memory card
Allen Bradley 1756-EN2TR	Ethernet Bridge	TBD	
Allen Bradley 1756-IA16I	Digital Input Card (120 VAC)	TBD	c/w terminal blocks
Allen Bradley 1756-IB16I	Digital Input Card (24 VDC)	TBD	c/w terminal blocks
Allen Bradley 1756-OX8I	Relay Output Card	TBD	c/w terminal blocks
Allen Bradley 1756-IF8I	Analog Input Card	TBD	c/w terminal blocks
Allen Bradley 1756-OF8I	Analog Output Card	TBD	c/w terminal blocks

Prosoft MVI56E-MNETR	Modbus TCP Client/Server	TBD	If Required
Allen Bradley 1756-N2	Slot filter modules	TBD	

Rack #1 Layout: By Contractor (Rack Shown is an example)

	0	1	2	3	4	5	6	7	8	9	10	11	12	13	14	15	16
POWER SUPPLY	CPU[6]	ETHERNET BRIDGE	DIGITAL INPUT MODULE (DC)	DIGITAL OUTPUT MODULE	ANALOG INPUT MODULE	ANALOG OUTPUT MODULE	1756-N2	1756-N2	1756-N2	1756-N2	1756-N2	1756-N2	1756-N2	1756-N2	1756-N2	1756-N2	Prosoft

	P&ID DESIGNATION	TYPE: DIGITAL INPUT Hardware Designation: _____ (Example: ControlLogix 1756-IB16I)
	TAG	**DESCRIPTION**
DI-1		
DI-2		
DI-3		
DI-4		
DI-5		
DI-6		
DI-7		
DI-8		
DI-9		
DI-10		
DI-11		
DI-12		
DI-13		
DI-14		
DI-15		
DI-16		

	P&ID DESIGNATION	TYPE: DIGITAL INPUT Hardware Designation: _____
DI-1		
DI-2		
DI-3		
DI-4		
DI-5		
DI-6		
DI-7		
DI-8		
DI-9		
DI-10		
DI-11		
DI-12		
DI-13		
DI-14		
DI-15		
DI-16		

	P&ID DESIGNATION	TYPE: RELAY OUTPUT Hardware Designation: _____
	TAG	DESCRIPTION
DO-1		
DO-2		
DO-3		
DO-4		
DO-5		
DO-6		
DO-7		
DO-8		

	P&ID DESIGNATION	TYPE: ANALOG INPUT Hardware Designation: _____
	TAG	DESCRIPTION
AI-1		
AI-2		
AI-3		
AI-4		
AI-5		
AI-6		
AI-7		
AI-8		

	P&ID DESIGNATION	TYPE: ANALOG OUTPUT Hardware Designation: _____
	TAG	DESCRIPTION
AI-1		
AI-2		
AI-3		
AI-4		
AI-5		
AI-6		
AI-7		
AI-8		

PART 2 - PRODUCTS

2.1 GENERAL

A. Products shall be as summarized hereinbefore.

PART 3 - EXECUTION

3.1 GENERAL

A. Each analog PLC input and output point as determined by the PIC subcontractor, including 20% spares based on that determination, shall be connected to a dedicated loop isolator installed in the panel. Provide sufficient number of analog I/O loop isolators.

B. Unless otherwise specifically noted, each digital PLC input and output point, including all spares, shall be terminated to the dedicated terminals. All wires inside control panels shall be labeled. Provide all required fuses and size as required by the connected load.

C. All spare wires coming from the field wiring side shall be terminated to the dedicated terminals for digital inputs and outputs, and terminals or loop isolators or loop surge protectors, for analog inputs and outputs.

END OF SECTION

SECTION 406171 – INSTRUMENT SPECIFICATIONS – WWTP

PART 1 - GENERAL

1.1 WORK INCLUDED

A. This section covers furnishing and installing Process Instrumentation and Control Systems (PICS) instruments on this project, complete. All equipment, products, and execution must meet all requirements detailed in this Specification.

1.2 GENERAL REQUIREMENTS

A. Also see the GENERAL CONDITIONS, Division 01, GENERAL REQUIREMENTS, and Section 406110, PROCESS INSTRUMENTATION AND CONTROLS SYSTEM (PICS) GENERAL REQUIREMENTS - WWTP which contain information and requirements that apply to the work specified herein and are mandatory for this project.

B. Like items of equipment or materials provided hereunder shall be the end products of one manufacturer to achieve standardization for appearance, maintenance, and replacement, and shall include all necessary appurtenances for a complete and working system. The equipment or materials shall be the product of a manufacturer regularly engaged in the production of equipment or materials for the specified use. The manufacturer shall have the sole responsibility for the proper functioning and coordination of the equipment or materials as furnished.

C. The Contractor or the PICS Sub-contractor shall provide all required miscellaneous equipment and materials, as shown on the Drawings and in accordance with these Specifications. The Contractor or the PICS Sub-contractor shall furnish all equipment and material items, whether specified or not, as necessary to provide a complete, operable instrumentation and control (I&C) system.

D. All equipment shall be compliant with Federal Acquisition Register the clause 52.225-11, Buy American-Construction Materials under Trade Agreements (Nov 2023) and provision 52.225-12, Notice of Buy American Requirement-Construction Materials under Trade Agreements (May 2014).

1.3 SUBMITTALS

A. Submittals shall be provided as specified in Section 013300, SUBMITTAL PROCEDURES and Section 406110, PROCESS INSTRUMENTATION AND CONTROL SYSTEMS (PICS) GENERAL REQUIREMENTS - WWTP.

B. Submit product descriptive data for each type of I&C instrument used on this project.

PART 2 - PRODUCTS

2.1 INSTRUMENT AND COMPONENT SPECIFICATIONS

A. Where a list of devices is not shown for an instrument specification, the specification is considered generic for all instruments of that type.

B. All instruments of the same type specified below shall be from a single source. The design has been based on the first named manufacturer or supplier.

C. A component calibration table is provided at the end of this section.

D. F1 – ELECTROMAGNETIC FLOW METER:

1. Tags Hospital WWTP: FE/FT-1100-01, FE/FT-1220-01, FE/FT-1220-02, FE/FT1220-03, FE/FIT-1810-01, FE/FT-1920-01, FE/FT-1920-02, FE/FT-1930-01, FE/FIT-1730-01
2. Tags Hon-Dah WWTP: FE/FT-2100-01, FE/FT-2220-01, FE/FT-2220-02, FE/FIT-2810-01, FE/FT-2920-01, FE/FT-2920-02, FE/FIT-2730-01, FE/FIT-2940-01.
3. Flow Element
   a. NEMA Rating: Waterproof, NEMA 6P (IP65 minimum) rated, including the cable connection
   b. Nominal Diameter as per Drawings and Table 13705-1
   c. Lining: to be compatible with process fluid (raw sewage)
   d. Accuracy: 0.2% with 3 to 10 straight pipe diameters upstream; 1% with 0 straight pipe diameters upstream
   e. Electrodes: Stainless Steel
   f. Electrode grounding: Integral grounding electrode(s)
   g. Manufacturer's original power and signal cables supplied with flow element. Length as shown on Drawings.
   h. Grounding rings, flanges and lugs as required
   i. Operating pressure: 150 psi
4. Flow Transmitter
   a. Power Supply: 120VAC
   b. Analog Output: 4-20mA DC
   c. Totalizer Digital Output (Pulsed, Rate programmable)
   d. Bi-directional flow metering capability
   e. NEMA Rating: NEMA 4X
   f. Field mount enclosure (see Drawings). For remote mount transmitter, verify distance from element to transmitter and supply cables.
   g. Two-line digital display
5. Manufacturer: Badger, ABB, Endress & Hauser, or approved equivalent.

E. F2 – THERMAL MASS AIR FLOWMETER
1. Tags Hospital WWTP: FE/FIT-1720-01, FE/FIT-1720-02, FE/FIT-1720-03, FE/FIT-1720-04, FE/FIT-1720-05
2. Tags Hon-Dah WWTP: FE/FIT-2720 -01, FE/FIT-2720 -02, FE/FIT-2720-05,
3. Materials for sensor wetted surfaces based on service:
   a. Air: 316L series stainless steel.
4. Design and fabrication:
   a. Sensor assembly of 300 series stainless steel thermowells with precisely matched RTDs and a heating element.
   b. Turndown ratio: 3:1 to 100:1, compatible with flow ranges listed in the schedule below.
   c. Accuracy: +2 percent of reading down to +0.5 percent of full scale.
   d. Repeatability: +0.5 percent of reading.

e. Operating temperature:
   1. Sensor: -40-350 DegF.
   2. Transmitter: 0-150 DegF.
f. Process connection: 1 ¼ IN NPT.
g. Process pressure: 0-30 psig.
h. Field adjustable insertion length.
i. Microprocessor based electronics with field adjustable instrument performance parameters and build-in testing and diagnostics and nonvolatile memory.
j. Provide digital LCD display at transmitter. Includes IR communication link.
k. Transmitter shall be integrally mounted to the sensor, unless shown otherwise.
l. Output signal: 4-20 mA DC into 600 Ohms maximum.
m. 115 Vac, 60 Hz power.
n. Provide with suitable length of cable between sensor and transmitter.
o. Power and signal cables to transmitter shall be connected through Turck connectors and patch cable.
p. Supply one (1) programmer to allow reconfiguration of process parameters, if required.
q. Provide N.I.S.T. traceable calibration certificate for each flow meter.

5. Provide packing gland to allow removal while in use.
6. Acceptable manufacturers: Fluid Components, Inc., Model ST50, Endress & Hauser, or approved equal.

F. L1 – LEVEL SWITCH, FLOAT TYPE WITH INTEGRAL SWITCH

1. Tags Hospital WWTP: LSL-1140-01, LSH-1140-01, LSL-1210-01, LSH-1210-01, LS-1611-01, LS-1611-02, LS-1611-03, LSL-1920-01, LSH-1930-01, LSL-1930-01
2. Tags Hon-Dah WWTP: LSL-2140-01, LSH-2140-01, LSL-2210-01, LSH-2210-01, LS-2611-01, LS-2611-02, LS-2611-03, LSL-2920-01, LSH-2930-01, LSL-2930-01
3. Units shall be direct-acting float type consisting of a switch enclosed in a float, and connected to a two-conductor, combination support and signal cable. The entire assembly shall form a completely watertight- and impact-resistant unit. Floats shall be of chemical-resistant polypropylene material or other corrosion-resistant material suitable for use in raw sewage applications. Cable shall be rugged and flexible with heavy neoprene or PVC jacket. The actuation/de-actuation differential shall not exceed 1 inch. Units shall be pipe mounted as noted or shown. Provide with cable of sufficient length for installation as shown on the Drawings. Each pipe mounted type shall be provided with clamps to secure the cable to 1-inch support pipe.
4. Each suspended type shall be provided with necessary brackets and clamps to suspend the unit from the top of a tank or vessel. The suspended type shall include an integral or attached weight assembly for stabilization and positive operation of the unit. All mounting clamps shall be PVC or neoprene or stainless steel.
5. Float switches shall be a Teflon coated body permanently sealed and connected to Type SOW, PVC jacketed cable with (4-#18) fine stranded conductors for heavy flexing underwater service.

6. Switch shall contain no mercury, and be rated for 4 amps minimum at 240VAC, rolling ball actuated for consistent performance around the float body centerline, SPDT, with an estimated mechanical life of 10 million operations.
7. Units shall be Consolidated Electric #9GEF, Anchor Scientific, or approved equal.

G. L2 – RADAR LEVEL SENSOR
1. Tags Hospital WWTP: LE/LIT-1140-01, LE/LIT-1210-01, LE/LIT-1610-01, LE/LIT-1610-02, LE/LIT-1610-03, LE/LIT-1700-01, LE/LIT-1700-02, LE/LIT-1700-03, LE/LIT-1700-04, LE/LIT-1920-01
2. Tags Hon-Dah WWTP: LE/LIT-2140-01, LE/LIT-2210-01, LE/LIT-2610-01, LE/LIT-2610-02, LE/LIT-2610-03, LE/LIT-2700-01, LE/LIT-2700-02, LE/LIT-2920-01.
3. Sensor Specifications:
   a. Type: non-contact radar level measurement
   b. Field mounted (see Drawings) radar level transmitter
   c. Accuracy: 2 mm
   d. Analog output: 4-20Ma (directly to panel as shown on Drawings
   e. Cable Type: 2 Wire
   f. Beam Angle: 8-deg
   g. Process fitting: 1.5-inch NPT (coordinate with mounting location requirements)
   h. Environment: compatible with vapors from aggressive chemicals.
   i. Wetted parts: PVFD
   j. Process seal: EPDM
   k. Type: VEGAPULS C21 or approved equal
4. Indicator:
   a. Housing: Plastic, NEMA 4X, IP66
   b. Display: LCD in dot matrix; four adjustment keys
   c. Power Supply: 3.2V wired into signal line
   d. Ambient Conditions:
   e. Cable Entry: ½” NPT
5. Manufacturer: VegaPlus C21 with VegaDis, Endress & Hauser, or approved equal.

H. LP1 LEVEL/PRESSURE TRANSDUCER
1. Tags Hospital WWTP: LE/LIT-1930-01
2. Tags Hon-Dah WWTP: LE/LIT-2930-01
3. Level and Pressure Indicator and Transmitter
   a. NEMA Rating: Waterproof, NEMA 6 (IP65 minimum) rated and NEMA12 (IP67 minimum) where indicated as submersible in I/O Tables
   b. 7.25” Length, 1.55” Diameter
   c. Housing type: ¼” NPT, PVC
   d. Sensor and Diaphragm: 316L SS
   e. Accuracy: 0.1%
   f. Temp Range: -20 to 60 C
   g. Submerged Application: SS snub nose adapter

h. Manufacturer's original power and signal cables supplied with flow element. Required length by drawings
i. Power Supply: 10.5-24VDC
j. Analog Output: 4-20mA DC

4. Acceptable Type and Manufacturer: MicroComm L5A, Endress & Hauser, or approved equal.

I. P1 PRESSURE SENSOR/TRANSMITTER

1. Tags Hospital WWTP: PE/PIT-1920-01
2. Tags Hon-Dah WWTP: PE/PIT-2920-01
3. Pressure sensor/transmitter shall be ABB, Siemens, or approved equal.
4. The pressure sensor/transmitter shall have the following characteristics:
   a. Body material: Plated carbon steel
   b. Wetted parts material: Hastelloy
   c. Over pressure protection: Standard
   d. Accuracy: +/-1.0% full scale with hysteresis and repeatability of no greater than 0.1% full scale
   e. Output: 4-20 mA
   f. Input: Keypad
   g. Display: One line LCD type
   h. Power supply: 24VDC loop powered
   i. i. Enclosure: NEMA 4X, cast aluminum or stainless steel
   j. j. Cable length: 75 ft

J. P2 PRESSURE SWITCH

1. Tags Hospital WWTP: PSH-1220-01, PSH-1220-02, PSH-1220-03, PSH-1730-01), PSH-1730-02
2. Tags Hon-Dah WWTP: PSH-2220-01, PSH-2220-02, PSH-2730-01, PSH-2730-02.
3. The pressure switch shall have the following characteristics:
   a. Type: SPDT, Teflon activator with internal adjustment
   b. Connection size: ¼"
   c. Over pressure protection: Standard
   d. Enclosure: NEMA 4X
   e. Power supply: 120 VAC
4. Manufacturers: Ashcroft or approved equal.

K. P3 PRESSURE GAUGE

1. Tags Hospital WWTP: PI-1140-01, PI-1140-02, PI-1140-03, PI-1210-01, PI-1220-01, PI-1220-02, PI-1220-03, PI-1730-01
2. Tags Hon-Dah WWTP: PI-2140-01, PI-2140-02, PI-2140-03, PI-2210-01, PI-2220-01, PI-2220-02, PI-2730-01, PI-2940-01, PI-2940-02
3. The pressure gauge shall have the following characteristics:
   a. Type: Phosphor bronze bourdon tube, liquid filled with FDA approved silicon oil unless otherwise noted.
   b. Case: Black aluminum

c. Dial: be 4½-inch dial size for pipe sizes 2-inches and greater, and 2½-inch for pipe sizes 1½-inches and less with white face and black letters, glass lens.
d. Connection: 1/2” with NPT stem
e. Wetted parts: Type 316 SST
f. Accuracy: 1% full scale
g. Range as listed in the Component Calibration Table
h. Working pressure: Maximum 75% of full scale

4. Manufacturers: Ashcroft Duragauge series 1279/1379; Ametek Solfrunt series 1900; or approved equal

L. P4 PRESSURE SEAL, DIAPHRAGM

1. Tags Hospital WWTP: PE-1140-01, PE-1140-02, PE-1140-03, PE-1210-01, PE-1220-01, PE-1220-02, PE-1220-03, PE-1730-02.
2. Tags Hon-Dah WWTP: PE-2140-01, PE-2140-02, PE-2140-03, PE-2210-01, PE-2220-01, PE-2220-02, PE-2730-02.
3. The pressure seal shall have the following characteristics:
   a. Units shall consist of corrosion resistant lower housing and diaphragm, and instrument mounting upper housing.
   b. Lower housing shall have 1 inch NPT process connection and a flushing connection. Housing shall be 316 stainless steel unless otherwise noted.
   c. Diaphragm shall be 316 stainless steel unless otherwise noted.
   d. Upper housing shall have bleed screw and ½ inch NPT instrument connection, and shall be 316 stainless steel unless noted otherwise.
   e. Filling fluid shall be as noted.
   f. Where noted, capillary assembly shall be furnished to connect diaphragm seal to instrument with length as noted.
   g. Wherever practical, pressure seal shall be factory filled and assembled to the primary element (i.e., pressure gauge, pressure switch, transmitter, etc.).
4. Manufacturers: Ametek, Mansfield and Green Division Type SG; Ashcroft Type 101; or equal.

M. P5 PRESSURE SWITCHES WITH ANNULAR SEAL

1. Tags Hospital WWTP: PE-1730-01.
2. Tags Hon-Dah WWTP: PE-2730-01.
   a. The annular pressure transducer seal shall have the following characteristics:
   b. Housing: Polyurethane enamel coated steel with ¼” NPT connection
   c. Flanges: Class 150
   d. Diaphragm: Sleeve style, EPDM
   e. Instrument: As per P2 specified herein.
3. Manufacturer: Noshok or approved equal.

N. A1 DISSOLVED OXYGEN PROBE AND CONTROLLER

1. Tags Hospital WWTP: AE/AIT-1210-01
2. Tags Hon-Dah WWTP: AE/AIT-2210-01

3. The DO probe and controller shall have the following characteristics:
   a. Probe type: Luminescent sensor technology
   b. Probe accuracy: Plus-minus 0.1 mg/L or 1% saturation
   c. Temperature compensation: Integral to sensor
   d. Probe cleaning: Manual
   e. Probe mounting: Handrail – provide mounting kit
   f. Controller units: mg/L
   g. Controller display: Touchscreen
   h. Controller keypad: Membrane
   i. Controller enclosure: NEMA 4X
   j. Communication output: Analog and Profibus
   k. Controller mounting: Wall – provide mounting kit
   l. Area classification: None
   m. Power requirements:120V
   n. Approvals: UL
4. Manufacturers shall be Endress & Hauser, Hach, YSI, or approved equal.

O. T1 TEMPERATURE SENSOR
1. Tags Hospital WWTP: TIT-1920-01
2. Tags Hon-Dah WWTP: TIT-2920-01
3. The temperature sensor shall have the following characteristics:
   a. Input: Platinum RTD, 100Ω @ 0°C.
   b. Output Signal: 4-20 mA DC.
   c. Power Requirements: 12-35 volts DC.
   d. Accuracy: Standard accuracy.
   e. Thermal Drift: 0.00385 Ohms/Ohm/°C.
   f. Probe Construction: 3" long, 0.25" O.D. Type 304 Stainless Steel.
   g. Temperature Range: -40F – 140F
   h. Lead Configuration: 3 wire.
   i. Transmitter: Mounted inside connection head.
   j. Sheath: Stainless steel
   k. Connection Head: Rated for location installed.
   l. National Basic Sensor 10C- series or equal.

P. PORTABLE DISSOLVED OXYGEN METER
1. Provide one portable DO probe and hand-held meter for measuring dissolved oxygen in the treatment basins for each WWTP. Portable probe shall not require reagents or consumables and shall be of rugged construction for field use. Portable probe and meter shall be Hach HQ30D Portable Dissolved Oxygen Meter with Field Luminescent DO Sensor, 5 meter cable, YSI ProSolo ODO Optical Dissolved Oxygen Meter, or approved equal.

Q. PORTABLE UV254 MONITOR
1. Provide one Chemtrac UVT1000, Real Tech UV245 Field meter, or approved equal for each WWTP.
2. Provide a total of three quartz cuvettes per unit.

R. CHLORINE ANALYZER
1. Tags Hospital WWTP: AE/AT-1930-01
2. Tags Hon-Dah WWTP: AE/AT-2930-01
3. The chlorine analyzer shall have the following characteristics:
   a. Type: Reagent-less, amperometric for continuous measurement of free chlorine. Sensor will be submerged in the reuse water tank.
   b. Sensor Input Power: 24 VDC @100 mA.
   c. Sensor Dimensions: 8” long, 1.75” O.D.
   d. Display Input Power: 24 VDC @ 200 mA or 120 VAC
   e. Display Outputs: 4 x 4-20 mA
   f. Temperature Range: 33F – 113F
   g. Flow/Velocity: 0 to 13 feet/second
   h. Provide stainless immersion mount with carabiner for chain style mounting
4. Manufacturer: Halogen Systems, Inc. MP5A with D20 Display/Controller

S. ALARM ANNUNCIATOR AND BEACON
1. Annunciator/beacon shall be energized when a float switch is energized to indicate a high tank or sump level.
2. The annunciator beacon shall include an integrated or separately mounted acknowledge button to silence the alarm and turn off the beacon.
3. Beacon shall be flashing red light.
4. Annunciator shall be >100 decible electric horn.
5. Enclosures shall be NEMA 4X.

2.2 COMPONENT CALIBRATION TABLE

COMPONENT CALIBRATION TABLE			
TAG NUMBER Hospital WWTP / Hon-Dah WWTP	**FUNCTION**	**CODE**	**OPTIONS, CALIBRATION INFO, SCALE RANGE, SET POINTS**
Influent Flow Meter and Influent Pump Station			
FE/FIT-1100- 01 / FE/FIT-2100- 01	Electromagnetic Flow Meter		0-600 gpm
LE/LIT-1140-01 / LE/LIT-2140- 01	Radar Level Sensor		1-10 ft from sensor
LSL-1140- 01 / LSL-2140-01	Low Level Float Switch		
LSH-1140- 01 / LSH-2140-01	High Level Float Switch		
PE/PI-1140- 01,02,03 / PE/PI- 2140- 01,02,03	Pump Discharge Diaphragm Seal and Pressure Gauge		0-30 psi
EQ Basin			

LE/LIT-1210- 01 / LE/LIT-2210-01	Radar Level Sensor		1-17 ft from sensor
LSL-1210-01 / LSL-2210-01	Low Level Float Switch		
LSH-1210 01 / LSH-2210-01	High Level Float Switch		
AE/AIT-1210-01 / AE/AIT-2210-01	Dissolved Oxygen Probe		0-8 mg/L
PE/PI-1210-01 / PE/PI-2210-01	Suction header Diaphragm seal and pressure indicator		-10 - 30psi
FE/FIT-1720-05 / FE/FIT-2720-05	EQ Basin Air Flow Meter		0-300 scfm
EQ Pump Station			
PE/PI-1220- 01,02,03 / PE/PI-2220- 01,02,03	Pump Diaphragm Seal and Pressure Indicator		0-30 psi
PSH-1220- 01,02,03 / PSH-2220- 01,02,03	Pump Pressure Switch High		25 psi
FE/FIT-1220-01,02,03 / FE/FIT-2220-01,02,03	Pump Electromagnetic Flow Meter/ Transmitter		0-400 gpm
NPW System			
PI-1810-01 / PI-2810-01	Pressure Gauge (Headworks Room)		0-130 psi
PI-1810-02 / PI-2810-02	Pressure Gauge (Chem Feed Room)		0-130 psi
PI-1810-03 / PI-2810-03	Pressure Gauge (Process Room)		0-130 psi
PI-1730-01 / PI-2730-01	Pressure Gauge (Solids Handling Room)		0-130 psi
Reclaimed Effluent Pumping System			
LE/LIT-1920-01 / LE/LIT-2920-01	Effluent Tank Level/Radar Sensor		1-6 ft from sensor
TIT-1920-01 / YIY-2920-01	Effluent Temperature Sensor		0-30°C
FE/FIT-1920-01 / FE/FIT-2920-01	Reclaimed Effluent Flow Meter		0-300 gm

FE/FIT-1920-02 / FE/FIT-2920-02	Plant Effluent Flow Meter		0-300 gpm
AE/AIT-1930-01 / AE/AIT-2930-01	Residual Chlorine Meter		0-5 mg/L total residual chlorine
LE/LIT-1930-01 / LE/LIT-2930-01	Reclaimed Water Tank Level/Pressure Transducer		26 ft max depth
FE/FT-1930-01 / FE/FT-2930-01	Reclaim Tank Discharge Flow Meter		0-300 gpm
Chemical Room			
LE/LIT-1610-01 / LE/LIT-2610-01	Alum Tank Radar Level Sensor		1-7 ft from sensor
LE/LIT-1610-02 / LE/LIT-2610-02	MicroC Tank Radar Level Sensor		1-7 ft from sensor
LE/LIT-1610-03 / LE/LIT-2610-03	Caustic Tank Radar Level Sensor		1-7 ft from sensor
LAH-1610-01A / LAH-2610-01A	Common Tank High Level Alarm Beacon/Annunciator		Mount in Chemical Room, near tank fill connections, operator accessible
LS-1611-01 / LS-2611-01	Alum Secondary Containment Level Switch		Mount as close to floor as possible
LS-1611-02 / LS-2611-02	MicroC Secondary Containment Level Switch		Mount as close to floor as possible
LS-1611-03 / LS-2611-03	Caustic Secondary Containment Level Switch		Mount as close to floor as possible
LA-1611-01A / LH-2611-01A	Common Secondary Containment Level Alarm Beacon/Annunciator		Mount in Chemical Room, operator accessible
Digester Blowers			
FE/FIT-1720-01, 02,03,04 / FE/FIT-2720-FE/FIT-1,02	Digester Air Flow Meter		0-300 scfm
PI/PIT-1720-01 / PI/PIT-2720-01	Discharge Air Pressure Gauge		0-15 psi
Digesters and Dewatering System			

LE/LIT-1700-01,02,03,04 / LE/LIT-2700-01,02	Digester Radar Level Sensor and Transmitter		2-17 ft from sensor
PE/PSH-1730-01,02 / PE/PSH-2730-01,02	Sludge Pump Pressure Switch, Annular Seal		0-30 psi
PI-1730-01 / PI-2730-01	Polymer Feed NPW Pressure Gauge		0-130 psi
FE/FIT-1730-01 / FE/FIT-2730-01	Digested Sludge Flow Meter		0-100 gpm

PART 3 - EXECUTION – NOT USED

END OF SECTION

SECTION 406176 – PLANT CONTROL SYSTEM (PCS) SOFTWARE REQUIREMENTS – WWTP

PART 1 - GENERAL

1.1 WORK INCLUDED

A. This Section provides requirements for the system performance and guidelines to the structure and programming of the Human-Machine Interface / Supervisory Control and Data Acquisition (HMI/SCADA) system, also referred in the Division 40, PROCESS INTERCONNECTIONS-WWTP Specifications as the PCS (Plant Control System) software, and of the Rockwell Automation ControlLogix PLC programs, and the Rockwell Software FactoryTalk ViewSE application (or approved equal) for the wastewater treatment plant.

B. The Contractor and/or PICS Sub-contractor shall furnish all equipment and engineering to accomplish the functional and technical requirements of this Specification including, but not limited to, project coordination, equipment supply, shipment, storage, jobsite delivery, installation and setup, installation supervision, training, calibration, testing, startup, and maintenance, all in accordance with the requirements of these Contract Documents. The PCS application programming and development (PLC and HMI) and control system configuration shall be done by the Contractor's and/or PICS Sub-contractor's selected System Integrator (PCS System Integrator) and shall be included in the Contractor's and/or PICS Sub-contractor's scope of work.

C. It is the responsibility of the PCS system integrator to coordinate commissioning work, PLC/HMI programming and system integration work with package equipment suppliers and to provide the required communication datamaps.

D. The Contractor and/or PICS Sub-contractor shall complete HMI development workshops with the Owner and Engineer to finalize screen graphics. At a minimum, provide 20 hours of workshop time for each WWTP.

1.2 GENERAL

A. Also see the GENERAL CONDITIONS and Division 01 GENERAL REQUIREMENTS, which contain information and requirements that apply to the work specified herein and are mandatory for this project.

B. Process instrumentation and controls software for this project shall include all items, articles, materials and the associated labor mentioned, scheduled or shown in these specifications and in the accompanying Drawings.

C. Furnish and install all equipment, materials and any required incidental items required by good practice to complete the systems described on the Drawings or in the project specifications.

1.3 RELATED WORK

A. Related work specified or shown elsewhere includes, but is not necessarily limited to, the following:
   1. Section 406115, PROCESS INSTRUMENTATION AND CONTROL SCOPE OF WORK-WWTP.
   2. Requirements for the System Software development are listed in Section 406120, PROCESS CONTROL NARRATIVES-WWTP.
   3. Section 406160, PLC I/O LIST-WWTP.
   4. Section 406127, PICS INDUSTRIAL ETHERNET NETWORK-WWTP.

5. P&ID Drawings.
6. Division 40, PROCESS INTERCONNECTIONS-WWTP.
7. Division 43, PROCESS GAS AND LIQUID HANDLING-WWTP.
8. Division 46, WATER AND WASTEWATER TREATMENT EQUIPMENT-WWTP.
9. Division 26, ELECTRICAL-WWTP.

PART 2 - PRODUCTS

2.1 SERVICE REQUIREMENTS

A. General: The service of competent field technicians of the PICS Sub-contractor shall be provided. The field technicians shall be trained by the equipment manufacturers in regard to the configuration, programming, calibration, start-up, operation, loop tuning and software maintenance of each component of the PCS system provided for the Project.

B. Support Service: The PICS Sub-contractor shall provide all necessary assistance to instruct the Owner's representatives and PCS System Integrator in the operation of the equipment and application supplied. This assistance shall be provided during the commissioning and start-up phase of the project and the first year of the facility operation following project completion and Owner acceptance. Allow for a minimum of 20 hours of assistance after the commissioning is finalized until the end of the warranty period.

PART 3 - SERVICE PERFORMANCE

3.1 SYSTEM PERFORMANCE

A. Coordinate with the Process Control Narratives (PCN), Process and Instrumentation Drawings and other Drawings and Specifications. Any requirement shown either in this document, or in the PCNs, PCS I/O, and all other I&C Drawings and Specifications must be implemented in the PCS applications.

B. The PCS application shall be developed to meet but not be limited to the following criteria:
   1. The HMI screens plant PCS application Rockwell Software FactoryTalk ViewSE shall include, but not be limited to, the following:
      a. Main System Screen – Displays major important plant parameters and most important parameters from all remote sites with geographical map background.
      b. Main Plant Screen – Displays most important plant parameters, including influent flow, reclaimed water flow, plant effluent flow, and reclaimed water tank discharge flow.
      c. Sewer Lift Station Screen– Displays influent pump station parameters. Odor control system also shows on this screen.
      d. Headworks Room Screen – Displays coarse screening, grit removal, fine screening, and influent pump station parameters.
      e. Equalization Basin and Pump Station Screen – Displays EQ Basin and EQ pump parameters.
      f. MBR Overview Screen – Displays an overall screen of the MBR system.
      g. MBR Individual Screens - Displays individual MBR train parameters as shown on the MBR system control panels, including chemical feed and chemical storage for the MBR system.

h. UV System Screen – Displays UV system parameters.
i. Aerobic Digesters Screen – Displays digester and digester blower parameters.
j. Sludge Pump Station – Displays sludge pumping parameters.
k. NPW and Reclaimed Effluent Pump Station Screen – Displays the NPW and reclaimed effluent pumping station parameters.
l. Reclaimed Water Tank and Chlorination Screen – Displays tank level, sodium hypochlorite feed pumps, and residual chlorine measurement.
m. Sludge Dewatering System Screen – Displays the dewatering system parameters.
n. Analytical Instruments Screen – Displays all plant analytical instruments in a single table on one screen.
o. Trends screens for all analog values – maximum number of trends per screen is six.
p. PLC and Communication Status Screen – Displays PLC run and fault status and communication status between the PLCs.
q. Utility Screen – Generator and ATS.
r. Alarm Log Screen – Displays all logged alarms for the operator adjustable logging period. Minimum period shall be one month.
s. Alarm Dialer Screen – Displays each dialer alarm. An Owner operator shall be able to enable/disable each of the dialer alarms.
t. Power Monitor Screen – displays all information from the power monitors (MCC-01)
u. Report Screen.
v. Reserved screens (quantity of 2) – Displays equipment and area parameters to be defined by operators for further detail if needed.

2. The screen for each system shall provide a means for drilling down into individual equipment parameters and access to all operator adjustable setpoints for that system.
3. In addition to tags and signals listed in the process control narratives and individual equipment specifications, plant PCS tags (HMI tags) shall include, but not be limited to, the following:

Equipment Type	Signal	Action
Electric Motors with Smart Overloads	Overload Fault	Displayed, logged, alarmed
	High Discharge Pressure Fault (if applicable)	Displayed, logged, alarmed
	High Torque Warning (if applicable)	Displayed, logged, alarmed
	High-High Torque Alarm (if applicable)	Displayed, logged, alarmed
	E-Stop Activated (If applicable)	Displayed, logged, alarmed
	Motion Sensor Alarm (if applicable)	Displayed, logged, alarmed
	Run	Displayed, logged
	Starter L-O-R switch in Remote	Displayed

Equipment Type	Signal	Action
	HMI H-O-A switch (Remote-Hand/Remote-Auto Selector) in Hand (PCS Command)	Displayed, start the motor
	HMI H-O-A switch (Remote-Hand/Remote-Auto Selector) in Off (PCS Command)	Displayed, motor stopped
	HMI H-O-A switch (Remote-Hand/Remote-Auto Selector) in Auto (PCS Screen Command)	Displayed, motor start/stop controlled by PCS
	Communication Fault	Displayed, logged, alarmed
	Motor Runtime Hours	Displayed, logged
	Motor Runtime Hours (PCS Screen Command)	Displayed
	Remote Fault Reset (PCS Screen Command)	Displayed
	Motor Current	Displayed, logged, trended
	Percentage of Overload	Displayed, logged, trended
Electric Motors with VFDs	VFD Fault	Displayed, logged, alarmed
	High Discharge Pressure Fault (if applicable)	Displayed, logged, alarmed
	High Torque Warning (if applicable)	Displayed, logged, alarmed
	High-High Torque Alarm (if applicable)	Displayed, logged, alarmed
	E-Stop Activated (If applicable)	Displayed, logged, alarmed
	Motion Sensor Alarm (if applicable)	Displayed, logged, alarmed
	Run	Displayed, logged
	VFD L-O-R switch in Remote	Displayed
	HMI H-O-A switch (Remote-Hand/Remote-Auto Selector) in Hand (PCS Command)	Displayed, start the motor
	HMI H-O-A switch (Remote-Hand/Remote-Auto Selector) in Off (PCS Command)	Displayed, motor stopped
	HMI H-O-A switch (Remote-Hand/Remote-Auto Selector) in Auto (PCS Screen Command)	Displayed, motor start/stop controlled by PCS
	Remote Fault Reset (PCS Screen Command)	Displayed
	Communication Fault	Displayed, logged, alarmed
	Motor Runtime Hours	Displayed, logged
	Motor Runtime Hours (PCS Screen Command	Displayed
	Motor Speed Setpoint in	Displayed

Equipment Type	Signal	Action
	Hand (PCS Screen Command	
	Motor Current	Displayed, logged, trended
	Motor Frequency Feedback	Displayed, logged, trended
Modulating Motorized Valves and Gates Actuators	Valve/Gate in Opened Position	Displayed
	Valve/Gate in Closed Position	Displayed
	Valve/Gate Open-Close-Remote switch in Remote	Displayed
	Valve/Gate Actuator General Fault	Displayed, logged, alarmed
	HMI H-O-A switch in Hand Position (PCS Command)	Displayed, open the valve as per HMI valve position setpoint
	HMI H-O-A switch in Open Position (PCS Command)	Displayed, close the valve
	HMI H-O-A switch in Auto (PCS Screen Command)	Displayed, valve controlled by PCS
	HMI Valve Position Setpoint in Hand (PCS Screen Command)	Displayed
	Position Command	Displayed, logged
	Position Indication	Displayed, logged, trended
Magnetic Flowmeters	Flow Indication	Displayed, logged, trended
	Totalized Flow	Displayed, logged
	Daily Totalized Flow	Displayed, logged
	Reset Totalized Flow – Command	Displayed
Radar Level Sensor, Pressure (Level) Transducer	Level Indication	Displayed, logged, trended
	Loss of 4-20mA signal	Displayed, logged, alarmed
	Transmitter Fault	Displayed, logged
	High-High Level Alarm	Displayed, logged, alarmed
	High Level Alarm	Displayed, logged, alarmed
	Low Level Alarm	Displayed, logged, alarmed
	Low-Low Level Alarm	Displayed, logged, alarmed
	High-High Level Alarm Setpoint	Displayed
	High Level Alarm Setpoint	Displayed
	Low Level Alarm Setpoint	Displayed
	Low-Low Level Alarm Setpoint	Displayed
	Level Setpoint c/w PID Faceplate	Display
Pressure Transmitter	Pressure Indication	Displayed, logged, trended
	Loss of 4-20mA signal	Displayed, logged, alarmed
	High-High Pressure Alarm	Displayed, logged, alarmed

Equipment Type	Signal	Action
	High Pressure Alarm	Displayed, logged, alarmed
	Low Pressure Alarm	Displayed, logged, alarmed
	Low-Low Pressure Alarm	Displayed, logged, alarmed
	High-High Pressure Alarm Setpoint	Displayed
	High Pressure Alarm Setpoint	Displayed
	Low Pressure Alarm Setpoint	Displayed
	Low-Low Pressure Alarm Setpoint	Displayed
	Pressure Setpoint c/w PID Faceplate	Display
Float Level Switch	Float Level Active	Displayed, logged, alarmed
Flow Switch	Pump running and no flow	Displayed, logged, alarmed, stop the pump
Dissolved Oxygen Meter	DO Indication	Displayed, logged, trended
	General Fault	Displayed, logged, alarmed
	High-High DO Alarm	Displayed, logged, alarmed
	High DO Alarm	Displayed, logged, alarmed
	Low DO Alarm	Displayed, logged, alarmed
	Low-Low DO Alarm	Displayed, logged, alarmed
	High-High DO Alarm Setpoint	Displayed
	High DO Alarm Setpoint	Displayed
	Low DO Alarm Setpoint	Displayed
	Low-Low DO Alarm Setpoint	Displayed
	DO Setpoint c/w PID Faceplate	Display
	Communication Fault (Profibus DP)	Displayed, logged, alarmed
Temperature Transmitter	Temperature Indication	Displayed, logged, trended
	Loss of 4-20mA signal	Displayed, logged, alarmed
Thermal Mass Air Flowmeter	Mass Flow	Displayed, logged, trended
	Totalized Flow	Displayed, logged
	Reset Totalized Flow – Command	Displayed
	High-High Flow Alarm	Displayed, logged, alarmed
	High Flow Alarm	Displayed, logged, alarmed
	Low Flow Alarm	Displayed, logged, alarmed
	Low-Low Flow Alarm	Displayed, logged, alarmed
	High-High Flow Alarm Setpoint	Displayed
	High Flow Alarm Setpoint	Displayed
	Low Flow Alarm Setpoint	Displayed
	Low-Low Flow Alarm Setpoint	Displayed
	Flow Setpoint c/w PID	Display

Equipment Type	Signal	Action
	Faceplate	
H2S and Methane (LEL) Gas Detectors	H2S	Display, logged, trended
	LEL	Display, logged, trended
	High Gas Alarm	Display, logged
	High –High Gas Alarm	Display, logged
	High Gas Alarm Setpoint	Setpoint
	High-High Gas Alarm Setpoint	Setpoint
	General Fault	Display, logged
Dosing Pump	Pulse Input	Displayed, logged
	Pump Fault	Displayed, logged, alarmed
	HMI H-O-A switch in Hand Position (PCS Command)	Displayed, start the pump, speed as per HMI setpoint
	HMI H-O-A switch in Off Position (PCS Command)	Displayed, stop the pump
	HMI H-O-A switch in Auto (PCS Screen Command)	Displayed, pump controlled by PCS
	HMI Speed Setpoint in Hand (PCS Screen Command)	Displayed
Power Monitors	Phase A Current	Display, logged
	Phase B Current	Display, logged
	Phase C Current	Display, logged
	Average Current	Display, logged, trended
	Phase A Voltage	Display, logged
	Phase B Voltage	Display, logged
	Phase C Voltage	Display, logged
	Average Voltage	Display, logged, trended
	Active Power	Display, logged, trended
	Reactive Power	Display, logged, trended
	Power Factor	Display, logged, trended
	Overvoltage	Display, logged, alarmed
	Undervoltage	Display, logged, alarmed
	Phase Loss	Display, logged, alarmed

4. Work to create the HMI tags above shall include PLC programming work to provide control logic for HMI tags. For example, a High-High Level Alarm shall include control logic which will compare the level value with the High-High Level Setpoint value and, if active, set a High-High Level Alarm. The logic shall include a timer as well to allow for alarm delays. Each runtime or flow HMI totalizer tag shall include the associated PLC logic, etc. The PLC logic shall include a PID controller for each level, flow, Dissolved Oxygen, temperature, or pressure variable.
5. The PCS system shall be developed to meet the specified performance requirements in line with the PLC input/output (I/O), P&IDs, and control system architecture Drawings. The PCS system shall be suitably sized to provide the specified performance criteria.

6. Data shall be logged and stored by the following methods:
   a. Time.
   b. Event.
   c. Significant Change.
7. Data storage shall be provided in the PCS system for:
   a. All events and alarms states.
   b. All measured analog values.
   c. The system integrator shall allow for minimum of 150 alarms.
8. Other than alarms described in these Specifications and Drawings, allow for programming of additional 100 alarms, 25 analog signals, and 200 digital signals. Include PLC programming, HMI programming with a display of values on screens, logging, and trending.
9. Provide a level 1 alarm for PLC communication failure for each PLC in the Plant Control System.
10. A dedicated trends screen (4, 8, 24, and 48 hours) shall be provided in the PCS system for:
    a. All measured analog inputs in each PLC.
    b. All VFD analog values (motor current and speed).
    c. All VFD, SSD, and smart-overload analog values (motor current and speed).
    d. Power Monitor Analog Values (allow for a minimum of 10 values).
11. Trends shall display the last four hours of the trended variables with push buttons to select 4, 8, 24 and 48 hours. Also, the operator shall be able to see up to one year of the historical data values for each trend.
12. Allow for continuous data exchange (read and write) between each CPU processor. Allow for minimum of 100 32-bit registers and 100 floating point registers in each direction between each PLC CPU.
13. Measured analog values shall be stored on significant change or at maximum intervals of one hour.
14. Changes in digital states shall be logged as they occur (i.e., as alarms or events). The maximum interval between logging digital states shall be one hour.
15. Short term archived stored data shall be held in the system for a minimum of seven days and shall be available at all times during this period for direct retrieval for the provision of reporting and trending.
16. All stored data shall be time and date stamped by the PCS system.
17. Archived and stored data shall be provided with easy access, sorting by group and plant area, for retrieval purposes. Groups shall be nominally as follows:
    a. Operational (plant status and alarms with provision for sorting by zones).
    b. Flow data.
    c. Analytical and consents information.

C. Data archiving shall be provided with filtering to enable recovery of archived data by plant area, date, and time periods, etc.

D. Data transfer between the PLC processors and the central PCS HMI system shall be bi-directional.

E. All numerical data entry into PCS applications shall be through a software numeric keypad. Pushbuttons only are not acceptable.

F. Each instrument, pump, and other equipment tag displayed on the PCS screen shall be shown with its respective tag number.

G. Report screen must include: Daily totalized flow for all flowmeters and runtime hours for all pumps, blowers, and mixers.

H. The data to be transferred shall be located in a single area of the PLC memory map with the data sorted into the following file structure:
   1. Digital signals to PCS (including derived signals) integer file.
   2. Analog signals to PCS (including derived signals) floating point file.
   3. Digital signals from PCS (control signals) integer file.
   4. Analog signals from PCS (set point values) floating point file.

I. Operator Access Security:
   1. Access to the system shall require a user password attached to a specific user named on the system. A Password User Table shall log all users registered to use the system. The Password User Table shall be accessible only to the System Engineer level of security. The Plant Manager shall only be able to amend the User Table for access levels below his level.
   2. The security system shall be an object based, hierarchical model. This model shall allow for the creation of Security Groups that contain assigned Application Objects. The model shall allow for the creation of Operator Roles that can be assigned to Security Groups. Operator Roles shall allow for the assignment of configuration database permissions, and for runtime operational permissions, and access to visualization of certain windows.

3.2 SCADA REQUIREMENTS

A. Requirements for Graphical Displays:
   1. Graphical displays shall provide the main access gate for the Owner's operator to interface with the plant processes and remote sites operation. The graphical displays shall be representative of the process and shall be developed from the Process and Instrumentation Diagrams (P&ID's).
   2. All graphical displays shall be installed on all PCS clients to provide "same look and feel" for operators.
   3. Graphical displays shall generally be of the following type:

Mimics	A mimic shall display a visual picture of the plant in a format which represents the plant components and measurements.
Tables	Tables shall display lists of information for plant systems, displaying the current value of each monitored item. This shall include all status digital signals and all analog signals associated with the system.
Trends	Trends shall provide analog data against a selectable time base. Trends shall be of two types: (a) On-line trend, building up current data on a cumulative real-time base. (b) Historical trend, displaying analog variables at defined intervals displayed over a selectable time base.
Schedules	Schedules shall be provided for the continuous logging and display of all alarms and events. As a minimum,

	each schedule shall list the item tag number; item description; date and time of action.
Control Windows	Control window displays shall be of a panel format with interactive switches and indicators providing display and control of all points associated with the device(s). The control windows shall be provided for each item of controllable plant or control loop. This display shall provide positive interaction between the operator and the plant for remote manual control of the plant item or changing set point parameters etc. It shall display all relevant measurable parameters associated with the control actions and shall provide control via a series of On screen buttons and acknowledge messages. For an instrument, the control window shall provide the facilities to display and enter calibration details and, where applicable, enter high and low alarm limits. For a PID loop, the control window shall provide the facilities to display and enter all PID parameters.
Alarm Annunciator Mimic	Plant area alarm annunciator mimic display for each plant area.

4. General and process specific help pages shall be provided to assist the user in screen navigation, PCS system operation, and to aid the operation and control of the plant. Help pages shall be configured in conjunction with the Engineer. Help pages may be presented as individual pages accessed from a mimic, or as a window superimposed on a mimic.
5. The graphic displays shall be uncluttered and clear, and provide the operator with all information necessary to control the plant in an unambiguous way.
6. The complete process shall be represented using a series of displays arranged in a hierarchical tree structure. At all times it shall be possible to move down to the next level, move up to the previous level, or return to the highest level. Within each hierarchical level it shall be possible to step forward or step backward to a related process display without returning to a higher level.
7. Navigation keys shall be provided in line with the hierarchical tree structure defined above. The same navigation keys shall be provided on every page even if the navigation key function is not required. Where a navigation key function is not required, i.e., the move up key on the plant overview screen, it shall be “grayed out”.
8. Levels of hierarchy shall be provided from the top-down as follows:
   a. Overall area map showing locations of all plant buildings covered by the PCS system of the Wastewater Treatment Plant with all relevant plant areas and all remote sites.
   b. Process stream overview mimic showing all elements in the process stream.
   c. Process element mimics (maximum 20 interactive points).
   d. Control window for equipment.
   e. Alarm page annunciator (grouped by plant area).
   f. Electrical supply sub-system mimic showing interactive information.
   g. Ethernet IP system overview.

9. Visual display facilities shall be provided to enhance operator visual monitoring of the plant, e.g.:
    a. Tank level displays or grouped area's with proportional fill graphics.
    b. Flow data screens.
    c. Analytical data screens (including analytical instrument data and settings).
    d. Pump and valve status/control loop boxes windows.
10. The view object shall open a further table which shall provide further details relating to the selected object.
11. The popup object shall be provided for all control actions so that the decision to carry out the action can be confirmed.
12. The following colors shall be used for data, objects, and message displays to indicate the current state:
    a. For Mimic Displays (Object Colors):
        1. Green: Motor Running Active, valve/gate opened.
        2. White/gray: Motor Stopped Inactive, valve/gate closed.
        3. Red: Equipment Fault.
        4. Mustard Yellow: Not available/failed.
        5. Purple: Illegal State Loss of Communications.
        6. Green text on black background: process variable.
        7. Black text on white background: setpoint variable.
    b. Information Boxes:
        1. The outline of the information box and any partitioning lines within it shall be colored black. The information text within it shall be colored black.
13. Process Lines:
    a. For detail mimics, process lines shall be generated so that the pipework has a thin black outline, with the process fluid fill color as per the Owner's preference (water – blue, chemical – orange, etc.) Match the existing PCS screens line colors.

B. Alarms and Events Logging:
1. Alarm and event log listings shall include the following items:
    a. Process generated alarms and changes of plant state originating with the plant process.
    b. PCS derived alarms from measured process analog values.
    c. Process device fault condition/state changes originating within the process PCS.
    d. PCS system faults/state changes.
    e. Communications faults/state changes.
    f. PLC faults.
    g. Ethernet/IP nodes comm. faults faults/state changes.
2. Alarms and events shall be logged with all digital signal changes occurring in the system, tagged with the following details as a minimum:
    a. Associated PCS Node / operations area.
    b. Time of occurrence.
    c. Description of condition.
    d. Signal state.
    e. Location of alarm accept and reset.

3. The acceptance of an alarm state shall also be logged in the alarms list as separate events.
4. Unaccepted current active alarms, accepted current active alarms, and cleared alarms shall appear in the alarms list as different colors.
5. The PCS system alarm annunciating system shall provide interaction with the PLC system alarms annunciating system by providing the following features:
    a. All alarms detected or generated by the PLCs shall be logged by the PCS.
    b. The PCS system shall also log alarm acknowledge and reset events.
    c. All alarms shall be processed and latched at the PLC processor level. All low, low-low, high, and high-high alarms and associated setpoints are set and processed at the PLC processor level.
    d. The alarms in the PCS system shall be divided into three alarm groups (all alarms must be shown on the faceplate symbol, faceplate, and alarm summary list):
        1. Priority 1 Alarms – High Priority Alarms shall be shown on the PCS screens and alarm summary list. High priority alarms require immediate action and they are dialed out. Alarm summary color shall be dark gray.
        2. Priority 2 Alarms – Medium Priority Alarms shall be shown on the PCS screens and alarm summary list. These alarms require immediate action during the day but do not go to the dialer. Alarm summary color shall be orange.
    e. The color coding of the alarms at the alarm summary list shall be as follows:
        1. Active and non-acknowledged – Alarm summary color will be flashing. Equipment color will be flashing yellow.
        2. Active and acknowledged – Alarm summary color will be steady. Equipment color will be steady yellow.
        3. Not-active and non-acknowledged – Alarm summary will be flashing. Equipment color will be flashing yellow. Note: Alarms should never be in this state as they are all latched at the processor level.
        4. Inactive acknowledged alarms will not be on the alarm summary list. Equipment color will be red (Off/not running) or green (On/running). Circuit breakers are Closed = red and Open = green.
        5. All alarms should be logged to the alarm history.
        6. All alarms shall be shown on the PCS alarm list screens to show Active and non-acknowledged alarms, Active and acknowledged alarms, and Not-active and non-acknowledged alarms.
    f. The alarm lists and alarm history shall have, but not be limited to, the following columns:
        1. Date of alarm activation/deactivation.
        2. Time of alarm activation/deactivation in hours, minutes, and seconds.
        3. Alarm process area.
        4. Alarm priority.
        5. PCS object/variable name.

6. Alarm State: Active and non-acknowledged, or active and acknowledged, or non-active and non-acknowledged.
7. Description of the alarm.

g. The PCS database shall also record the time of when the alarm is cleared and/or acknowledged.
h. All alarms shall be assigned to the appropriate plant process areas as shown in the Process Control Narratives and P&ID Drawings.

6. All equipment with associated flowmeters shall have a “Device running - no flow” alarm in the PCS. This alarm shall be activated 2 to 10 seconds after the device starts and a no flow condition is seen at the associated flowmeter.
7. Reporting and Report Formats:
   a. The PCS shall provide the facility for generating reports on plant and system data using the PCS reporting features.

C. Source Codes:
   1. The PICS Sub-contractor shall, upon delivery of any part of the custom software, provide for the retention on the premises of a copy of the source code thereof both in written form and in a magnetic or optical digital form.

D. Win911 - Alarm Dialer Software:
   1. Allow for 200 alarms to be programmed and notifications of up to 10 parties in Win911 as directed by the Owner and Engineer.

3.3 PCS SOFTWARE REQUIREMENTS

A. The PCS System Integrator shall be responsible for providing fully operational PCS applications software and for the FactoryTalk View SE InTouch and Rockwell PanelView applications to implement all the necessary control, monitoring, and communication functions required to operate the wastewater treatment plant as described in Section 406115, PICS SCOPE OF WORK; Section 406120, PROCESS CONTROL NARRATIVES-WWTP; Section 406160, PICS PLC I/O INDEX-WWTP; all other P&ID Drawings and Specifications; and herein. Any control function not detailed in the Process Control Narratives shall not relieve the System Integrator of their responsibility of providing the required fully operational software.

B. Basic layout, function and control strategy for the software shall be discussed and agreed with the Engineer before development of the software commences.

C. Software design shall be laid out in a modular manner; i.e., it shall be structured in program files, using simple programming logic, so that similar tasks are of a similar structure and size to enable ease of maintenance of programs.

D. Software shall be fully documented with each line of application software fully annotated with contact/relays given mnemonics directly related to the items of the plant. All data areas used shall be documented and a full memory map provided. Network and interface documentation shall be provided. A description of all function modules/blocks shall be provided i.e., analog handling block, PID block, Motor Start block, etc.

E. The Engineer has the right to view the software at any stage during its development. Regular meetings shall be held to review progress and establish development criteria and PCS detailed functionality.

F. The PCS System Integrator shall provide complete software programs with all the necessary up to date documentation prior to commissioning.

G. Any major changes, determined and agreed by the Engineer and the PCS System Integrator, shall require a complete re-test, in accordance with each step of the testing procedure.

3.4 DOCUMENTATION

A. The PCS System Integrator shall provide complete documentation pertaining to the design, installation, commissioning and operating, and maintenance of the PCS system provided.

B. Documentation Requirements:
   1. In addition to the requirements for the provision of documentation specified in Section 406110, PICS GENERAL REQUIREMENTS-WWTP, the PCS System Integrator shall provide the following documentation:
      a. Color prints of all system mimic displays developed from the Owner's outline designs.
      b. Database points schedule providing cross references including Plant Tag Number, processor address and point reference, PCS computer point reference, point description, and digital state description or analog range.
      c. Software documentation as described in previous paragraphs of this Section.
      d. Detailed operating manual describing all available operator functions.
      e. Detailed Technical and Maintenance Manuals providing details of all equipment and software provided, detailing how the equipment and software should be maintained. This shall also include detailed information relating to operating diagnostics facilities and software tools and providing additional engineering and system development.

PART 4 - EXECUTION

4.1 REFERENCES – GENERAL

A. Design and Operating Description:
   1. The PCS System Integrator shall develop and populate the database with corresponding I/O points, and develop and configure the PCS Application Software based on Section 406120,PROCESS CONTROL NARRATIVES-WWTP, and all other I&C Specification sections and Drawings.
   2. General: The Plant Control System application shall perform all data acquisition and alarming for the plant process. It shall log and trend all analog values, and log and display all alarms from the WWTP. Each data point shall be defined by a tag name consisting of a combination of alphanumeric characters. Some programming requirements are described below and in Section 406120, PROCESS CONTROL NARRATIVES-WWTP, but this description in no way relieves the PCS System Integrator from supplying all programming that shall be necessary to accomplish the functional requirements of the Specifications. The PCS System Integrator is responsible for gathering data and expending in-house process expertise to enable the generation of a complete data base (with ranges, alarm points, blackouts, defaults, and descriptions) and a complete set of process graphics.

3. Analog Inputs and Analog PLC Registers shall be sampled at a fixed rate and normalized to eliminate zero drift errors and gain errors, and all analog signals shall be scaled as indicated in the instrument index. Analog signal filtering requirements shall be determined by the PICS Sub-contractor during the construction period. All transducer signals which bear a nonlinear relationship to the associated measured variable shall be linearized. Signal linearization may be accomplished using table look-up linear interpolation techniques, straight line segment conversion multi-techniques, or by using conversion equations.

4.2 INTERACTIVE PCS DISPLAY SYSTEM

A. General: This project shall utilize FactoryTalk View SE for the SCADA computer application, as well as Rockwell Software Studio5000 for Operator Interface Terminals. The SCADA computer shall be used to monitor all process values and alarms, and to manipulate and control system variables for the plant equipment. They shall function with equal process monitoring and manipulation capability, thereby giving complete flexibility to assign any mix of displays relevant to a given situation. The Plant Control System HMI/SCADA shall permit process monitoring and operator data and settings manipulation, and display of operational reference data for the WWTP.

4.3 SYSTEM DOCUMENTER

A. All documentation shall be printed/plotted in both a text and graphic format. All documentation shall be accessible in report formats. It is not acceptable to utilize screen prints as a documentation report method. The Engineering Station shall provide the facility to produce the following documentation:
   1. Current control system databases (including tags, descriptors, alarm limits, engineering units, associated alarm priority, logical states, etc.), control loops, and ladder logics.
   2. Definition of the current hardware configuration including location and associated panel number.
   3. Definition of the current display hierarchy and all displays currently in the system.

B. Manually Inputted Data Display: All data which is manually inputted in lieu of scanned process data shall always be displayed with a color exclusively dedicated to out-of-scan data.

C. Operator Interaction: The operator shall be provided with a means of interacting with the various displays which assist monitoring (overviews), permit control intervention (groups), provide parameter review and adjustment (detail), are predictive (trends), and assist the operator in diagnostics (alarms, schematics, menus, etc.). The operator shall interact with these displays, order changes in values, and modify configurations in a man-machine conversational mode via any of the following interfaces: Track ball, mouse, touch screen, or function oriented touch-pad keyboard. The entry device shall be integrated with the man-machine design structure to enable a minimum amount of key strokes in common operations such as "Alarm Acknowledge", "On/Off", and "Fast/Slow" manipulations. Long strings of alphanumeric coded entries via buttons are unacceptable for process operating procedures.

4.4 EXAMPLE PCS SCREENS

A. Example PCS screen views are shown below:

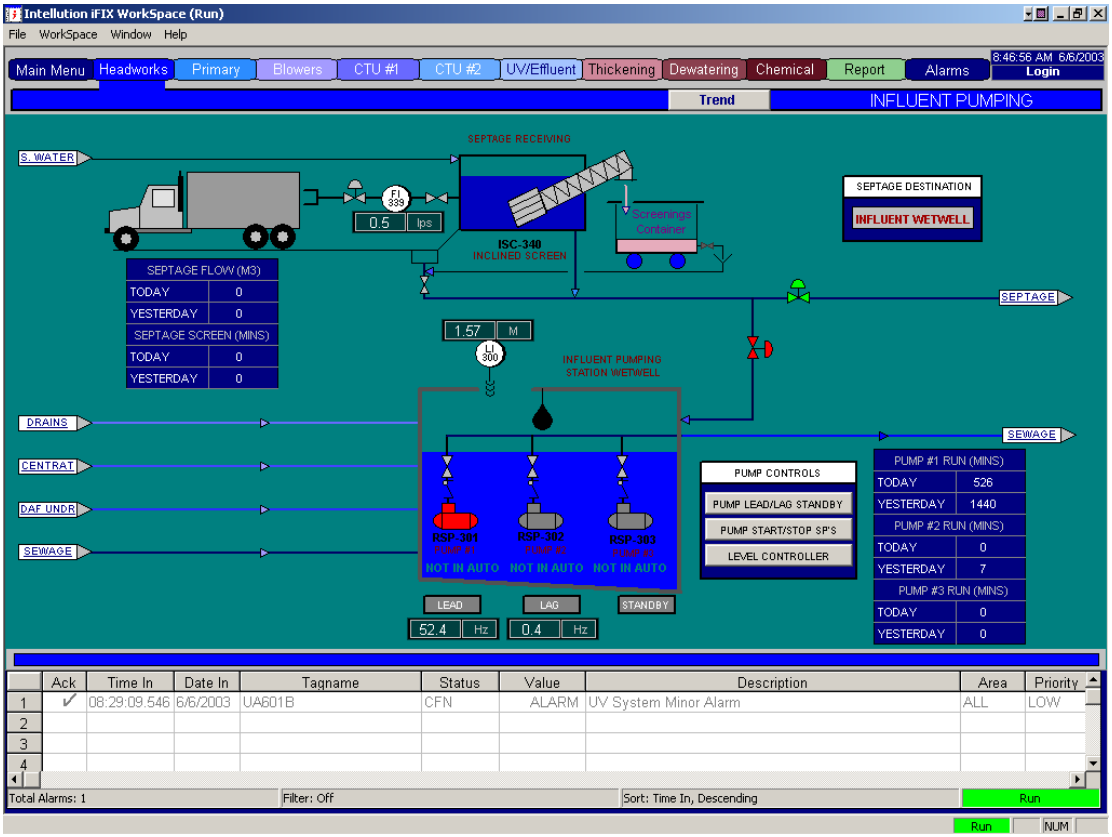

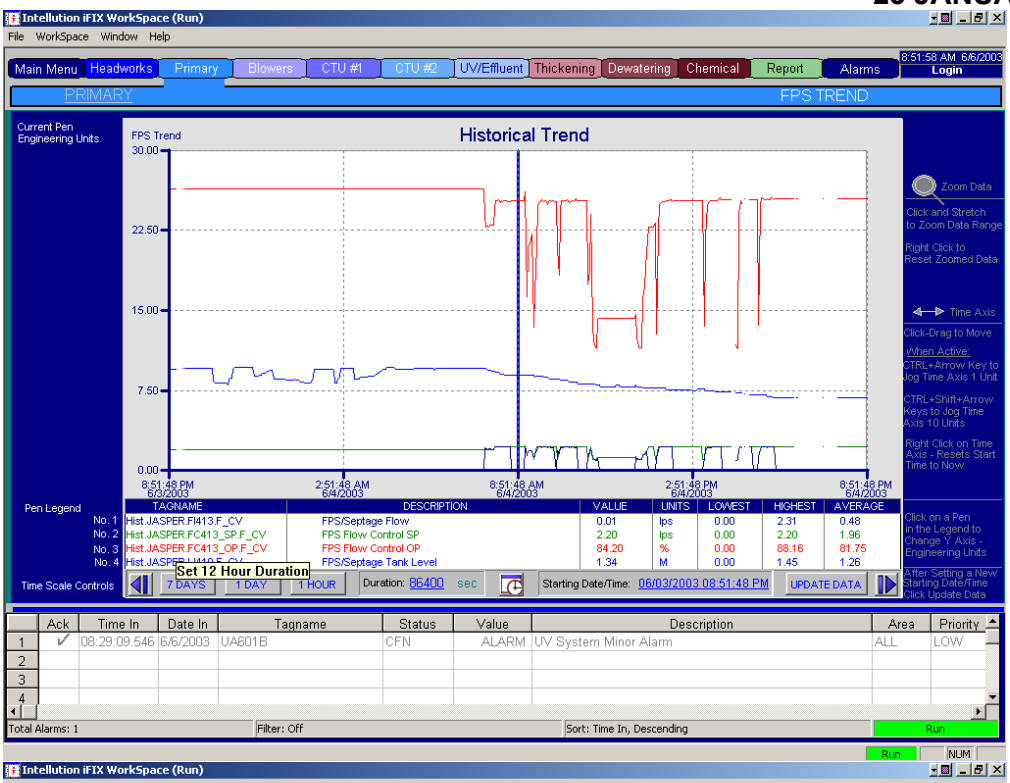
Intellution iFIX WorkSpace (Run)
File WorkSpace Window Help
Main Menu Headworks Primary Blowers CTU #1 CTU #2 UV/Effluent Thickening Dewatering Chemical Report Alarms
8:51:58 AM 6/6/2003
Login
PRIMARY
FPS TREND
Current Pen Engineering Units
FPS Trend
Historical Trend
30.00
22.50
15.00
7.50
0.00
8:51:48 PM 6/3/2003
2:51:48 AM 6/4/2003
8:51:48 AM 6/4/2003
2:51:48 PM 6/4/2003
8:51:48 PM 6/4/2003
Zoom Data
Click and Stretch to Zoom Data Range
Right Click to Reset Zoomed Data
Time Axis
Click-Drag to Move
When Active:
CTRL+Arrow Key to Jog Time Axis 1 Unit
CTRL+Shift+Arrow Keys to Jog Time Axis 10 Units
Right Click on Time Axis - Resets Start Time to Now
Pen Legend
TAGNAME DESCRIPTION VALUE UNITS LOWEST HIGHEST AVERAGE
No. 1 Hist.JASPER.FI413.F_CV FPS/Septage Flow 0.01 lps 0.00 2.31 0.48
No. 2 Hist.JASPER.FC413_SP.F_CV FPS Flow Control SP 2.20 lps 0.00 2.20 1.96
No. 3 Hist.JASPER.FC413_OP.F_CV FPS Flow Control OP 84.20 % 0.00 88.16 81.75
No. 4 Hist.JASPER.LI410.F_CV FPS/Septage Tank Level 1.34 M 0.00 1.45 1.26
Click on a Pen in the Legend to Change Y Axis - Engineering Units
Time Scale Controls
7 DAYS 1 DAY 1 HOUR
Set 12 Hour Duration
Duration: 86400 sec
Starting Date/Time: 06/03/2003 08:51:48 PM
UPDATE DATA
After Setting a New Starting Date/Time Click Update Data
Ack Time In Date In Tagname Status Value Description Area Priority
1 ✓ 08:29:09.546 6/6/2003 UA601B CFN ALARM UV System Minor Alarm ALL LOW
Total Alarms: 1
Filter: Off
Sort: Time In, Descending
Run
NUM

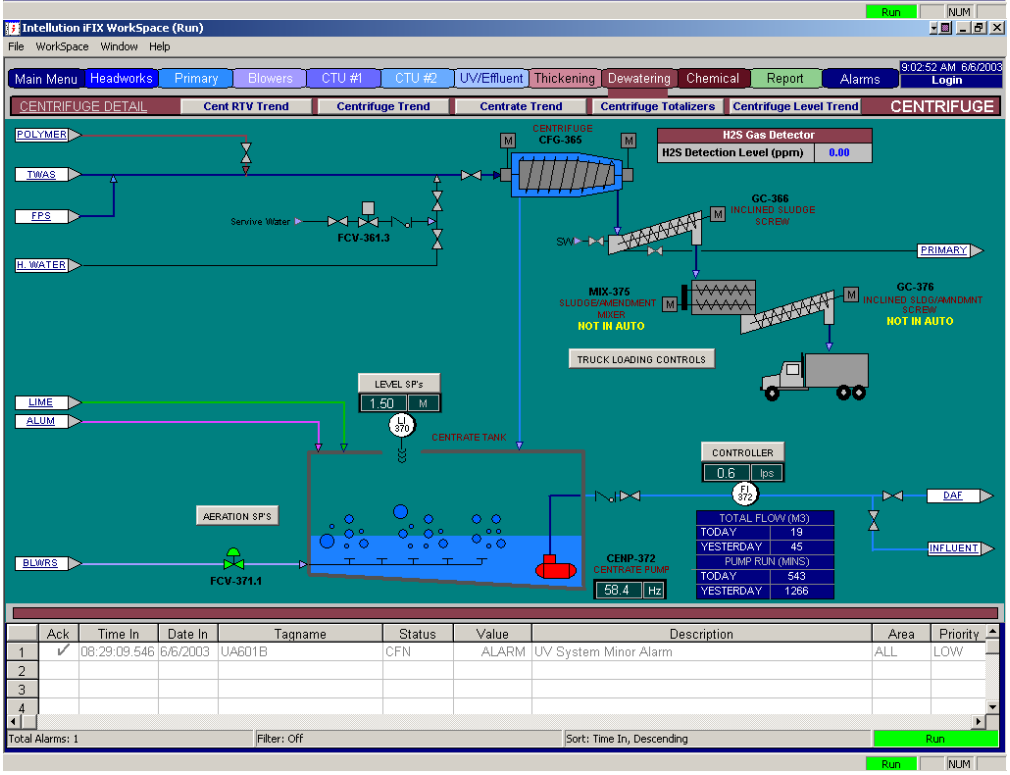
Intellution iFIX WorkSpace (Run)
File WorkSpace Window Help
Main Menu Headworks Primary Blowers CTU #1 CTU #2 UV/Effluent Thickening Dewatering Chemical Report Alarms
9:02:52 AM 6/6/2003
Login
CENTRIFUGE DETAIL
Cent RTV Trend
Centrifuge Trend
Centrate Trend
Centrifuge Totalizers
Centrifuge Level Trend
CENTRIFUGE
POLYMER
TWAS
FPS
H. WATER
CENTRIFUGE
CFG-365
H2S Gas Detector
H2S Detection Level (ppm) 0.00
Servive Water
FCV-361.3
GC-366
INCLINED SLUDGE SCREW
SW
PRIMARY
MIX-375
SLUDGE/AMENDMENT MIXER
NOT IN AUTO
GC-376
INCLINED SLDG/AMNDMNT SCREW
NOT IN AUTO
TRUCK LOADING CONTROLS
LEVEL SP's
1.50 M
LI 370
LIME
ALUM
CENTRATE TANK
CONTROLLER
0.6 lps
FI 372
DAF
INFLUENT
AERATION SP'S
BLWRS
FCV-371.1
CENP-372
CENTRATE PUMP
58.4 Hz
TOTAL FLOW (M3)
TODAY 19
YESTERDAY 45
PUMP RUN (MINS)
TODAY 543
YESTERDAY 1266
Ack Time In Date In Tagname Status Value Description Area Priority
1 ✓ 08:29:09.546 6/6/2003 UA601B CFN ALARM UV System Minor Alarm ALL LOW
Total Alarms: 1
Filter: Off
Sort: Time In, Descending
Run
NUM

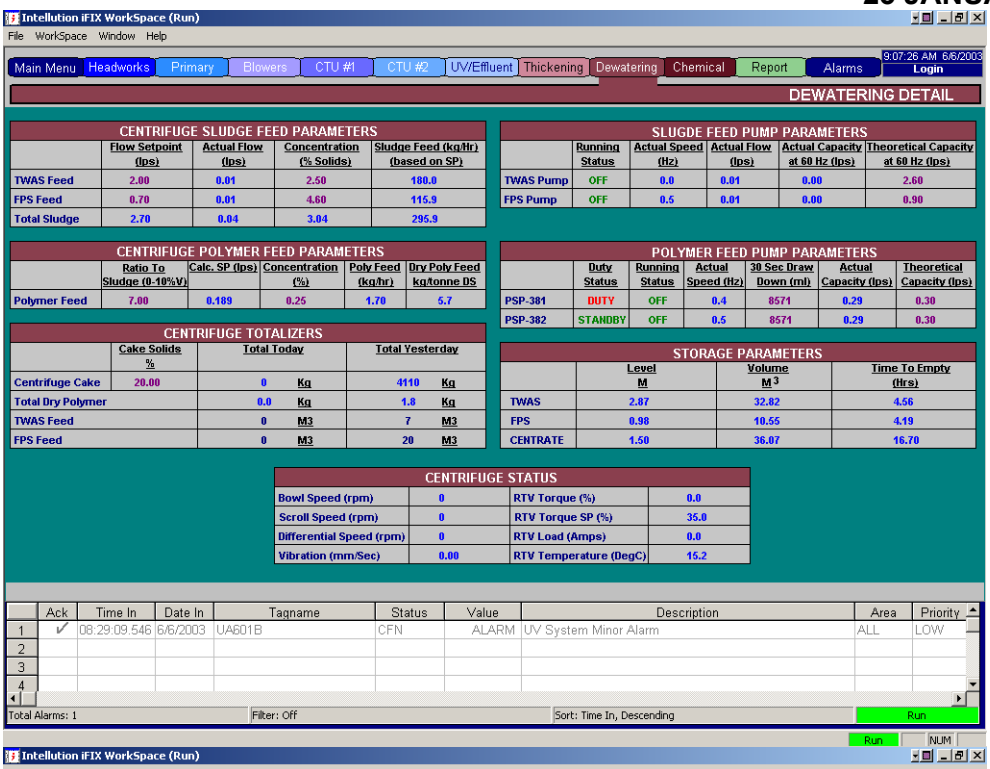
Intellution iFIX WorkSpace (Run)
File WorkSpace Window Help
Main Menu Headworks Primary Blowers CTU #1 CTU #2 UV/Effluent Thickening Dewatering Chemical Report Alarms
9:07:26 AM 6/6/2003
Login
DEWATERING DETAIL
CENTRIFUGE SLUDGE FEED PARAMETERS
Flow Setpoint (lps) | Actual Flow (lps) | Concentration (% Solids) | Sludge Feed (kg/Hr) (based on SP)
TWAS Feed 2.00 0.01 2.50 180.0
FPS Feed 0.70 0.01 4.60 115.9
Total Sludge 2.70 0.04 3.04 295.9
SLUGDE FEED PUMP PARAMETERS
Running Status | Actual Speed (Hz) | Actual Flow (lps) | Actual Capacity at 60 Hz (lps) | Theoretical Capacity at 60 Hz (lps)
TWAS Pump OFF 0.0 0.01 0.00 2.60
FPS Pump OFF 0.5 0.01 0.00 0.90
CENTRIFUGE POLYMER FEED PARAMETERS
Ratio To Sludge (0-10%V) | Calc. SP (lps) | Concentration (%) | Poly Feed (kg/hr) | Dry Poly Feed kg/tonne DS
Polymer Feed 7.00 0.189 0.25 1.70 5.7
POLYMER FEED PUMP PARAMETERS
Duty Status | Running Status | Actual Speed (Hz) | 30 Sec Draw Down (ml) | Actual Capacity (lps) | Theoretical Capacity (lps)
PSP-381 DUTY OFF 0.4 8571 0.29 0.30
PSP-382 STANDBY OFF 0.5 8571 0.29 0.30
CENTRIFUGE TOTALIZERS
Cake Solids % | Total Today | Total Yesterday
Centrifuge Cake 20.00 0 Kg 4110 Kg
Total Dry Polymer 0.0 Kg 1.8 Kg
TWAS Feed 0 M3 7 M3
FPS Feed 0 M3 20 M3
STORAGE PARAMETERS
Level M | Volume M3 | Time To Empty (Hrs)
TWAS 2.87 32.82 4.56
FPS 0.98 10.55 4.19
CENTRATE 1.50 36.07 16.70
CENTRIFUGE STATUS
Bowl Speed (rpm) 0 RTV Torque (%) 0.0
Scroll Speed (rpm) 0 RTV Torque SP (%) 35.0
Differential Speed (rpm) 0 RTV Load (Amps) 0.0
Vibration (mm/Sec) 0.00 RTV Temperature (DegC) 15.2
Ack Time In Date In Tagname Status Value Description Area Priority
1 ✓ 08:29:09.546 6/6/2003 UA601B CFN ALARM UV System Minor Alarm ALL LOW
Total Alarms: 1 Filter: Off Sort: Time In, Descending Run
Run NUM

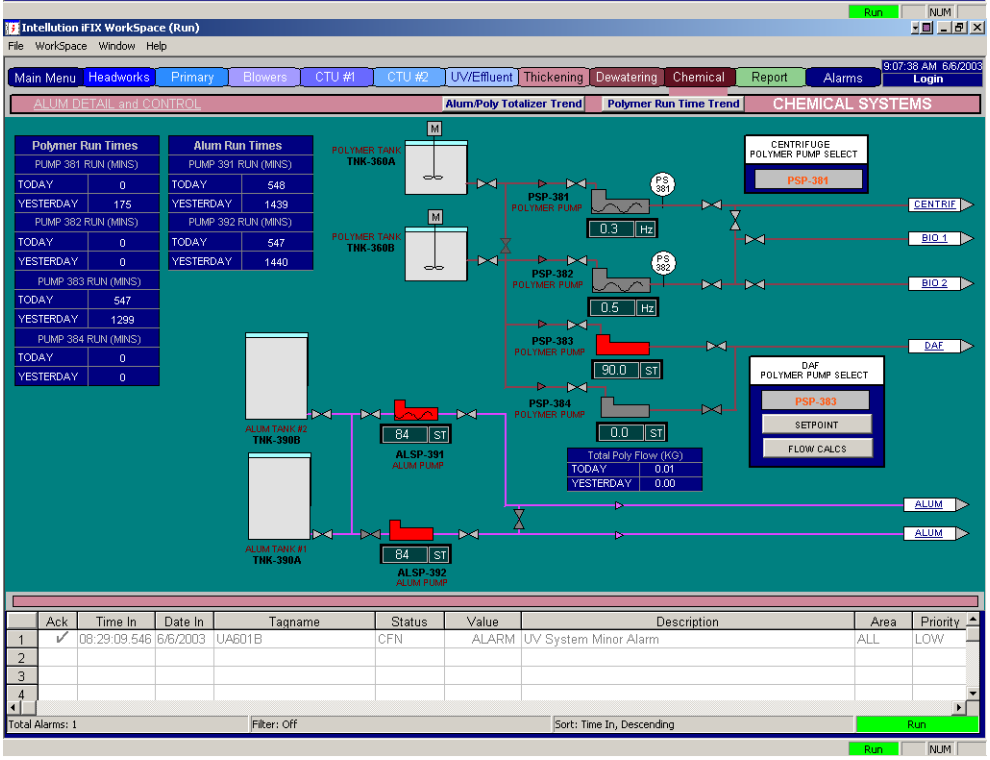
Intellution iFIX WorkSpace (Run)
File WorkSpace Window Help
Main Menu Headworks Primary Blowers CTU #1 CTU #2 UV/Effluent Thickening Dewatering Chemical Report Alarms
9:07:38 AM 6/6/2003
Login
ALUM DETAIL and CONTROL
Alum/Poly Totalizer Trend
Polymer Run Time Trend
CHEMICAL SYSTEMS
Polymer Run Times
PUMP 381 RUN (MINS) TODAY 0 YESTERDAY 175
PUMP 382 RUN (MINS) TODAY 0 YESTERDAY 0
PUMP 383 RUN (MINS) TODAY 547 YESTERDAY 1299
PUMP 384 RUN (MINS) TODAY 0 YESTERDAY 0
Alum Run Times
PUMP 391 RUN (MINS) TODAY 548 YESTERDAY 1439
PUMP 392 RUN (MINS) TODAY 547 YESTERDAY 1440
POLYMER TANK TNK-360A
POLYMER TANK TNK-360B
PSP-381 POLYMER PUMP 0.3 Hz
PSP-382 POLYMER PUMP 0.5 Hz
PSP-383 POLYMER PUMP 90.0 ST
PSP-384 POLYMER PUMP 0.0 ST
CENTRIFUGE POLYMER PUMP SELECT
PSP-381
DAF POLYMER PUMP SELECT
PSP-383
SETPOINT
FLOW CALCS
CENTRIF
BIO 1
BIO 2
DAF
ALUM
ALUM
ALUM TANK #2 TNK-390B
ALUM TANK #1 TNK-390A
ALSP-391 ALUM PUMP 84 ST
ALSP-392 ALUM PUMP 84 ST
Total Poly Flow (KG) TODAY 0.01 YESTERDAY 0.00
Ack Time In Date In Tagname Status Value Description Area Priority
1 ✓ 08:29:09.546 6/6/2003 UA601B CFN ALARM UV System Minor Alarm ALL LOW
Total Alarms: 1 Filter: Off Sort: Time In, Descending Run
Run NUM

Tag	Description	Today (Mins)	Yesterday (Mins)
SCR-210	Helical Screw Fine Screen	157	627
AB-273	Process Air Blower 273	553	1439
AB-274	Process Air Blower 274	0	0
ISC-340	Septage Screw Screen	0	0
RSP-301	Influent Raw Sewage Pump #1	552	1440
RSP-302	Influent Raw Sewage Pump #2	0	7
RSP-303	Influent Raw Sewage Pump #3	0	0
PRSP-406	Primary Sludge Transfer Pump	0	11
PSP-413	Primary Sludge Pump (To Centrifuge)	0	175
TWP-363	TWAS Sludge Pump (To Centrifuge)	0	175
CENP-372	Centrate Pump	552	1266
PSP-381	Polymer Pump 381	0	175
PSP-382	Polymer Pump 382	0	0
PSP-383	Polymer Pump 383	552	1299
PSP-384	Polymer Pump 384	0	0
ALSP-391	Alum Pump 391	553	1439
ALSP-392	Alum Pump 392	552	1440
WASP-561	CTU #1 WAS Pump	553	1245
RASP-572	CTU #1 RAS Pump	553	1440
WASP-562	CTU #2 WAS Pump	553	1245
RASP-582	CTU #2 RAS Pump	553	1440
HC-654	Hypo Chlorite Pump	0	0
SWP-653	Effluent Service Water Pump	39	256

Tag	Description	Today (M^3)	Yesterday (M^3)
FQ230	Influent Flow	1129	3992
FQ339	Septage Flow	0	0
FQ201	Jasper Park Lodge Flow	251	732
FQ406	Primary Sludge Transfer Flow	0.0	3.0
FQ413	Primary Sludge To Centrifuge Flow	0	20
FQ363	TWAS Sludge To Centrifuge Flow	0	7
FQ372	Centrate Flow	19	45
FQ561	CTU #1 WAS Flow	65	156
FQ572	CTU #1 RAS Flow	762	1985
FQ562	CTU #2 WAS Flow	56	156
FQ582	CTU #2 RAS Flow	762	1985
FQ620	Effluent Flow	1130	3995
FQALUM	Alum Solution Total	91.1 kg	220.1 kg
FQCAKE	Centrifuge Cake	0 kg	4110 kg
FQPOLY_CENT	Total Centrifuge Dry Polymer	0.0 kg	1.8 kg
FQPOLY_DAF	Total DAF Dry Polymer	0.01 kg	0.00 kg

	Ack	Time In	Date In	Tagname	Status	Value	Description	Area	Priority
1	✓	08:29:09.546	6/6/2003	UA601B	CFN	ALARM	UV System Minor Alarm	ALL	LOW
2									
3									
4									

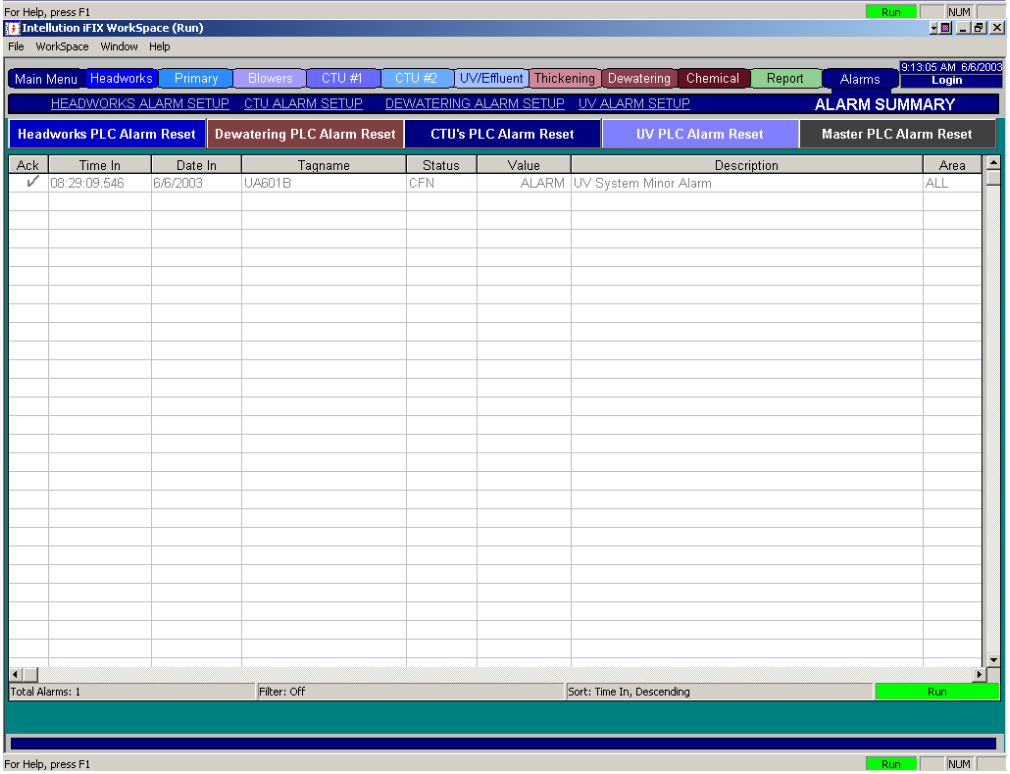

Ack	Time In	Date In	Tagname	Status	Value	Description	Area
✓	08:29:09.546	6/6/2003	UA601B	CFN	ALARM	UV System Minor Alarm	ALL

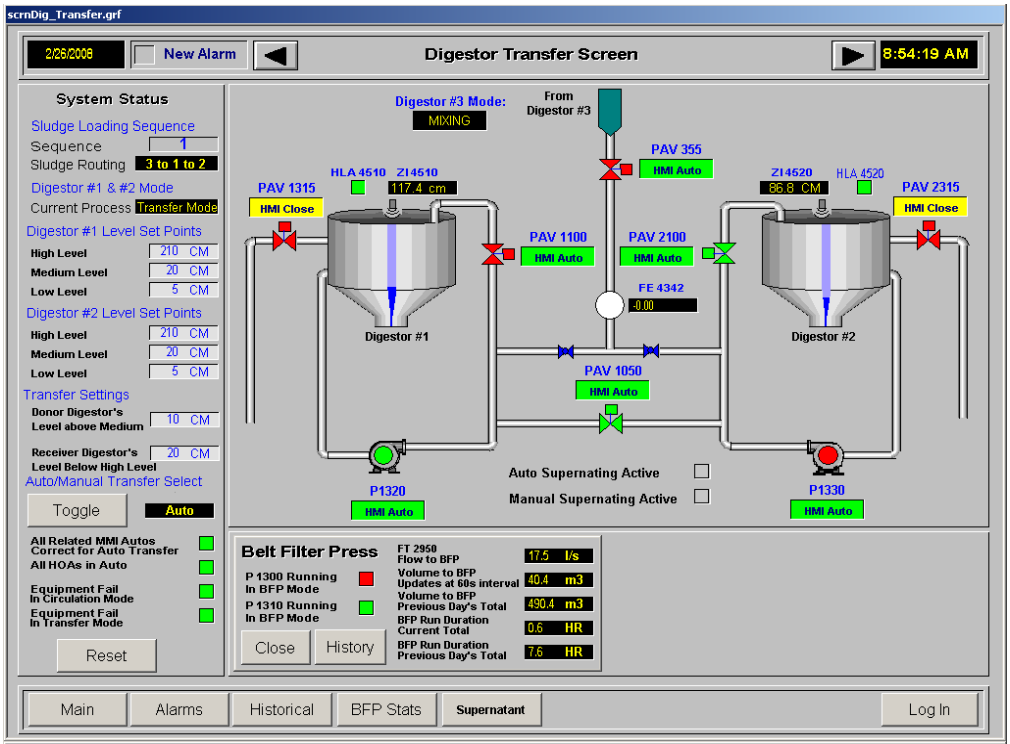
scrnDig_Transfer.grf
2/26/2008
New Alarm
Digestor Transfer Screen
8:54:19 AM
System Status
Sludge Loading Sequence
Sequence 1
Sludge Routing 3 to 1 to 2
Digestor #1 & #2 Mode
Current Process Transfer Mode
Digestor #1 Level Set Points
High Level 210 CM
Medium Level 20 CM
Low Level 5 CM
Digestor #2 Level Set Points
High Level 210 CM
Medium Level 20 CM
Low Level 5 CM
Transfer Settings
Donor Digestor's Level above Medium 10 CM
Receiver Digestor's Level Below High Level 20 CM
Auto/Manual Transfer Select
Toggle
Auto
All Related MMI Autos Correct for Auto Transfer
All HOAs in Auto
Equipment Fail In Circulation Mode
Equipment Fail In Transfer Mode
Reset
Digestor #3 Mode:
MIXING
From Digestor #3
PAV 355
HMI Auto
PAV 1315
HMI Close
HLA 4510
ZI4510
117.4 cm
ZI4520
86.8 CM
HLA 4520
PAV 2315
HMI Close
PAV 1100
HMI Auto
PAV 2100
HMI Auto
FE 4342
-0.00
Digestor #1
Digestor #2
PAV 1050
HMI Auto
P1320
HMI Auto
Auto Supernating Active
Manual Supernating Active
P1330
HMI Auto
Belt Filter Press
P 1300 Running In BFP Mode
P 1310 Running In BFP Mode
FT 2950 Flow to BFP 17.5 l/s
Volume to BFP Updates at 60s interval 40.4 m3
Volume to BFP Previous Day's Total 490.4 m3
BFP Run Duration Current Total 0.6 HR
BFP Run Duration Previous Day's Total 7.6 HR
Close
History
Main
Alarms
Historical
BFP Stats
Supernatant
Log In

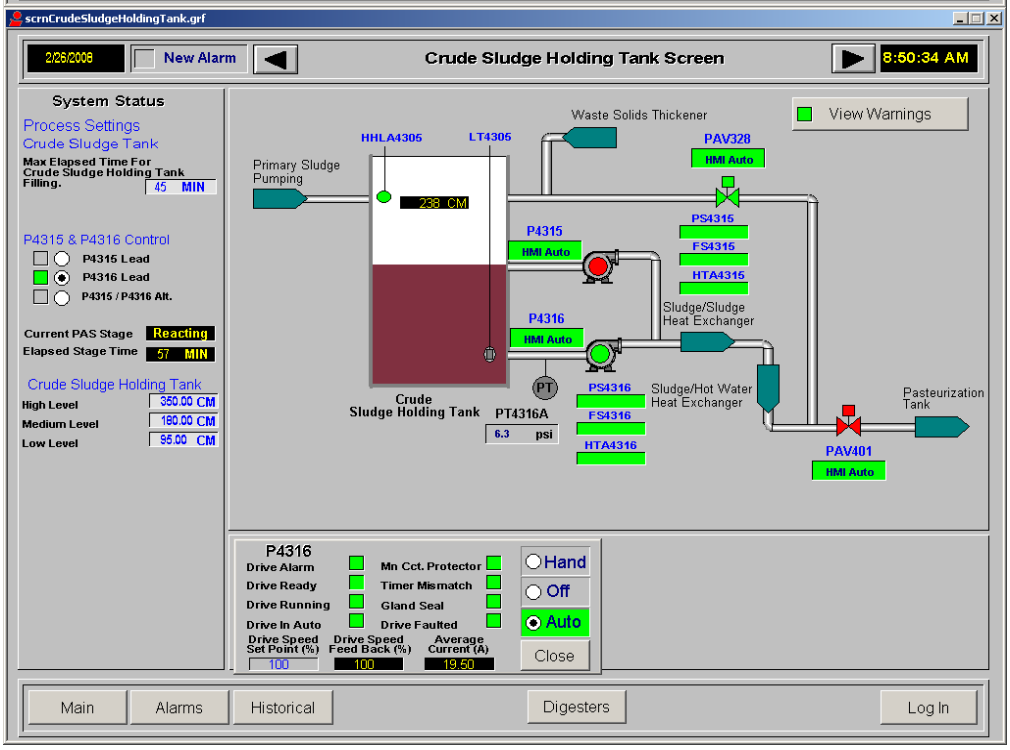
scrnCrudeSludgeHoldingTank.grf
2/26/2008
New Alarm
Crude Sludge Holding Tank Screen
8:50:34 AM
System Status
Process Settings
Crude Sludge Tank
Max Elapsed Time For Crude Sludge Holding Tank Filling. 45 MIN
P4315 & P4316 Control
P4315 Lead
P4316 Lead
P4315 / P4316 Alt.
Current PAS Stage Reacting
Elapsed Stage Time 57 MIN
Crude Sludge Holding Tank
High Level 350.00 CM
Medium Level 180.00 CM
Low Level 95.00 CM
Waste Solids Thickener
View Warnings
HHLA4305
LT4305
PAV328
HMI Auto
Primary Sludge Pumping
238 CM
PS4315
FS4315
HTA4315
P4315
HMI Auto
Sludge/Sludge Heat Exchanger
P4316
HMI Auto
PT
PS4316
FS4316
HTA4316
Sludge/Hot Water Heat Exchanger
Crude Sludge Holding Tank
PT4316A
6.3 psi
Pasteurization Tank
PAV401
HMI Auto
P4316
Drive Alarm
Drive Ready
Drive Running
Drive In Auto
Mn Cct. Protector
Timer Mismatch
Gland Seal
Drive Faulted
Drive Speed Set Point (%) 100
Drive Speed Feed Back (%) 100
Average Current (A) 19.50
Hand
Off
Auto
Close
Main
Alarms
Historical
Digesters
Log In

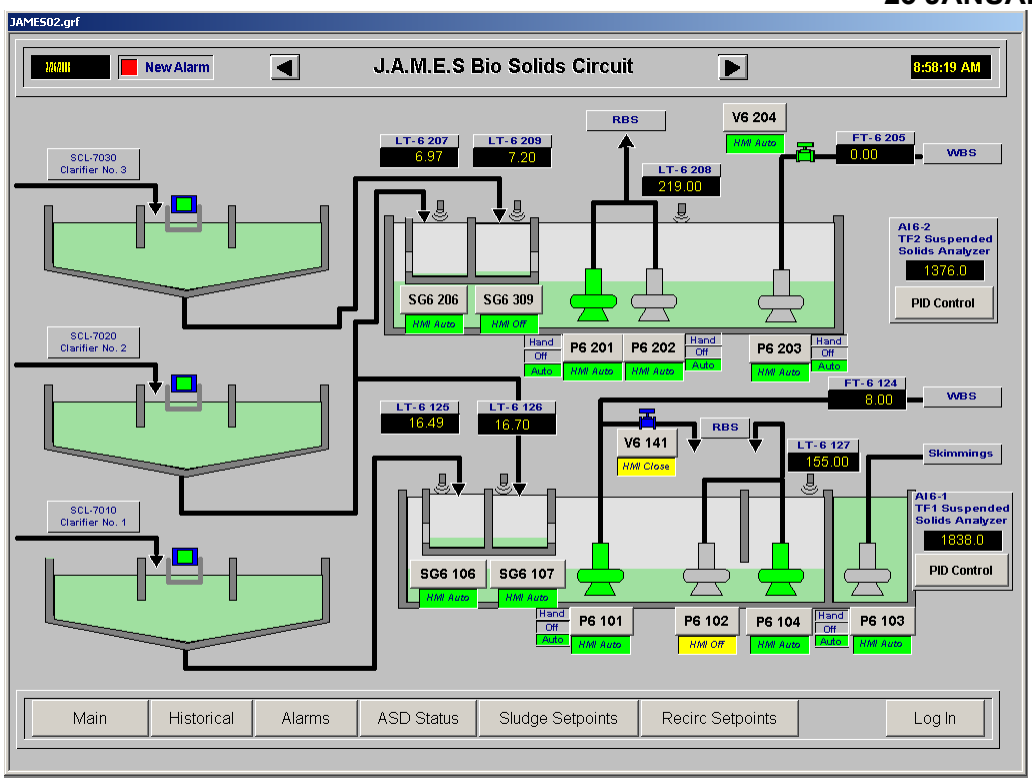

END OF SECTION

SECTION 406177 – PLANT CONTROL SYSTEM (PCS) HARDWARE AND SOFTWARE – WWTP

PART 1 - GENERAL

1.1 WORK INCLUDED

A. This section covers furnishing and installing the Supervisory Control and Data Acquisition (SCADA) computer system hardware, PLC programming, SCADA, Historian, and Reporting software on this project, complete. All software shall be provided with all required licenses. All equipment, products, and execution must meet all requirements detailed in this Specification. The plant control system (PCS) computer located in the lab/control room and specified below shall host the software.

B. Also refer to the Control System Architecture Drawings; Section 406110, PICS GENERAL REQUIREMENTS-WWTP; Section 406115, PICS SCOPE OF WORK-WWTP; Section 406127, PICS INDUSTRIAL ETHERNET NETWORK-WWTP; and Section 406176, PLANT CONTROL SYSTEM SOFTWARE REQUIREMENTS-WWTP for more information.

1.2 GENERAL REQUIREMENTS

A. Also see the GENERAL CONDITIONS, Division 01, GENERAL REQUIREMENTS, and Section 406110, PROCESS INSTRUMENTATION AND CONTROLS SYSTEM (PICS) GENERAL REQUIREMENTS-WWTP which contain information and requirements that apply to the work specified herein and are mandatory for this project.

B. Like items of equipment or materials provided hereunder shall be the end products of one manufacturer to achieve standardization for appearance, maintenance, and replacement, and shall include all necessary appurtenances for a complete and working system. The equipment or materials shall be the product of a manufacturer regularly engaged in the production of equipment or materials for the specified use. The manufacturer shall have the sole responsibility for the proper functioning and coordination of the equipment or materials as furnished.

C. The Contractor or the PICS Sub-contractor shall provide all required miscellaneous equipment and materials, as shown on the Drawings and in accordance with these Specifications. The Contractor or the PICS Sub-contractor shall furnish all equipment and material items, whether specified or not, as necessary to provide a complete, operable instrumentation and control (I&C) system.

1.3 SUBMITTALS

A. Submittals shall be provided as specified in Section 013300, SUBMITTAL PROCEDURES and Section 406110, PROCESS INSTRUMENTATION AND CONTROL SYSTEMS (PICS) GENERAL REQUIREMENTS-WWTP.

B. Submit product descriptive data for each type of SCADA hardware and software element used on this project.

C. Provide a demonstration of the proposed SCADA software in a two-hour workshop with the Engineer and Owner's personnel. General contractor shall coordinate schedule and location of the workshop. PICS contractor shall provide a presentation with slides, video, and access to a sample system that clearly shows the setup, use, and capabilities of the proposed system for visual layout, access to equipment status signals, set points, and PID loops where applicable, trend screens, data storage, report generation, alarm calling, and any other capabilities the contractor wishes to demonstrate.

PART 2 - PRODUCTS

2.1 SCADA HARDWARE

A. PCS Computer:
1. Desktop.
2. CPU: Intel Xeon E-2388G (8C, 3.2Ghz, 5.1 GHz Turbo, 95W).
3. Minimum 64GB DDR5 RAM.
4. Integrated SAS/SATA RAID 1 Controller.
5. Two x 1TB Hard Disk Drives in Raid 1 configuration.
6. . Quad-Port 2.5 GBE Network Adapter PCIe 3.1.
7. DVD-RW Drive SATA.
8. Minimum four USB 3.0 Ports.
9. NVIDIA T1000 4gb Professional Graphics Card, GDDR6 Memory, 1260MHz, single slot design.
10. 750W Power Supply.
11. Operating System: Windows 11 Pro 64bit.
12. MS Office Professional.
13. Tower with additional cooling fan.
14. Manufacturer and Model: Dell Pro Max 16 Workstation or Engineer approved equal.

B. Main Plant SCADA Monitors: Provide two monitors as indicated below:
1. Size: 24-inch.
2. Max Resolution: 1920 x 1080 at 60Hz.
3. Pixel Pitch: 0.2745 mm.
4. Interfaces: 1 VGA and 1 HDMI connector.
5. Power Supply: 120VAC.
6. Response Time: 5ms.
7. Manufacturer and Model: Dell SE2425H or Engineer approved equal.

C. Provide a USB keyboard and mouse.

D. Provide SCADA computer UPS as indicated below:
1. True On-Line.
2. On-Line Input Voltage: 84-140VAC.
3. On-Line Frequency: 60Hz +/-5Hz.
4. Output: 120VAC +/-5%.
5. On-Battery Wave Form: Sine-wave.
6. Batter Runtime: Full Load 5 Minutes.
7. Manufacturer and Model: Leibert GXT5-500LVRT2UXL or Engineer approved equal.

2.2 SCADA SOFTWARE

A. Provide new Rockwell Software (installed on the main WWTP SCADA computer): Studio 5000 Professional Edition 9324-RLD700NX-ENE.

B. Provide new SCADA software as indicated below:
   1. One Rockwell Software 9701-VWSTENE FTView Studio.
   2. Two Rockwell Software 9701-VWSS100LENE FTView SE Server 100 Displays.
   3. Three Rockwell Software 9701-VWSCWAENE FTView Read/Write Client.
   4. One Rockwell Software 9518-HSE500 FT Historian SE500 points .
   5. One Rockwell Software 9518-HSEADV FT Historian POC DA and HAD Servers.
   6. One Sytech XL1PM XL Reporter).
   7. Provide Rockwell Automation Support contract for all Rockwell hardware and software: TechConnect Self-Assist Support. The support contract shall be provided for the duration of the project construction and commissioning

C. Provide new Win-911 Alarm Dialer software with modem as indicated below:
   1. Multitech External USB TAPI compliant voice modem - Win-911/Tapi/USB.
   2. Win911/Standard plus 2-way communication with all notifiers: SMS, email, voice, 10 smartphone apps. Allows for remote acknowledgements, alarm requests and report requests.

PART 3 - EXECUTION

3.1 SCADA SYSTEM

A. All Software shall be licensed to the Owner.

B. Install computer software as listed above.

C. The PCS computer shall be provided with installed operating system and Microsoft Office software.

END OF SECTION

SECTION 406180 – PICS TESTING, CALIBRATION, AND INSTALLATION VERIFICATION – WWTP

PART 1 - GENERAL

1.1 WORK INCLUDED

A. This section covers the provision of all necessary testing, instrument calibration, and installation verification for each PICS system and piece of equipment, complete with written reports prior to system completion. All equipment, products, and execution must meet all requirements detailed in this Specification.

B. After system completion (or parts thereof), the Contractor and PICS Sub-contractor shall commence commissioning and start-up activities as specified in Section 406181, PICS COMMISSIONING AND START-UP-WWTP.

1.2 GENERAL REQUIREMENTS

A. Also see the GENERAL CONDITIONS, Division 01, GENERAL REQUIREMENTS, and Section 406110, PROCESS INSTRUMENTATION AND CONTROLS SYSTEM (PICS) GENERAL REQUIREMENTS-WWTP which contain information and requirements that apply to the work specified herein and are mandatory for this project.

B. The Contractor or the PICS Sub-contractor shall provide all required miscellaneous testing and calibration equipment and materials, whether specified or not, as necessary to test, calibrate, and verify a complete, operable process instrumentation and controls system.

PART 2 - PRODUCTS – NOT USED

PART 3 - EXECUTION

3.1 GENERAL DESCRIPTION OF WORK

A. Conform to the general requirements in Section 406110, PICS GENERAL REQUIREMENTS-WWTP regarding testing of the instrumentation and control equipment, and coordinate instrumentation and control work to facilitate testing of other equipment.

B. Prior to the final commissioning and demonstration of the PICS; test, check, and calibrate all portions of the control system for satisfactory operation. All tests shall be completed in the presence of the Engineer and/or their representative, suitably logged, tabulated, and signed by the PICS Sub-contractor on approved Checkout Sheets provided by the PICS Sub-contractor and incorporated in the project documentation. Submit Checkout Sheets to the Engineer for review and approval a minimum of 4 weeks prior to the date for which commissioning is scheduled

C. Any manufacturer, supplier, or PICS Sub-contractor who objects to the test procedures, methods, and test voltage levels specified herein shall confirm their objections in writing at least 10 working days prior to the Bid Opening date stating all reasons for such objections. Failing to do this constitutes acceptance of all test procedures stated herein and ensures that warranties are not voided by such tests and procedures.

D. The Engineer will not attempt to carry out commissioning unless all equipment and systems to be commissioned are in full readiness, and the commissioning technician or technicians and test equipment are present. The cost of any delay or demobilization and re-mobilization of the Engineer's forces as a result of any of the above not being in readiness at the scheduled time will be borne by the Contractor and/or PICS Sub-contractor. At the Contractor's option, the Engineer will remain on site to assist the PICS Sub-contractor on make system ready activities at a cost to the Contractor of $250.00 per hour, or the Engineer will leave and return at a future time with travel time and costs reimbursed to the Owner.

E. Refer to Section 406110, PICS GENERAL REQUIREMENTS-WWTP for general instrumentation and control requirements related to testing, calibration, and installation verification.

F. Refer to Section 406181, PICS COMMISSIONING AND START-UP-WWTP for additional information and requirements.

3.2 TESTING

A. As a minimum, the testing shall include the following:
   1. Unwitnessed Factory Tests, of PICS Sub-contractor assembled components.
   2. Witnessed Factory Acceptance Tests of PICS Sub-contractor assembled components.
   3. Operational Readiness Tests.
   4. Functional Acceptance Tests.

B. Unwitnessed Factory Tests:
   1. All components of the entire INSTRUMENTATION AND CONTROL SYSTEM shall be inspected and tested at the INSTRUMENTATION AND CONTROL SYSTEM PICS factory to ensure that it is fully operational and ready for demonstration testing.
   2. All panels, consoles, and assemblies of the INSTRUMENTATION AND CONTROL SYSTEM shall be inspected and tested to verify that they are in conformance with related submittals and these I&C Specifications.
   3. The PLC's I/O points for all control panels shall be tested to demonstrate that the control panel is fully functional. All outputs to and inputs shall be simulated.
   4. All tests shall be itemized and the results documented. Documentation shall be submitted to the Engineer for review. Prior to testing, submit the proposed test report forms to the Engineer for review. Only Engineer approved report forms will be accepted.

C. Witnessed Factory Acceptance Tests (FATs):
   1. Witnessed Factory Acceptance Tests shall be done after successful completion of the Unwitnessed Factory Tests and shall be performed in the PICS factory. The Engineer and the System Integrator shall be notified at least 4 weeks prior to the date of the Witnessed Factory Acceptance Test.
   2. All the local control panels (CTU-1000 or CTU-2000 and LCPs at each WWTP) of the INSTRUMENTATION AND CONTROL SYSTEM shall be inspected and tested to verify that they are in conformance with related submittals and these I&C Specifications.

3. The PICS Sub-contractor shall setup all PLCs TCP/IP addresses as indicated in the Section 406127, INDUSTRIAL ETHERNET NETWORK-WWTP and provide links between the control panels to perform tests of communication between the PLCs and other Ethernet equipment. The PICS Sub-contractor shall provide an operable system to confirm successful communication between CTU-1000 or CTU-2000 and LCPs at each WWTP on the Ethernet network.
4. The PLC's I/O points for all control panels shall be tested to verify that the control panel is fully functional. All PLC inputs and outputs shall be simulated.
5. All tests shall be itemized and the results documented. Documentation shall be submitted to the Engineer for review. Prior to testing submit the proposed test report forms to the Engineer for review. Only Engineer approved report forms will be accepted.

D. Operational Readiness Tests:
1. Prior to startup, the entire installed INSTRUMENTATION AND CONTROL SYSTEM shall be certified (inspected, tested, and documented) that it is ready for operation. These inspections and tests shall include Loop/Component inspections and tests and a repeat of portions of the factory tests.
2. The entire INSTRUMENTATION AND CONTROL SYSTEM shall be checked for proper installation, calibrated, and adjusted on a loop by loop basis and component by component basis to ensure that it is in conformance with related submittals and these I&C Specifications.
3. Loop/Component inspections and tests shall be implemented using Engineer approved forms and checklists.

E. Functional Acceptance Test:
1. A Witnessed, Functional Acceptance Test shall be performed on the complete system of Instrumentation and Controls.
2. Each function shall be demonstrated to the satisfaction of the Engineer on a loop-by-loop basis and component by component basis.
3. The testing program shall be conducted in accordance with proper approved procedures and shall be witnessed and signed off by both the Contractor and the Engineer upon satisfactory completion. The PICS Sub-contractor is to record all test results, and all setpoints and other calibration data on the Engineer approved forms at this time and these forms shall be included in the Operation and Maintenance Manuals.

F. Prior to the completion of the work, perform comprehensive testing of the installation. Include the following activities:
1. Wire insulation tests.
2. Wire continuity tests including associated terminations.
3. Grounding system continuity and isolation tests.
4. Any other testing necessary to verify the operation of equipment and installation work.

G. Provide the services of a manufacturer's representative for any major equipment to assist with any of the equipment tests to be performed. Any components, incorrect wiring, or systems found to be defective or deficient during the tests shall be repaired or replaced with no additional cost.

H. Coordinate test schedules with the Engineer.

I. The participation in testing activities and use of the equipment during testing periods by the Owner is to be allowed provided it does not adversely affect specified testing requirements. Such participation shall not relieve the Contractor or PICS Sub-contractor of any of the obligations stipulated herein.

J. Prior to the commencement of any testing, the Contractor and PICS Sub-contractor shall ensure that all spare parts, expendables, and test equipment pertinent to the system being tested are on site. Test equipment shall include all necessary multi-meters, process instrument calibrators for 4-20 mA, 24 VDC devices, and signal generators or simulators. Test equipment shall be provided by the Contractor or PICS Sub-contractor and shall remain the property of the Contractor or PICS Sub-contractor at the end of all testing.

3.3 CALIBRATION

A. At the site and in situ, calibrate and adjust all instrumentation to verify correct operation, range adjustment, compensation, scaling, etc. Provide instrument calibration services for all individual components such as signal transmitters, analyzers, transducers, power supplies, and like equipment where appropriate.

B. Provide certified calibration reports for each instrument. In the reports, include, but do not limit to, such information as:
   1. Device tag number.
   2. Equipment description.
   3. Service application.
   4. Process variable measurement range.
   5. Description of calibration equipment used.
   6. “As found” calibration data.
   7. “As left” calibration data.
   8. Date, name, and signature of technician.

C. Include calibration reports in the operating and maintenance manuals.

3.4 INSTALLATION VERIFICATION

A. When the system installation has been completed (or parts thereof), perform detailed verification checks for all systems supplied and installed as part of the work. In the checks and reviews, include the following:
   1. Certify that the equipment has been installed as per the Contract Drawings and recommended installation procedures, reporting any discrepancies to the Engineer.
   2. Certify that the equipment power and grounding requirements have been satisfied, reporting any discrepancies to the Engineer. For the grounding system, include an itemized check of each instrument circuit to verify the correct isolation of all shields and instrument grounds.
   3. Certify that all terminations to the equipment are properly installed. Report any discrepancies to the Engineer.
   4. Certify that all wiring continuity (whether new or existing) has been verified.
   5. Certify that all process taps and instrument connections have been performed according to the requirements detailed herein and shown on the Drawings.
   6. Certify that the installation (or parts thereof as completed) is ready for commissioning and start-up.

B. Undertake any corrective action found to be necessary during the course of the verification checkout and review.

C. Report any discoveries of defects or deficiencies in writing to the Engineer for any equipment supplied by other Divisions of these Contract Documents or by the Owner.

D. Allow for the participation of the Owner's personnel in the verification checks. Such participation shall not relieve the Contractor or PICS Sub-contractor of any of the obligations.

E. Prepare the various reports and certificates described herein. Forward three copies of each report or certificate to the Engineer. Clearly identify any discrepancies which require action on the part of the Engineer.

END OF SECTION

SECTION 406181 – PICS COMMISSIONING AND START-UP – WWTP

PART 1 - GENERAL

1.1 WORK INCLUDED

A. This section covers the provision of extensive commissioning and start-up functions for each PICS system and piece of equipment to verify the correct installation and operation of all the systems.

B. Cooperation with the Engineer and System Integrator will be required to facilitate the timely performance of these activities. The PICS Sub-contractor, together with the System Integrator, under the direction of the Engineer and the Owner, shall coordinate and schedule all activities associated with commissioning and start-up, and the Contractor shall cooperate and arrange its schedule of the work to facilitate the timely performance and completion of this work.

1.2 GENERAL REQUIREMENTS

A. Also see the GENERAL CONDITIONS, Division 01, GENERAL REQUIREMENTS, and Section 406110, PROCESS INSTRUMENTATION AND CONTROLS SYSTEM (PICS) GENERAL REQUIREMENTS-WWTP which contain information and requirements that apply to the work specified herein and are mandatory for this project. Refer to Section 406110, PROCESS INSTRUMENTATION AND CONTROLS SYSTEM (PICS) GENERAL REQUIREMENTS-WWTP for general instrumentation and control requirements related to commissioning and start-up.

B. The Contractor or the PICS Sub-contractor shall provide all required miscellaneous testing and demonstration equipment and materials, whether specified or not, as necessary to commission and start-up a complete, operable instrumentation and control (I&C) system.

C. It is the responsibility of the Contractor and the PICS Sub-contractor and the System Integrator to provide a coordinated commissioning and start-up program. The overall program shall be presented to the Owner and Engineer for approval.

PART 2 - PRODUCTS – NOT USED

PART 3 - EXECUTION

3.1 GENERAL DESCRIPTION OF WORK

A. Prior to commissioning and start-up activities, a series of operational tests will be performed by the PICS Sub-contractor, including, but not be limited to:

B. Verification of correct transmission of signals from field instruments to the receiving device (PLC I/O modules).

C. Verification of correct transmission of signals from smart overloads**,** reduced voltage starters (RVS), power monitors, communication gateways, and variable frequency drives (VFDs).

D. On completion of the installation, check all controlling inputs and controlled outputs for individual correctness prior to activation of any line equipment.

E. Subsequently, perform all equipment functional operation and interlock checks prior to activation of any line equipment (dry run check).

F. Finally, place all equipment on-line and energize for an actual controlled operation cycle.
   1. Complete any corrective actions necessary that has been identified as part of the checkout procedure, on an ongoing basis.

G. For those parts of the system that are software programmable, perform software commissioning and start-up. Determine the sequence in which the software commissioning and start-up shall occur and coordinate the performance of software commissioning and start-up with the Engineer.

H. During software commissioning and start-up, perform the manual or automatic activation of all field devices. Confirm the integrity and functional operation associated with the wiring and equipment which is required to operate with the software systems provided.

I. For software commissioning and start-up, include but do not limit to, the following activities:
   1. Complete coordination with IHS Network Communications.
   2. Process control strategy verification.
   3. SCADA screens verification down to final control drives.
   4. SCADA screens verification, including but not limited to mimics, alarms, tag scaling, trends, and reports.
   5. Annunciation system verification.
   6. Alarm dialer system verification.
   7. System operation in manual, auto, and fail mode.
   8. Systems power fail/restart testing to verify proper operation.
   9. System operation when powered by standby generators.
   10. Verification of all trip, alarm, and display functions.

J. Conduct final verification of commissioning of all systems through actual operation of the various parts of the process as determined by the Owner and the Engineer.

K. Coordinate work with representatives for the following equipment:
   1. Screening and Grit Removal System
   2. UV Disinfection System
   3. NPW System
   4. Sludge Dewatering System
   5. Odor Control System

L. The instrumentation and control system commissioning will be considered complete when, in the opinion of the Engineer, the control system hardware (or designated portion) has properly operated for seven continuous days, 24 hours per day without interruption. This 7-day period is in addition to any test periods or operational demonstrations specified elsewhere. The objective will have been achieved once it has been demonstrated that all systems are operating and have complied with the specified performance requirements herein and in all other Division 40 instrumentation and control sections.

END OF SECTION

SECTION 406182 – PICS PERSONNEL TRAINING – WWTP

PART 1 - GENERAL

1.1 WORK INCLUDED

A. This section covers the provision of maintenance and operations personnel training for the complete plant control system (PCS).

B. Cooperation with the Engineer and System Integrator will be required to facilitate the timely performance of these activities. The PICS Sub-contractor, together with the System Integrator, under the direction of the Engineer and the Owner, shall coordinate and schedule all activities associated with personnel training, and the Contractor shall cooperate and arrange its schedule of the work to facilitate the timely performance and completion of this work.

1.2 GENERAL REQUIREMENTS

A. Also see the GENERAL CONDITIONS, Division 01, GENERAL REQUIREMENTS, and Section 406110, PROCESS INSTRUMENTATION AND CONTROLS SYSTEM (PICS) GENERAL REQUIREMENTS-WWTP which contain information and requirements that apply to the work specified herein and are mandatory for this project. Also refer to individual equipment O&M manuals and manufacturer recommendations for general instrumentation and control requirements related to personnel training.

B. The Contractor or the PICS Sub-contractor shall provide all required miscellaneous training equipment and materials, whether specified or not, as necessary to complete the training of the Owner's personnel.

C. It is the responsibility of the Contractor and the PICS Sub-contractor and the System Integrator to provide a training program. The overall program shall be presented to the Owner and Engineer for approval.

PART 2 - PRODUCTS – NOT USED

PART 3 - EXECUTION

3.1 GENERAL DESCRIPTION OF WORK

A. Prepare a training plan for each category listing formal courses, including course descriptions and the duration of each course. Training shall be held at the Owner's Hospital WWTP plant site. The training plans shall also include descriptions of informal training and a duration estimate for each session. The plan shall be submitted at least 45 days prior to performance of the training.

B. Training aids which shall be utilized by any supplier/presenter, such as videos, overhead displays, wall charts, etc., and will be provided to the Owner for further use/reference. The Owner reserves the right to videotape any or all training sessions conducted at the Owner's facilities.

C. Provide training computers with demonstration software programs, etc.

D. All instructions and instructional materials, including trainees' workbooks, instructor's guides, training aids, equipment, and system manuals shall be provided by the Contractor and/or PICS Sub-contractor. Only proven accepted modern teaching techniques shall be used. Each course instructor shall be assigned full-time status and shall not perform other duties which will interrupt the instruction during the training session(s).

3.2 MAINTENANCE TRAINING

A. Provide detailed maintenance training, including software use and configuration, for the Owner's maintenance staff as to the detailed and routine maintenance of the I&C equipment as well as troubleshooting procedures. For this training, include any audio-visual training aids as well as all pertinent literature provided in a bound format for each person, as well as "hands on" training for familiarization with the equipment. The training shall include, but not be limited to: Explanation of the format and use of the O&M (Operation and Maintenance) Manual, detailed description of regular maintenance procedures, troubleshooting procedures, and safety in maintenance procedures.

B. The maintenance training shall be based on four to 6 trainees in three separate eight-hour sessions.

C. The training course shall cover all installed I&C instruments, PLCs, HMIs, OITs, PCS application, and equipment.

D. The training course shall cover, but not be limited to:
   1. Explanation of the use and format of the instrumentation and control operating and maintenance manuals.
   2. Demonstrate how to conduct daily, weekly, monthly, and yearly maintenance procedures using the Operation and Maintenance Manual. Indicate what sort of conditions should be expected and where each maintenance task is recorded on the manufacturer's scheduled maintenance log sheets.
   3. Operation, calibration, testing, and care and handling for each supplied instrument. The PICS Sub-contractor shall also:
      a. Demonstrate common problems and simple troubleshooting techniques which do not require the manufacturer's technical representative's expertise in making repairs.
      b. That components of the system should be visually inspected and what should be noted for maintenance record purposes.
      c. Basic troubleshooting procedures for all supplied instruments.
   4. Safety in maintenance procedures. A safety manual shall be provided by the PICS Sub-contractor and handed to the Owner.

3.3 OPERATOR TRAINING

A. For the detailed operator training, include, but do not necessarily restrict to, representatives from the I&C equipment suppliers who shall provide on-site training for the function and operation of the equipment.

B. For this training, include audio-visual training aids as well as all pertinent literature provided in a bound format for each operator.

C. The operator training shall be based on four to 6 trainees in three separate sessions for eight hour sessions.

END OF SECTION

SECTION 406191 – PICS SPARE PARTS – WWTP

PART 1 - GENERAL

1.1 WORK INCLUDED

A. This section covers the provision of spare parts for the instrumentation and control equipment.

1.2 GENERAL REQUIREMENTS

A. Also see the GENERAL CONDITIONS, Division 01, GENERAL REQUIREMENTS, and Section 406110, PROCESS INSTRUMENTATION AND CONTROLS SYSTEM (PICS) GENERAL REQUIREMENTS-WWTP which contain information and requirements that apply to the work specified herein and are mandatory for this project.

PART 2 - PRODUCTS

2.1 GENERAL

A. All provided spare parts equipment and materials shall be rated for industrial use.

2.2 EQUIPMENT SPARE PARTS

A. Provide the following equipment for spare parts:

Description	Quantity
CPU	1
Digital Input Card	1
Relay Output Card	1
Analog Input Card	1
Analog Output Card	1
Ethernet Bridge	1
Power Supply	1
24VDC 10A Power Supply	1
Managed Ethernet Switch	1
Unmanaged Ethernet Switch	1

B. In addition to the spare parts listed above, provide 5 percent spare inventory for each type of consumable such as fuses, lamps, bulbs, etc.

PART 3 - EXECUTION

3.1 SPARE PARTS

A. Provide all spare parts as indicated in Part 2, PRODUCTS. Each spare part shall be packaged and labelled for storage, and delivered to the Owner at the Owner's designated storage area.

B. Spare parts for package supplied equipment systems are not included in the table above and are subject to the related Specification sections in other divisions.

END OF SECTION

SECTION 412213.17 – DAVIT AND GANTRY CRANES – WWTP

PART 1 - GENERAL

1.1 WORK INCLUDED

A. This section covers the work necessary to furnish and install, complete, davit and gantry crane systems including hoists and winches, for the sewer lift stations and Hospital and Hon-Dah WWTPs.

B. All equipment shall be compliant with Federal Acquisition Register the clause 52.225-11, Buy American-Construction Materials under Trade Agreements (Nov 2023) and provision 52.225-12, Notice of Buy American Requirement-Construction Materials under Trade Agreements (May 2014)..

1.2 GENERAL

A. See GENERAL CONDITIONS and Division 01, GENERAL REQUIREMENTS, which contain information and requirements that apply to the work specified herein and are mandatory for this project.

1.3 QUALITY ASSURANCE

A. All equipment covered herein shall be furnished by one Manufacturer and shall include all necessary appurtenances for a complete and working system. The equipment shall be the product of a single Manufacturer regularly engaged in the production of equipment for the specified use. The Manufacturer shall have the sole responsibility for the proper functioning and coordination of the equipment as furnished.

B. The Manufacturer shall have a minimum of 5 years of experience in the manufacture of lightweight, portable davit and gantry cranes.

1.4 SUBMITTALS

A. Submittals shall be made as required in Section 013300, SUBMITTAL PROCEDURES in Division 01, GENERAL CONDITIONS. At a minimum, the following specific information shall be provided:
   1. Shop drawings including sufficient detail to show the general construction and materials pertinent to the proper review of the equipment.
      a. Details of vertical, diagonal and horizontal members
      b. Details for hoists, winches, and trolleys
      c. Details of electrical motors where specified
      d. Details for all Manufacturer supplied accessories and appurtenances
   2. A precise list of all electrical requirements for the equipment including all controls, monitoring equipment and instrumentation shall be given including all power characteristics and materials of construction
   3. List of Manufacturer supplied spare parts
   4. List of special accessories or tools for the adjustment or removal of parts required for any piece of equipment to be furnished by the Manufacturer

1.5 OPERATION AND MAINTENANCE MANUALS

A. Operation and Maintenance Manuals and Equipment Maintenance Summary Sheets for the equipment specified herein shall be furnished as specified in Section 017823, OPERATION AND MAINTENANCE DATA.

1.6 MANUFACTURER SERVICES

A. Manufacturer's services shall be provided in accordance with Section 019113, GENERAL COMMISSIONING REQUIREMENTS.

1.7 WARRANTY

A. Davit and gantry cranes: The Manufacturer shall provide a 10 (ten) year parts and labor warranty on all davit, gantry, and socket components against defects in workmanship and materials from the date of Substantial Completion. All components shall be fully tested prior to shipping.

B. Hoists and Winches: The Manufacturer shall warrant all components of the hoists and winches against defects in workmanship and materials for 2 years from the date of Substantial Completion.

PART 2 - PRODUCTS

2.1 GENERAL

A. The use of a manufacturer's name and model or catalog number is for the purpose of establishing the Basis of Design and general configuration. Products of other manufacturers will be considered in accordance with the General Conditions. The Contractor shall be responsible for all design changes associated with other Manufacturers' equipment and shall bear all costs for necessary changes for a complete and satisfactory installation.

B. All lifting systems shall be capable of overcoming the initial dislodging force, overcoming friction including equipment and lifting chain weight with a safety factor of 2.0, minimum.

C. Portable davit and gantry cranes and hoists shall be manufactured from materials that are compatible and will operate safely in the specified conditions.

2.2 DAVIT CRANES

A. Manufacturers
   1. Thern Winches & Cranes
   2. Or approved equal.

B. Scope of Supply
   1. Supply one (1) lightweight, portable davit crane for the Hospital WWTP as follows:
      a. Aluminum crane, Thern Commander 650-5AT1-M2X or equal.
      b. Minimum 300 lb. lifting capacity
      c. 44 inches minimum available lifting height.
      d. Minimum 40 inches boom extension from center of base to lifting point.
      e. Provide two (2) pedestal bases and two (2) base extensions as specified below.
      f. Provide one (1) drill operated winch, Thern 4WM2EGRA-K or equal, as specified below.
      g. Provide two (2) stainless steel cables as specified below.
      h. Provide one (1) drill as specified below.
   2. Supply one (1) lightweight, portable davit crane for the Hon-Dah WWTP and Hon-Dah lift station as follows:
      a. Aluminum crane, Thern Commander 650-5AT1-M2X or equal.
      b. Minimum 340 lb. lifting capacity

c. 44 inches minimum available lifting height.
d. Minimum 46 inches boom extension from center of base to lifting point
e. Provide three (3) pedestal bases and three (3) extensions as specified below.
f. Provide one (1) drill operated winch, Thern 4WM2EGRA-K or equal, as specified below.
g. Provide two (2) stainless steel cables as specified below.
h. Provide one (1) drill as specified below.

3. Supply one (1) portable davit crane for the Hospital Sewer Lift Station as follows:
   a. Welded steel crane, Thern Commander 2000 – 5PT20X-E2X or equal.
   b. Minimum 1,300 lb. lifting capacity
   c. 45 inches minimum lifting height.
   d. Minimum 46 inches boom extension from center of base to lifting point
   e. Provide one (1) pedestal base and extension as specified below.
   f. Provide one (1) electric winch as specified below, Thern 4WP2EGRA-K or equal.
   g. Provide one (1) stainless steel cable as specified below.

C. Aluminum Cranes:
1. Crane shall be portable and light-weight. Crane shall fold for convenient storage and portability.
2. Crane shall use quick release hardware and pins for assembly and disassembly.
3. Crane shall have telescoping boom and seven radius adjustment increments.
4. Crane materials shall be welded 6061-T6 aluminum alloy pipe and tubing.
5. All metal surfaces shall be powder coated.
6. All fasteners shall be Type 316 stainless steel.
7. Provide weather-proof decals clearly indicating crane capacity.
8. Pedestal base shall be compatible with specified crane and shall be top mount or side mount as shown on the Drawings. Base shall be constructed of powder coated 6061-T6 aluminum. Bushing shall be made of Nylatron ® and be rated for crane capacity and provide long lasting smooth operation. Base cap shall be attached to base with a lanyard and shall fit tightly onto the base tube. Base tube shall have a drain to prevent water from pooling within the base. Base shall be provided with a 15-inch extension and an anchor kit compatible with the base.
9. Winches shall be rated for the same capacity as the crane or higher and shall be equipped with an automatic internal load break. Drill operated winches shall be of powder coated steel construction and use totally enclosed worm gears. Input shaft shall allow for a drill drive up to 400 rpm with a 1 1/8-inch hex socket. Winch shall allow for quick disconnect of cable while leaving the cable attached to the load.

D. Steel Cranes:
1. Crane shall be portable. Crane shall fold for convenient storage and portability.
2. Crane shall use quick release hardware and pins for assembly and disassembly.
3. Crane shall have telescoping boom.
4. Crane materials shall be heavy duty welded steel pipe and tubing.
5. All metal surfaces shall be powder coated to resist corrosion.
6. Fasteners shall be Type 316 stainless steel.
7. Provide weather proof decals clearly indicating crane capacity.

8. Pedestal base shall be constructed of powder coated mild steel and be side mounted type as shown on the Drawings. Bushing shall be made of Nylatron ® and be rated for crane capacity and provide long lasting smooth operation. Base cap shall be attached to base with a lanyard and shall fit tightly onto the base tube. Base tube shall have a drain to prevent water from pooling within the base. Base shall be provided with a 15-inch extension and an anchor kit compatible with the base.
9. Winches shall be electric rated for the same capacity as the crane or higher and shall be equipped with an automatic internal load break. Motor shall be 1.3 hp TENV, 115V, 1-ph, 60Hz. Winch shall allow for quick disconnect of cable while leaving the cable attached to the load.

E. Cables:
1. Cables shall be ¼-inch diameter 7x19 aircraft cable, Type 304 SST, 25 feet long, with swage ball on one end and Type 316 SST swivel hook with safety latch on other end.

2.3 GANTRY CRANE

A. Supply one (1) lightweight gantry crane to the Hospital WWTP and one (1) crane to the Hon-Dah WWTP as follows:
1. Corrosion-resistant, all aluminum alloy construction.
2. Crane shall be easily disassembled for moving and storage.
3. Capacity with winch 1,100 pounds; capacity with chain hoist 2,200 lbs.
4. Adjustable span and support leg height.
5. Wheel base width: min. 5 ft
6. Clearance to the lifting ring: min. 5.5 ft
7. Extruded hollow aluminum alloy box beam
8. Provide a dual purpose beam trolley that can receive the equipment lifting cable and be locked securely during all operations
9. Total assembled weight shall be less than 200 pounds.
10. The gantry crane shall be supplied with locking casters to eliminate spin and roll.
11. Fittings:
    a. Provide all fittings. Include all structural aluminum hangers, braces and all connection hardware.
    b. Provide adequately sized fabricated fittings for the indicated loads and factors of safety.
    c. Provide proper bracing to prevent movement of rail beam during operation.
12. Safety stops and bumpers: Fit open ends of the crane beam with safety stops or bumpers to prevent trolley from running off the ends.
13. Bolts, Nuts, and Clamps: All bolts, nuts, and fasteners shall be type L9.
14. Provide weatherproof decals clearly indicating crane capacity, as specified herein.

B. Electric Chain Hoist
1. Hoists shall be hook-mounted, single-speed, electric chain type, Harrington Model NER030C, R&M LM05 or approved equal.
2. Performance Criteria:
    a. Capacity: Equal to gantry crane capacity
    b. Location: Outside
    c. Main Power Supply: 120 VAC, 60 Hz, 1 ph
    d. Maximum Lift: 15 ft

3. The hoisting machinery for the electrical chain hoist shall consist of a load sheave, driven through suitable gear reductions, by a TEFC motor, chain, hook, and hoist braking.
4. Provide Manufacturer supplied power supply cord with minimum 50 ft length.
5. Load chain shall be alloy steel, close link coil type. Load sheaves shall be formed to fit the links of the link chain without jamming.
6. Hoist shall be supplied with a load brake. The load brake shall consist of a positive-action, Weston type brake, with uniform composition lining and forged alloy latch pawl.
7. Chain hoist shall have chain storage adequate for storing the full lift of chain and shall be designed and located to avoid chain interference while hoisting.
8. Hoist control shall be by a push-button pendant. Pendant and cord shall be designed for outdoor use and storage.
9. Hooks shall have sufficient ductility to open noticeably before hook failure as a result of abuse or overload. The load hook shall be equipped with safety latch and shall be free to rotate 360 degrees with rated load, and shall be positively held in place with locknuts, collars, or other suitable devices.

C. Drill Operated Winches
1. Provide one (1) removable, quick release winch for each gantry crane, Thern Model 4WM2EGRA-K worm gear or approved equal. Winches should be of the same make as those supplied for the gantry cranes.
2. Winch capacity shall be equal to or greater to the crane capacity.
3. The worm gear winch shall be drill operated and shall accept the equipment lifting cable with a quick disconnect anchor.

2.4 CORDLESS DRILL FOR WINCH OPERATION:

A. Cordless Electric Drill: Provide heavy-duty cordless drills, one each to the Hospital WWTP and the Hon-Dah WWTP. The drills shall be complete with overload release clutch set to 50 foot-pounds of torque, charging kit, battery, and adapting chuck suitable for operating all winches furnished under this section. The drill shall be capable of delivering a minimum of 50 foot-pounds of torque and shall maintain a minimum speed of 60 rpm under full load conditions. Motor shall be suitable for 15-minute operation under full load when rested for the same period of time between operations. The cordless drill shall be Milwaukee, DeWalt, or equal.

PART 3 - EXECUTION

3.1 SHIPMENT, AND STORAGE

A. Package and handle equipment during shipment and storage in accordance with Section 016000, PRODUCT REQUIREMENTS.

3.2 ASSEMBLY

A. Assemble cranes and hoists according to Manufacturer’s instructions.

3.3 FIELD TEST

A. The Contractor shall conduct field tests with the equipment in its installed position. Tests shall include a load test for each crane in compliance with OSHA requirements and demonstration to the Engineer that under this load condition the equipment will perform satisfactorily throughout the complete range of operation.

3.4 MANUFACTURER'S CERTIFICATE(S)

A. Provide manufacturer's certificate(s) in accordance with Section 019113, GENERAL COMMISSIONING REQUIREMENTS.

END OF SECTION

SECTION 413313 – OVERHEAD TRAVELING CRANES – WWTP

PART 1 - GENERAL

1.1 WORK INCLUDED

A. This section covers the work necessary to furnish and install, complete, the overhead traveling cranes specified herein and as further specified in the Detail Specifications hereinafter.

1.2 GENERAL

A. Like items of equipment provided hereunder and in the Detail Specifications hereinafter shall be the end products of one manufacturer and shall include all necessary appurtenances for a complete and working system. The equipment shall be the product of a manufacturer regularly engaged in the production of equipment for the specified use. The manufacturer shall have the sole responsibility for the proper functioning and coordination of the equipment as furnished.

B. The manufacturer shall have a minimum of 5 years of experience in the manufacture of overhead traveling bridge cranes.

C. See the GENERAL CONDITIONS and Division 01, GENERAL REQUIREMENTS, which contain information and requirements that apply to the work specified herein and are mandatory for this project

D. All equipment shall be compliant with Federal Acquisition Register the clause 52.225-11, Buy American-Construction Materials under Trade Agreements (Nov 2023) and provision 52.225-12, Notice of Buy American Requirement-Construction Materials under Trade Agreements (May 2014).

1.3 MANUFACTURER'S SERVICES

A. If stated in the Detail Bridge Crane Specification, a manufacturer's representative for the equipment specified shall be present at the jobsite for installation assistance, inspection and certification of the installation, equipment testing, startup assistance, and training of Owner's personnel.

1.4 SUBMITTALS DURING CONSTRUCTION

A. Submittals shall be made as required in Section 013300, SUBMITTAL PROCEDURES in Division 01, GENERAL REQUIREMENTS. At a minimum, the following specific information shall be provided:
   1. Shop drawings including sufficient detail to show the general construction and materials pertinent to the proper review of the equipment.
      a. Details for bridge cranes.
      b. Electrical diagrams and details.
      c. Details for all manufacturer supplied accessories and appurtenances.
   2. List of special accessories or tools for the adjustment or removal of parts required for any piece of equipment to be furnished by the manufacturer.

1.5 STANDARDS, SPECIFICATIONS, AND CODES

A. All overhead traveling cranes shall conform to applicable portions of the latest edition of the ASME International B30.2, Overhead and Gantry Cranes (Top Running Bridge, Single or Multiple Girder, Top Running Trolley Hoist); ASME B30.11, Monorails and Underhung Cranes; latest edition of Crane Manufacturers' Association of America

(CMAA) Specification No. 70, Specifications for Top Running Bridge and Gantry Type Multiple Girder Electric Overhead Traveling Cranes and CMAA 74, Specifications for Top Running and Under Running Single Girder Electric Overhead Cranes Utilizing Under Running Trolley Hoist, except as specified herein and in the Detail Specifications and Crane Data Sheets following. CMAA Specifications hereinafter shall mean CMAA Specification No. 70 or 74 as it applies to type and service class of crane specified in the Detail Specifications following.

B. All multiple girder cranes shall be designed for service as Class A, B, C, D, E, or F as described in CMAA Specification No. 70 and specified in the Detail Specifications hereinafter. All single girder cranes shall be designed for service as Class A, B, C, or D as described in CMAA Specification No. 74 and specified in the Detail Specifications hereinafter.

C. All trolleys shall be designed for service as Class A, B, C, D, E, or F, as described in CMAA Specification No. 70 or No. 74 Specifications and specified in the Detail Specifications hereinafter.

D. All hoists incorporated into bridge crane systems shall conform to the applicable Hoist Manufacturers' Institute (HMI) Specifications; ASME International HST-2, Performance Standard for Hand Chain Manually Operated Chain Hoists; and ASME International HST-4, Performance Standard for Overhead Electric Wire Rope Hoists; for the hoist type and service class specified, except as modified herein. All hoists shall be designed for service as Class H1, H2, H3, H4, or H5 as specified in the Detail Specifications hereinafter.

E. All electrical components shall be furnished in accordance with the applicable requirements of the National Electrical Code (NEC), state and local regulations, standards of the National Electrical Manufacturer's Association (NEMA), and applicable portions of Division 26, ELECTRICAL.

1.6 OPERATION AND MAINTENANCE MANUALS

A. Operation and Maintenance Manuals and Equipment Maintenance Summary Sheets for the equipment specified herein shall be furnished as specified in Section 017700, CLOSEOUT PROCEDURES.

1.7 WARRANTY

A. The manufacturer shall warrant all components of the bridge crane, trolleys, and hoists against defects in workmanship and materials for 1 year from the date of Substantial Completion.

PART 2 - PRODUCTS

2.1 GENERAL

A. The use of the manufacturer's name and model or catalog number is for establishing the standard of quality and general configuration desired only. Products of other manufacturer's equipment will be considered in accordance with the General Conditions.

B. The structure and appurtenant facilities have been designed around the first named manufacturer's equipment. Equipment furnished by all qualified interested manufacturers will be considered, provided that necessary structural, electrical, and mechanical changes required are submitted in conformance with the requirements of the GENERAL CONDITIONS and Division 01, GENERAL REQUIREMENTS. The Contractor shall bear all costs for necessary changes for a complete and satisfactory installation.

C. All crane equipment shall be designed to occupy the space provided, as shown on the Drawings and the Detail Data Sheets following each Detail Specification. All dimensions shall be verified on the site. Provide materials and equipment which are standard products of a manufacturer regularly engaged in the fabrication of complete and totally functional bridge crane systems, including necessary ancillary equipment and controls.

D. All building clearances shall be as specified in CMAA Specifications. Where bridge span exceeds 40 feet, the clearance shall be increased to 3 inches (minimum).

E. Runway beams, girders, brackets, and associated framework shall be furnished by the crane manufacturer and installed in accordance with Section 051200, STRUCTURAL STEEL FRAMING. Design and fabrication shall be in accordance with American Institute of Steel Construction (AISC) 325, Steel Construction Manual and AISC 360, Specification for Structural Steel Buildings. Minimum structural loading shall be the specified live load capacity; plus 20 percent for crane, trolley and hoist weight; plus 25 percent for impact. Maximum track deflection shall be 1/800 of span, or 1-inch, whichever is less. Maximum rail separation at joints shall be 1/16-inch.

F. Runway beams, girders, and rails shall be ASTM A36 structural steel and standard I-beams or wide flange beams, and shall conform to the cross sections and weights per foot specified in ASCE, ASTM, and AISC Standards. Specific service ratings shall be as shown on the Drawings or as recommended by the manufacturer. Runway beams, girders, rails, crane stops, and conductors shall be provided by the crane manufacturer.

G. All materials shall be properly selected for the stresses to which they will be subjected. Design stresses and safety factors shall be in accordance with ASME B30.2, ASME B30.11, and CMAA Specifications.

H. All apparatus covered by this specification and the Detail Specifications shall be constructed with due regard to safety of operation, accessibility, interchangeability, durability of parts, and shall conform to the ASME B30.2 and/or ASME B30.11 safety code and all applicable OSHA regulations.

2.2 BRIDGE SPECIFICATIONS

A. The bridge crane girders shall be fabricated from structural shapes and shall be designed and proportioned to resist all vertical, lateral, and torsional forces. The design shall be completed by the manufacturer and approved by the Engineer.

B. The bridge end trucks shall be designed in accordance with ASME and CMAA Specifications. End trucks shall be provided with rail sweeps and impact absorbing bumpers or other automatic means providing equivalent stopping effect, all in compliance with applicable OSHA regulations.

C. Runway stops shall be attached to resist the force applied when contacted and shall be located at the limits of travel of the bridge. Runway stops shall not engage the wheel.

D. Wheels shall be rolled or forged steel with treads and flanges heat treated, or cast iron wheels with chilled tread, and hardened. Wheels shall have a minimum tread hardness of 425 Brinell. All clearances, wheel loads, and manufacturing tolerances shall be in accordance with CMAA Specifications. Wheel axles shall be made of alloy steel, accurately machined and ground to receive inner bearing races. Rotating axles shall be used and wheels shall be mounted on axles with a press fit and keys.

E. Bridge driving machinery shall consist of a cross shaft, driven by an electric motor through a gear speed reducer unit mounted near the midspan of the bridge or by a manual chain wheel operator, as specified further in the Detail Specifications. The cross shaft shall be made from high-grade turned, ground, and polished steel shafting and shall be of sufficient diameter to resist all torsional strains when the bridge is traveling under full load, or when it is suddenly stopped. The cross shaft shall be supported along with the bridge with self-aligning bearings. The motor speed reducer gear case shall be of oil-tight construction and supported on a common base with the bridge break.

F. Spur gear reduction shall be made through a cross-shaft mounted, heat treated alloy steel pinion meshing with a spur gear integral with the truck drive wheel.

G. Chain driven bridges shall consist of a chain sprocket linked to the cross shaft. The chain sprocket shall be designed to accept the chain and shall attach to the bridge in such a manner that the driving chain does not interfere with normal hoist operation. The driving chain loop height shall be between 4 and 5 feet above the operating floor level.

H. All gears shall be of the helical, spur, or herringbone type, made from rolled or cast steel, with machine cut teeth. All horsepower ratings shall be in accordance with AGMA Standards, as described in CMAA Specifications.

I. Bearings shall be combination radial and thrust type, double-row, spherical ball bearings, pre-lubricated and factory sealed. Minimum ABMA L-10 life shall be 5,000 hours.

J. Bridge brakes shall be electrically operated, adjustable, suitable for the service class indicated, and shall have rated torque capacities as specified in the CMAA Specifications.

2.3 TROLLEY SPECIFICATIONS

A. The trolley frame shall be welded steel, cast steel, or ductile iron construction or a combination thereof. It shall be of rigid construction, so that the load is transmitted to the running surface without undue deflection. Provision shall be made to prevent a drop of more than 1-inch in case of axle failure.

B. The trolley drive system shall be hand-geared or electric motor driven as indicated in the Detail Specifications.

C. The trolley drive shall consist of a trolley drive shaft, driven either by an electric motor through a gear reduction unit or a chain sprocket mounted on the shaft, with operating parts totally enclosed. The chain sprocket shall accept the chain and attach to the trolley without interference to the trolley operation. Driving chain loop height shall be between 4 feet and 5 feet above the operating floor level. The trolley drive shaft shall drive the trolley wheels either directly through a gear and pinion or spur arrangement or through an additional gear reduction between the motor and trolley drive shaft.

D. Single girder trolley units shall have a stabilizing roller assembly provided to prevent tipping during load pickup.

E. Wheels shall be rolled or forged steel with treads and flanges heat-treated, or cast iron wheels with chilled tread, and hardened. Wheels shall have a minimum tread hardness of 425 Brinell. All clearances, wheel loads, and manufacturers' tolerances shall be in accordance with CMAA Specifications. Wheels shall be removable without removing the trolley from the track. The minimum number of wheels shall be four for trolleys with a capacity of two tons or less, or six for trolleys with a capacity greater than two tons.

F. Wheel axles shall be made of alloy steel, accurately machined and ground to receive inner bearing races. When rotating axles are used, wheels shall be mounted on axles with a press fit and keys, or with keys alone.

G. All gears shall be of the helical, spur, or herringbone type, made from rolled or cast steel, with machine cut teeth. All internal gears shall be enclosed in an oil-tight housing for motor driven units. All horsepower ratings shall be in accordance with AGMA Standards, as described in CMAA Specifications.

H. Bearings shall be combination radial and thrust type, double-row, angular contact ball bearings, or single-row tapered roller bearings, factory pre-lubricated and sealed, requiring no additional lubrication. Minimum ABMA L-10 bearing life shall be 5,000 hours based on 75 percent of the wheel load, excluding impact.

I. Trolley brakes shall be suitable for the service class indicated and shall have rated torque capacities as specified in CMAA Specifications. Stops shall be provided for the trolleys. Electric trolley brakes shall be magnetic release disc type integrally mounted to the motor. Manual trolley brakes shall be mechanical type.

J. All trolleys shall be completely compatible with their associated hoists and bridge cranes.

2.4 HOIST SPECIFICATION

A. Hoists shall be electric, wire rope type or hand-operated chain type, as specified in the Detail Specifications. Hoists shall be standard headroom models with frames of welded heavy steel plate construction and sealed construction oil-tight gear casing for lifetime oil bath lubrication of gears.

B. Electric hoisting machinery shall consist of a rope drum, driven through suitable gear reductions by an electric motor operator, load blocks, hooks, hoisting rope, sheaves, and hoist braking. The drum shall be of sufficient size and length so at least two turns of the hoisting cable remain on the drum with the hook in its low position.

1. The rope drum and its surrounding members shall be constructed to minimize abrasion, crushing or jamming of the hoist rope. The load blocks shall be of the enclosed type and shall guard against jamming. Hoisting rope shall be extra flexible, improved plow steel wire rope made especially for hoist service. Drum diameter shall not be less than 18 times the diameter of the rope used.
2. The hoist shall be supplied with both an electric load brake control and a mechanical load brake. Both brakes shall be designed per HMI Specifications and shall have provisions for adjustments to compensate for wear. Electric brake shall be rated for 150 percent of motor torque and both brakes shall be rated for at least 125 percent of the hoist's rated load capacity. The mechanical load brake shall consist of a positive action, Weston type brake, with uniform composition lining and forged alloy latch pawl.

3. Bearings shall be anti-friction type with a minimum ABMA L-10 bearing life of 1250 hours for Class H1, 2500 hours for Class H2, and 5000 hours for Class H3 hoists, based on full rated speed and mean effective load K of 0.65.

C. Hooks shall have sufficient ductility to open noticeably before hook failure as a result of abuse or overload. The load hook shall be equipped with safety latch and shall be free to rotate 360 degrees with rated load, and shall be positively held in place with locknuts, collars, or other suitable devices.

D. Hand-operated chain hoisting machinery shall consist of a load chain wheel, driven through suitable gear reductions, by a hand chain wheel, load blocks, sheaves, chain, hooks, and hoist braking.
   1. Load chain shall be alloy steel, close link coil type. Load and idler sheaves shall be formed to fit the links of the link chain without jamming. Hand chain wheels shall have deep pockets shaped for reception of the hand chain. The hand wheel shall have a chain guard that prevents the chain from slipping or jumping the wheel rim.
   2. Hoist shall be supplied with an automatic mechanical load brake which will prevent lowering of the load unless manual power is applied to the hand chain. The load brake shall consist of a positive-action, Weston type brake, with uniform composition lining and forged alloy latch pawl, rated for at least 125 percent of the hoist's rated load capacity.
   3. Chain hoists shall have chain storage adequate for storing the full lift of chain and shall be designed and located to avoid chain interference while hoisting.

2.5 ELECTRICAL EQUIPMENT

A. Where applicable, as specified in the Detail Specifications, the crane manufacturer shall furnish and assemble all electrical equipment on the crane including motors, motor starters, disconnect switch, pendant control, magnetic reducing contactors, low voltage transformers, conduit, and other similar items. Bridge conductors may be removed for shipment. All wire on the crane shall be furnished by the crane manufacturer, cut to length and installed, as far as practical for shipment. All horsepower ratings shall be in accordance with AGMA standards.

B. The electrical equipment shall be furnished in accordance with the applicable requirements of Article 610 of the latest issue of the National Electrical Code and the installation and wiring shall be made in accordance with Division 26, ELECTRICAL.

C. Motors shall be squirrel-cage type built in accordance with NEMA Standards, rated on not less than a 30 minute basis, with temperature rise in accordance with the latest NEMA Standards for the class of insulation and enclosure used, and shall be provided with antifriction bearings that are permanently lubricated and sealed. Squirrel-cage motors shall be Totally Enclosed Non-Ventilated (TENV) or Totally Enclosed Fan Cooled (TEFC) NEMA Design D, with high starting torque, low starting current and high slip at full load. Overload relays shall be provided in all phases of polyphase alternating current motors. Minimum motor horsepowers shall be as specified in the Detail Specifications. Motors shall meet specified area classification, as shown on the Drawings or as specified in the Detail Specifications.

D. If specified in the Detail Specifications, bridge conductors and/or trolley conductors shall be of the Enclosed Bus Bar type, as hereinafter specified. The bridge and trolley conductor voltage drops from the runway supply taps shall permit the crane motors to operate within voltage tolerances of plus or minus 10 percent when building system is at plus or minus 5 percent of design voltage.

E. Enclosed bus bar conductors shall consist of stainless steel clad hard copper in the form of stiff shapes, and enclosed in a suitable insulation material. The collector shall be of the sliding noncopper bearings, carbon shoe type with adjustable spring-tension arms providing contact between the bus bar and the controls. Collector mechanism components shall be aluminum, stainless steel, plastic, or other noncorrosive materials. Provide 20 percent spare conductors in each cable assembly. Construction shall be non-sparking. Provide with plastic wheels in areas with an NEC classification of Class I, Division 1 or 2, Group D.

F. If specified in the Detail Specifications, bridge conductors and/or trolley conductors shall be of the Festooned Cable type, as hereinafter specified. The bridge and trolley conductor voltage drops from the monorail track supply taps shall permit the hoist and trolley motors to operate within voltage tolerances of plus or minus 10 percent when building system is at plus or minus 5 percent of design voltage.

G. Festooned flat cable conductors shall consist of flexible neoprene jacketed multi-conductor flat cables with separate control and power conductors, supported by a heavy-duty roller, permanently lubricated bearing, monorail system that will dispense and retrieve the flexible conductor cable during trolley travel without twisting or tangling. Provide 20 percent spare conductors in each cable assembly and length of 110 percent of required length. Construction shall be non-sparking. Provide with plastic wheels in areas with an NEC classification of Class I, Division 1 or 2, Group D.

H. Grounding on the equipment and provisions for grounding the equipment to external grounding systems shall be in accordance with the requirements of the NEC and state and local regulations.

I. Electric cranes shall be equipped with a pendant control having momentary contact pushbuttons, and shall be provided with a device which will disconnect all motors from the line on failure of power and will not permit any motor to be restarted until the controller handle is brought to the OFF position, or a reset switch or button is operated. Undervoltage, phase failure, and phase unbalance protection shall be provided as a function of each motor controller, or by a magnetic main line contactor.

J. Controls shall be fully magnetic of the plain reversing type, housed in a NEMA Type 4 lexan resin enclosure, except for special environmental conditions as hereinafter specified in the Detail Specifications, and complying with NEMA ICS 8, Application Guide for Industrial Control and Systems Crane and Hoist Controllers. Each magnetic control shall have contactors of sufficient size and quantity for starting, accelerating, reversing and stopping duty for the specified crane service class.

K. Bridge and trolley drives shall have soft start controls, as required by the Detail Specifications. Soft start motor control shall be a 460/230-volt ac series device, installed in between the drive motor and motor starter. Torque and acceleration rate shall be adjustable on the unit and shall work in conjunction with crane control pendant systems. Unit shall be suitable for bridge and/or trolley drive service.

L. Provide control transformers to supply 120 volts ac for all controls including the pushbutton control stations. The pushbutton control stations shall be of heavy-duty, oil-tight construction and suspended from the trolley or bridge, as hereinafter specified in the Detail Specifications. The pushbutton enclosure shall be supported with chain or wire rope. The control wire cable shall be attached to the enclosure support at not more than 6-foot intervals. The control station shall contain pushbuttons for control of the crane, hoist, and trolley and an ON/OFF switch to operate a main line contactor which shall remove all power from the control station. Pushbuttons shall be clearly marked for function. Unless shown otherwise, pendant station shall hang at a level 4 feet above operating floor.

2.6 ACCESSORIES

A. Equipment Identification Plates: A 16-gauge stainless steel identification plate shall be securely mounted on the equipment in a readily visible location. The plate shall bear the ¼-inch die-stamped equipment identification number indicated in the specification and/or shown on the Drawings. The equipment identification number shall be mounted on each of the separate components of the equipment to facilitate assembly in the field.

B. Lifting Lugs: Equipment weighing over 100 pounds shall be provided with lifting lugs.

C. Provide all required OSHA operating and safety devices.

PART 3 - EXECUTION

3.1 PREPARATION FOR SHIPMENT, SHIPMENT, AND PROTECTION

A. Equipment shall be prepared and protected for shipment and shipped in accordance with the requirements of Section 016000, PRODUCT REQUIRMENTS of Division 01, GENERAL REQUIREMENTS. In addition, the following shall be done:

1. After testing and before dismantling for shipment, all wiring and mechanical connections shall be matchmarked or tagged to ensure proper field assembly.
2. The Contractor shall make arrangements for extra protection until final erection if units are to be stored outside.

3.2 EQUIPMENT INSTALLATION

A. Crane erection, including crane rail installation, crane assembly, field wiring, installation, and starting shall be in accordance with the manufacturer's printed instructions. If stated in the Detail Specifications, the Contractor shall secure the services of the crane manufacturer's field engineer to advise on field assembly and installation.

B. The crane shall be provided with all necessary factory lubrication. Before initial startup at final installation, all lubrication for bearings, gears, etc. shall be checked in accordance with the manufacturer's recommendations.

3.3 PAINTING

A. Exposed metal surfaces of equipment and accessories specified herein shall be shop primed. Preparation of metal surface and application of primer shall be as specified and in accordance with Section 099600, HIGH-PERFORMANCE COATINGS-WWTP.

B. Final field painting shall be per Section 099600, HIGH-PERFORMANCE COATINGS. The type of primer shall be coordinated with the final paint system. All factory painted equipment shall have documentation provided on the equipment concerning the paint applied, coating thickness, product name, and date of coating application.

3.4 FACTORY TESTS

A. The crane(s) shall be assembled, wired completely, and given no-load running tests at the manufacturer's plant before shipment. Running tests shall be performed with the control that will operate the crane in service.

3.5 FIELD TESTS

A. The Contractor shall have crane equipment manufacturer conduct field tests with the equipment in its installed position. Tests shall include a load test in compliance with OSHA requirements and demonstration to the Engineer that under this load condition the equipment will perform satisfactorily throughout the complete range of operation. OSHA deflection criteria shall be satisfied for the crane support system, but shall not include secondary deflection from open web steel joist roof framing.

3.6 MANUFACTURER'S CERTIFICATES

A. Provide manufacturer's certificate(s) in accordance with Section 019113, GENERAL COMMISSIONING REQUIREMENTS of Division 01, GENERAL REQUIREMENTS.

END OF SECTION
(See Detail Specification(s) Hereinafter)

SECTION 413313.01 – DETAIL SPECIFICATION – TREATMENT PLANT BRIDGE CRANE – WWTP

PART 2 - GENERAL

2.1 GENERAL

A. See Section 413313, OVERHEAD TRAVELING CRANES – GENERAL-WWTP for additional requirements.

2.2 OVERHEAD TRAVELING CRANE SYSTEM MANUFACTURERS

A. OVERHEAD TRAVELING CRANE SYSTEM MANUFACTURERS
1. Crane Sales & Service
2. ACCO Material Handling Solutions.
3. Harrington Hoists.
4. Yale Hoist.
5. Saturn Overhead Equipment.
6. R&M Materials Handling.
7. Or equal.

2.3 QUANTITY

A. ONE.

2.4 DESIGN REQUIREMENTS

A.	Equipment Capacity	Five tons
B.	Equipment Location	Indoors
C.	Main Power Supply	460 volts ac, 3-phase, 60-HZ

2.5 BRIDGE CRANE

A.	Type	Motor-driven
B.	Style	Double girder, top-running
C.	Service Class	Minimum Class C per CMMA Specifications
D.	Speed	100 feet per minute (fpm) maximum, single speed
E.	Motor	9.6 horsepower, minimum
F.	Electric Conductors	Enclosed bus bar or Festooned tag line
G.	Method and Location	Pendant, at Trolley

2.6 TROLLEY

A.	Type	Motor-driven
B.	Service Class	Minimum Class C per CMMA Specifications
C.	Speed	65 fpm maximum, single speed
D.	Motor	1-2 horsepower, minimum
E.	Electric Conductors	Festooned tag line or Enclosed bus bar
F.	Method and Location	Pendant, at Trolley

2.7 HOIST

A.	Type	Electric wire rope
B.	Service Class	Minimum Class H4 per HST-4 Specifications

C.	Speed	20 fpm maximum, single speed
D.	Motor	5 – 10 horsepower, minimum
E.	Hook Lift	See Data Sheet attached, from low hook to high hook position, minimum

2.8 ACCESSORIES

A. All required OSHA operating and safety devices.

2.9 SPECIAL CONDITIONS

A. See attached Bridge Crane Data Sheet for building clearances.

PART 3 - SPECIAL PAINTING

3.1 GENERAL

A. Shop and field painting of monorail track, hoists, and trolleys shall be as specified in Section 413313, OVERHEAD TRAVELING CRANES – GENERAL-WWTP.

3.2 MANUFACTURER'S SERVICES

A. A manufacturer's representative for the equipment specified herein shall be present at the jobsite and/or classroom designated by the Owner for the minimum person-days listed for the services hereinunder, travel time excluded:
   1. 1 person-day for installation assistance, inspection, field testing, jobsite training, and certification of the installation.

B. Startup services and training of Owner's personnel shall be at such times as requested by the Owner.

C. Also see Section 019113. GENERAL COMMISSIONING REQUIREMENTS.

END OF SECTION

SECTION 431030 – SUBMERSIBLE NON-CLOG CENTRIFUGAL PUMPS – WWTP

PART 1 - GENERAL

1.1 WORK INCLUDED

A. This section covers the work necessary to furnish and install, complete, the submersible non-clog centrifugal pumps and accessories for the Hospital WWTP and Hon-Dah WWTP. It is the intent of this specification that a complete system be furnished and installed. The pump manufacturer or supplier shall provide all pumps and other accessories, complete.

B. All equipment shall be compliant with Federal Acquisition Register the clause 52.225-11, Buy American-Construction Materials under Trade Agreements (Nov 2023) and provision 52.225-12, Notice of Buy American Requirement-Construction Materials under Trade Agreements (May 2014).

C. Related Sections:
1. Section 461155.04, PCN: INFLUENT PUMP STATION-WWTP
2. Division 40, PROCESS INTERCONNECTIONS-WWTP
3. Division 26, ELECTRICAL-WWTP
4. BP2 AND BP3 P&ID Drawings

1.2 EQUIPMENT NUMBERS

A. The equipment covered under this specification are:

Equipment Description	Hospital WWTP Equipment Numbers	Hon-Dah WWTP Equipment Numbers
Influent Pump Station Pump 1	1140-P-01	2140-P-01
Influent Pump Station Pump 2	1140-P-02	2140-P-02
Influent Pump Station Pump 3	1140-P-03	2140-P-03

1.3 DEFINITIONS

A. Total Dynamic Head (TDH): Total dynamic head shall be the total amount of head a pump shall provide in feet to move fluid from the suction point to the discharge point.

B. Overall Efficiency: Overall efficiency shall be the total efficiency for motor and pump from the motor terminals to pumped liquid, and shall be inclusive of pump hydraulic, volumetric, and mechanical efficiencies.

1.4 GENERAL

A. Like items of equipment provided hereunder shall be the end product of the same manufacturer in order to achieve standardization of operation, maintenance, spare parts and manufacturer's services; and shall include all necessary appurtenances for a complete and working system. The equipment shall be the product of a manufacturer regularly engaged in the production of equipment for the specified use. The manufacturer shall have the sole responsibility for the proper functioning and coordination of the equipment as furnished.

B. See the GENERAL CONDITIONS and Division 01, GENERAL REQUIREMENTS, which contain information and requirements that apply to the work specified herein and are mandatory for this project.

1.5 MANUFACTURER'S SERVICES

A. The pump manufacturer shall provide the services of a qualified representative for the equipment specified at the jobsite for installation assistance, inspection and certification of the installation, equipment testing, startup assistance, and training of Owner's personnel.

B. Also see Section 019113, GENERAL COMMISSIONING REQUIREMENTS in Division 01, GENERAL REQUIREMENTS.

C. A qualified manufacturer's representative shall be one who has had at least two years' experience in the installation of the types of pumps specified.

D. The manufacturer's representative for the equipment specified herein shall be present at the jobsite and/or classroom designated by the Owner for the minimum person-days listed, travel time excluded. For each WWTP, the following services shall be provided in a minimum of two trips:
   1. 1 person-day for installation assistance, inspection, and certification of the installation.
   2. ½ person-day for functional and performance testing.
   3. ½ person-day for pre-startup classroom or jobsite training.

E. Startup services and training of Owner's personnel shall be at such times as requested by the Owner.

F. Submit a certification of proper installation and satisfactory performance as specified in Part 3 of these Specifications.

1.6 SUBMITTALS

A. Submittals shall be made as required in Section 013300, SUBMITTAL PROCEDURES in Division 01, GENERAL REQUIREMENTS. In addition, the information summarized below shall be provided.

B. Shop Drawings shall include performance data curves showing head, capacity, horsepower demand, and pump efficiency over the entire operating range of the pump, from shutoff to maximum capacity. The equipment manufacturer shall indicate separately the head, capacity, horsepower demand, overall efficiency, and minimum submergence required at the guarantee point. Performance requirements shall be as defined in the Hydraulic Institute Standards.

C. Complete specifications, descriptive literature, dimensional drawings, assembly cuts, and materials of construction for all equipment and devices to be furnished under this specification section.

D. Make, model, and weights for all pumps, discharge elbows, and motors.

E. Motor manufacturers' guaranteed power factor and minimum efficiencies at three operating points within in the operational range, including the minimum, maximum and best efficiency point.

F. Complete connection diagrams.

G. Proposed factory and field test descriptions in sufficient detail to fully describe the specific tests to be conducted and quantities to be measured to demonstrate full conformance with these Specifications.

H. A complete set of manufacturer's instructions covering storage, installation, operation, lubrication, and maintenance shall be available at the jobsite no later than the date the pumps are received. This requirement is in addition to O&M manuals as specified in Section 017823, OPERATION AND MAINTENANCE DATA.

I. Certified copy of test report for identical motor tested in accordance with NEMA MG 1-12.53a and IEEE Standard 112, Test Method B, showing full load efficiency not less than specified value; motors not as specified will be rejected.

J. Motor Tests and Test Reports:
   1. Short commercial tests shall be made, including no-load current at rated voltage, high potential, and locked rotor current.
   2. Copies of test reports for actual motor being provided.

K. Complete motor rating and list of special motor features being provided.

1.7 ELECTRICAL

A. Electrical power and variable frequency drives (VFDs) will be provided under Division 26, ELECTRICAL-WWTP.

1.8 OPERATION AND MAINTENANCE MANUALS

A. Operation and Maintenance (O&M) Manuals for the equipment specified herein shall be furnished as specified in Section 017823, OPERATION AND MAINTENANCE DATA. Submit information from the pump manufacturer and the motor manufacturer.

B. The O&M manuals shall contain, at a minimum, full descriptions of all equipment specified herein, motor data, spare parts lists, and detailed instructions for all operation and maintenance tasks to be performed by the operator.

C. A spare manual shall be shipped with the equipment in order to allow for proper installation and operation of the equipment prior to the release of all final installation, operation, and maintenance manuals.

1.9 WARRANTY

A. The Manufacturer shall warrant that its equipment shall be free from defects in material and workmanship; and that it will replace or repair, any part or parts for which examination shall show to have failed under normal use and service by the Owner within five (5) years following the date of Substantial Completion. The five-year warranty shall at a minimum:
   1. Provide 100 percent coverage for the first 18 months.
   2. Provide 50 percent coverage from 19 months to 39 months.
   3. Provide 25 percent coverage from 40 to 60 months.

B. The Manufacturer shall be responsible for freight associated with shipping defective equipment to the factory.

C. This warranty shall not be encumbered nor limited by the number of hours of equipment operation time. Warranties that restrict coverage to operating conditions or limitations on hours of operation time are not acceptable.

PART 2 - PRODUCTS

2.1 GENERAL

A. "Basis-of-Design Products:" The first named Manufacturer's system was used as the Basis of Design for this Specification and the Drawings. The structures and facilities appurtenant to the pumps shall meet the basis of design in quality and capacity. Equipment furnished by all qualified, interested Manufacturers will be considered, provided the necessary structural, electrical, and mechanical changes are submitted in conformance with the requirements of the GENERAL CONDITIONS and DIVISION 1, GENERAL REQUIREMENTS. The Contractor shall be responsible for all design changes associated with other Manufacturers' equipment and shall bear all costs for necessary changes for a complete and satisfactory installation.

B. Electrical and controls materials and workmanship required to complete the work under this section shall also conform to the applicable requirements of Division 26, ELECTRICAL.

2.2 PUMP MANUFACTURERS AND MODELS

A. Xylem - Flygt N-Series

B. Sulzer – ABS XFP

C. Or approved equal.

2.3 SERVICE CONDITIONS

A. Pumps will handle raw sewage screened with a 2 mm perforated plate screen, digester decant, facility floor drains, and MBR cleaning solutions which can intermittently include citric acid and sodium hypochlorite. At the Hospital WWTP, the raw sewage is a combination of hospital/clinic and residential wastewaters. At the Hon-Dah WWTP, the raw sewage is residential.

B. Pumped Fluid Temperature: 10°C to 20°C

C. Pumps shall be designed for continuous duty and be suitable for installation in a Class 1, Div. 1 environment.

D. Pumps shall be designed for submersible installation in a wet well and shall be able to fit in the provided space while maintaining manufacturers' required clearances between pumps and wet well walls.

E. Pump Elevation
   1. Hospital WWTP: 5,630 feet ASL
   2. Hon-Dah WWTP: 7,160 feet ASL

F. System Curve for the Hospital WWTP: The following provides points on the system curve for the condition of minimum suction elevation and maximum discharge elevation and a roughness coefficient C = 120:
   1. One Pump: 175 gpm @ 32.7 ft; 200 gpm @ 33.5 ft; 225 gpm @ 34.4 ft; 250 gpm @ 35.3 ft; 300 gpm @ 37.5 ft.
   2. Two Pumps: 350 gpm @ 34.9 ft; 400 gpm @ 36.3 ft; 450 gpm @ 37.8 ft; 500 gpm @ 39.5 ft; 550 gpm @ 41.3 ft.
   3. Three Pumps: 450 gpm @ 36.2 ft; 525 gpm @ 38.2 ft; 600 gpm @ 40.5 ft; 675 gpm @ 43.1 ft.

G. System Curve for the Hon-Dah WWTP: The following provides points on the system curve for the condition of minimum suction elevation and maximum discharge elevation and a roughness coefficient C = 120:
   1. One Pump: 150 gpm @ 21.4 ft; 175 gpm @ 22.2 ft; 200 gpm @ 23.0 ft; 225 gpm @ 23.9 ft; 250 gpm @ 24.9 ft.
   2. Two Pumps: 250 gpm @ 21.7 ft; 300 gpm @ 22.7 ft; 350 gpm @ 23.8 ft; 400 gpm @ 25.1 ft; 450 gpm @ 26.6 ft.
   3. Three Pumps: 375 gpm @ 23.1 ft; 450 gpm @ 24.6 ft; 525 gpm @ 26.4 ft; 600 gpm @ 28.4 ft.

2.4 DESIGN CONDITIONS

A. Pump design conditions for each WWTP are:

Design Parameter	**Hospital WWTP Design Criteria**	**Hon-Dah WWTP Design Criteria**
Number	3 (2 duty/ 1 standby)	3 (2 duty/ 1 standby)
Design Point	225 gpm @ 34.4 ft TDH	200 gpm @ 23 ft TDH
Minimum Overall Efficiency at Design Point	50 percent	50 percent
Suction Head (Minimum Available)	10 inches	10 inches
Minimum NPSH Available	26.7 feet	25.3 feet
Maximum Nominal Speed	1,800 rpm	
Liquid Pumped Specific Gravity	1.0	
Maximum Size Discharge Connection Diameter	4”	
Motor Drive	Variable Frequency Drive	
Motor Nominal Speed	1800 rpm	
Maximum Rated Horsepower	6 hp	
Power Supplied	3 phase, 480 volt, 60 Hz	

2.5 PUMP CONSTRUCTION

A. Each pump, with its appurtenances and cable, shall be capable of continuous submergence underwater without loss of watertight integrity to a depth of 65 feet. Pumps shall be capable of operating dry for 30 minutes without damage to motor or seal.

B. The entire pump system, including the pumps, drives, controls, and cables shall be approved for use in areas classified as hazardous locations in accordance with NEC Class 1, Division 1, Group C and D service as determined and approved by a United States nationally approved testing agency (UL, FM, etc.) at the time of bidding the project.

C. Pumps shall be heavy-duty, non-clog type with oil-filled double mechanical shaft seals. Major pump components shall be of ASTM A 48 gray cast iron, Class 30 or 35B, or equivalent, with smooth surfaces devoid of blow holes and other irregularities. All exposed nuts and bolts shall be of AISI Type 316 stainless steel construction. All surfaces coming into contact with water, other than stainless steel or brass, shall be protected by an approved wastewater resistant coating, chloric rubber or two-part epoxy paint finish. The pump shafts to be completely isolated from the pumped liquid.

D. All mating surfaces where watertight sealing is required shall be machined and fitted with nitrile rubber O-rings or profile seal. Fitting shall be such that sealing is accomplished by metal-to-metal contact between machined surfaces. This shall result in controlled compression of nitrile rubber O-rings without the requirement of a specific torque limit. No secondary sealing compounds, rectangular gaskets, elliptical O-rings, grease, or other devices shall be used.

E. The cable entry seal design shall preclude specific torque requirements to ensure a watertight and submersible seal. The cable entry shall consist of a single cylindrical elastomer grommet, flanked by washers, all having a close tolerance fit against the cable outside diameter and the entry inside diameter and compressed by the body containing a strain relief function, separate from the function of sealing the cable. The assembly shall provide ease of changing the cable when necessary, using the same entry seal. The cable entry junction chamber and motor shall be sealed from each other, which shall isolate the stator housing from foreign material gaining access through the pump top.

F. Each pump shall be provided with a lubricant chamber for the shaft sealing system. The chamber shall be designed to prevent overfilling and to provide fluid expansion capacity. A drain and inspection plug, with positive anti-leak seal shall be easily accessible from the outside. The seal system shall not rely upon the pumped media for lubrication. The motor shall be able to operate dry without damage while pumping under load.

G. Each pump shall be provided with a tandem mechanical shaft seal system consisting of two totally independent seal assemblies and designed for ease of maintenance. The seals shall operate in an oil or glycol reservoir that hydrodynamically lubricates the lapped seal faces at a constant rate. The lower primary seal unit, located between the pump and the lubrication chamber, shall contain one stationary and one positively driven rotating tungsten carbide or silicon carbide ring. The upper secondary seal unit, located between the lubrication chamber and the motor housing, shall contain one stationary tungsten carbide or silicon carbide seal ring and one positively driven rotating tungsten carbide or silicon carbide seal ring. Each seal interface shall be held in contact by its own system. The seals shall require neither maintenance nor adjustment nor depend on direction of rotation for sealing.

H. Pump and motor shaft shall solid continuous shaft, constructed of AISI Type 416, 420, or 431 stainless steel. The pump shaft is an extension of the motor shaft. Pieced shafts of the use of couplings shall not be acceptable.

I. The pump shaft shall rotate on at least two permanently grease lubricated bearings. Bearing life shall be rated at 50,000 hours as defined by AFBMA standards. The upper bearing shall be a single deep groove ball bearing. The lower bearing shall be a two-row angular contact bearing to compensate for axial thrust and radial forces. Single row lower bearings are not acceptable.

J. The impeller(s) shall be of hard-iron, ASTM A-532 Rc 60 cast iron, or gray cast iron, Class 30 minimum hardness, dynamically balanced, semi-open, back-swept, non-clog design. The impeller vane leading edges shall be mechanically self-cleaned to keep them clear of debris, maintaining an unobstructed impeller leading edge and sustaining a high level of hydraulic efficiency. Impellers shall be locked to the shaft, held by an impeller bolt and treated with a corrosion inhibitor. The impeller vanes shall have hardened leading edges capable of handling solids, fibrous materials, heavy sludge and other matter found in wastewater. The impeller shall be capable of passing a maximum solid sphere of a size as specified hereinbefore. The impeller shall be coated with a PVC epoxy primer or liquid ceramic coating.

K. The volute shall be of a single piece design and shall have smooth fluid passages large enough at all points to pass any size solid which can pass through the impeller. The pump volute shall be made of ASTM A48 Class 40B gray cast iron or equivalent gray cast iron.

L. There shall be efficient sealing between the volute housing and the multi-vane semi-open impeller.

M. Each pump shall be provided with jacketed type motor cable of adequate length to reach the junction box without the need for splices. The pump motor cable shall be heavy duty multi-conductor type, with stainless steel braided shielding, a Chloroprene outer jacket and tinned copper conductors insulated with ethylene-propylene rubber suitable for submersible pump applications. The conductors shall be arranged in twisted pairs. Cable sizing shall conform to NEC and IEEE Specifications for pump motors. The cable shall contain all power and control conductors required for the pump system to meet these specifications.

2.6 DRIVE MOTOR CHARACTERISTICS

A. Each pump shall be equipped with a submersible electric motor connected for operation on a 480 volt, three phase, 60 hertz service. The pump motors shall be a squirrel cage, induction, shell type design, housed in an air or oil-filled, watertight chamber, NEMA Type B design rated for Class 1, Division 1 environments.

B. The stator winding shall be insulated with moisture resistant Class H insulation which shall resist a temperature of 356 degrees F. The stator shall be insulated with Class H resin.

C. The motors shall be designed for continuous duty and shall be capable of sustaining a minimum of ten evenly spaced starts per hour. The rotor bars and short circuit rings shall be made of aluminum. The motor of oil-filled units shall have a positive circulating system. For air-filled units, at the maximum rated power of this unit, thermal radiators (cooling fins) integral to the stator housing, shall be adequate to provide the cooling required by the motor. Water jacket or other device shall not be necessary for continuous pumping at sump liquid levels above mid-point of stator housing.

D. Thermal switches set to open at 260 degrees F shall be embedded in the stator lead coils to monitor the temperature of each phase winding. These thermal switches shall be used in conjunction with, and supplemental to, external motor overload protection and shall be connected to the control panel provided by others. The motor and pump shall be designed and assembled by the same manufacturer.

E. A seal leak sensor shall be provided in the motor housing to detect any moisture in the motor chamber. The sensor shall be wired for connection to a control panel provided by others for seal leak indication.

F. The motor horsepower shall be adequate so that the pump is non-overloading throughout the entire pump performance curve from shut-off through run-out. The motor rpm shall match driven equipment and motor size shall be as specified herein.

2.7 ELECTRICAL AND CONTROLS

A. Pump control shall be provided by the Plant Control System (PCS) as described in Section 406120, PROCESS CONTROL NARRATIVES-WWTP.

2.8 PUMP ACCESSORIES

A. Guide Rail Assemblies: A guide rail assembly shall be provided by the pump manufacturer as generally shown on the Drawings. The guide rail installation shall be an integral part of each pumping unit and shall automatically connect to the discharge piping when the pump is lowered into place. The entire weight of each pump shall be guided by no less than one guide rail and the guide rail(s) shall not support any portion of the weight of the pump. The guide rails shall be 2-inch Type 316 stainless steel standard weight pipe minimum, or sized larger as required by the pump manufacturer. The lower guide rail holders shall be integral with the discharge connection. Intermediate guide rail brackets shall be installed at locations determined by the manufacturer. The guide rails and lifting mechanism shall be non-sparking to prevent hazardous conditions. The assembly shall include a hook accessible from the top of the wet well for attaching a lifting chain. All miscellaneous bolts and nuts shall be Type 316 stainless steel. The guide rail assembly shall be coordinated with the wet well as generally detailed on the Drawings.

B. Discharge Connection Elbows: Manufacturer shall supply each pump with a discharge connection elbow that shall be permanently installed in the wet well along with the discharge piping. Elbow shall be bolted to floor and shall automatically mate with pump casing flange when lowered into place in simple linear downward motion of the pump without the use of any bolts, gaskets, or nuts. When in place the pump shall press tightly against the discharge connection elbow with profile gasket or metal to metal contact. No portion of the pumps shall bear directly on the floor of the pump bay wet well. Sealing of the discharge interfaces shall be by means of a diaphragm or O-Ring. The pumps shall connect to the discharge connection elbows and be easily removed with a lifting device for inspection or service. There shall be no need for personnel to enter pump wet well. All piping required to complete the discharge piping shall conform to the requirements of Division 40, PROCESS INTERCONNECTIONS-WWTP.

C. Anchor Bolts: Unless otherwise indicated, all anchor bolts shall be provided by the Contractor. Provide Type 316 stainless steel anchor bolts, 3/4-inch diameter minimum, for mounting pump discharge connection elbow. Length shall be adequate for conditions shown on the Drawings, through the grout fill and for at least 6-inches embedment into the precast manhole base.

D. Lifting Cable: Each pump shall be attached to a Type 316 stainless steel chain of adequate length and strength for lowering and lifting of the pump and rated for up to 2,000 lbs or twice the weight of the pump, whichever is greater. Alternative lifting assemblies must be provided as complete system and approved by Engineer.

E. Lifting lugs shall be provided for pump and any other equipment or items weighing over 100 pounds.

2.9 SPARE PARTS

A. For each pump supplied, provide a set of manufacturer standard spare parts kit, which should include at a minimum
   1. One (1) set of O rings
   2. One (1) set of bearings
   3. One (1) mechanical seal

B. Provide two (2) complete sets, one for the Hospital WWTP and one for the Hon-Dah WWTP, of any special tools required to dismantle and perform maintenance on the pumps.

PART 3 - EXECUTION

3.1 PREPARATION FOR SHIPMENT, SHIPMENT, AND PROTECTION

A. Equipment shall be prepared and protected for shipment and shipped in accordance with the requirements of Section 016000, PRODUCT REQUIREMENTS of Division 01, GENERAL REQUIREMENTS. In addition, the following shall be done:
   1. After testing and before dismantling for shipment, all wiring and mechanical connections shall be matchmarked or tagged to ensure proper field assembly.
   2. The Contractor shall make arrangements for extra protection until final installation if units are to be stored outside.

3.2 GENERAL

A. Care during storage and procedures for installation, lubrication and startup of the pumps and motors shall be in strict conformance with the manufacturer's instructions. In addition, the instructions for installation, operation and maintenance from the Hydraulic Institute Standards shall be adhered to where applicable.

3.3 PUMP AND DRIVER EQUIPMENT INSTALLATION

A. Install the pumps and accessories in accordance with the pump manufacturer's directions, the Drawings, and these Specifications. The pump installation shall be supervised by a manufacturer's representative and shall be approved by this representative prior to operating pumps.

B. Handle carefully and protect the pump and appurtenances to avoid damaging the equipment. Install the pumps so that connection may be made to the discharge headers without any springing or otherwise forcing either the pump or the header. Adjust pump assemblies such that the units are properly aligned, plumb, and level. Carefully fit and coat all bolt threads with lubricant to facilitate future removal.

C. After the pump discharge elbow bases have been set in position, aligned, and shimmed to the proper elevation, grout the space between the bottom of the baseplate and the concrete foundation with a poured, non-shrinking grout of the proper category, prepared and installed in accordance with Section 033000, CAST IN PLACE CONCRETE.-WWTP

D. All strain from attached piping shall be eliminated from the pumps. Any evidence of pump misalignment, noisy operation, or other signs of improper setting shall be corrected by the Contractor.

E. The equipment shall be provided with all necessary factory lubrication. Before initial startup at final installation, lubrication for all bearings, etc. shall be checked in accordance with the pump and/or motor manufacturer’s recommendations.

3.4 PAINTING

A. All shop and field painting shall be done with manufacturer standard coating for domestic wastewater applications approved by the Engineer.

3.5 FIELD TESTS

A. Functional Test: Prior to plant or pump station startup, all equipment described herein shall be inspected for proper alignment, quiet operation, proper connection, and satisfactory performance by means of a functional test.

B. Vibration Test: The complete assembly, consisting of the driving unit and pump, connected and in normal operation, shall not develop amplitudes of vibration exceeding limits recommended by the current edition of Hydraulic Institute Standards.

C. Performance Test:
   1. The Contractor, with the assistance of the pump manufacturer's representative, shall perform field performance tests on both of the pump assemblies to demonstrate their conformance to the Specifications to the satisfaction of the Engineer. A test log shall be presented to the Engineer upon the completion of each test that records the following:
      a. Flow, as measured by plant instrumentation and/or storage volumes.
      b. Pump discharge pressures as measured by calibrated gauges and converted to feet of the liquid pumped and corrected to pump centerline, calculated velocity heads at the discharge flange, and total head, all tabulated in feet.
      c. Driving motor voltage and amperage measured for each phase.
      d. Motor manufacturer's guaranteed power factor and efficiency at three operating points within operational range, ideally minimum, maximum and best efficiency point.
   2. Units failing to meet the Specifications to the satisfaction of the Engineer must be replaced or more accurately tested in accordance with Hydraulic Institute Standards. If the pump fails the second test, the unit will be rejected, and the Contractor shall furnish a unit that will perform as specified. In addition, if only one pump is tested and the specified pump fails the second test, all identical pumps covered by the Detail Pump Specification for the pump under test shall be tested under the same provisions, whether specified or not, at the Contractor's sole expense. Testing and pump replacement shall be accomplished at no additional cost to the Owner.

3.6 MANUFACTURER'S CERTIFICATE(S)

A. Provide manufacturer's certificate(s) in accordance with Section 019113, GENERAL COMMISSIONING REQUIREMENTS of Division 01, GENERAL REQUIREMENTS. The certificate shall show:
   1. That the handling of pump equipment was satisfactory to the manufacturer.
   2. The installation is as specified and is acceptable to the manufacturer.
   3. Include all results and testing data recorded during field testing.

END OF SECTION

SECTION 431111 – BLOWERS – WWTP

PART 1 - GENERAL

1.1 GENERAL

A. See the GENERAL CONDITIONS and Division 01, GENERAL REQUIREMENTS, which contain information and requirements that apply to the work specified herein and are mandatory for this project.

B. All equipment shall be compliant with Federal Acquisition Register the clause 52.225-11, Buy American-Construction Materials under Trade Agreements (Nov 2023) and provision 52.225-12, Notice of Buy American Requirement-Construction Materials under Trade Agreements (May 2014).

1.2 WORK INCLUDED

A. This section covers the work necessary to furnish and install, complete, the four aerobic digester blowers and all necessary appurtenances for a complete and working system for the Hospital WWTP and Hon-Dah WWTP.

B. Each blower module will be complete and include the gearbox, aerodynamic compressor stage, lubrication system, electric drive motor, bypass valve, control system, gauges and other equipment required for satisfactory operation.

C. The work shall include furnishing equipment, material and supplies to complete the work as specified herein. All components of the blower system shall be furnished by a single Manufacturer who shall be responsible for the performance and compatibility of all blower equipment components.

D. Related Sections:

1. The work of the following sections is related to the work of this section. Other sections, not referenced below, may also be related to the proper performance of this work. It is the Contractor's responsibility to perform and coordinate all the work required by the Contract Documents.
   a. Section 013300, SUBMITTAL PROCEDURES
   b. Section 016000, PRODUCT REQUIREMENTS
   c. Section 019113, GENERAL COMMISSIONING REQUIREMENTS
   d. Section 017700, CLOSEOUT PROCEDURES
   e. Division 26, ELECTRICAL-WWTP
   f. P&ID Drawings

1.3 EQUIPMENT NUMBERS

Equipment Description	Hospital WWTP Equipment Numbers	Hon-Dah WWTP Equipment Numbers
Aerobic Digester Blower 1	1700-B-01	2700-B-01
Aerobic Digester Blower 2	1700-B-02	2700-B-02
Aerobic Digester Blower 3	1700-B-03	
Aerobic Digester Blower 4	1700-B-04	

1.4 QUALITY ASSURANCE

A. The equipment covered by these specifications shall be the product of a single Manufacturer regularly engaged in the production of equipment for the specified use. The Manufacturer shall have the sole responsibility for the proper functioning of the equipment as furnished.

B. The blower equipment Manufacturer shall be experienced in the manufacture, installation, and operation of specified aeration blower systems, as demonstrated by a minimum of (10) years in the blower business and a minimum of (30) blower systems installed at wastewater treatment facilities of comparable size to the ones specified in these specifications.

1.5 SUBMITTALS

A. Submittals during construction shall be made in accordance with Section 013300, SUBMITTAL PROCEDURES in Division 01, GENERAL REQUIREMENTS. In addition, the following specific information shall be provided:
   1. The submittal package shall include shop drawings showing all appurtenances and drawings of individual components showing dimensions, locations of inlet and outlet connections, and mounting details for appurtenant components.
   2. Complete equipment installation manuals including information on field erection and installation requirements that are useful to the Contractor during construction and the Owner during future operations and maintenance.
   3. Manufacturer's information and cut sheets including blower performance curves, materials of construction, total weight, and dimensions of each blower, mounting base, motor, sound attenuating enclosure, and appurtenances.
   4. Complete motor information including speed torque, efficiency, and power factor versus load characteristics.
   5. Blower, cooling fan, and instrumentation information.
   6. Submit factory test results prior to shipment of the blowers.
   7. Product data for all system components, including but not limited to manufacturer information, model numbers, and cut sheets indicating capacities, sizes, and other information necessary to completely identify each component.
   8. Electrical and control drawings including circuit schematics, interconnection diagrams, and all information necessary for connection of motors, electrical components, and communication with a SCADA system. Also show all landings or connections that must be completed in the field.
   9. List of spare parts to be supplied with the blower system.
   10. Submit field test results and certificates as required in this Specification.

1.6 OPERATION AND MAINTENANCE MANUALS

A. Operation and Maintenance Manuals and Maintenance Summary Sheets for the equipment specified herein shall be furnished as specified in Section 017823, OPERATION AND MAINTENANCE DATA in Division 01, GENERAL REQUIREMENTS.

B. At a minimum, the O&M manuals shall contain full descriptions of the blowers, performance curves, spare parts lists, and detailed instructions for all operation and maintenance tasks to be performed by the operator.

C. A spare manual shall be shipped with the equipment in order to allow for proper installation and operation of the equipment prior to the release of all final installation, operation, and maintenance manuals.

1.7 MANUFACTURER'S SERVICES

A. Manufacturer's services shall be provided in accordance with Section 019113, GENERAL COMMISSIONING REQUIREMENTS and the following:

1. A qualified Manufacturer's representative of the equipment specified shall be present at the jobsite for installation assistance, inspection and certification of the installation, equipment testing, startup assistance, and training of Owner's personnel for the minimum person-days listed, travel time excluded. Provide the following services for each WWTP in a minimum of two trips:
   a. 1 person-day for installation assistance, and inspection and certification of the installation.
   b. 1 person-day functional and performance testing of the blowers.
   c. ½ person-day for pre-startup classroom or jobsite training.
2. A qualified Manufacturer's representative shall be one who has had at least 2 years of experience in the installation of the equipment specified herein.
3. Startup services and training of Owner's personnel shall be at such times as requested by the Owner.
4. Submit a certification of proper installation and satisfactory performance as specified in Part 3 of these Specifications.

1.8 WARRANTY

A. The blower systems Manufacturer shall warrant to Owner that the bare blowers furnished will be free from defects in materials and workmanship for a period of 24 months from the date of Substantial Completion. The warranty for all other system components shall extend to all packaged products supplied by the blower system manufacturer and shall be for a period of 12 months from the date of Substantial Completion. In the event of material or workmanship failure, the Manufacturer shall either repair or replace the damaged or defective components or services or refund payments to Owner for the components or services found to be defective.

B. The Manufacturer shall be responsible for labor and freight associated with shipping defective equipment to the factory or certified repair facility.

PART 2 - PRODUCTS

2.1 GENERAL

A. “Basis-of-Design Products:” The first named Manufacturer’s system was used as the Basis of Design for this Specification and the Drawings. The structures and facilities appurtenant to the blowers shall meet the basis of design in quality and capacity. Equipment furnished by all qualified, interested Manufacturers will be considered, provided the necessary structural, electrical, and mechanical changes are submitted in conformance with the requirements of the GENERAL CONDITIONS and DIVISION 1, GENERAL REQUIREMENTS. <u>The Contractor shall be responsible for all design changes associated with other Manufacturers’ equipment and shall bear all costs for necessary changes for a complete and satisfactory installation.</u>

2.2 MANUFACTURER

A. Aerzen

B. Or approved equal.

2.3 SERVICE CONDITIONS

A. Site Conditions for the Hospital WWTP:
   1. Site Elevation: 5630 ft. ASL
   2. Maximum Air Temperature: 90ºF at 90% relative humidity
   3. Outside Ambient Air Temperature: 40°F – 120°F

4. Minimum Inlet Air Temperature: 15°F at 30% relative humidity
5. Electrical Requirements: 480 volt, 3 phase, 60 Hz

B. Site Conditions for the Hon-Dah WWTP:
1. Site Elevation: 7,160 ft. ASL
2. Maximum Air Temperature: 90ºF at 90% relative humidity
3. Outside Ambient Air Temperature: 0°F – 100°F
4. Minimum Inlet Air Temperature: 0°F at 30% relative humidity
5. Electrical Requirements: 480 volt, 3 phase, 60 Hz

C. Performance Conditions to be met with each unit (Hospital):
1. Minimum: 20 scfm; 2 psi
2. Maximum: 207 scfm; 8.0 psi

D. Performance Conditions to be met with each unit (Hon-Dah):
1. Minimum: 20 scfm; 2 psi
2. Maximum: 165 scfm; 8.0 psi

E. Blower (both sites):
1. Each blower shall be capable of delivering the minimum airflow and pressure as specified, while operating at no more than 93% of the maximum operating speed shown in the blower Manufacturer's catalog.

F. Motors (Hospital):
1. Provide a 15 hp motor.

G. Motors (Hon-Dah):
1. Provide a 10 hp motor.

H. Inlet and Outlet Connections (both sites):
1. Provide 3-inch flanged inlet and flexible outlet connectors.

2.4 GENERAL REQUIREMENTS

A. Blowers shall be oil-free, positive displacement, rotary lobe with three lobes per rotor, designed for air service, and belt-driven via electric motor.

B. Each blower system shall include acoustic enclosures, inlet silencers, inlet flex joints, blowers, motors, base frames, discharge flex joints, discharge silencers, pressure relief valves, check valves, and instrumentation. The aeration blower systems shall conform to the conditions listed below.

2.5 BLOWER

A. The casing shall be constructed of high strength, close grained, cast iron. Casing design shall prevent casing deflection, facilitate cooling, and aid in pulsation dampening.

B. The end plates shall be cast iron. Replaceable seal wear inserts shall be provided for both end plates as required.

C. Each tri-lobe rotor shall be constructed of a single casting of high strength cast iron, ductile iron, or EN GJS 500. Impellers shall be statically and dynamically balanced to ISO 1940 standards. The impellers must operate without rubbing, liquid seals or lubrication. The shaft shall be cast integrally with the rotors.

D. Bearings shall control the axial location of the impeller/shaft in the unit. At a minimum, bearings shall not require service or replacement more frequently than every 5 years.

E. Timing gears shall be precision machined from case hardened steel and finish ground to ensure concentricity. Timing gears and bearings shall be splash lubricated.

2.6 MOTORS

A. Each TEFC motor shall be designed, manufactured, and tested in accordance with the latest revision of NEMA MG1, IEC, IEEE, ANSI, and AFBMMA standards as applicable. The motor shall provide power to the blower without using the service factor of minimum 1.15 at the maximum design pressure.

B. The motors shall be driven by 480 volt, 3 phase, 60 hertz with Class F insulation and Class B temperature rise.

C. All blower motors shall be inverter duty rated for use with variable frequency drives up to 480V as defined by NEMA -MG part 31.4.

D. The blower motors shall also be suitable for full load/direct on-line starting and solid state ramp starting.

E. The packages shall be driven through V-belts and sheaves. The drive shall be of the high capacity type, oil and heat resistant, with a 1.4 safety factor. Tensioning of the V-belts shall be automatic by use of a pivoting motor base. The drive guard shall be the Manufacturer's standard with provision for ventilation. The guard shall fully enclose the drive and shall be designed to meet current OSHA standards.

2.7 BASE FRAMES AND ACOUSTICAL ENCLOSURES

A. Each blower base shall be fabricated from heavy-duty steel or cast iron suitable to accommodate the items specified for factory mounting. It shall be designed to resist distortion while being installed on vibration isolating mounts. The base frame and enclosure shall be grounded per Manufacturer's recommendation.

B. Each blower shall be provided with an enclosure designed, assembled, and inspected by the Manufacturer to provide the noise reduction specified herein.

C. Each enclosure must limit the noise level to 80 dBA when the blower is in operation under the specified design conditions. The measurements shall be made at a distance of 1 meter (3 feet) from the equipment, in a free field environment as defined by ISO 2151.

D. Access to the blower shall be through the enclosure front, top, or back, allowing side-by-side installation of the units. Panels shall be easily removable without the use of special tools. Checking, changing, and adding lubricant must be able to be performed without unmounting or removing any other blower components

E. Acoustical absorption media shall be fitted to the inside of each exterior enclosure surface and show contact at all points. Media shall be securely fitted. Any adhesives and hardware used to secure the acoustical absorption media shall be manufactured from corrosive resistant materials rated for high temperature application. Media shall be fire-retardant, self-extinguishing, and non-dripping.

F. A cooling fan shall be provided within the enclosure to prevent overheating of the components within. Fan motor and/or blades shall be sized to provide adequate motor cooling at all process air flows and throughout the range of ambient temperatures. Fan fasteners shall be galvanized steel. Fans that are not blower shaft driven shall comply with the following:

1. Fan motor rated at 120 VAC, 1-phase, 60 Hz. These devices shall be terminated to terminal blocks to accept a line voltage connection within the blower enclosure. Contractor shall provide line voltage wiring and circuit protection for the enclosure cooling fan motor.

2.8 INLET AND OUTLET CONDITIONS

A. Flanged connectors shall be provided for connecting steel pipe to the outlet of the blowers and flexible connectors shall be provided for connecting steel pipe to the inlet of the blowers. Connector materials shall be rated for operation at pressures of up to 20 psig and temperatures of up to 250°F. Contractor shall provide all hardware necessary to connect the flexible connector to the process piping. Hardware shall be Type 316 stainless steel.

2.9 SILENCERS

A. An inlet silencer shall be provided and installed within the blower enclosure. The silencer shall be mounted directly to the blower inlet.

B. A discharge silencer shall be mounted directly to the outlet of the blower and integral to the base frame. The silencer shall be designed for all frequency ranges of the blower. Silencers using absorption material must have provisions for preventing loose absorption material from entering the air stream.

2.10 VALVES

A. A discharge check valve shall be provided for each blower and shall be of full flow, low pressure drop, swing or flapper type design. The valve shall be installed integral to the blower enclosure.

B. A spring loaded pressure relief valve shall be mounted integrally to the blower package, between the discharge silencer and the check valve. The pressure relief valve shall be designed to protect the blower from exceeding its maximum pressure rating and shall be adequately sized for the design air flows given above.

2.11 INSTRUMENTATION

A. For more information refer to Section 406120, PROCESS CONTROL NARRATIVES-WWTP. The following instruments shall be provided:

1. An inlet filter restriction gauge shall be mounted on the face of each blower enclosure. The restriction gauge shall progressively measure vacuum in the filter element or show differential pressure across the filter. The gauge shall be minimum 2.5-inch diameter with a manual reset and shall lock at the current vacuum when the blower is shut off.
2. A discharge temperature gauge shall be mounted on the face of each sound enclosure. The temperature gauge shall be minimum 2.5-inch diameter, glass or plastic window, with a 50-300°F display. The thermocouple shall be corrosion resistant.
3. A discharge pressure gauge shall be mounted on the face of each sound enclosure. The pressure gauge shall be minimum 2.5-inch diameter, stainless steel case, brass or bronze bourdon tube, glycerin filled, pressure gauge with a 0-15 PSIG scale.
4. A discharge temperature switch to be provided with 120VAC rated dry contact and shall be wired to the associated VFD to stop the blower if the temperature rises above the setpoint. The temp setpoint shall be selected and adjusted by the blower manufacturer. A high temperature alarm shall be triggered.

2.12 COATINGS

A. Blower, motor, and base frame shall be coated with Manufacturer's standard coating system.

B. Blower enclosure exposed areas must be cleaned, degreased, painted or powder-coated and free of burs and sharp edges.

2.13 ACCESSORIES

A. Inlet Filter-Common on inlet piping. See Part 2.16.

2.14 SPARE PARTS

A. One (1) spare set of belts for each blower.

B. One (1) spare filter element per blower.

C. Sufficient lubrication for 1 year of operation for each blower.

2.15 ELECTRICAL

A. Refer to Division 26, ELECTRICAL-WWTP, for electrical equipment information.

2.16 CONTROLS

A. Blower control shall be provided by the Plant Control System (PCS) as described in Section 406120, PROCESS CONTROL NARRATIVES-WWTP.

2.17 BLOWER PIPING AND MANIFORLD INTAKE FILTER/SILENCER

A. General Contractor shall provide one (1) intake filter/silencer to be mounted on the exterior common intake pipe for the Digester Blowers as shown on the Drawings (both sites).

B. Each unit shall be capable of handling a minimum air flow rate of 2,250 scfm. The intake filters shall be of heavy-duty construction. The filter elements shall be dry, washable, cartridge type having a minimum efficiency of 98 percent efficient at 10 micron particles. A weatherhood shall be provided for each unit to prevent intake of rain and snow and shall be removable for easy access to the filter element. Each weatherhood shall be powder-coated to match air piping color. Outlet connections shall be 6-inch diameter, 150-pound flange.

C. Each unit shall have a minimum sound attenuation of 10 dB over a frequency range of 63 to 500 Hz and 20db over a frequency range of 500 to 8,000 Hz. Pressure drop through the unit shall be <2 inches H2O at 100% of rated flow.

D. Units shall be Endustra Filter Mfrs Tri-Vent Series P09, or approved equal

2.18 QUALITY CONTROL

A. Each blower shall be tested at the factory for acceptable vibration and shaft excursion levels.

B. Upon completion of assembly, the blower system shall be functionally tested at the factory for duration of not less than 2 hours. All units of measure shall be listed in USA English units.

C. The entire blower system shall be tested as an operational system prior to shipment. Throughout the entire test, filters cannot be removed, door and/or panels cannot be open/taken off to affect performance. All start/stop and running sequences and safety alarms systems shall be tested.

D. Performance data will be collected and recorded at all design points.

PART 3 - EXECUTION

3.1 GENERAL

A. Contractor shall inspect, store (if required) and install the equipment contained in this Specification in accordance with Manufacturer's written instructions and approved submittals.

3.2 PREPARATION FOR SHIPMENT, STORAGE, AND PROTECTION

A. Equipment and materials shall be prepared and protected for shipment and storage in accordance with the requirements of Section 016000, PRODUCT REQUIREMENTS.

B. Insofar as is practical, the equipment specified herein shall be factory assembled. The interior inlet filter, inlet silencer, blower, motor, drive, drive guard, discharge silencer, valves, interconnecting piping, supports and all other accessories shall be shipped assembled on the base to the extent allowable by trucking. The parts and assemblies that are of necessity shipped unassembled shall be packaged and tagged in a manner that will protect the equipment from damage and facilitate the final assembly in the field.

C. For storage in excess of four (4) months, see the Manufacturer's operation and maintenance manual. Do not store in damp, humid, or corrosive environment.

3.3 EQUIPMENT INSTALLATION

A. Install and adjust equipment in accordance with the factory drawings and the manufacturer's instructions. The equipment must not be operated until the installation is approved by the manufacturer's representative. All electrical equipment (motor) protection and 110 VAC circuit protection is to be provided by the CONTRACTOR.

3.4 FUNCTIONAL TESTING

A. Each blower shall be tested at the factory for acceptable vibration and shaft excursion levels.

B. Upon completion of assembly, the blower system shall be functionally tested at the factory for duration of not less than 2 hours. All units of measure shall be listed in USA English units.

C. The entire blower system shall be tested as an operational system prior to shipment. Throughout the entire test, filters cannot be removed, door and/or panels cannot be open/taken off to affect performance. All start/stop and running sequences and safety alarms systems shall be tested.

D. Performance data shall be recorded at all design points and submitted with shipment of the blowers.

E. Field Testing: Prior to plant startup, all equipment described herein shall be inspected for proper alignment, quiet operation, proper connection, power draw, and satisfactory performance by means of a functional test.

F. Blowers shall be run for a minimum of 2 hours at full capacity and for an additional 20 minutes at each additional design condition as specified above. Operating temperature, pressures, and air flow shall be observed and recorded.

G. All instrumentation shall be checked to verify proper performance.

H. As far as practical and recommended by the Manufacturer, fault conditions shall be simulated to check blower response.

3.5 MANUFACTURER'S CERTIFICATE

A. Provide manufacturer's certificate(s) in accordance with Section 019113, GENERAL COMMISSIONING REQUIREMENTS in Division 01, GENERAL REQUIREMENTS.

B. The blower Manufacturer shall furnish to the Contractor, a written report certifying that the equipment; (1) has been properly installed and lubricated; (2) is in accurate alignment; (3) is free from any undue stress imposed by connecting piping or anchor bolts; and (4) is in compliance with any conditions listed herein.

C. The report shall include all results of the functional testing.

END OF SECTION

SECTION 432256 – SUBMERSIBLE MIXERS – WWTP

PART 1 - GENERAL

1.1 WORK INCLUDED

A. This section covers the work necessary to furnish and install, complete, submersible mixers with mounting system and accessories for the Hospital WWTP and Hon-Dah WWTP.

B. All equipment shall be compliant with Federal Acquisition Register the clause 52.225-11, Buy American-Construction Materials under Trade Agreements (Nov 2023) and provision 52.225-12, Notice of Buy American Requirement-Construction Materials under Trade Agreements (May 2014).

C. Related Section:
   1. The work of the following sections is related to the work of this section. Other sections not referenced below, may also be related to the proper performance of this work. It is the Contractor's responsibility to perform and coordinate all the work required by the Contract Documents.
      a. Division 40, PROCESS INTERCONNECTIONS-WWTP
      b. Division 26, ELECTRICAL-WWTP
      c. P&ID Drawings

1.2 EQUIPMENT NUMBERS

A. EQ BASIN MIXER
   1. Hospital WWTP 1210-SM-01
   2. Hon-Dah WWTP 2210-SM-01

1.3 GENERAL

A. Like items of equipment provided hereunder shall be the end product of the same manufacturer in order to achieve standardization of operation, maintenance, spare parts and manufacturer's services; and shall include all necessary appurtenances for a complete and working system. The equipment shall be the product of a manufacturer regularly engaged in the production of equipment for the specified use. The manufacturer shall have the sole responsibility for the proper functioning and coordination of the equipment as furnished.

B. See the GENERAL CONDITIONS and Division 01, GENERAL REQUIREMENTS, which contain information and requirements that apply to the work specified herein and are mandatory for this project.

1.4 QUALITY ASSURANCE

A. The equipment covered by these specifications shall be the product of a single Manufacturer regularly engaged in the production of equipment for the specified use. The Manufacturer shall have the sole responsibility for the proper functioning of the equipment as furnished.

B. The mixer Manufacturer shall have equipment of a similar type in satisfactory operating condition for not less than 5 years. Installation shall be of similar size and type to the application specified herein.

1.5 SUBMITTALS DURING CONSTRUCTION

A. Submittals shall be made as required in Section 013300, SUBMITTAL PROCEDURES in Division 01, GENERAL REQUIREMENTS. In addition, the following specific information shall be provided:
   1. Complete specifications, drawings, and descriptive literature on the equipment and any exceptions to these Specifications. At a minimum, the following shall be included:
      a. Make, model, weight of each major item of equipment.
      b. Expected thrust and vibrational dynamics.
      c. Submit engineering calculations, which illustrate the capability of the mixer for maintaining solids suspension under the conditions specified herein.
      d. Submit written certification of actual power consumption for each mixer model provided.
      e. Complete information regarding the painting systems proposed for use and to substantiate suitability for domestic wastewater contact/service.
      f. Provide information for moisture sensors and the associated control relays.
      g. Submit a reference list of similar installations, including date of installation, location, and contact information.
      h. Provide a list of Manufacturer supplied spare parts.
   2. Submit factory and field test results and certificates as required in this Specification.
   3. Submit qualifications of the Manufacturer's representative.

1.6 OPERATION AND MAINTENANCE MANUALS

A. Operation and Maintenance (O&M) Manuals and Equipment Maintenance Summary Sheets for the equipment specified herein shall be furnished as specified in Section 017823, OPERATION AND MAINTENANCE DATA.

B. The O&M manuals shall contain at a minimum, full descriptions of the mixers, performance curves, spare parts lists, and detailed instructions for all operation and maintenance tasks to be performed by the operator.

C. A spare manual shall be shipped with the equipment in order to allow for proper installation and operation of the equipment prior to the release of all final installation, operation, and maintenance manuals

1.7 MANUFACTURERS' SERVICES

A. The Manufacturer shall provide the services of a qualified representative for the equipment specified at the jobsite for installation assistance, inspection and certification of the installation, equipment testing, startup assistance, and training of Owner's personnel.

B. See Section 019113, GENERAL COMMISSIONING REQUIREMENTS in Division 01, GENERAL REQUIREMENTS

C. A qualified Manufacturer's representative for the equipment specified shall be present at the jobsite and/or classroom designated by the Owner for the minimum person-days listed, travel time excluded. Provide the following services for each WWTP in a minimum of two trips:
   1. ½ person-day for installation assistance, functional testing, and certification of the installation

2. ½ person-day for Owner training (classroom and hands-on)

D. A qualified Manufacturer's representative shall be one who has had at least 2 years of experience in the installation of the equipment specified herein.

E. Startup services and training of Owner's personnel shall be at such times as requested by the Owner.

F. Specific services to be performed shall include the following:
1. Be present during installation and alignment of equipment.
2. Check the completed installations(s) and provide written certification to the Engineer that the units are installed as specified and per the Manufacturer's recommendations.
3. Direct initial startup and preside at field test of equipment.
4. Provide training of Owner's operating and maintenance personnel in equipment operation, maintenance, and troubleshooting.
5. Submit a certification of proper installation and satisfactory performance as specified in Part 3 of these Specifications.
6. Assist Owner's personnel in registration of mixers with the Manufacturer.
7. Submit a certification of proper installation and satisfactory performance as specified in Part 3 of these Specifications.

G. If there are difficulties in operation of the equipment due to the Manufacturer's fabrication or Contractor's installation, additional service shall be provided at no extra cost to the Owner.

1.8 MANUFACTURER'S WARRANTY

A. The Manufacturer shall warrant each submersible mixer and motor, guide rails, starting controls, and power cables against defects in workmanship and materials for 2 years, non-prorated, from the date of Substantial Completion.

B. The Manufacturer shall pay the cost of replacement parts and labor, as well as cost of shipping defective equipment to the factor, as necessary to cure any defects in workmanship or materials discovered during the warranty period.

C. This warranty shall not be encumbered nor limited by the number of hours of mixer running time. Warranties that restrict coverage to operating conditions or limitations on hours of running time shall not be acceptable. Operating conditions shall be a minimum of continuous running capability without thermal or overload interruption.

PART 2 - PRODUCTS

2.1 GENERAL

A. "Basis-of-Design Products:" The first named Manufacturer's system was used as the Basis of Design for this Specification and the Drawings. The structures and facilities appurtenant to the blowers shall meet the basis of design in quality and capacity. Equipment furnished by all qualified, interested Manufacturers will be considered, provided the necessary structural, electrical, and mechanical changes are submitted in conformance with the requirements of the GENERAL CONDITIONS and DIVISION 1, GENERAL REQUIREMENTS. <u>The Contractor shall be responsible for all design changes associated with other Manufacturers' equipment and shall bear all costs for necessary changes for a complete and satisfactory installation.</u>

2.2 EQUIPMENT MANUFACTURERS

A. Xylem-Flygt: Model 4640

B. Sulzer: Model ABS XRW

C. Or Approved Equal

2.3 SERVICE CONDITIONS AND PERFORMANCE REQUIREMENTS

A. Liquid Mixed: finely screened and degritted influent and solids process recycle flows.

B. Water Temperature: 10°C – 20°C

C. Mixing Cycle: Continuous.

D. Basin Dimensions: As shown on the Drawings.
   1. Hospital WWTP: 31’-0” (L) x 15’-2” (W) x 17’- 6” (SWD)
   2. Hon-dah WWTP: 30’-8” (L) x 12’-0” (W) x 17’- 6” (SWD)
   3. Maximum operating water level: 15.5 feet

E. The mixers shall each meet or exceed the following performance requirements:
   1. Mixer shall completely homogenize basin contents.
   2. Drive Type: direct, close coupled submersible.
   3. Mixer shall meet performance requirements without the use of a propeller shroud.

F. Mixers shall be able to be raised and lowered without the need for personnel to enter the tank.

2.4 MIXER DESCRIPTION

A. Each mixer shall be of the direct drive, submersible type. All components of the mixer, including motor, shall be capable of continuous underwater operation.

B. Mixer Housing:
   1. Materials of construction shall be ASTM A48, Class 35 or higher cast iron, with smooth surfaces devoid of blowholes and other irregularities, or type 316 stainless steel. All exposed nuts and bolts shall be of type 316 stainless steel.

C. Propeller, Shaft, and Bearings:
   1. The propeller shall be of Type 316 stainless steel, or of closed-cell polyurethane (PUR) construction, and shall be statically and dynamically balanced.
   2. The propeller shall have 2 or 3 backwards curved blades. The propeller shall be capable of handling solids, fibrous materials, heavy sludge. The propeller cross section shall be designed to reduce drag and shed fibrous material.
   3. Propellers shall be slip fit and securely held to the shaft by a stainless steel washer and bolt assembly that is enclosed in a separate hub chamber. The hub chamber entrance shall be sealed with an O-ringed cap.
   4. Shafts shall be AISI 420 (1.4021), AISI 431, or Type 316 stainless steel.
   5. The mixer shaft shall rotate on three permanently lubricated bearings. Mixer sunder 2kW may have two permanently lubricated bearings. The bearings shall be pre-loaded by a bearing loading nut. All bearings shall have a minimum B-10 rated life of 100,000 hours.

D. Mechanical Seals:
   1. Each mixer shall be provided with two independent mechanical seals separated by an oil filled chamber.

2. Only the seal faces of the outer mechanical seal assembly and its retaining clips shall be exposed to the process liquid.
3. The seals shall not require routine maintenance or adjustment.
4. A moisture sensor probe complete with the associated control relay shall be furnished for each mixer. The moisture probe should be accessible for maintenance without the need to disassemble the mixer.
    a. The sensor shall be wired to the associated MCC installed control relay and shall activate an alarm light upon seal failure. This alarm light shall indicate the seal failure location. The moisture sensor control relay shall be supplied by the mixer supplier to the MCC Manufacturer to be installed during MCC construction. The control relay power supply shall be 120VAC and the output relay shall be rated for 120VAC.

2.5 MOTOR

A. Each mixer shall be furnished with a squirrel cage, induction motor enclosed in a watertight housing suitable for use submerged wastewater applications.

B. The motors shall be air-filled and constructed, at a minimum, with moisture resistant NEMA Class F insulation and constructed to NEMA B design standards. The copper wound stator shall be dipped in epoxy enamel and hardened to withstand a minimum temperature of 155 degrees Centigrade as defined in NEMA Standard MG-1. The rotor shall be statically and dynamically balanced after fabrication. The constructed motor shall be certified for continuous duty with a service factor of 1.15.

C. Motors shall be capable of sustaining a minimum of 10 starts per hour at an ambient temperature of 40°C.

D. Motors shall be capable of uninterrupted operation with a voltage drop of 10%.

E. Motors shall be 3 phase , 480VAC, premium efficiency with a combined service factor shall be at least 1.10.

F. Thermal switches shall be furnished to monitor stator temperatures. The stator shall be equipped with a minimum of two (2) thermal switches. Thermal switches shall automatically de-energize the motor when its temperature exceeds a preset limit as recommended by the Manufacturer. They shall be wired to the Manufacturer supplied control relay.

G. The Manufacturer's nameplates shall be engraved, laser etched or stamped on stainless steel and fastened to the motor casing.

2.6 CABLE ENTRY

A. The cables shall enter the mixer motor through a heavy duty cast iron entry assembly which shall be provided with an external clamp assembly to protect against tension once secured providing a strain relief function as part of standard construction. The cable entry shall be leak proof, torque-free, and especially designed for submersible service applications.

2.7 ELECTRICAL AND CONTROLS

A. Mixer control shall be provided by the Plant Control System (PCS) as described in Section 406120, PROCESS CONTROL NARRATIVES-WWTP.

2.8 FACTORY COATING

A. All surfaces coming into contact with water, other than stainless steel, shall be protected with the Manufacturer standard corrosion resistant two-component epoxy coating or ceramic-based paint system.

2.9 MOUNTING SYSTEM

A. A guide rail system shall be used to mount each mixer during operation and to guide the units during installation and removal for service. The system shall consist of a bottom assembly, mixer support assembly, guide rail (mast), upper support and positioning device, and a lifting cable. The system shall be fixed at the bottom of the tank in a pivot which shall allow horizontal rotation of the mast through not less than 120 degrees. All guides and brackets shall be constructed of AISI 316 stainless steel. The mast bearings shall be constructed of Hostaform (POM) or other plastic material. Power/control cable holders shall be provided every five feet.

B. The bottom assembly shall be bolted to the floor of the tank, and provide support for the guide rail. The bottom console and guide pipe shall be constructed of AISI 316Ti stainless steel.

C. The assembly shall be strong enough to support the weight of the mixer, the guide rail and the mixer preload force. The assembly shall be positioned in such a manner so as to prevent the mixer blade tips from hitting the basin floor or aeration equipment, where present. The mixer support shall be constructed of AISI 316 stainless steel.

D. The upper guide holder assembly shall secure the system to the tank wall as shown on the Drawings. It shall also provide the lateral support for the guide rail. The assembly shall contain a location to secure the electrical motor cable holder.

E. Provide mixer supports designed to be bolted to the underside of the mixer and rest on the basin floor. Where indicated on the Drawings, provide a support clamp designed to support the mixer several feet off the basin floor.

F. Mixer support frame (including angular adjustment brackets) shall be manufactured from: AISI 316 Stainless Steel as detailed in the submersible mixer tabulated data listing above.

G. Provide a Type 316 stainless steel lifting cable for each mixer. The cable shall be permanently fixed to the equipment and tied off near the davit crane bases. Cable assembly shall be adequate for the equipment weight, basin depth and davit crane size, and compatible with the winch. The cable must be rated for the same lifting capacity as the davit crane.

H. A stainless steel identification plate shall be securely mounted on the equipment in a readily visible location. The plate shall bear equipment model number and general nameplate information.

I. Stainless steel concrete anchor bolts shall be in conformance with Section 055000, METAL FABRICATIONS-WWTP. Coordinate required size with Manufacturer and final shop drawings. The mixer Manufacturer shall provide a template for proper location of anchor bolts. Anchor bolts shall be provided by the Contractor.

J. Equipment weighing over 100 pounds shall be provided with lifting lugs.

2.10 SPARE PARTS AND SPECIAL TOOLS

A. All spare parts and special tools required to maintain operation of the mixers shall be provided. At a minimum, the following spare parts and special tools shall be furnished. All parts and tools shall be suitably marked and packed in a single, hinged-cover box for each mixer model.
   1. One (1) spare propeller for each mixer model and horsepower.
   2. Two (2) sets of seals and bearings for complete seal and bearing replacement for each model and horsepower.
   3. One (1) O-ring kit for complete O-ring replacements for each mixer.
   4. One (1) set of any special tools required for maintenance and operation.

PART 3 - EXECUTION

3.1 PREPARATION FOR SHIPMENT, STORAGE, AND PROTECTION

A. Equipment and materials shall be prepared and protected for shipment and shipped in accordance with the requirements of Division 01, GENERAL CONDITIONS.

B. The contractor shall be responsible for receiving the equipment, unloading it from the common carrier, and storing it safely until it is ready to be installed.

3.2 INSTALLATION

A. Mixers shall be installed in accordance with the Manufacturer's recommendations and the installation shall be certified by the Manufacturer as specified herein.

3.3 FACTORY TESTS

A. Mixers shall be factory tested for proper alignment, quiet operation, proper connections, pumping capacity (calculated based on measured thrust), and satisfactory performance. Provide written certification of these tests to the Engineer prior to shipping the mixers.

B. At a minimum, the mixer Manufacturer shall perform the following inspections and tests on each mixer before shipment:
   1. An insulation test of the windings and balancing of the rotor.
   2. A test of the mixer motor (run dry for 5 minutes at full load) to check electrical data measurements.
   3. A submerged test of the mixer.
   4. A motor and cable insulation test for moisture content and insulation defects.
   5. A check of the mixer (run dry) to establish correct rotation and mechanical integrity.
   6. A check of propeller, motor rating, and electrical connections for compliance with these specifications.

3.4 FIELD TESTING

A. Field Testing:
   1. Coordinate Manufacturer’s field services and equipment testing with Owner:
      a. Notify Owner when equipment is ready for installation and alignment, installation check, start-up, and testing.
      b. Representative of Owner or Engineer to be present during all visits by Manufacturer’s representative.

c. Do not start up or test mixers until Manufacturer’s representative has approved the installation.

2. Functional Test: Prior to plant startup, all equipment shall be inspected for proper alignment, quiet operation, proper connection, and satisfactory performance.
   a. Functional testing shall be performed in clean water. The Owner shall provide potable water necessary to conduct the tests at no cost to the Contractor. The clean water test shall be performed under operating conditions for a minimum of 24 hours with the basins full of water. Contractor shall demonstrate that guide rails (masts) and mounting bracket assemblies are free from vibration of any kind, that the mixers are maintained in their set position at all times, and that the mixers move easily up and down the mast without binding.

3.5 MANUFACTURER'S CERTIFICATE

A. Provide Manufacturer's certificate of proper installation
   1. Certificate shall include all results and testing data recorded during field testing.

END OF SECTION

SECTION 432321 – RECLAIMED EFFLUENT PUMPING SYSTEMS – WWTP

PART 1 - GENERAL

1.1 WORK INCLUDED

A. This section covers the work necessary to furnish and install, complete, the end suction centrifugal pumps and accessories for the Hospital WWTP and Hon-Dah WWTP. It is the intent of this specification that a complete system be furnished and installed. The pump manufacturer or supplier shall provide all pumps and other accessories, complete.

B. All equipment shall be compliant with Federal Acquisition Register the clause 52.225-11, Buy American-Construction Materials under Trade Agreements (Nov 2023) and provision 52.225-12, Notice of Buy American Requirement-Construction Materials under Trade Agreements (May 2014).

C. Related Sections:

1. Section 461155.04, PCN: EFFLUENT PUMPING SYSTEM-WWTP
2. Division 40, PROCESS INTERCONNECTIONS-WWTP
3. Division 26, ELECTRICAL-WWTP
4. BP2 AND BP3 P&ID Drawings

1.2 EQUIPMENT NUMBERS

A. The equipment covered under this specification are:

Equipment Description	Hospital WWTP Equipment Numbers	Hon-Dah WWTP Equipment Numbers
Reclaimed Effluent Pump Station Pump 1	1920-P-01	2920-P-01
Reclaimed Effluent Pump Station Pump 2	1920-P-02	2920-P-02

1.3 DEFINITIONS

A. Total Dynamic Head (TDH). Total dynamic head shall be the pressure in feet measured at the centerline of the pump discharge flange, and shall be the head in feet of liquid to be supplied by the pump.

B. Overall Efficiency. Overall efficiency shall include pump and motor efficiencies, taking into account pump friction and pump discharge pipe elbow losses.

1.4 GENERAL REQUIREMENTS

A. Like items of equipment provided hereunder shall be the end product of the same manufacturer in order to achieve standardization of operation, maintenance, spare parts and manufacturer's services; and shall include all necessary appurtenances for a complete and working system. The equipment shall be the product of a manufacturer regularly engaged in the production of equipment for the specified use. The manufacturer shall have the sole responsibility for the proper functioning and coordination of the equipment as furnished.

B. See the GENERAL CONDITIONS and Division 01, GENERAL REQUIREMENTS, which contain information and requirements that apply to the work specified herein and are mandatory for this project.

1.5 MANUFACTURER'S SERVICES

A. The pump manufacturer shall provide the services of a qualified representative for the equipment specified for installation assistance, inspection and certification of the installation, equipment testing, startup assistance, and training of Owner's personnel.

B. Also see Section 019113, GENERAL COMMISSIONING REQUIREMENTS in Division 01, GENERAL REQUIREMENTS.

C. A qualified manufacturer's representative shall be one who has had at least two years' experience in the installation of the types of pumps specified.

D. The manufacturer’s representative for the equipment specified herein shall be present at the jobsite and/or classroom designated by the Owner for the minimum person-days listed, travel time excluded. For each WWTP, the following services shall be provided in a minimum of two trips:
   1. ½ person-day for installation assistance, inspection, and certification of the installation.
   2. ½ person-day for functional and performance testing.
   3. ½ person-day for pre-startup classroom or jobsite training.

E. Startup services and training of Owner’s personnel shall be at such times as requested by the Owner.

F. Submit a certification of proper installation and satisfactory performance as specified in Part 3 of these Specifications.

1.6 QUALITY ASSURANCE

A. All equipment specified herein shall be furnished by one Supplier including all necessary appurtenances for a complete and working system. The Supplier shall have sole-source responsibility for the coordination and functionality of all system components.

B. Equipment Suppliers shall have at least 5 years of design and manufacturing experience with pump systems and appurtenances specified herein, with no less than twenty (20) similar units installed within the US in similar applications.

1.7 SUBMITTALS

A. Submittals shall be made as required in Section 013300, SUBMITTAL PROCEDURES in Division 01, GENERAL REQUIREMENTS. In addition, the information summarized below shall be provided.

B. Shop Drawings shall include performance data curves showing head, capacity, horsepower demand, and pump efficiency over the entire operating range of the pump, from shutoff to maximum capacity. The equipment manufacturer shall indicate separately the head, capacity, horsepower demand, overall efficiency, and minimum submergence required at the guarantee point. Performance requirements shall be as defined in the Hydraulic Institute Standards.

C. Complete specifications, descriptive literature, dimensional drawings, assembly cuts, and materials of construction for all equipment and devices to be furnished under this specification section.

D. Make, model, and weights for all pumps, and motors.

E. Motor manufacturers' guaranteed power factor and minimum efficiencies at three operating points within in the operational range, including the minimum, maximum and best efficiency point.

F. Complete connection diagrams.

G. Proposed factory and field test descriptions in sufficient detail to fully describe the specific tests to be conducted and quantities to be measured to demonstrate full conformance with these Specifications.

H. A complete set of manufacturer's instructions covering storage, installation, operation, lubrication, and maintenance shall be available at the jobsite no later than the date the pumps are received. This requirement is in addition to O&M manuals as specified in Section 017823, OPERATION AND MAINTENANCE DATA.

I. Certified copy of test report for identical motor tested in accordance with NEMA MG 1-12.53a and IEEE Standard 112, Test Method B, showing full load efficiency not less than specified value; motors not as specified will be rejected.

J. Motor Tests and Test Reports:
   1. Short commercial tests shall be made, including no-load current at rated voltage, high potential, and locked rotor current.
   2. Copies of test reports for actual motor being provided.

K. Complete motor rating and list of special motor features being provided.

1.8 OPERATION AND MAINTENANCE MANUALS

A. Operation and Maintenance (O&M) Manuals for the equipment specified herein shall be furnished as specified in Section 017823, OPERATION AND MAINTENANCE DATA. Submit information from the pump manufacturer and the motor manufacturer.

B. The O&M manuals shall contain, at a minimum, full descriptions of all equipment specified herein, motor data, spare parts lists, and detailed instructions for all operation and maintenance tasks to be performed by the operator.

C. A spare manual shall be shipped with the equipment in order to allow for proper installation and operation of the equipment prior to the release of all final installation, operation, and maintenance manuals.

1.9 WARRANTY

A. The Manufacturer shall warrant that its equipment shall be free from defects in material and workmanship; and that it will replace or repair, any part or parts for which examination shall show to have failed under normal use and service by the Owner within five (5) years following the date of Substantial Completion. The five-year warranty shall at a minimum:
   1. Provide 100 percent coverage for the first 18 months.
   2. Provide 50 percent coverage from 19 months to 39 months.
   3. Provide 25 percent coverage from 40 to 60 months.

B. The Manufacturer shall be responsible for freight associated with shipping defective equipment to the factory.

C. This warranty shall not be encumbered nor limited by the number of hours of equipment operation time. Warranties that restrict coverage to operating conditions or limitations on hours of operation time are not acceptable.
   1. The warranty shall provide for the Supplier to bear the full cost of labor and materials for replacement and/or repair of faulty or defective components including shipping so there shall be no cost incurred by the Owner for this work during the warranty period except as provided by prorated warranty terms.
   2. The Supplier's warranty policy is amended only by the items considered consumables, i.e., pump seals, pump packing, lubricants and other maintenance items consumed by usage.

1.10 REFERENCE SPECIFICATIONS, CODES AND STANDARDS

A. All motors and/or electrical equipment shall be designed and constructed in complete accordance with the latest edition and revision of all applicable codes and regulations, including the following:

1. Institute of Electrical and Electronic Engineers (IEEE)
2. National Electrical Suppliers Association (NEMA)
3. National Electrical Code (NEC)

B. All mechanical components shall be designed and constructed in accordance with the latest edition and revision of all applicable codes and regulations, including the following:
1. National Bureau of Standards (NBS)
2. American Society for Testing Materials (ASTM)
3. American National Standards Institute (ANSI)
4. American Society of Mechanical Engineers (ASME)
5. American Water Works Association (AWWA)

C. Performance requirements shall be as defined in the Hydraulic Institute Standards.

1.11 DESIGN CONDITIONS

A. The effluent pump system will pump treated wastewater to a reuse storage tank for use around the site as irrigation or for water features, located at a higher elevation than the treatment plant.

PART 2 - PRODUCTS

2.1 GENERAL

A. "Basis-of-Design Products:" The first named Manufacturer's system was used as the Basis of Design for this Specification and the Drawings. The structures and facilities appurtenant to the pumps shall meet the basis of design in quality and capacity. Equipment furnished by all qualified, interested Manufacturers will be considered, provided the necessary structural, electrical, and mechanical changes are submitted in conformance with the requirements of the GENERAL CONDITIONS and DIVISION 1, GENERAL REQUIREMENTS. The Contractor shall be responsible for all design changes associated with other Manufacturers' equipment and shall bear all costs for necessary changes for a complete and satisfactory installation.

B. Electrical and controls materials and workmanship required to complete the work under this section shall also conform to the applicable requirements of Division 26, ELECTRICAL-WWTP.

C. The head-capacity curve shall have a steady rise in head from maximum to minimum flow within the preferred operating region. The shut-off head shall be a minimum of 20% higher than the head at the best efficiency point.

2.2 PUMP MANUFACTURERS AND MODELS

A. Grundfos Paco 30707

B. Goulds e-SH

C. Or approved equal.

2.3 SERVICE CONDITIONS

A. Pumps will handle treated wastewater directly after filtration and UV disinfection. Water will be pumped to an above grade water tank for use around the site as irrigation or for water features.

B. Pumps shall be designed dry well installation an shall be designed to operate continuously.

C. Pump Elevation
1. Hospital WWTP: 5,630 feet ASL
2. Hon-Dah WWTP: 7,160 feet ASL

D. System Curve for the Hospital WWTP Reclaimed Effluent Pump:
1. One Pump: 52 gpm @ 26.3 ft; 105 gpm @ 27.1 ft; 157 gpm @ 28.5 ft; 199 gpm @ 30 ft; 217 gpm @ 28.6 ft; 262 gpm @ 32.9 ft.

E. System Curve for the Hon-Dah WWTP Reclaimed Effluent Pump:
1. One Pump: 17 gpm @ 18.1 ft; 61 gpm @ 18.9 ft; 121 gpm @ 21.4 ft; 173 gpm @ 24.8 ft; 217 gpm @ 28.6 ft.

2.4 DESIGN CONDITIONS

A. Pump design conditions for each WWTP are:

Design Parameter	Hospital WWTP Design Criteria	Hon-Dah WWTP Design Criteria
Number	1920-P-01 1920-P-02	2920-P-01 2920-P-02
Design Point Flow Total Dynamic Head (TDH)	262 GPM 33 FEET	217 GPM 30 FEET
Minimum Overall Efficiency at Design Point	77 percent	77 percent
Minimum NPSH Available	16 feet	16 FEET
Maximum Nominal Speed	1,800 rpm	
Liquid Pumped Specific Gravity	1.0	
Maximum Size Intake Connection Diameter	4 INCHES	
Maximum Size Discharge Connection Diameter	3 INCHES	
Motor Drive	Variable Frequency Drive	
Motor Nominal Speed	1800 rpm	
Maximum Rated Horsepower	5 hp	
Power Supplied	3 phase, 480 volt, 60 Hz	

2.5 PUMP CONSTRUCTION

A. General:
1. Pump Type: Heavy duty, horizontal, end suction centrifugal with electric motor. Rotation of all like pumps shall be the same.
2. Pump and drive fitted on common adjustable base, made from stainless steel. Coupling guard shall be according to OSHA standards and shall be painted orange.

B. Pump Construction:
1. The pump casing shall be manufactured in a single block constructed of cast iron ASTM A48 grade 30. Multiple piece design pump casings held together by screw connections are not acceptable.
2. The volute shall be of a single piece design and shall have smooth fluid passages large enough at all points to pass any size solid which can pass through the impeller. The pump volute shall be made of ASTM A48 Class 30 gray cast iron or equivalent gray cast iron.

C. Pump Impeller:
1. The impeller(s) shall be of hardened stainless steel ASI-304H. The impeller vane leading edges shall be mechanically self-cleaned to keep them clear of debris, maintaining an unobstructed impeller leading edge and sustaining a high level of hydraulic efficiency. Impellers shall be locked to the shaft, held by an impeller key and treated with a corrosion inhibitor.

D. Pump Shaft:
1. Shaft material shall be steel AISI-1040
2. The impeller/shaft connection shall be lubricated with quench fluid of the volute chamber.

E. Mechanical Seals:
1. The pumps shall be fitted with double maintenance free, mechanical seals with carbon seal rings and ceramic seals. The seals shall be operating in a common oil-filled intermediate chamber (Quench for lubrication and cooling). Purge systems for the seals are not acceptable.

2.6 DRIVE MOTOR CHARACTERISTICS

A. Drive motor(s) shall be designed, manufactured, and tested in accordance with the latest revised edition of NEMA MG 1. The motors shall be squirrel-cage, suitable for adjustable speed drives. Motor's horsepower shall be as specified above. The motor nameplate horsepower rating shall not be exceeded at any head-capacity point on the pump curve. The motor shall be premium energy-efficient type with guaranteed minimum full-load efficiency of 89.5 percent. The motors shall conform to the following:

Synchronous Speed	Match driven equipment
Slip	3 percent maximum at full load.
Voltage, Phase, and Frequency	460 volts, 3-phase, 60 Hz.
Mounting	Horizontal.
Enclosure	Totally Enclosed Fan Cooled
Service Factor	1.15
Duty Cycle	Continuous
Ambient Temperature Rating	40 degrees C.
Starting Method	VFD, forward and reverse
Starting current	NEMA Code G.
Bearing Lubrication	Manufacturer's standard.
Bearing Life	100,000 hours minimum rating life as defined by AFBMA standards.
Coupling	As provided by the pump manufacturer.

B. Provide motor modifications and accessories as follows:
1. Drains and breathers for moisture removal. Provide weep holes and drain plugs for all TEFC motors.
2. Continuous operation at rated horsepower and full-service factor at elevations specified above.
3. Screens over all air openings.
4. Sealed winding insulation.
5. Thermal protection system consisting of thermistors and a monitoring relay Three thermistors shall be embedded in the coils, one in each phase, protecting the stator windings from damaging temperatures. A thermistor monitoring relay operating at 120 volts shall be mounted in a NEMA 4 enclosure mounted near the main conduit box where it does not obstruct access to that box, or in control panel. Coordinate with the Division 26, ELECTRICAL-WWTP subcontractor. A monitoring relay contact for external use, rated 5 amps, 120 volts minimum, shall close automatically on abnormally high thermistor temperature, and open automatically when the winding temperature has returned to a non-damaging level.
6. Grounding terminal box for entrance of conduits, sizes as shown on the Drawings.

2.7 ELECTRICAL AND CONTROLS

A. Pump control shall be provided by the Plant Control System (PCS) as described in Section 406120, PROCESS CONTROL NARRATIVES-WWTP.

2.8 PUMP ACCESSORIES

A. Anchor Bolts: Unless otherwise indicated, all anchor bolts shall be provided by the Contractor. Provide Type 316 stainless steel anchor bolts, 3/4-inch diameter minimum, for mounting pump discharge connection elbow. Length shall be adequate for conditions shown on the Drawings, through the grout fill and for at least 6-inches embedment into the precast manhole base.

B. Skid Frame: Frame components shall be of stainless steel construction using stainless steel mounting hardware.

C. Lifting lugs shall be provided for pump and any other equipment or items weighing over 100 pounds.

2.9 SPARE PARTS

A. For each pump supplied, provide a set of manufacturer standard spare parts kit, which should include at a minimum
   1. One (1) set of O rings
   2. One (1) set of bearings
   3. One (1) mechanical seal

B. Provide two (2) complete sets, one for the Hospital WWTP and one for the Hon-Dah WWTP, of any special tools required to dismantle and perform maintenance on the pumps.

PART 3 - EXECUTION

3.1 PREPARATION FOR SHIPMENT, SHIPMENT, AND PROTECTION

A. Equipment shall be prepared and protected for shipment and shipped in accordance with the requirements of Section 016000, PRODUCT REQUIREMENTS of Division 01, GENERAL REQUIREMENTS. In addition, the following shall be done:
   1. After testing and before dismantling for shipment, all wiring and mechanical connections shall be matchmarked or tagged to ensure proper field assembly.
   2. The Contractor shall make arrangements for extra protection until final installation if units are to be stored outside.

3.2 GENERAL

A. Care during storage and procedures for installation, lubrication and startup of the pumps and motors shall be in strict conformance with the manufacturer's instructions. In addition, the instructions for installation, operation and maintenance from the Hydraulic Institute Standards shall be adhered to where applicable.

3.3 PUMP AND DRIVER EQUIPMENT INSTALLATION

A. Install the pumps and accessories in accordance with the pump manufacturer's directions, the Drawings, and these Specifications. The pump installation shall be supervised by a manufacturer's representative and shall be approved by this representative prior to operating pumps.

B. Handle carefully and protect the pump and appurtenances to avoid damaging the equipment. Install the pumps so that connection may be made to the discharge headers without any springing or otherwise forcing either the pump or the header. Adjust pump assemblies such that the units are properly aligned, plumb, and level. Carefully fit and coat all bolt threads with lubricant to facilitate future removal.

C. After the pump discharge elbow bases have been set in position, aligned, and shimmed to the proper elevation, grout the space between the bottom of the baseplate and the concrete foundation with a poured, non-shrinking grout of the proper category, prepared and installed in accordance with Section 033000, CAST IN PLACE CONCRETE-WWTP.

D. All strain from attached piping shall be eliminated from the pumps. Any evidence of pump misalignment, noisy operation, or other signs of improper setting shall be corrected by the Contractor.

E. The equipment shall be provided with all necessary factory lubrication. Before initial startup at final installation, lubrication for all bearings, etc. shall be checked in accordance with the pump and/or motor manufacturer's recommendations.

3.4 PAINTING

A. All shop and field painting shall be done with manufacturer standard coating for domestic wastewater applications approved by the Engineer.

3.5 FIELD TESTS

A. Functional Test: Prior to plant or pump station startup, all equipment described herein shall be inspected for proper alignment, quiet operation, proper connection, and satisfactory performance by means of a functional test.

B. Vibration Test: The complete assembly, consisting of the driving unit and pump, connected and in normal operation, shall not develop amplitudes of vibration exceeding limits recommended by the current edition of Hydraulic Institute Standards.

C. Performance Test:
   1. The Contractor, with the assistance of the pump manufacturer's representative, shall perform field performance tests on both of the pump assemblies to demonstrate their conformance to the Specifications to the satisfaction of the Engineer. A test log shall be presented to the Engineer upon the completion of each test that records the following:
      a. Flow, as measured by plant instrumentation and/or storage volumes.
      b. Pump discharge pressures as measured by calibrated gauges and converted to feet of the liquid pumped and corrected to pump centerline, calculated velocity heads at the discharge flange, and total head, all tabulated in feet.
      c. Driving motor voltage and amperage measured for each phase.
      d. Motor manufacturer's guaranteed power factor and efficiency at three operating points within operational range, ideally minimum, maximum and best efficiency point.
   2. Units failing to meet the Specifications to the satisfaction of the Engineer must be replaced or more accurately tested in accordance with Hydraulic Institute Standards. If the pump fails the second test, the unit will be rejected, and the Contractor shall furnish a unit that will perform as specified. In addition, if only one pump is tested and the specified pump fails the second test, all identical pumps covered by the Detail Pump Specification for the pump under test shall be tested under the same provisions, whether specified or not, at the Contractor's sole expense. Testing and pump replacement shall be accomplished at no additional cost to the Owner.

3.6 MANUFACTURER'S CERTIFICATE(S)

A. Provide manufacturer's certificate(s) in accordance with Section 019113, GENERAL COMMISSIONING REQUIREMENTS of Division 01, GENERAL REQUIREMENTS. The certificate shall show:
   1. That the handling of pump equipment was satisfactory to the manufacturer.
   2. The installation is as specified and is acceptable to the manufacturer.
   3. Include all results and testing data recorded during field testing.

END OF SECTION

SECTION 432331 – NPW PUMPING SYSTEMS – WWTP

PART 1 - GENERAL

1.1 WORK INCLUDED

A. This section covers the work necessary to furnish and install inline vertical multistage centrifugal pump skids and accessories for the Hospital WWTP and Hon-Dah WWTP. This package consists of self-contained skid complete with VFDs, control panel, and pressure sensors designed to supply a constant pressure to the NPW system. The pump manufacturer or supplier shall provide all pumps and other accessories, complete.

B. All equipment shall be compliant with Federal Acquisition Register the clause 52.225-11, Buy American-Construction Materials under Trade Agreements (Nov 2023) and provision 52.225-12, Notice of Buy American Requirement-Construction Materials under Trade Agreements (May 2014).

C. Related Sections:

1. Section 432331.01, PCN: NON-POTABLE WATER SYSTEM-WWTP
2. Division 40, PROCESS INTERCONNECTIONS-WWTP
3. Division 26, ELECTRICAL-WWTP
4. BP2 AND BP3 P&ID Drawings

1.2 EQUIPMENT NUMBERS

A. The equipment covered under this specification are:

Equipment Description	Hospital WWTP Equipment Numbers	Hon-Dah WWTP Equipment Numbers
Non Potable Water Pump 1	1810-P-01	2810-P-01
Non Potable Water Pump 2	1810-P-02	2810-P-02
Pressure Switch Low	PSL-1810-01	PSL-2810-01
Pressure Switch Low	PSL-1810-02	PSL-2810-02
Pressure Indicating Transmitter	PIT-1810-01	PIT-2810-01
Pressure Gauge	PI-1810-01	PI-2810-01
System Pressure Switch Low	PSL-1810-03	PSL-2810-03
System Pressure Switch High	PSH-1810-01	PSH-2810-01
Local Control Panel	LCP-1810-01	LCP-2810-01

1.3 DEFINITIONS

A. Total Dynamic Head (TDH). Total dynamic head shall be the pressure in feet measured at the centerline of the pump discharge flange, and shall be the head in feet of liquid to be supplied by the pump.

B. Overall Efficiency. Overall efficiency shall include pump and motor efficiencies, taking into account pump friction and pump discharge pipe elbow losses.

1.4 GENERAL REQUIREMENTS

A. Like items of equipment provided hereunder shall be the end product of the same manufacturer in order to achieve standardization of operation, maintenance, spare parts and manufacturer's services; and shall include all necessary appurtenances for a complete and working system. The equipment shall be the product of a manufacturer regularly engaged in the production of equipment for the specified use. The manufacturer shall have the sole responsibility for the proper functioning and coordination of the equipment as furnished.

B. See the GENERAL CONDITIONS and Division 01, GENERAL REQUIREMENTS, which contain information and requirements that apply to the work specified herein and are mandatory for this project.

1.5 MANUFACTURER'S SERVICES

A. The pump manufacturer shall provide the services of a qualified representative for the equipment specified for installation assistance, inspection and certification of the installation, equipment testing, startup assistance, and training of Owner's personnel.

B. Also see Section 019113, GENERAL COMMISSIONING REQUIREMENTS in Division 01, GENERAL REQUIREMENTS.

C. A qualified manufacturer's representative shall be one who has had at least two years' experience in the installation of the types of pumps specified.

D. Startup services and training of Owner's personnel shall be at such times as requested by the Owner.

E. Submit a certification of proper installation and satisfactory performance as specified in Part 3 of these Specifications.

1.6 SUPPLIERS SERVICES

A. Supplier's services shall be provided in accordance with the following:
   1. A qualified Supplier's representative of the equipment specified shall be available at the jobsite for installation assistance, inspection and certification of the installation, equipment testing, startup assistance, and training of Owner's personnel for the minimum person-days for the services herein, travel time excluded. Provide the following services for each WWTP in a minimum of two trips:
      a. 1½ person-day for installation assistance, inspection and certification of the installation, and functional and performance testing of the pumps, valves, instrumentation, and controls.
      b. ½ person-day for pump system startup and Owner training
   2. A qualified Supplier's representative shall be one who has had at least 2 years of experience in the installation and startup of the equipment specified herein.
   3. Startup services and training of Owner's personnel shall be at such times as requested by the Owner.
      a. Engineer and Owner will be present at that time and develop a punch list of items to be completed before Final Completion.

1.7 QUALITY ASSURANCE

A. All equipment specified herein shall be furnished by one Supplier including all necessary appurtenances for a complete and working system. The Supplier shall have sole-source responsibility for the coordination and functionality of all system components.

B. Equipment Suppliers shall have at least 5 years of design and manufacturing experience with pump systems and appurtenances specified herein, with no less than twenty (20) similar units installed within the US in similar applications.

1.8 SUBMITTALS

A. Submittals shall be made as required in Section 013300, SUBMITTAL PROCEDURES in Division 01, GENERAL REQUIREMENTS. In addition, the information summarized below shall be provided.

B. Shop Drawings shall include performance data curves showing head, capacity, horsepower demand, and pump efficiency over the entire operating range of the pump, from shutoff to maximum capacity. The equipment manufacturer shall indicate separately the head, capacity, horsepower demand, overall efficiency, and minimum submergence required at the guarantee point. Performance requirements shall be as defined in the Hydraulic Institute Standards.

C. Complete specifications, descriptive literature, dimensional drawings, assembly cuts, and materials of construction for all equipment and devices to be furnished under this specification section.

D. Make, model, and weights for all pumps, and motors.

E. Motor manufacturers' guaranteed power factor and minimum efficiencies at three operating points within in the operational range, including the minimum, maximum and best efficiency point.

F. Complete connection diagrams.

G. Proposed factory and field test descriptions in sufficient detail to fully describe the specific tests to be conducted and quantities to be measured to demonstrate full conformance with these Specifications.

H. Certified copy of test report for identical motor tested in accordance with NEMA MG 1-12.53a and IEEE Standard 112, Test Method B, showing full load efficiency not less than specified value; motors not as specified will be rejected.

I. Motor Tests and Test Reports:
   1. Short commercial tests shall be made, including no-load current at rated voltage, high potential, and locked rotor current.
   2. Copies of test reports for actual motor being provided.

J. Complete motor rating and list of special motor features being provided.

1.9 OPERATION AND MAINTENANCE MANUALS

A. Operation and Maintenance (O&M) Manuals for the equipment specified herein shall be furnished as specified in Section 017823, OPERATION AND MAINTENANCE DATA. Submit information from the pump manufacturer and the motor manufacturer.

B. The O&M manuals shall contain, at a minimum, full descriptions of all equipment specified herein, motor data, spare parts lists, and detailed instructions for all operation and maintenance tasks to be performed by the operator.

C. A spare manual shall be shipped with the equipment in order to allow for proper installation and operation of the equipment prior to the release of all final installation, operation, and maintenance manuals.

1.10 WARRANTY

A. The Manufacturer shall warrant that its equipment shall be free from defects in material and workmanship; and that it will replace or repair, any part or parts for which examination shall show to have failed under normal use and service by the Owner within five (5) years following the date of Substantial Completion. The five-year warranty shall at a minimum:
   1. Provide 100 percent coverage for the first 18 months.
   2. Provide 50 percent coverage from 19 months to 39 months.
   3. Provide 25 percent coverage from 40 to 60 months.

B. The Manufacturer shall be responsible for freight associated with shipping defective equipment to the factory.

C. This warranty shall not be encumbered nor limited by the number of hours of equipment operation time. Warranties that restrict coverage to operating conditions or limitations on hours of operation time are not acceptable.
   1. The warranty shall provide for the Supplier to bear the full cost of labor and materials for replacement and/or repair of faulty or defective components including shipping so there shall be no cost incurred by the Owner for this work during the warranty period except as provided by prorated warranty terms.
   2. The Supplier's warranty policy is amended only by the items considered consumables, i.e., pump seals, pump packing, lubricants and other maintenance items consumed by usage.

1.11 REFERENCE SPECIFICATIONS, CODES AND STANDARDS

A. All motors and/or electrical equipment shall be designed and constructed in complete accordance with the latest edition and revision of all applicable codes and regulations, including the following:
   1. Institute of Electrical and Electronic Engineers (IEEE)
   2. National Electrical Suppliers Association (NEMA)
   3. National Electrical Code (NEC)

B. All mechanical components shall be designed and constructed in accordance with the latest edition and revision of all applicable codes and regulations, including the following:
   1. National Bureau of Standards (NBS)
   2. American Society for Testing Materials (ASTM)
   3. American National Standards Institute (ANSI)
   4. American Society of Mechanical Engineers (ASME)
   5. American Water Works Association (AWWA)

1.12 DESIGN CONDITIONS

A. The non-potable water system is served from the treated effluent. The system will supply water to the headworks, solids handling, and hose bibs through the treatment plant.

PART 2 - PRODUCTS

2.1 GENERAL

A. “Basis-of-Design Products:” The first named Manufacturer’s system was used as the Basis of Design for this Specification and the Drawings. The structures and facilities appurtenant to the pumps shall meet the basis of design in quality and capacity. Equipment furnished by all qualified, interested Manufacturers will be considered, provided the necessary structural, electrical, and mechanical changes are submitted in conformance with the requirements of the GENERAL CONDITIONS and DIVISION 1, GENERAL REQUIREMENTS. The Contractor shall be responsible for all design changes associated with other Manufacturers’ equipment and shall bear all costs for necessary changes for a complete and satisfactory installation.

B. Electrical and controls materials and workmanship required to complete the work under this section shall also conform to the applicable requirements of Division 26, ELECTRICAL.

C. The head-capacity curve shall have a steady rise in head from maximum to minimum flow within the preferred operating region. The shut-off head shall be a minimum of 20% higher than the head at the best efficiency point.

D. Nameplates with the name of the Manufacturer, equipment model number and all other pertinent data shall be affixed at a visible and accessible location on all equipment.

2.2 PUMP MANUFACTURERS AND MODELS

A. Goulds 22SV4

B. Grundfos Hydro MPC

C. Or approved equal.

2.3 SERVICE CONDITIONS

A. Pumps will handle treated wastewater directly after filtration and UV disinfection. Water will be supplied to a distribution system at 100 psi from the pumps, as demands increase the integrated VFD will increase the speed maintaining the discharge pressure.

B. Pumps shall be designed for a dry well installation an shall be designed to operate continuously even though the pumps will be operated in a duty/standby configuration.

C. Pump Elevation
1. Hospital WWTP: 5,630 feet ASL
2. Hon-Dah WWTP: 7,160 feet ASL

2.4 DESIGN CONDITIONS

A. Pump design conditions for each WWTP are:

Design Parameter	**Hospital WWTP Design Criteria**	**Hon-Dah WWTP Design Criteria**
Number	1810-P-01 1810-P-02	2810-P-01 2810-P-02
Pump Operation	Duty, Standby	Duty, Standby
Design Point Flow Total Dynamic Head (TDH)	100 GPM 231 FEET	100 GPM 231 FEET
Minimum Overall Efficiency at Design Point	72 percent	72 percent
Minimum NPSH Available	38 feet	38 FEET
Maximum Nominal Speed	3,500 rpm	
Liquid Pumped Specific Gravity	1.0	
Maximum Size Intake Connection Diameter	2 INCHES, ANSI Flange	
Maximum Size Discharge Connection Diameter	2 INCHES, ANSI Flange	
Pump Layout	In-line Discharge and Suction Ports	
Motor Drive	Variable Frequency Drive	
Motor Nominal Speed	1800 rpm	
Horsepower	15 hp	
Power Supplied	3 phase, 480 volt, 60 Hz	

2.5 PUMP CONSTRUCTION

A. General:
1. Pump Type: Vertical inline, Multi-stage, Centrifugal pump with integrated close coupled electric motor. Rotation of all like pumps shall be the same.
2. Pumps supplied with integrated VFD and pressure based control panel.
3. Pumps and drive fitted on common adjustable base, made from coated steel. Coupling guard shall be according to OSHA standards and shall be painted orange.

B. Pump Construction:
1. The pump casing shall be manufactured in a single block constructed of cast iron ASTM A48 grade 35/40B.

2. The volute shall be of a single piece design and shall have smooth fluid passages large enough at all points to pass any size solid which can pass through the impeller. The pump volute shall be made of ASTM A48 Class 30 gray cast iron or equivalent gray cast iron.

C. Pump Impeller:
1. The impeller(s) shall be of stainless steel ASI-304. The impeller vane leading edges shall be mechanically self-cleaned to keep them clear of debris, maintaining an unobstructed impeller leading edge and sustaining a high level of hydraulic efficiency.

D. Pump Shaft:
1. Shaft material shall be steel AISI-316
2. The impeller/shaft connection shall be lubricated with quench fluid of the volute chamber.

E. Mechanical Seals:
1. The pumps shall be fitted with single maintenance free, mechanical seals with carbon seal rings, silicon carbide faces, and Viton elastomers. The seal shall be cooled by process flow from the volute chamber.

2.6 PIPING AND VALVES

A. The pump skid supplier shall provide piping and valves as per their manufacturing standard. Couplings to connect to plant piping shall be provided. Plant piping will be PVC SCH80 piping.

2.7 DRIVE MOTOR CHARACTERISTICS

A. Drive motor(s) shall be designed, manufactured, and tested in accordance with the latest revised edition of NEMA MG 1. The motors shall be squirrel-cage, suitable for adjustable speed drives. Motor's horsepower shall be as specified above. The motor nameplate horsepower rating shall not be exceeded at any head-capacity point on the pump curve. The motor shall be premium energy-efficient type with guaranteed minimum full-load efficiency of 89.5 percent. The motors shall conform to the following:

Synchronous Speed	3,500 rpm maximum to match driven equipment
Slip	3 percent maximum at full load.
Voltage, Phase, and Frequency	460 volts, 3-phase, 60 Hz.
Mounting	Vertical
Enclosure	Totally Enclosed Fan Cooled
Service Factor	1.15
Duty Cycle	Continuous
Ambient Temperature Rating	40 degrees C.
Starting Method	VFD, forward and reverse
Starting current	NEMA Code G.
Bearing Lubrication	Manufacturer's standard.
Bearing Life	100,000 hours minimum rating life as defined by AFBMA standards.
Coupling	As provided by the pump manufacturer.

B. Provide motor modifications and accessories as follows:
1. Integrated VFD controlled by suppliers PLC to maintain a constant set system pressure.
2. Drains and breathers for moisture removal. Provide weep holes and drain plugs for all TEFC motors.

3. Continuous operation at rated horsepower and full-service factor at elevations specified above.
4. Sealed winding insulation.
5. Thermal protection system consisting of thermistors and a monitoring relay Three thermistors shall be embedded in the coils, one in each phase, protecting the stator windings from damaging temperatures. A thermistor monitoring relay operating at 120 volts shall be mounted in a NEMA 4 enclosure mounted near the main conduit box where it does not obstruct access to that box, or in control panel. Coordinate with the Division 26 00 00, ELECTRICAL subcontractor. A monitoring relay contact for external use, rated 5 amps, 120 volts minimum, shall close automatically on abnormally high thermistor temperature, and open automatically when the winding temperature has returned to a non-damaging level.
6. Grounding terminal box for entrance of conduits, sizes as shown on the Drawings.

2.8 PUMP ACCESSORIES

A. Anchor Bolts: Unless otherwise indicated, all anchor bolts shall be provided by the Contractor. Provide Type 316 stainless steel anchor bolts, 3/4-inch diameter minimum, for mounting pump discharge connection elbow. Length shall be adequate for conditions shown on the Drawings, through the grout fill and for at least 6-inches embedment into the precast manhole base.

B. Skid Frame: Frame components shall be of stainless steel construction using stainless steel mounting hardware.

C. Lifting lugs shall be provided for skid and any other equipment or items weighing over 100 pounds.

2.9 SPARE PARTS

A. For each pump supplied, provide a set of manufacturer standard spare parts kit, which should include at a minimum
   1. One (1) set of bearings
   2. One (1) mechanical seal

B. Provide two (2) complete sets, one for the Hospital WWTP and one for the Hon-Dah WWTP, of any special tools required to dismantle and perform maintenance on the pumps.

2.10 INSTRUMENTATION

A. At a minimum, the skid Supplier shall provide the instrumentation shown on the Drawings, listed above in paragraph 1.2, and described in the Process Control Narrative (PCN).

2.11 ELECTRICAL AND CONTROLS

A. Control panels and electronic communication devices must comply with all US Federal regulations.

B. Control panels shall be labeled as follows: At the Hospital WWTP it shall be labeled: “NPW System Control Panel LCP-1810- 01.” At the Hon-Dah WWTP it shall be labeled: “NPW System Control Panel LCP-2810- 01.

C. Power: The control panel shall accept a 460 volt, 60 hertz, 3 phase AC power input. When the disconnect is in the open position, all power shall be removed from the control system. Should 120-Volt AC Power be required, A transformer shall be included that will provide 120 volts for the control system.

D. Electrical device interconnecting conduit and wiring shall be the responsibility of the Manufacturer for skid mounted equipment. Power supply for the pumps and instrumentation shall be from LCP-1810-01 at the Hospital WWTP and LCP-2810-01 at the Hon-Dah WWTP.

E. Motor Starters and VFDs: The control panel or motor shall house variable frequency drives (VFDs) for each pump. The VFDs and motor starters shall be provided by the skid Supplier in accordance with Division 26. The VFDs shall be selected to match motor size, current and torque requirements.

F. Short circuit protection for system components shall be provided.

2.12 CONTROL PANEL

A. The NPW skid Supplier shall supply the NPW control panel (LCP-1810- 01 at the Hospital WWTP and LCP-2810- 01 at the Hon-Dah WWTP), which will control the NPW pumps based on discharge pressure.

B. Panel Enclosure: The NPW system control panel shall be a UL primary control panel in a NEMA 3R, type 304 stainless steel enclosure with thermostat and ventilation fan, skid mounted. The panel shall be a totally enclosed, front access type with indicating devices and switches mounted on the front door. The door(s) shall be lockable and fitted with a pneumatic hold open device. The control panel shall be maximum 36 inches wide by 12 inches deep with height sized to house all required equipment.

C. The system shall be controlled and monitored by a PLC and Operator Interface Terminal (OIT) installed in LCPs.
   1. Control items provided with the equipment specified in this Section shall provide complete manual and automatic operation of the NPW Pumps with protection against conditions which might damage the equipment. The Pump Skid Supplier is responsible for the proper operational control of the equipment.
   2. The control panel shall consist of all digital displays, potentiometers, switches, lights, relays, and other control devices required for a complete operable system.

D. Control panel programming at both the Hospital and Hon-Dah WWTPs, shall be as detailed in the process control narrative (PCN) in Section 432331.01, PCN: NON-POTABLE WATER SYSTEM-WWTP.

E. Coordinate with TCP/IP address and Ethernet equipment as per Division 40.

F. For both the Hospital and Hon-Dah WWTPs, the equipment Manufacturer shall provide the final versions of PLC and HMI programs.

PART 3 - EXECUTION

3.1 FABRICATION, SHIPMENT, AND ASSEMBLY

A. All equipment, piping, instrumentation, plumbing, and other accessories shall be factory-installed and wired prior to shipping to the greatest extend possible.

B. Equipment shall have necessary lifting lugs for lifting the components into place. Components shall be lubricated at the factory as necessary to protect the equipment during shipment and storage.

C. Proper care shall be taken to protect mechanical and electrical components from water and dust during shipment, storage and handling.

D. Deliver, store, and handle all equipment and materials in a manner to ensure installation in a sound and undamaged condition, to prevent exposure to the elements and in accordance with the requirements in Division 1.

3.2 UNLOADING AND INITIAL INSPECTION

A. Unloading of equipment will be performed by the installing General Contractor.

B. Prior to unloading equipment at the jobsite, the General Contractor and the Owner's representative will make a joint inspection of the condition of each equipment item and will note in writing all defects or omissions in the equipment.

C. Damage to the equipment or loss of equipment or materials during shipment and prior to unloading and transfer of equipment to the General Contractor, shall be replaced with new equipment and materials before the equipment will be accepted by the Owner.

3.3 INSTALLATION INSTRUCTIONS

A. Pumps and accessories shall be installed in accordance with Supplier's instruction and as shown on the Drawings.

B. The Supplier shall submit a complete set of equipment installation instructions. It shall be the Contractor's responsibility to coordinate all onsite installation requirements with the Supplier and Engineer.

3.4 FACTORY TESTS

A. Booster pumps shall be factory tested to current ANSI and Hydraulics Institute standards for vertical multistage centrifugal pumps. Provide results of the factory test to Owner and Engineer prior to shipment.

3.5 START-UP AND COMMISSIONING

A. Field Testing:
   1. Coordinate Supplier's field services and equipment testing with Owner:
      a. Notify Owner when equipment is ready for installation and alignment, installation check, start-up, and testing.
      b. Representative of Owner or Engineer to be present during all visits by Supplier's representative.
      c. Do not start up or test the pumps until Supplier's representative has approved the installation.
   2. Functional Test: Prior to plant startup, all equipment shall be inspected for proper alignment, quiet operation, proper connection, and satisfactory performance as follows:
      a. Check for quiet operation and vibration
      b. Perform insulation resistance (megger) test on stator and power cables
      c. Check seal lubrication
      d. Check for proper rotation
      e. Check power supply voltage
      f. Check motor operating load and no-load current
      g. Verify all control panel functions and simulate alarm conditions
      h. Flow and pressure observation for each pump to verify operation on the pump curve
   3. The Contractor is responsible for providing potable water for testing. Alternate clean water sources may be used with Engineer's and Owner's prior approval.

B. Start-Up:
   1. Start-up shall be performed in the presence of factory certified technician, Supplier's representative, Engineer, and the Owner's operators.
   2. Startup must be scheduled at least 2 weeks in advance to ensure all parties will be available.

3.6 MANUFACTURER'S CERTIFICATE(S)

A. Provide manufacturer's certificate(s) in accordance with Section 019113, GENERAL COMMISSIONING REQUIREMENTS of Division 01, GENERAL REQUIREMENTS. The certificate shall show:
   1. That the handling of pump equipment was satisfactory to the manufacturer.
   2. The installation is as specified and is acceptable to the manufacturer.
   3. Include all results and testing data recorded during field testing.

END OF SECTION

SECTION 432331.01 – PCN: NON-POTABLE WATER SYSTEM – WWTP

TABLE OF CONTENTS

1. Introduction 2
   1.1 Process Overview 2
2. Controls Overview 3
   2.1 Control Strategy 3
      2.1.1 Plant Control System 3
      2.1.2 MCC 4
      2.1.3 Local Control Panel 4
      2.1.4 Local Operator Station ..... **Error! Bookmark not defined.**
   2.2 Sequence of Operation 4
      2.2.1 HAND Operation 4
      2.2.2 AUTOMATIC (AUTO) Operation 4
      2.2.3 OFF Operation 4
      2.2.4 FAULT Signals 5
3. Emergency Shut Down and Power Failure 5
   3.1 Emergency Shutdown 5
   3.2 Power Failure 5
4. Control Systems DETAILS 5
   4.1 Controls and Interlocks 5
      4.1.1 PCS Interlocks 5
   4.2 Plant Control System Tags 5

SECTION 432331.01 – PCN: NON-POTABLE WATER SYSTEM

1. INTRODUCTION

The following Process Control Narrative describes in detail the operation of the Non-Potable Water Pump Stations (NPWs) at the Hospital and Hon-Dah WWTPs, including pumps, level sensors, pressure sensors, and float switch. The operating conditions and scenarios described below include, but are not limited to, standard operating conditions and emergency operating conditions.

Equipment covered by this Process Control Narrative is specified in the following Sections and Divisions:

Section 43 23 31, NPW PUMPING SYSTEM-WWTP
Division 40 – PROCESS INTERCONNECTIONS-WWTP
Division 26 – ELECTRICAL-WWTP

1.1 Process Overview

Effluent from the MBR system will be collected in the Reclaimed Effluent Tank for reuse within the WWTPs. Non-Potable Water is used for equipment washdown, automated cleaning cycles, and general washdown on site.

The NPW system will consist of a 2,000-gallon tank in the Process Room and two end suction centrifugal, instrumentation mounted in the tank for level detection, and pressure sensors in the discharge piping. Each pump is equipped with an integral variable frequency drive, controlled by a pressure transducer. The NPW pump will be speed controlled to maintain 100psi in the NPW line at variable flows. A magnetic flow meter will measure flows for system monitoring.

Table 1: NPW Pump Capacity

	NPW Pump Capacity
NPW Pump 1 1810-P-01	100 gpm
NPW Pump 2 1810-P-02	100 gpm

Level in the Reclaimed Effluent Tank will be monitored with a radar sensor which will be used to prevent the NPW pumps from operating when the level is too low. A back-up float system with a low-low level alarms will be used to stop the pumps if the radar sensor has failed.

Table 2 summarizes the NPW components and tag numbers.

Table 2: NPW Pump Station Equipment and Instrumentation

Process Equipment	Tag Number (Hospital)	Tag Number (Hon-Dah)
NPW Pump 1 *	1810-P-01	2810-P-01
NPW Pump 2*	1810-P-02	2810-P-02
Radar Level Sensor	1920-LE-01	2920-LE-01
Low Level Switch	1920-LSL/LAL-01	2920-LSL/LAL-01
NPW Magnetic Flow Meter	1810-FE/FIT-01	2810-FE/FIT-01
Pressure Indicator/Pressure Transmitter*	1810-PI/PIT-01	2810-PI/PIT-01
Pressure Switch Low*	1810-PSL-01, 02, 03	2810-PSL-01, 02, 03
Pressure Switch High*	1820-PSL-01	2820-PSL-01
Local Control Panel*	LCP-1810-01	LCP-2810-01
*Provided by the NPW Skid Supplier		

2. CONTROLS OVERVIEW

Process control for the NPW Pumps will be provided by a Local Control Panel (LCP-1810-01 or LCP-2810-01). The LCP will include an HMI screen to allow operators to view operational parameters, pump status, and alarms. Pump controls will be operated through the LCP which reports pump operational data back to the Plant Control System (PCS). The PCS will supply tank level signals to the LCP for pump shutoff in the event of a tank low level.

The variable frequency drives (VFDs) for each pump are integral to the pump and controlled by the LCP.

The LCP will be adjacent to the pump station for local pump operation. The LCP will call a pump to run and adjust the VFD based on pressure in the NPW line. The LCP will maintain a steady pressure in the line by adjusting the VFD each pump is rated to provide the full range of design flow. The LCP will also balance run time on the pumps by switching between duty and standby pumps based on the last call to operate or a forced switch every 24 hours.

The NPW flow meter data will be collected for operation calculations but will not be used for control of the pumps.

2.1 Control Strategy

2.1.1 Plant Control System

The PCS will monitor NPW System signals, including pressure, pump RUN, pump FAIL, HOA position, and NPW flow rate.

The LCP will alternate lead-lag pump designation to facilitate approximately equal run time for the pumps. The LCP will totalize pump run times and display this value for each pump at the HMI.

2.1.2 MCC

The MCC for the NPW pumps will be located in the electrical room. It only provides the power and main disconnects for the NPW pumps.

2.1.3 Local Control Panel

The manufacturer-supplied control panel shall at a minimum include the following functions:

- Pump HOA (each pump)
- Pump RUN (each pump)
- Pump FAIL (each pump)
- Pump speed indication (each pump)
- Pump ETM (each pump)
- Pump RESET (each pump)
- Operating pressure setpoint
- Operating pressure allowable deviation
- High pressure setpoint
- Low pressure setpoint
- System pressure indication

2.2 Sequence of Operation

2.2.1 HAND Operation

When the HOA switch at the LCP for a given pump is in the HAND position, the pump runs continuously at the last input setpoint speed. The speed can be entered to the LCP via the HMI prior to switching to HAND operation. Once in HAND, the pump speed can only be changed at the LCP HMI screen. The pump motor operates until the last set NPW pressure is reached, the high pressure setpoint is reached, a fault occurs, power to the pump is lost, or the LCP HOA switch is turned to OFF.

2.2.2 AUTOMATIC (AUTO) Operation

During AUTO operation the LCP will adjust the integral pump VFD to maintain a set pressure of 100 psi in the NPW discharge header. The LCP will also control pump alternation flipping the call to operate between pumps after every shutdown or after 24 hrs of continuous running.

If the Lead Pump fails, the LCP will call the second pump to operate and display an alarm light. When the alarm condition is cleared and a pump is placed back into AUTO, it will be assigned to operate the next time the pump is called to run.

Pumps will be shut off if the high or low pressure setpoints are reached.

2.2.3 OFF Operation

In the event of the LCP pump switch being turned to the OFF position or because of equipment Fault, the LCP will automatically start the alternate pump.

2.2.4 FAULT Signals

- Pump motors will stop immediately if high motor current is detected, or if the pump's integrated temperature switch is activated. An external fault alarm will be generated at the LCP and communicated to the PCS. These faults must be reset by pressing the RESET button at the pump LCP.
- An alarm will be generated when the pump's integral moisture switches are triggered. Pumps are allowed to run.
- Alarms are triggered if the low or high pressure setpoints are reached and all pumps are shut off.
- A communication fault occurs if there is an issue with signal connectivity and the LCP is no longer receiving or sending signals from/to the VFD.

3. EMERGENCY SHUT DOWN AND POWER FAILURE

3.1 Emergency Shutdown

In the event the emergency stop button is pressed, the active NPW pump will shut down and both pumps will remain off until the button is reset.

3.2 Power Failure

In the event of a power failure, any equipment that was running in AUTO or HAND will be started up once the standby generator comes online. Equipment startup is controlled by the PCS, which staggers startup of the process equipment to reduce instantaneous load on the standby generator.

4. CONTROL SYSTEMS DETAILS

4.1 Controls and Interlocks

4.1.1 PCS Interlocks

- The Low Level Alarm Low Float in the Reclaimed Effluent tank shall prevent the NPW pumps from running in either HAND or AUTO mode.

4.2 Plant Control System Tags

Legend:

- D – Display on a screen
- S – Display and operator input on a screen
- Alarm Level Priority 1
- Alarm Level Priority 2
- Alarm Level Priority 3
- L – Logged to database
- T – Display on trend

Table 3 lists the LCP tags and signals all signals will be repeated to the PCS. The following list may not contain all required Plant Control System tags and signals. The contractor is to do a detailed take-off from all drawings and specifications and determine all required tags and signals. For the HMI, use a red light or red text to indicate a fault has occurred, or a level float has been switched on.

Table 3: NPW Pump Station LCP/PCS Tags and Signals

Signal/Tag Description	Display and Register Type	Alarm Level	Trend/Logging	Notes
NPW Pump #1 Running Mode	D		L	
NPW Pump #1 Faulted Mode	D	2	L	
NPW Pump #1 External Fault	D	2	L	
NPW Pump #1 Comm. Fault	D	2	L	
NPW Pump #1 Current	D		L, T	Show units, Amps
NPW Pump #1 Runtime Hours	D		L	Show units, hr
NPW Pump #2 Running Mode	D		L	
NPW Pump #2 Faulted Mode	D	2	L	
NPW Pump #2 External Fault	D	2	L	
NPW Pump #2 Comm. Fault	D	2	L	
NPW Pump #2 Current	D		L, T	Show units, Amps
NPW Pump #2 Runtime Hours	D		L	Show units, hr
Operating Pump Speed Feedback	S		L, T	Show units, %
Alternate NPW Next to Operate in LCP	S			
Pump Pressure Setpoint	S			Show units, PSI
Pump Pressure Allowable Deviation	S			Show Units, PSI
High Pressure Setpoint	S	1	L	Show Units, PSI
Low Pressure Setpoint	S	1	L	Show Units, PSI
Level Alarm Low Float	D			Signal provided by PCS
NPW Pump Station Instantaneous Flow	D		L,T	Show units, gpm; signal provided by PCS

SECTION 432332 – RECLAIMED WATER PUMPING SYSTEM – WWTP

PART 1 - GENERAL

1.1 WORK INCLUDED

A. This section covers the work necessary to furnish and install an inline vertical multistage centrifugal pump skid and accessories for the Hon-Dah WWTP. This package consists of a single-pump, self-contained skid complete with VFD and control panel. The pump Manufacturer or Supplier shall provide the pump, VFD, and control panel.

B. All equipment shall be compliant with Federal Acquisition Register the clause 52.225-11, Buy American-Construction Materials under Trade Agreements (Nov 2023) and provision 52.225-12, Notice of Buy American Requirement-Construction Materials under Trade Agreements (May 2014).

1.2 EQUIPMENT NUMBERS

A. The equipment covered under this specification are:

Equipment Description	Hon-Dah WWTP Equipment Numbers
Reclaimed Water Pump	2940-P-01
Local Control Panel	LCP-2940-01

1.3 DEFINITIONS

A. Total Dynamic Head (TDH). Total dynamic head shall be the pressure in feet measured at the centerline of the pump discharge flange, and shall be the head in feet of liquid to be supplied by the pump.

B. Overall Efficiency. Overall efficiency shall include pump and motor efficiencies, taking into account pump friction and pump discharge pipe elbow losses.

1.4 GENERAL REQUIREMENTS

A. Like items of equipment provided hereunder shall be the end product of the same manufacturer in order to achieve standardization of operation, maintenance, spare parts and manufacturer's services; and shall include all necessary appurtenances for a complete and working system. The equipment shall be the product of a manufacturer regularly engaged in the production of equipment for the specified use. The manufacturer shall have the sole responsibility for the proper functioning and coordination of the equipment as furnished.

B. See the GENERAL CONDITIONS and Division 01, GENERAL REQUIREMENTS, which contain information and requirements that apply to the work specified herein and are mandatory for this project.

1.5 MANUFACTURER’S SERVICES

A. The pump Manufacturer shall provide the services of a qualified representative for the equipment specified for installation assistance, inspection and certification of the installation, equipment testing, startup assistance, and training of Owner’s personnel.

B. Also see Section 019113, GENERAL COMMISSIONING REQUIREMENTS in Division 01, GENERAL REQUIREMENTS.

C. A qualified Manufacturer's representative shall be one who has had at least two years' experience in the installation of the types of pump specified.

D. Startup services and training of Owner’s personnel shall be at such times as requested by the Owner.

E. Submit a certification of proper installation and satisfactory performance as specified in Part 3 of these Specifications.

1.6 SUPPLIERS SERVICES

A. Supplier’s services shall be provided in accordance with the following:
   1. A qualified Supplier's representative of the equipment specified shall be available at the jobsite for installation assistance, inspection and certification of the installation, equipment testing, startup assistance, and training of Owner's personnel for the minimum person-days for the services herein, travel time excluded. Provide the following services:
      a. 1½ person-day for installation assistance, inspection and certification of the installation, and functional and performance testing of the pump, valves, instrumentation, and controls.
      b. ½ person-day for pump system startup and Owner training
   2. A qualified Supplier’s representative shall be one who has had at least 2 years of experience in the installation and startup of the equipment specified herein.
   3. Startup services and training of Owner’s personnel shall be at such times as requested by the Owner.
      a. Engineer and Owner will be present at that time and develop a punch list of items to be completed before Final Completion.

1.7 QUALITY ASSURANCE

A. All equipment specified herein shall be furnished by one Supplier including all necessary appurtenances for a complete and working system. The Supplier shall have sole-source responsibility for the coordination and functionality of all system components.

B. Equipment Suppliers shall have at least 5 years of design and manufacturing experience with pump systems and appurtenances specified herein, with no less than twenty (20) similar units installed within the US in similar applications.

1.8 SUBMITTALS

A. Submittals shall be made as required in Section 013300, SUBMITTAL PROCEDURES in Division 01, GENERAL REQUIREMENTS. In addition, the information summarized below shall be provided.

B. Shop Drawings shall include performance data curves showing head, capacity, horsepower demand, and pump efficiency over the entire operating range of the pump, from shutoff to maximum capacity. The pump Manufacturer shall indicate separately the head, capacity, horsepower demand, overall efficiency, and minimum submergence required at the guarantee point.

C. Complete specifications, descriptive literature, dimensional drawings, assembly cuts, and materials of construction for all equipment and devices to be furnished under this specification section.

D. Make, model, and weights for the pump and motor.

E. Motor manufacturers' guaranteed power factor and minimum efficiencies at three operating points within the operational range, including the minimum, maximum and best efficiency point.

F. Panel shop drawings.

G. Complete panel wiring and connection diagrams.

H. Proposed factory and field test descriptions in sufficient detail to fully describe the specific tests to be conducted and quantities to be measured to demonstrate full conformance with these Specifications.

I. Certified copy of test report for identical motor tested in accordance with NEMA MG 1-12.53a and IEEE Standard 112, Test Method B, showing full load efficiency not less than specified value; motors not as specified will be rejected.

J. Motor Tests and Test Reports:
   1. Short commercial tests shall be made, including no-load current at rated voltage, high potential, and locked rotor current.
   2. Copies of test reports for actual motor being provided.

K. Complete motor rating and list of special motor features being provided.

1.9 OPERATION AND MAINTENANCE MANUALS

A. Operation and Maintenance (O&M) Manuals for the equipment specified herein shall be furnished as specified in Section 017823, OPERATION AND MAINTENANCE DATA. Submit information from the pump Manufacturer and the motor manufacturer.

B. The O&M manuals shall contain, at a minimum, full descriptions of all equipment specified herein, motor data, spare parts lists, and detailed instructions for all operation and maintenance tasks to be performed by the operator.

C. A spare manual shall be shipped with the equipment in order to allow for proper installation and operation of the equipment prior to the release of all final installation, operation, and maintenance manuals.

1.10 WARRANTY

A. The Manufacturer shall warrant that its equipment shall be free from defects in material and workmanship; and that it will replace or repair, any part or parts for which examination shall show to have failed under normal use and service by the Owner within five (5) years following the date of Substantial Completion. The five-year warranty shall at a minimum:
   1. Provide 100 percent coverage for the first 18 months.
   2. Provide 50 percent coverage from 19 months to 39 months.
   3. Provide 25 percent coverage from 40 to 60 months.

B. The Manufacturer shall be responsible for freight associated with shipping defective equipment to the factory.

C. This warranty shall not be encumbered nor limited by the number of hours of equipment operation time. Warranties that restrict coverage to operating conditions or limitations on hours of operation time are not acceptable.
   1. The warranty shall provide for the Supplier to bear the full cost of labor and materials for replacement and/or repair of faulty or defective components including shipping so there shall be no cost incurred by the Owner for this work during the warranty period except as provided by prorated warranty terms.
   2. The Supplier's warranty policy is amended only by the items considered consumables, i.e., pump seals, pump packing, lubricants and other maintenance items consumed by usage.

1.11 REFERENCE SPECIFICATIONS, CODES AND STANDARDS

A. All motors and/or electrical equipment shall be designed and constructed in complete accordance with the latest edition and revision of all applicable codes and regulations, including the following:
   1. Institute of Electrical and Electronic Engineers (IEEE)
   2. National Electrical Suppliers Association (NEMA)
   3. National Electrical Code (NEC)

B. All mechanical components shall be designed and constructed in accordance with the latest edition and revision of all applicable codes and regulations, including the following:
   1. National Bureau of Standards (NBS)
   2. American Society for Testing Materials (ASTM)
   3. American National Standards Institute (ANSI)
   4. American Society of Mechanical Engineers (ASME)
   5. American Water Works Association (AWWA)

C. Performance requirements shall be as defined in the Hydraulic Institute Standards.

1.12 DESIGN CONDITIONS

A. The non-potable water system is served from the treated effluent. The system will supply water to the headworks, solids handling, and hose bibs through the treatment plant.

PART 2 - PRODUCTS

2.1 GENERAL

A. “Basis-of-Design Products:” The first named Manufacturer’s system was used as the Basis of Design for this Specification and the Drawings. The structures and facilities appurtenant to the pump shall meet the basis of design in quality and capacity. Equipment furnished by all qualified, interested Manufacturers will be considered, provided the necessary structural, electrical, and mechanical changes are submitted in conformance with the requirements of the GENERAL CONDITIONS and DIVISION 1, GENERAL REQUIREMENTS. <u>The Contractor shall be responsible for all design changes associated with other Manufacturers’ equipment and shall bear all costs for necessary changes for a complete and satisfactory installation.</u>

B. Electrical and controls materials and workmanship required to complete the work under this section shall also conform to the applicable requirements of Division 26, ELECTRICAL.

C. The head-capacity curve shall have a steady rise in head from maximum to minimum flow within the preferred operating region. The shut-off head shall be a minimum of 20% higher than the head at the best efficiency point.

D. Nameplates with the name of the Manufacturer, equipment model number and all other pertinent data shall be affixed at a visible and accessible location on all equipment.

2.2 PUMP MANUFACTURERS AND MODELS

A. Xylem-Goulds 15SHX10K

B. Grundfos

C. Or approved equal.

2.3 SERVICE CONDITIONS

A. Pump will convey treated and disinfected reclaimed water from a storage tank to spray irrigation.

B. Pump shall be designed for a dry installation and shall be designed to operate continuously.

C. Pump Elevation
   1. Hon-Dah WWTP: 7,160 feet ASL

D. System Curve for the Hon-Dah WWTP Reclaimed Water Pump:
   1. One Pump: 127 gpm @ 253.2 ft; 177 gpm @ 260 ft; 205 gpm @ 265.6 ft.

2.4 DESIGN CONDITIONS

A. Pump design conditions for each WWTP are:

Design Parameter	Hon-Dah WWTP Design Criteria
Pump Operation	Continuous
Design Point Flow Total Dynamic Head (TDH)	 177 GPM 260 FEET
Minimum Overall Efficiency at Design Point	59 percent
Minimum NPSH Available	16 FEET
Liquid Pumped Specific Gravity	1.0
Rated Horsepower	30.0 hp
Power Supplied	3 phase, 480 volt, 60 Hz

2.5 PUMP CONSTRUCTION

A. General:
   1. Pump Type: End suction centrifugal pump with integrated close coupled electric motor.
   2. Pump motor may be supplied with integrated VFD or separate VFD mounted in the Manufacturer supplied control panel.
   3. Pump and drive fitted on common adjustable base, made from stainless steel. Coupling guard, if any, shall be according to OSHA standards.

B. Pump Casing:
   1. The pump casing shall be concentric volute type, back pull-out design with ANSI class 150 flanged suction and discharge connections and shall be constructed of AISI TYPE 316L stainless steel material.

2. The pump discharge nozzle shall be center line oriented to allow simplified system design and installation.
3. The complete pump unit shall be supported by the motor.

C. Wear Ring:
1. A replaceable labyrinth type suction wear ring of AISI TYPE 316L stainless steel hall be provided and held securely by means of an interference fit in the casing suction.

D. Impeller:
1. The pump impeller shall be of enclosed design, constructed of CF-8M Cast 316 stainless steel material, and key driven. A stainless steel bolt and washer shall provide positive attachment of the impeller to the motor shaft.

E. Seal Housing:
1. The seal housing shall be constructed of AISI TYPE 316L stainless steel material and shall hold the stationary seat of the mechanical shaft seal. The seal housing shall be clamped in place over a machined fit on the motor adapter by the pump casing to maintain component alignment and is "O-ring" sealed to insure against leakage.

F. Mechanical Seal:
1. The pump shaft seal shall be a Type 21 mechanical seal, or equal, constructed of the following materials:
   a. Rotary Ring Carbon
   b. Stationary Ring: Silicon-Carbide
   c. Elastomer: FKM
   d. Matal Parts: Type 316 SST

G. Shaft Sleeve
1. The pump shaft sleeve shall be constructed of AISI Type 316L stainless steel and shall be of the hook type design. It shall be locked in place by the impeller without necessity of other mechanical locking devices. The sleeve design must allow the motor shaft to remain dry during pump operation.

H. Motor Mounting Adaptor
1. The rigid adapter of ASTM A48 CL20 cast iron construction shall support the pump liquid end and maintain pump to motor alignment. A bottom port shall be provided to allow condensation of seal leakage to drain and not be retained within the adapter.

2.6 DRIVE MOTOR CHARACTERISTICS

A. Drive motor(s) shall be designed, manufactured, and tested in accordance with the latest revised edition of NEMA MG 1. Motors shall be non-overloading, TEFC with IE5 motor efficiencies. Where integrated VFDs are provided, the VFDs shall have NEMA 4 enclosures. All VFDs shall have IES2 popwer drive system efficiencies. The motors shall conform to the following:

Synchronous Speed	Match driven equipment
Slip	3 percent maximum at full load.
Voltage, Phase, and Frequency	460 volts, 3-phase, 60 Hz.
Mounting	Horizontal
Enclosure	Totally Enclosed Fan Cooled

Service Factor	1.15
Duty Cycle	Continuous
Ambient Temperature Rating	40-100 degrees F.
Starting Method	VFD
Starting current	NEMA Code G.

B. Provide motor modifications and accessories as follows:
   1. Drains and breathers for moisture removal. Provide weep holes and drain plugs for all TEFC motors.
   2. Continuous operation at rated horsepower and full-service factor at elevations specified above.
   3. Screens over all air openings.
   4. Sealed winding insulation.
   5. Thermal protection system consisting of thermistors and a monitoring relay Three thermistors shall be embedded in the coils, one in each phase, protecting the stator windings from damaging temperatures. A thermistor monitoring relay operating at 120 volts shall be mounted in a NEMA 4 enclosure mounted near the main conduit box where it does not obstruct access to that box, or in control panel. Coordinate with the Division 26 00 00, ELECTRICAL subcontractor. A monitoring relay contact for external use, rated 5 amps, 120 volts minimum, shall close automatically on abnormally high thermistor temperature, and open automatically when the winding temperature has returned to a non-damaging level.
   6. Grounding terminal box for entrance of conduits, sizes as shown on the Drawings.

2.7 PUMP ACCESSORIES

A. Anchor Bolts: Unless otherwise indicated, all anchor bolts shall be provided by the Contractor. Provide Type 316 stainless steel anchor bolts, 3/4-inch diameter minimum, for mounting pump discharge connection elbow. Length shall be adequate for conditions shown on the Drawings, through the grout fill and for at least 6-inches embedment into the precast manhole base.

B. Skid Frame: Frame components shall be of stainless steel construction using stainless steel mounting hardware.

C. Lifting lugs shall be provided for skid and any other equipment or items weighing over 100 pounds.

2.8 SPARE PARTS

A. For each pump supplied, provide a set of Manufacturer standard spare parts kit, which should include at a minimum
   1. One (1) set of bearings
   2. One (1) mechanical seal

B. Provide one set of any special tools required to dismantle and perform maintenance on the pump.

2.9 ELECTRICAL AND CONTROLS

A. Control panels and electronic communication devices must comply with all US Federal regulations.

B. Control panel shall be labeled as follows: “Reclaimed Water Pump Control Panel LCP-2940- 01.”

C. Power: The control panel shall accept a 460 volt, 60 hertz, 3 phase AC power input. When the disconnect is in the open position, all power shall be removed from the control system. Should 120-Volt AC Power be required, A transformer shall be included that will provide 120 volts for the control system.

D. Electrical device interconnecting conduit and wiring shall be the responsibility of the Manufacturer for skid mounted equipment. Power supply for the pump and instrumentation shall be from LCP-1810-01 at the Hospital WWTP and LCP-2810-01 at the Hon-Dah WWTP.

E. Motor Starters and VFDs: The control panel or motor shall house variable frequency drives (VFDs) for each pump. The VFDs and motor starters shall be provided by the skid Supplier in accordance with Division 26. The VFDs shall be selected to match motor size, current and torque requirements.

F. Short circuit protection for system components shall be provided.

2.10 CONTROL SYSTEM

A. The skid Supplier shall supply the reclaimed water pump control panel (LCP-2940- 01).

B. Panel Enclosure: The control panel shall be a UL primary control panel in a NEMA 3R, type 304 stainless steel enclosure with thermostat and ventilation fan. The panel shall be a totally enclosed, front access type with indicating devices and switches mounted on the front door. The door(s) shall be lockable and fitted with a pneumatic hold open device. The control panel shall be maximum 36 inches wide by 12 inches deep with height sized to house all required equipment.

C. The system shall be controlled and monitored by a PLC and Operator Interface Terminal (OIT) installed in LCPs. At a minimum, the panel shall provide the following functions:
   1. Pump OO switch
   2. Pump RUN indication
   3. Pump FAIL indication
   4. RESET
   5. Pump ETM
   6. Operator input for manually adjusting pump speed
   7. Ethernet communication capabilities for sending a general alarm to the plant control system (PCS) and receiving a tank low level signal from the reclaimed water tank. The low level signal shall shut off the pump.

D. Coordinate with IP addresses and Ethernet equipment as per Division 40.

E. The equipment Manufacturer shall provide the final versions of PLC and HMI programs.

PART 3 - EXECUTION

3.1 FABRICATION, SHIPMENT, AND ASSEMBLY

A. All equipment, piping, instrumentation, plumbing, and other accessories shall be factory-installed and wired prior to shipping to the greatest extend possible.

B. Equipment shall have necessary lifting lugs for lifting the components into place. Components shall be lubricated at the factory as necessary to protect the equipment during shipment and storage.

C. Proper care shall be taken to protect mechanical and electrical components from water and dust during shipment, storage and handling.

D. Deliver, store, and handle all equipment and materials in a manner to ensure installation in a sound and undamaged condition, to prevent exposure to the elements and in accordance with the requirements in Division 1.

3.2 UNLOADING AND INITIAL INSPECTION

A. Unloading of equipment will be performed by the installing General Contractor.

B. Prior to unloading equipment at the jobsite, the General Contractor and the Owner's representative will make a joint inspection of the condition of each equipment item and will note in writing all defects or omissions in the equipment.

C. Damage to the equipment or loss of equipment or materials during shipment and prior to unloading and transfer of equipment to the General Contractor, shall be replaced with new equipment and materials before the equipment will be accepted by the Owner.

3.3 INSTALLATION INSTRUCTIONS

A. Pump and accessories shall be installed in accordance with Supplier's instruction and as shown on the Drawings.

B. The Supplier shall submit a complete set of equipment installation instructions. It shall be the Contractor's responsibility to coordinate all onsite installation requirements with the Supplier and Engineer.

3.4 FACTORY TESTS

A. Booster pump shall be factory tested to current ANSI and Hydraulics Institute standards for vertical multistage centrifugal pump. Provide results of the factory test to Owner and Engineer prior to shipment.

3.5 START-UP AND COMMISSIONING

A. Field Testing:
   1. Coordinate Supplier's field services and equipment testing with Owner:
      a. Notify Owner when equipment is ready for installation and alignment, installation check, start-up, and testing.
      b. Representative of Owner or Engineer to be present during all visits by Supplier's representative.
      c. Do not start up or test the pump until Supplier's representative has approved the installation.
   2. Functional Test: Prior to pump startup, all equipment shall be inspected for proper alignment, quiet operation, proper connection, and satisfactory performance as follows:
      a. Check for quiet operation and vibration
      b. Perform insulation resistance (megger) test on stator and power cables
      c. Check seal lubrication
      d. Check for proper rotation
      e. Check power supply voltage

f. Check motor operating load and no-load current
g. Verify all control panel functions and simulate alarm conditions
h. Flow and pressure observation for each pump to verify operation on the pump curve

3. The Contractor is responsible for providing potable water for testing. Alternate clean water sources may be used with Engineer's and Owner's prior approval.

B. Start-Up:
1. Start-up shall be performed in the presence of factory certified technician, Supplier's representative, Engineer, and the Owner's operators.
2. Startup must be scheduled at least 2 weeks in advance to ensure all parties will be available.

3.6 MANUFACTURER'S CERTIFICATE(S)

A. Provide Manufacturer's certificate(s) in accordance with Section 019113, GENERAL COMMISSIONING REQUIREMENTS of Division 01, GENERAL REQUIREMENTS. The certificate shall show:
1. That the handling of pump equipment was satisfactory to the Manufacturer.
2. The installation is as specified and is acceptable to the Manufacturer.
3. Include all results and testing data recorded during field testing.

END OF SECTION

SECTION 432358 – POSITIVE DISPLACEMENT ROTARY LOBE PUMPS – WWTP

PART 1 - GENERAL

1.1 WORK INCLUDED

A. This section covers the work necessary to furnish and install, complete, the positive displacement rotary lobe pumps specified herein for the EQ Basin Transfer Pumps and the Digested Sludge Pumps for the Hospital WWTP and the Hon-Dah WWTP. The pump manufacturer shall provide all pumps and other accessories, complete.

B. All equipment shall be compliant with Federal Acquisition Register the clause 52.225-11, Buy American-Construction Materials under Trade Agreements (Nov 2023) and provision 52.225-12, Notice of Buy American Requirement-Construction Materials under Trade Agreements (May 2014).

C. Related Sections:
1. Section 461155.04, PCN: EQ BASIN TRANSFER PUMP STATION-WWTP
2. Division 40, PROCESS INTERCONNECTIONS-WWTP
3. Division 26, ELECTRICAL-WWTP
4. BP2 AND BP3 P&ID Drawings

1.2 EQUIPMENT NUMBERS

A. Equipment covered under this specification are as follows:
1. EQ Basin Transfer Pumps:

	Hospital WWTP	Hon-Dah WWTP
EQ Basin Transfer Pump 1	1220-P-01	2220-P-01
EQ Basin Transfer Pump 2	1220-P-02	2220-P-02
EQ Basin Transfer Pump 2	1220-P-03	n/a

2. Digested Sludge Pumps:

	Hospital WWTP	Hon-Dah WWTP
Sludge Pump 1	1730-P-01	2730-P-01
Sludge Pump 2	1730-P-02	2730-P-02

1.3 DEFINITIONS

A. Total Dynamic Head: Total Dynamic head in feet of liquid pumped shall be the discharge head minus the suction head (or plus the suction lift), both measured at the pump flanges and corrected to pump centerline, plus the difference in velocity heads at the same points.

B. Overall Efficiency: Overall efficiency shall be the total efficiency for motor and pump from the motor terminals to pumped liquid, and shall be inclusive of pump hydraulic, volumetric, and mechanical efficiencies.

1.4 GENERAL

A. Like items of equipment provided hereunder shall be the end product of the same manufacturer in order to achieve standardization of operation, maintenance, spare parts and manufacturer's services; and shall include all necessary appurtenances for a complete and working system. The equipment shall be the product of a manufacturer regularly engaged in the production of equipment for the specified use. The

manufacturer shall have the sole responsibility for the proper functioning and coordination of the equipment as furnished.

B. See the GENERAL CONDITIONS and Division 01, GENERAL REQUIREMENTS, which contain information and requirements that apply to the work specified herein and are mandatory for this project.

1.5 MANUFACTURER'S SERVICES

A. The pump manufacturer shall provide the services of a qualified representative for the equipment specified at the jobsite for installation assistance, inspection and certification of the installation, equipment testing, startup assistance, and training of Owner's personnel.

B. Also see Section 019113, GENERAL COMMISSIONING REQUIREMENTS in Division 01 GENERAL REQUIREMENTS.

C. A qualified manufacturer's representative shall be one who has had at least two years' experience in the installation of the types of pumps specified.

D. The manufacturer's representative for the equipment specified herein shall be present at the jobsite and/or classroom designated by the Owner for the minimum person-days listed, travel time excluded. For each WWTP, the following services shall be provided in a minimum of two trips:
   1. 2 person-days for installation assistance, inspection, and certification of the installation.
   2. 2 person-days for functional and performance testing.
   3. 1 person-day for pre-startup classroom or jobsite training.

E. Startup services and training of Owner's personnel shall be at such times as requested by the Owner.

F. Submit a certification of proper installation and satisfactory performance as specified in Part 3 of these Specifications.

1.6 SUBMITTALS

A. Submittals shall be made as required in Section 013300, SUBMITTAL PROCEDURES in Division 01, GENERAL REQUIREMENTS. In addition, the information summarized below shall be provided.

B. Shop Drawings shall include performance data curves showing head, capacity, horsepower demand, and pump efficiency over the entire operating range of the pump, from shutoff to maximum capacity. The equipment manufacturer shall indicate separately the head, capacity, horsepower demand, overall efficiency, and minimum submergence required at the guarantee points. Performance requirements shall be as defined in the Hydraulic Institute Standards.

C. Complete specifications, descriptive literature, dimensional drawings, assembly cuts, and materials of construction for all equipment and devices to be furnished under this specification section.

D. Weights for all pumps, base plates, and motors.

E. Motor manufacturers' guaranteed power factor and minimum efficiencies at ¼, ½, ¾, and full load.

F. Complete connection diagrams.

G. Anchor bolt sizes and lengths.

H. Proposed factory and field test descriptions in sufficient detail to fully describe the specific tests to be conducted and quantities to be measured to demonstrate full conformance with these Specifications.

I. A complete set of manufacturer's instructions covering storage, installation, operation, lubrication, and maintenance shall be available at the jobsite no later than the date the pumps are received. This requirement is in addition to O & M manuals as specified in Section 017700, CLOSEOUT PROCEDURES.

J. Certified copy of test report for identical motor tested in accordance with NEMA MG 1-12.53a and IEEE Standard 112, Test Method B, showing full load efficiency not less than specified value; motors not as specified will be rejected.

K. Motor Tests and Test Reports:
   1. Short commercial tests shall be made, including no-load current at rated voltage, high potential, and locked rotor current.
   2. Copies of test reports for actual motor being provided.

L. Motor Data Sheets:
   1. Complete motor rating and list of special motor features being provided.

1.7 OPERATION AND MAINTENANCE MANUALS

A. Operation and Maintenance (O&M) Manuals for the equipment specified herein shall be furnished as specified in Section 017823, OPERATION AND MAINTENANCE DATA. Submit information from the pump manufacturer and the motor manufacturer.

B. The O&M manuals shall contain, at a minimum, full descriptions of all equipment specified herein, motor data, spare parts lists, and detailed instructions for all operation and maintenance tasks to be performed by the operator.

C. A spare manual shall be shipped with the equipment in order to allow for proper installation and operation of the equipment prior to the release of all final installation, operation, and maintenance manuals.

1.8 WARRANTY

A. The Manufacturer shall warrant that its equipment shall be free from defects in material and workmanship; and that it will replace or repair, any part or parts for which examination shall show to have failed under normal use and service by the Owner within one (1) year following the date of Substantial Completion.
   1. The Manufacturer shall be responsible for freight associated with shipping defective equipment to the factory.

B. This warranty shall not be encumbered nor limited by the number of hours of equipment operation time. Warranties that restrict coverage to operating conditions or limitations on hours of operation time are not acceptable.

PART 2 - PRODUCTS

2.1 GENERAL

A. "Basis-of-Design Products:" The first named Manufacturer's system was used as the Basis of Design for this Specification and the Drawings. The structures and facilities appurtenant to the pumps shall meet the basis of design in quality and capacity. Equipment furnished by all qualified, interested Manufacturers will be considered, provided the necessary structural, electrical, and mechanical changes are submitted in conformance with the requirements of the GENERAL CONDITIONS and DIVISION 1, GENERAL REQUIREMENTS. The Contractor shall be responsible for all design changes associated with other Manufacturers' equipment and shall bear all costs for necessary changes for a complete and satisfactory installation.

2.2 MANUFACTURERS

A. Boerger Model PL200

B. Vogelsang

C. Or Approved Equal

2.3 SERVICE CONDITIONS

A. Pumped Fluid Temperature: 10°C to 20°C

B. Pumps and motors shall be designed for continuous duty and be suitable for dry installation without overheating, without cavitation, and without excessive vibration.

C. Pumps shall be able to fit in the space provided as shown on the Drawings, while maintaining manufacturers' required clearances.

D. Pump Elevation
   1. Hospital WWTP: 5,600 feet ASL
   2. Hon-Dah WWTP: 7,000 feet ASL

E. System Curve for the Hospital WWTP for minimum suction level and maximum discharge level and a friction coefficient C = 120:
   1. Two Pumps:

F. System Curve for the Hon-Dah WWTP EQ Transfer Pumps for minimum suction level and maximum discharge level, and a friction coefficient C = 120:
   1. Phase 1 Conditions - one pump: 15 gpm @ 11.79 ft; 37 gpm @ 11.95 ft; 65 gpm @ 12.32 ft; 90 gpm @ 12.8 ft; 110 gpm @ 13.27 ft. This contract only includes two pumps for Phase 1 of the Hon-Dah WWTP construction. Below design requirements reflect Phase 1 flow rates and head conditions.
   2. Full Build-out Conditions - two pumps: 60 gpm @ 12.24 ft; 72 gpm @ 12.44 ft; 100 gpm @ 13.02 ft; 180 gpm @ 15.53 ft; 217 gpm @ 17.09 ft.

2.4 DESIGN REQUIREMENTS

A. WWTP Flows:

Flow Condition	Hospital WWTP	Hon-Dah WWTP
Annual Average Flow	87 gpm	37 gpm
Peak Hour Flow	262 gpm	110 gpm

B. Design Criteria for the EQ Basin Transfer Pumps are as follows:

Design Parameter	Hospital WWTP Design Criteria	Hon-Dah WWTP Design Criteria
Number	3 (2 duty/ 1 standby)	2 (1 duty, 1 standby)
TDH at Pump Design Points	9.8 ft @ 44 gpm 19.0 ft @ 131 gpm	11.95 ft @ 37 gpm 13.27 ft @ 110 gpm
Minimum NPSH Available	11.8 ft	15.0 ft
Maximum Suction Lift Required	5’-0”	
Liquid Pumped Specific Gravity	1.0	
Solids Content	Maximum 500 mg/L	
Discharge Connection Diameter	4” ANSI 150 lb	
Motor Drive	Variable Frequency Drive	
Maximum Motor Speed	1800 rpm	
Rotor Type	Tri-lobe	
Maximum Rated Horsepower	5 hp	
Power Supplied	3 phase, 480 volt, 60 Hz	

C. Design Criteria for the Digested Sludge Pumps are as follows:

Design Parameter	Hospital WWTP Design Criteria	Hon-Dah WWTP Design Criteria
Number	2 (1 duty/ 1 standby)	2 (1 duty/ 1 standby)
Design Point	10-40 gpm, 0-16 feet	10-40 gpm, 0-16 feet
Min/Max Suction Static Head	-2 feet, 15 feet	-2 feet, 12 feet
Liquid Pumped Specific Gravity	1.00	
Solids Content	5 percent	
Discharge Connection Diameter	4” ANSI 150 lb	
Motor Drive	Variable Frequency Drive	
Maximum Motor Speed	1800 rpm	
Rotor Type	Tri-lobe	
Maximum Rated Horsepower	5 hp	
Power Supplied	3 phase, 480 volt, 60 Hz	

D. The pumps shall be designed to temporarily run dry and to operate in either direction.

2.5 GENERAL EQUIPMENT REQUIREMENTS

A. Electrical and controls materials and workmanship required to complete the work under this section shall also conform to the applicable requirements of Division 26, ELECTRICAL.

B. All working parts of the pumps and motors, such as bearings, wearing rings, shaft, sleeves, etc., shall be standard dimensions built to limit gauges or formed to templates, such that parts will be interchangeable between like units and such that the Owner may, at any time in the future, obtain replacement and repair parts for those furnished in the original machines.

C. Mechanical equipment, including drives and electric motors shall be supplied and installed in accordance with applicable OSHA regulations. The noise level of motors, unless otherwise noted, shall not exceed 85 dBA measured 3 meters from the unit under free field conditions while operating on utility power.

D. Pump Identification Plate: A 16-gauge stainless steel identification plate shall be securely mounted on each pump in a readily visible location. The plate shall bear the 1/4- inch die-stamped equipment identification number that is assigned each pump in the Detail Pump Specifications hereinafter and shown on the Drawings.

E. Guards: All openings shall be protected with safety guards as required by OSHA.

F. Vent and Drain Connections: Provide tapped and plugged suction housing vent and drain connections. Field install a ½-inch petcock, rated for the case hydrostatic test pressure, in the casing vent connection.

G. Gauge Connections: Provide tapped and plugged suction and discharge gauge connections on the pump nozzles or flanges. Where this is not possible, provide gauge connections on the immediately adjacent piping.

H. Lifting lugs: Equipment weighing over 100 pounds shall be provided with lifting lugs.

I. Spare parts and Special Tools: See the Detail Pump Specifications for spare parts and special tools required for each pump or set of pumps.

2.6 PUMP

A. General:
   1. Pump Type: Heavy duty, horizontal, positive displacement rotary lobe type pump with electric motor. Rotation of all like pumps shall be the same.
   2. Pump and drive fitted on common adjustable base, made from galvanized steel. Coupling guard shall be according to OSHA standards and shall be painted orange.

B. Pump Construction:
   1. The pump casing shall be manufactured in a single block constructed of cast iron ASTM A48 grade 40, Brinell hardness 264 Brinell, or equal. Multiple piece design pump casings held together by screw connections are not acceptable.
   2. The rear of the pump casing and the front cover shall be protected with replaceable protection plates. The front cover protection plate shall be reversible, constructed of Hardox 500 material or equal, with a minimum Brinell hardness of 550.
   3. Each pump shall have gray cast iron casing and smooth end cover, of 230 – 260 Brinell hardness. The front cover shall be constructed of gray cast iron, with a minimum Brinell hardness of 230 – 260, and permit removal of the rotors without disturbing piping, bearings, and mechanical seals.
   4. All fluid-wetted parts including the mechanical seal shall be replaceable through the quick release front cover without disassembly of coupling, drive unit or the pipe system.

C. Pump Rotor:
   1. Rotors shall be tri-lobe or dual-lobe screw rotor design and shall consist of a non-sludge-wetted cast iron core entirely coated with abrasion-resistant elastomer. The contour of the dual-lobe rotors shall be such that the outside radius of the rotor and the inner radius of the radial liner are identical over a minimum 2 inch sealing line. Stacking of lobes is not acceptable due to maintenance difficulty and possibility of shaft wear.

2. Rotors shall be keyed to the shaft and secured with one central screw to a cylindrical thread inside the shaft. The cast iron core of the rotor shall be equipped with a female thread to enable the removal of the rotor from the shaft with ease. Rotor/shaft designs with a cover disc and/or spring washers are not acceptable.
3. The ratio of the axial length of the lobe as compared to the lobe diameter (length/diameter) shall not exceed 1.0.

D. Pump Shaft:
1. The shafts shall be non-sludge-wetted. The rotor/shaft connection shall be lubricated with quench fluid of the intermediate chamber.
2. The shafts shall be timed in their rotation by straight cut timing gears running in a separate oil chamber, which also contains the ball and roller bearings for each shaft. Sludge wetted rotor/shaft connections are not acceptable.

E. Mechanical Seals:
1. The pumps shall be fitted with maintenance free, quenched mechanical seals. The seals shall be operating in a common oil-filled intermediate chamber (Quench for lubrication and cooling). Purge systems for the seals are not acceptable. The rotating holding bushing shall be locked in a fixed radial position by a keyway that also holds the rotor in place. Seal designs that open during rotor replacement are not acceptable.
2. Oil-quench for protection of the mechanical seal is mandatory. Seal water flush systems are not acceptable.

F. Oil-Filled Chamber:
1. The pumps shall be constructed with an oil-filled intermediate chamber between the pump casing and the gearbox. Oil drain of gearbox and intermediate chamber shall be easily accessible with side mounted drain screw. Oil filled chamber shall have the following functions:
   a. Lubrication and cooling of mechanical seals
   b. Seal failure detection
   c. Buffer zone to the sealed timing gear

2.7 ANCHOR BOLT SIZE AND MATERIAL

A. 3/4-inch minimum Type 316 stainless steel, final size as recommended by manufacturer.

2.8 SPARE PARTS

A. Two (2) spare parts packages, one for the Hospital WWTP and one for the Hon-Dah WWTP, shall be provided. Packages shall be manufacturer standard, including at a minimum:
1. One (1) set of mechanical seals and o-rings for each pump model
2. One (1) set of lobes and o-rings for each pump model
3. One (1) set of axial protection plates for each pump model
4. One (1) set of radial liners for each pump model

2.9 DRIVE MOTORS

A. Drive motor(s) shall be designed, manufactured, and tested in accordance with the latest revised edition of NEMA MG 1. The motors shall be squirrel-cage, suitable for adjustable speed drives. Motor's horsepower shall be as specified above. The motor nameplate horsepower rating shall not be exceeded at any head-capacity point on the pump curve. The motor shall be premium energy-efficient type with guaranteed minimum full-load efficiency of 89.5 percent. The motors shall conform to the following:

Synchronous Speed	1,800 rpm maximum to match driven equipment
Slip	3 percent maximum at full load.
Voltage, Phase, and Frequency	460 volts, 3-phase, 60 Hz.
Mounting	Horizontal.
Enclosure	Totally Enclosed Fan Cooled
Service Factor	1.15
Duty Cycle	Continuous
Ambient Temperature Rating	40 degrees C.
Starting Method	VFD, forward and reverse
Starting current	NEMA Code G.
Bearing Lubrication	Manufacturer's standard.
Bearing Life	100,000 hours minimum rating life as defined by AFBMA standards.
Coupling	As provided by the pump manufacturer.

B. Provide motor modifications and accessories as follows:
1. Drains and breathers for moisture removal. Provide weep holes and drain plugs for all TEFC motors.
2. Continuous operation at rated horsepower and full service factor at elevations specified above.
3. Screens over all air openings.
4. Sealed winding insulation.
5. Thermal protection system consisting of thermistors and a monitoring relay Three thermistors shall be embedded in the coils, one in each phase, protecting the stator windings from damaging temperatures. A thermistor monitoring relay operating at 120 volts shall be mounted in a NEMA 4 enclosure mounted near the main conduit box where it does not obstruct access to that box, or in control panel. Coordinate with the Division 26, ELECTRICAL-WWTP subcontractor. A monitoring relay contact for external use, rated 5 amps, 120 volts minimum, shall close automatically on abnormally high thermistor temperature, and open automatically when the winding temperature has returned to a non-damaging level.
6. Grounding terminal box for entrance of conduits, sizes as shown on the Drawings.
7. Tachometer feedback speed indication.

2.10 ELECTRICAL AND CONTROLS

A. Electrical power and variable frequency drives (VFDs) will be provided under Division 26, ELECTRICAL-WWTP.

B. Controls will be provided under the applicable instrumentation and control sections in Division 40, PROCESS INTERCONNECTIONS-WWTP.

PART 3 - EXECUTION

3.1 PREPARATION FOR SHIPMENT, SHIPMENT, AND PROTECTION

A. Equipment shall be prepared and protected for shipment and shipped in accordance with the requirements of Section 016000, PRODUCT REQUIREMENTS of Division 01, GENERAL REQUIREMENTS. In addition, the following shall be done:
   1. After testing and before dismantling for shipment, all wiring and mechanical connections shall be matchmarked or tagged to ensure proper field assembly.
   2. The Contractor shall make arrangements for extra protection until final installation if units are to be stored outside.

3.2 GENERAL

A. Care during storage and procedures for installation, lubrication and startup of the pumps and motors shall be in strict conformance with the manufacturer's instructions. In addition, the instructions for installation, operation and maintenance from the Hydraulic Institute Standards shall be adhered to where applicable.

3.3 PUMP AND DRIVER EQUIPMENT INSTALLATION

A. Install the pumps in accordance with the pump manufacturer's directions and these Specifications. The pump installation shall be supervised by a manufacturer's representative and shall be approved by this representative prior to operating pumps.

B. Handle carefully and protect the pump and appurtenances to avoid damaging the equipment.

C. Mount pumps and drivers on concrete bases as shown on the Drawings. Bolts shall be accurately placed with templates. Coat bolt thread projections with lubricant to facilitate future nut removal.

D. Level base by means of steel wedges (steel plates and steel shims). Wedge taper shall not be greater than 1/4-inch per foot. Use double wedges to provide a level bearing surface for the pump base. Secure each pair of wedges in their final positions with one tack weld on each side after leveling is complete. Accomplish wedging so that there is no change of level or springing of the baseplate when the anchor bolts are tightened.

E. Adjust pump assemblies such that the driving units are properly aligned, plumb, and level with the driven units and all interconnecting shafts and couplings. Flexible couplings shall not be considered to compensate for misalignment.

F. After the pump and driver have been set in position, aligned, and shimmed to the proper elevation, grout the space between the bottom of the baseplate and the concrete foundation with a poured, non-shrinking grout of the proper category, prepared and installed in accordance with Section 033000, CAST IN PLACE CONCRETE-WWTP.

G. All strain from attached piping shall be eliminated from the pumps. Any evidence of pump misalignment, noisy operation, or other signs of improper setting shall be corrected by the Contractor.

H. The equipment shall be provided with all necessary factory lubrication. Before initial startup at final installation, lubrication for all bearings, gears, etc. shall be checked in accordance with the pump and/or motor manufacturer's recommendations.

3.4 PAINTING

A. Exterior shop and field painting shall be as specified in Section 099600, HIGH PERFORMANCE COATING-WWTP.

3.5 FIELD TESTS

A. Functional Test: Prior to plant startup, all equipment described herein shall be inspected for proper alignment, quiet operation, proper connection, proper rotation, and satisfactory performance by means of a functional test.

B. Vibration Test: The complete assembly, consisting of the driving unit and pump and flexible shafting where shown, connected and in normal operation, shall not develop amplitudes of vibration exceeding limits recommended by the current edition of Hydraulic Institute Standards at any operating speed within the range specified.

C. Performance Test:
   1. The Contractor, with the assistance of the pump manufacturer's representative, shall perform field performance tests on all pump assemblies to demonstrate their conformance to the Specifications to the satisfaction of the Engineer. A test log shall be presented to the Engineer upon the completion of each test that records the following:
      a. Flow, as measured by plant instrumentation and/or storage volumes.
      b. Pump suction and discharge pressures measured by calibrated gauges and converted to feet of the liquid pumped and corrected to pump centerline, calculated velocity heads at the suction and discharge flanges, and total head, all tabulated in feet.
      c. Driving motor voltage and amperage measured for each phase.
      d. Motor manufacturer's guaranteed power factor and efficiency at 1/4, 1/2, 3/4, and full load.
   2. Units failing to meet the Specifications to the satisfaction of the Engineer must be replaced or more accurately tested in accordance with Hydraulic Institute Standards. If the pump fails the second test, the unit will be rejected, and the Contractor shall furnish a unit that will perform as specified.

3.6 MANUFACTURER'S CERTIFICATE(S)

A. Provide manufacturer's certificate(s) in accordance 019113, GENERAL COMMISSIONING REQUIREMENTS of Division 01 GENERAL REQUIREMENTS. The certificate shall show:
   1. That the handling of pump equipment was satisfactory to the manufacturer.
   2. The installation is as specified and is acceptable to the manufacturer.
   3. Include all results and testing data recorded during field testing.

END OF SECTION

SECTION 433230 – ODOR CONTROL BIOFILTER SYSTEM – WWTP

PART 1 - GENERAL

1.1 WORK INCLUDED

A. This section covers the work necessary to furnish, install, and test, complete, the headworks odor control system for the for the Hospital WWTP and Hon-Dah WWTP.

B. The system shall be a single-stage, biological trickling filter. Equipment furnished by the odor control system Manufacturer (Mfr) shall include a fan, grills and media support to be installed in the biofilter vessel, media, humidification spray water nozzles, and controls. The system Manufacturer shall supply all equipment and process components required for a complete, functional system.

C. The Contractor shall provide the biofilter vessel and all required appurtenant materials, as shown on the Drawings and in accordance with these Specifications to connect the odor control system to the Headworks screening system exhaust ducts. The Contractor shall furnish all materials, whether specified or not, as necessary to complete all system connections.

D. All equipment shall be compliant with Federal Acquisition Register the clause 52.225-11, Buy American-Construction Materials under Trade Agreements (Nov 2023) and provision 52.225-12, Notice of Buy American Requirement-Construction Materials under Trade Agreements (May 2014).

1.2 EQUIPMENT NUMBERS

Equipment Description	Hospital WWTP Equipment Numbers	Hon-Dah WWTP Equipment Numbers
Fan	1820-BLR-01	2820-BLR-01
Solenoid Valve	1820-SOV-01	2820-SOV-01
Odor Control System Control Panel	LCP-1820-01	LCP-2820-01

1.3 REFERENCES

A. NEC: National Electric Code.

B. ANSI: American National Standards Institute.

1.4 SUBMITTALS

A. The following submittals for construction shall be made in accordance with the project submittal requirements as described in the GENERAL CONDITIONS and Section 013300, SUBMITTAL PROCEDURES.

1. Drawings of system showing assemblies, arrangements, piping, electrical, mounting details, equipment outline dimensions, fitting size and location, blower data, and operating weights of all equipment. Plan and elevation views shall be supplied of all components.
2. Manufacturer’s performance data and curves for fan, and auxiliary components.
3. Materials of construction of all equipment and Manufacturer’s information on the biological media.
4. Complete control, logic, and power wiring diagrams for the control panel and fan. Drawings much show landings and connections that must be completed in the field.

5. Installation, operation, and start-up procedures including lubrication requirements.
6. Certifications: Qualifications cited herein.
7. Test Reports:
   a. Performance test reports

1.5 MANUFACTURER'S SERVICES

A. In addition to being available by phone to assist the Contractor during the off-loading, installation, and startup of the equipment, a qualified Manufacturer's representative shall be available at each WWTP for the following times and services, travel time excluded:
   1. Total of 2 trips.
   2. 1 day for installation verification and startup guidance.
   3. ½ day for Owner's personnel training.

B. A qualified Supplier's representative shall be one who has had at least 2 years of experience in the installation and startup of the equipment specified herein.

C. Startup services and training of Owner's personnel shall be at such times as requested by the Owner.
   1. Engineer and Owner will be present at that time and develop a punch list of items to be completed before Final Completion.

1.6 OPERATION AND MAINTENANCE MANUALS

A. Submit operations and maintenance manuals for the equipment in compliance with the Contract documents, 15 days prior to shipment. Provide one pdf copy of the manual and two hard copies.

B. Manuals shall include:
   1. Contact name, address, and telephone number of the equipment manufacturer's Service Department and Parts Department.
   2. Descriptive literature, including illustrations, covering the operational features of the equipment, specific for the particular installation, with all inapplicable information omitted or marked out.
   3. Operating, maintenance and trouble-shooting information.
   4. Complete maintenance parts list.
   5. Complete connection, interconnecting and assembly diagrams.
   6. Approved shop drawings including complete electrical information.

1.7 QUALITY ASSURANCE

A. Qualifications
   1. The Manufacturer shall be recognized in the design, manufacture, and operation of biological odor treatment systems.
   2. The materials covered by these specifications are intended to be standard equipment of proven reliability and as manufactured by a reputable manufacturer having experience in the design, production, and testing of biological odor control treatment. The equipment furnished shall be designed and constructed in accordance with the best practices and methods and shall operate satisfactorily when installed as shown on the Contract Drawings and operated per the manufacturer's recommendations.

3. The Manufacturer shall have at least 10 years of experience in design and fabrication of biological odor control systems similar to the type specified for this Project.
4. The manufacturer's place of business shall be open for inspection.
5. The manufacturer must be able to provide the Owner with training and monitoring support service during the first year of operation.

1.8 WARRANTY

A. Contractor shall warrant the entire system, both in material and workmanship for a period of eighteen (18) months from the date of final acceptance.

B. The equipment shall be warranted to be free from defects in workmanship, design and materials. If any part of the equipment should fail during the warranty period, it shall be repaired or replaced and the complete system restored to service at no expense to the Owner.

C. The biological media shall be guaranteed for 5 years from the date of delivery.

1.9 EQUIPMENT GUARANTEE CERTIFICATION FORM

A. Contractor shall obtain and submit to the Engineer and Owner certification from the odor control system Manufacturer that the system meets the requirements of the intended application and contract specifications. This certification shall be provided by way of the Equipment Guarantee Certification Form attached to this specification.

PART 2 - PRODUCTS

2.1 GENERAL

A. The odor control system shall remove hydrogen sulfide, and other odorous compounds from the foul air stream. The hydrogen sulfide shall be oxidized by autotrophic bacteria, and heterotrophic bacteria shall oxidize other organic odorous compounds. The media shall be intermittently irrigated using non-potable water and a sump shall be provided to collect the drain water at the bottom of the vessel before being either sent to waste and/or recirculated. The drain water shall drain off to a designated site drain location.

B. The biological treatment shall utilize a structured high surface area biomedia to facilitate the bio treatment of odorous compounds. This media should be designed not to compact or plug for a period of 5 years. The biological treatment shall operate with an independently controlled irrigation system to maintain optimum wetted conditions to support unique microbial growth for biological destruction of the odorous compounds and removal of toxic metabolites. Systems using any type of proprietary packed media shall not be acceptable.

C. Scope of Supply:
1. Single biotrickling filter vessel (provided by Contractor).
2. Media shall be coarse, shredded, composted root wood (by system Mfr).
3. Fiberglass screen, plastic grills and legs to support media (by system Mft).
4. Odor control fan to move the odorous air from the source and be able to compensate for all pressure losses at the design airflow (by system Mfr).
5. An electric control panel housing a single programmable logic controller (PLC) system with Human Machine Interface (HMI) and other components required for the control and monitoring of the system (by system Mfr).
6. Timer in control panel to control spray nozzle water feed valve (by system Mfr).

2.2 MANUFACTURERS

A. Materials, equipment, components, and accessories specified in this Section shall be products of:
   1. Neutratek, Ambio-Biofilter
   2. Engineer approved equal.

2.3 SERVICE CONDITIONS

A. The order control system shall be designed to remove the odorous constituents from process air stream under the following operating conditions:

Process Parameter	Value
Elevation Above Sea Level	Hospital WWTP 5630 ft Hon-Dah WWTP 7160 ft
Location	Outdoors
Inlet Air Temperature	20 to 110 Degree F
Type of Containment	H_2S, mercaptans, methane, and other constituents typically associated with offgas from wastewater conveyance
H_2S at Inlet	Average 10 ppm

B. The biological vessel design shall conform to the following parameters:

Design Parameter	Value
Vessel Type	Single-stage tank
Material of Construction	Non-corrosive
Airflow	25 cfm
Operational Pressure Drop across Vessel	<1.5 in. w. c.
Maximum Suction Head	2 in. w.c.
Minimum Vessel Diameter	36 inches
Minimum Residence Time	60 seconds
Total height	7.5 feet
Media Bed Depth	5 feet
Media Bed Surface Area	5 square feet
Water Supply	4 gpm @ 40-60 psi
Fan Size	0.5 hp

C. System Performance: The odor control system shall demonstrate following performance when operating under design flow conditions listed above:
   1. The system shall remove on average 95% of the inlet hydrogen sulfide or have an outlet concentration of <0.5 ppm, when H2S inlet is <10ppm.
   2. The outlet odor level shall be less than 1,000 odor units.

D. All components of the system shall be compatible with the conditions and chemicals to which they will be subjected to during normal operation, which include but are not necessarily limited to:
   1. Hydrogen Sulfide
   2. Sulfuric Acid
   3. Carbon Disulfide and other Sulfides/Disulfides
   4. Mercaptans

5. Methane

2.4 MATERIALS OF CONSTRUCTION

A. Vessel and Appurtenances Materials of Construction:
   1. Any material that does not corrode, such as aluminum, 304 stainless steel, plastic, concrete, or fiberglass reinforce plastic (FRP), unless otherwise specified herein.

2.5 SYSTEM COMPONENTS

A. Identification:
   1. Major system components, including the fan, shall have the following information engraved on stainless steel nameplates of appropriate size for the equipment involved.
      a. Name of Manufacturer
      b. Manufacturer Serial Number
      c. Year Built
      d. Equipment Name, Model, and Serial Number
      e. As applicable: capacity, performance limitations

B. BioFilter Vessel:
   1. The vessel shall be free standing or skid mounted with the fan.
   2. Vessel and connection couplings shall be of non-corrosive materials.
   3. All metal components shall be Type 316 stainless steel or better.
   4. Vessel shall be sized to provide a media height above the support grills of 5 feet and a minimum of 5 square feet of media surface area.
   5. Vessels shall have connection points for air inlet (low) and outlet (high), spray water (high), and drain (low).
   6. Vessel shall have an access port for convenient replacement of the media.

C. Biofilter Media
   1. The bed material shall be coarse, shredded, composted root wood.
   2. Sufficient media shall be provided to ensure the performance requirements of this specification are met.

D. Spray Water
   1. Biofilter shall be configured with an irrigation system which shall evenly distribute the irrigation water over the entire upper surface of the media layer.
   2. Each irrigation system shall be tested by the Manufacturer and a certificate of conformity supplied with the shop drawings to show that the nozzle has been tested and meets the Manufacturer's standards for uniform distribution.

E. Odor Control Fan
   1. The fan shall be centrifugal PP or FRP with 316SS shaft and airstream components designed for corrosive environment. As manufactured by Cincinnati Fan, or pre-approved equal. Fan shall be appropriately sized by the system Manufacturer to include losses through the entire system.
   2. HOUSINGS: All housings shall be materials appropriate for exposure to sewage gases and low pH environment. All units shall be built with an adjustable discharge housing which can be field rotated to any of eight standard positions.

3. WHEELS: The wheel shall be of the radial bladed backplate or backward curved design, and shall be made of materials appropriate for exposure to sewage gases and low pH environment. Wheels shall be statically and dynamically balanced.
4. MOTORS: The fan motor shall be a TEFC electric motor for operation on 208V, 1ph, as manufactured by US Motors, Baldor, Reliance, Weg or pre-approved equal.
5. Motor bearings shall have a minimum L-10 life, as defined by AFBMA, of at least 40,000 hours (200,000 hours average life).
6. BALANCING: Prior to shipment all fans shall be completely assembled and test run as a unit at the operating speed. Final balance of the completed fan assembly shall be taken by electronic equipment. Records of the vibration readings in the axial, vertical, and horizontal planes shall be maintained and a written copy of this record shall be available upon request.
7. Fan noise shall be less than 75 dBA at 3 feet from the system or less than 50 dBA at 10 feet.

F. Accessories:
1. Media supports, spray nozzles, and solenoid valve shall be provided by the system Manufacturer.

G. Fasteners:
1. All fasteners shall be Type 316 stainless steel and designed for the specified loads.

2.6 CONTROL SYSTEM

A. Control panels and electronic communication devices must comply with all US Federal regulations.

B. The control panel shall be labeled as follows: At the Hospital WWTP it shall be labeled: “Odor Control System Control Panel LCP-1820- 01.” At the Hon-Dah WWTP it shall be labeled: “Odor Control System Control Panel LCP-2820- 01.”

C. Power: The control panel shall accept a 208 volt, 60 hertz, 1 phase AC power input. When the disconnect is in the open position, all power shall be removed from the control system. A transformer shall be included that will provide 120 volts for the control system.

D. Control Panel:
1. The control panel will be located in an unclassified area.
2. Panel Enclosure: The control panel shall be a UL primary control panel in a NEMA 4X, type 304 stainless steel enclosure with thermostat and ventilation fan, skid mounted. The panel shall be a totally enclosed, front access type with indicating devices and switches mounted on the front door. The door(s) shall be lockable and fitted with a pneumatic hold open device. The control panel shall be sized to house all required equipment.
3. The control panel shall house the VFD for the fan motor.
4. The control panel shall include short circuit protection for system components and any digital displays, switches, lights, relays, and other control devices required for a complete operable system.

E. Controls:
   1. Narrative: The fan shall run continuously with manual ON-OFF operation only. The spray water for irrigating the media shall be controlled with a solenoid valve for intermittent irrigation. Irrigation shall also be possible manually, overriding the timer. Spray nozzles shall restrict flow to achieve appropriate irrigation water flow rates. The inlet air moisturizing spray shall operate continuously; a nozzle shall restrict flow to an appropriate flow rate.
   2. The control panel shall have the following functions at a minimum:
      a. Fan OO switch
      b. Fan RUN indication
      c. Fan FAIL indication
      d. Fan RESET
      e. Fan ETM
      f. Irrigation timer setpoint adjustment
      g. Timer override for manual irrigation
      h. Communication capabilities to send fan alarm notification to the plant control system (PCS).

F. Manufacturer shall provide the final version of PLC and HMI programs.

2.7 SPARE PARTS

A. At a minimum, the following spare parts shall be supplied with the equipment for each WWTP:
   1. One (1) set of solenoid valve.
   2. One (1) fan.

PART 3 - EXECUTION

3.1 FACTORY ACCEPTANCE TEST

A. Electrical Control Panel: Electrical control panel shall be inspected prior to shipping for conformance to the following:
   1. NEMA rating according to this specification
   2. Control panel shall be tested for proper communication and functionality.
   3. All wiring between panel components and terminal strips shall be checked for proper labeling and connection.

B. Spray Nozzles: Irrigation system shall be factory tested to ensure compliance with Manufacturer standards for uniform distribution.

3.2 RECEIVING OF EQUIPMENT

A. The Owner reserves the right to refuse delivery of any or all pieces of equipment found, upon inspection, to have any defects in workmanship or materials.

3.3 STORAGE AND HANDLING OF EQUIPMENT

A. The Contractor shall store and temporarily support equipment prior to installation in strict accordance with the Manufacturer’s recommendations and instructions. Protect all exposed surfaces. Keep records of the storage parameters and the dates that storage procedures were performed. The Contractor shall be responsible for work, equipment and materials until inspected, tested and finally accepted.

B. Protect the equipment from being contaminated by dust, dirt, vibration and moisture.

C. The biological odor control system shall be shipped complete. The unit shall be erected in strict accordance with the instructions of the Manufacturer's field engineer.

3.4 INSTALLATION

A. Contractor shall provide means of anchoring the vessel and accessories in place.

B. Installation of all equipment shall be in accordance with Manufacturer's written installation and startup instructions and by workers experienced in the handling of electrical work, plumbing and instrumentation. The final installation must be certified by the Manufacturer as complete and correct.

C. The Manufacturer shall provide the Contractor with required clearances, tolerances and limitations, and shall be available to answer questions prior to and during the installation of the equipment.

D. Contractor shall install water supply, air inlet piping, electrical service for all required equipment which may include, but is not limited to, fan, valves and controls, and all other accessories and appurtenances as may be required by the Manufacturer for a complete and operational system.

3.5 FIELD QUALITY CONTROL

A. Functional Test:

1. Upon completion of the installation each piece of equipment in each system shall be tested for satisfactory operation without excessive noise, vibration, overheating, proper rotation, etc. Compliance shall be based on equipment Manufacturer specifications and all applicable codes and standards. All equipment must be adjusted and checked for misalignment, clearances, supports and adherence to safety standards.

3.6 SYSTEM STARTUP

A. General:

1. The contractor shall be responsible for the successful startup, operation and testing of each odor control system. The Manufacturer shall provide supervisory assistance, instrumentation and testing services required during this phase of the work.
2. Start-up shall commence following certification of the installation by the Manufacturer's technical representative.

B. An acclimation period of 6 weeks shall be allowed for the system to grow the needed biomass to perform adequately.

C. Contractor must inspect the system daily during the acclimation period and communicate operating parameters as measured to Manufacturer. Manufacturer shall provide guidance to contractor in operating parameter changes to obtain specified performance.

D. Any special tools or instruments required for this startup/acclimation period shall be provided by the Manufacturer.

E. After satisfactory startup and acclimation period, operation of the system may be transferred to the Owner.

END OF SECTION

SECTION 433269 – CHEMICAL FEED SKID – PERISTALTIC PUMPS – WWTP

PART 1 - GENERAL

1.1 WORK INCLUDED

A. This section covers the work necessary to completely furnish and install Sodium Hypochlorite chemical feed systems for the reuse water for the Hospital WWTP and Hon-Dah WWTP. The work includes all manufacturer supplied components, mounting requirements, tubing, and chemical injection appurtenances.

1.2 EQUIPMENT NUMBERS

A. Hospital WWTP
   1. Sodium Hypochlorite Feed Pump: 1650-P-01
   2. Sodium Hypochlorite Feed Pump 1650-P-02

B. Hon-Dah WWTP
   1. Sodium Hypochlorite Feed Pump: 2650-P-01
   2. Sodium Hypochlorite Feed Pump 2650-P-02

1.3 GENERAL REQUIREMENTS

A. Like items of materials specified hereunder shall be the end products of one manufacturer and/or supplier in order to achieve standardization for maintenance and replacement.

B. See GENERAL CONDITIONS and Division 1, GENERAL REQUIREMENTS, which contain information and requirements that apply to the work specified herein and are mandatory for this project.

C. The chemical feed systems shall be furnished and erected at the location shown in the Drawings, complete with all hardware and accessories.

D. All equipment shall be compliant with Federal Acquisition Register the clause 52.225-11, Buy American-Construction Materials under Trade Agreements (Nov 2023) and provision 52.225-12, Notice of Buy American Requirement-Construction Materials under Trade Agreements (May 2014).

1.4 MANUFACTURER'S SERVICES

A. A qualified manufacturer's representative shall inspect the installation after completion of the work and shall recommend in writing to the Contractor all necessary adjustments to the equipment for satisfactory operation.

B. A qualified manufacturer's representative for the equipment specified shall be present at each WWTP for a minimum of 1/2 day, not including travel time, for installation assistance, functional testing, jobsite training, and certification of each of the installations.

C. Manufacturer's representative shall perform the following services:
   1. Check the completed installation and provide written certification to the Engineer that the unit is properly installed and ready for operation.
   2. Provide training of Owner's operating and maintenance personnel in equipment operation, maintenance, and troubleshooting.

D. A qualified Supplier's representative shall be one who has had at least 2 years of experience in the installation and startup of the equipment specified herein.

E. Startup services and training of Owner's personnel shall be at such times as requested by the Owner.
   1. Engineer and Owner will be present at that time and develop a punch list of items to be completed before Final Completion.

1.5 SUBMITTALS

A. Submittals shall be made as required in Section 013300, SUBMITTAL PROCEDURES. In addition, the following specific information shall be provided:
   1. Detail drawings, and descriptions of all items of equipment, showing all dimensions, parts, construction details, and materials of construction. This includes, but is not limited to, chemical feed pumps, piping, isolation valves, overpressure valves, backpressure valves, calibration columns, pump mounting skids, injection quills, sampling equipment, and personal protective equipment.
   2. Proposed factory and field test descriptions in sufficient detail to fully describe the specific tests to be conducted and quantities to be measured to demonstrate full conformance with these Specifications.
   3. Motor data and information on pumping rate actuator mechanism and control station.
   4. Make, model, and performance data of each equipment assembly.

1.6 WARRANTY

A. The chemical metering pump manufacturer shall provide a two-year limited warranty on the metering pump from the date of purchase.

PART 2 - PRODUCTS

2.1 GENERAL

A. The equipment furnished shall be the product of a manufacturer capable of demonstrating previous successful operating installation of similar size, design, and application.

B. The chemical feed pumps shall be a complete, self-contained package with field assembly limited to chemical inlet and outlet hook-ups, and power and control connections.

C. "Basis-of-Design Products:" The first named Manufacturer's system was used as the Basis of Design for this Specification and the Drawings. The structures and facilities appurtenant to the chemical feed pumps shall meet the basis of design in quality and capacity. Equipment furnished by all qualified, interested Manufacturers will be considered, provided the necessary structural, electrical, and mechanical changes are submitted in conformance with the requirements of the GENERAL CONDITIONS and DIVISION 1, GENERAL REQUIREMENTS. The Contractor shall be responsible for all design changes associated with other Manufacturers' equipment and shall bear all costs for necessary changes for a complete and satisfactory installation.

D. Materials shall be the manufacturer's standard for the intended service specified hereinafter unless otherwise specified.

E. Nameplates with the name of the Manufacturer, equipment model number and all other pertinent data shall be affixed at a visible and accessible location on all equipment.

2.2 EQUIPMENT MANUFACTURERS

A. Blue-White, FlexFLo M series

B. Or equal

2.3 PUMP SERVICE CONDITIONS AND PERFORMANCE REQUIREMENTS

A. Chemical metering pumps shall be positive displacement, peristaltic type tubing pump with brushless variable speed motor. The pump shall have corrosion resistant housing. Pump shall be capable of running dry without damage and shall have suction lift of 30 feet of water. Output volume from each pump shall be adjustable while pumps are in operation. Chemical metering pumps shall be capable of injecting solutions against pressures up to 100 psi. Chemical feed pumps shall provide accurate rate throughout the range of feed. Design conditions for the chemical feed pump are as follows:

Location	Hospital WWTP	Hon-Dah WWTP
Product Pumped	Sodium Hypochlorite	Sodium Hypochlorite
Minimum Feed Rate (GPH)	0.050	0.026
Maximum Feed Rate (GPH)	1.676	1.388
Maximum Pump Capacity (GPH)	5.6	5.6

B. The pump head shall be a single, unbroken track with a clear removable cover. Tube failure detection sensors shall be wholly located in the pump head. Tube failure detection system shall trigger when liquid makes contact.

C. Squeeze rollers with encapsulated bronze sleeve bearings shall be directly coupled to a two-piece thermoplastic rotor. Three Nylon rollers shall be provided and shall be located 120 degrees apart. The roller diameters and occlusion gap shall be factory set to provide optimum tubing compression; field adjustment shall not be required.

D. Rotor assembly shall be installed on a D-shaped, chrome-plated motor shaft and removable without tools. For tubing installation and removal, rotor assembly shall be rotated by the motor drive. Hand cranking of the rotor assembly shall not be required.

E. Pump head and tubing compression surface shall be corrosion resistant Valox thermoplastic. The pump head cover shall be clear, acrylic thermoplastic with a bronze sleeve bearing fitted to support the overhung load on the motor shaft. Cover shall be positively secured to the pump head using a minimum of three thumb screws.

F. To ensure pump performance and accuracy, only tubing provided by the manufacturer is acceptable. Pump tube shall be assembled to connection fittings of PVDF material. Connection fittings shall be permanently clamped to the tubing with stainless steel clamps. To prevent tubing misalignment and ensure accuracy, fittings shall insert into keyed slots located in the pump head and secured in place by the pump head cover. Connection fittings shall be ½” M/NPT.

G. The drive system shall be factory installed and totally enclosed in a NEMA 4X wash-down enclosure. The pump shall have a universal power supply that allows it to operate at a supply voltage in the range of 100-230 VAC +/-10%, 50-60Hz, single phase. The enclosure shall be Valox and PA12 thermoplastic. Provide nylon level mounting brackets and hardware.

H. One spare pump for each chemical shall be provided for each wastewater treatment plant. The pump will not be installed and will be packed and stored as a replacement in the treatment plant. The pump shall be pre-set with identical settings to the in-service pump to expedite replacement.

2.4 PUMP PROGRAMMING AND CONTROL

A. All control circuitries shall be integral to the pump.

B. All control circuitries shall be integral to the pump and capable of adjusting the pump motor speed from 0.01% to 100.0% in 0.01% increments less than 1% motor speed, in 0.01% increments between 1% and 10% motor speed, and in 0.1% increments greater than 10% motor speed (10,000:1 turndown ratio).

C. The pump output shall be capable of being manually controlled via front panel user touchpad controls. The pump motor speed shall be adjustable from 0.01% to 100.0% in 0.01% increments less than 1% motor speed, in 0.01% increments between 1% and 10% motor speed, and in 0.1% increments greater than 10% motor speed.

D. The pump shall be capable of being remotely controlled via 4-20mA analog input. The input resolution shall be 0.01 of input value and capable of adjusting the pump motor speed from 0% to 100.0% motor speed in 0.1% increments. Four values shall be user configurable to define the low and high points on the output slope: a low input value, the required pump percentage of motor speed at the low input value, a high input value, the required pump percentage of motor speed at the high input value.

E. Provide an 8-button front panel user touchpad control for stop/start, FVS, lockout key, display reading, operating mode selection, remote start/stop activation, and priming.

F. Provide a single color 7 segment LCD display for menu driven configuration settings, pump output value, tube failure detection (TFD) system, flow verification system (FVS), and remote input signal values.

G. Provide for remote stop/start pump via a non-powered contact closure loop.

H. Provide a 4-20mA output signal, motor speed.

I. Provide one solid state relay and one contact closure relay. Solid state relay shall trigger when motor is active. Contact closure relay shall trigger with any of the following pump functions: TFD system, FVS system, motor run/stop, and any pump error code.

J. Provide a lock-out button that shall disable use of manual adjust up and down buttons.

K. Provide a flow verification system with programmable alarm delay time from 1-20 seconds. FVS system shall monitor the FVS flow sensor while pump is running only. System shall not monitor pump while not running.

L. Flow Verification Sensor shall output high-speed digital pulse signal or 4-20 mA, while pump is running only, to verify chemical injection.

1. Flow verification sensor shall be an ultrasonic transit time sensor.
2. Wetted components shall be PVDF (optional PVC), PEEK, and TFE/P (optional EP).
3. End fittings shall be PVDF with optional PVC slip fittings. All are included.
4. Shall provide a scalable 4-20 mA sourcing output.
5. Shall provide a scalable 0-10,000 Hz open collector frequency output
6. Shall provide a programmable Form C Solid State Relay rated for a maximum load capacity of 24 VDC and 100 mA.
   a. Programmable for high/low flow rate alarm.
   b. Programmable to energize on specified flow total.
7. Power Requirements: 5 VDC; 5 Watts maximum.
8. Accuracy shall be +/- 0.75% full scale. Accuracy shall be +/- 0.25% at the field calibrated setpoint.

2.5 OVERALL CONTROL NARRATIVE

A. The Plant Control System (PCS) will provide overall system control.

B. Operators will enter a sodium hypochlorite dose (flow rate) at the PCS main computer. The PCS will assign lead and lag pump status to the feed pumps. The PCS will call the lead pump to run at the set dosing rate. The lead pump will operate at this rate until an operator changes the rate, switches the lead and lag pumps, turns the pump off, or a fault occurs.

C. All pump faults shall be communicated to the PCS as a general fail.

D. If a pump stops due to a fault, the PCS will demote the faulted pump to lag status and call the second pump to run as lead pump.

E. Switching lead and lag status when not due to a fault, will be manual by operator input.

F. In the event of a fire alarm in the building, all feed pumps shall stop.

2.6 OTHER PUMP SKID COMPONENTS

A. The pumps and all system components shall be mounted on a support skid suitable for mounting as shown on the Drawings. The skids shall be constructed with adequate supports for all equipment and piping and a ½” drip lip. A single chemical metering pump Manufacturer shall be responsible for supplying and assembling all components of the skid and for testing the skid mounted metering system prior to shipment. The skid shall be pre-engineered and include all pre-piped accessories as listed in this specification.

B. A ½-inch diameter, adjustable-pressure, diaphragm-type back pressure/anti-siphon valve shall be provided. Back pressure valve shall be suitable for maintaining a constant back pressure without noise or cycling and shall be serviceable in-place. Materials shall be PVC body and PTFE/EPDM diaphragm. The valves shall include an externally adjustable pressure setting.

C. An in-line, adjustable-pressure, diaphragm-type pressure relief valve with a relief line connection shall be provided with each system.

D. A clear calibration column with FNPT fitting on top and bottom shall be provided with each system. The column shall be sized to provide at least 30 seconds draw down at maximum pump capacity with graduations in mL/hr and GPH.

E. The pumps shall be installed on the skid with the pump head exposed to full accessibility for removal for service and maintenance with no disassembly of the system piping and accessories.

2.7 CHEMICAL INJECTION QUILL ASSEMBLY

A. Provide retractable injection quill assemblies for injection of sodium hypochlorite into the reclaimed water piping. All injection quill assembly materials must be compatible with the chemical to be injected. All wetted parts must be non-metallic due to the corrosive nature of the chemicals.

B. The injection quill assembly must allow for insertion or withdrawal of the solution tube from the reclaim water piping while the pipe is in service and under pressure.

C. The injection quill shall be sized for the process pipe diameter shown on the Drawings and mechanical Detail 15800.

D. Injection quill assembly shall be Saf-T-Flo EB 164 or approved equal.

E. Provide the injection quill with the following materials:
   1. Compression gland and corporation stop/ball valve: CPVC
   2. Solution tube: CPVC, insertion length of 2 inches
   3. Ball check valve: EPDM seat
   4. Injection quill tip: EPDM Saf-T-Seal tip or approved equal
   5. Flexible tubing: Clear braided reinforced PVC with transition fittings compatible with the chemical feed piping and the injection quill assembly.

2.8 ELECTRICAL SYSTEMS

A. General – The electrical system shall meet all requirements of the National Electric Code and provide adequate service for all equipment. Lighting, heat, exhaust fan, and outlet receptacles electrical wiring shall be installed in the chemical room and connected to the existing electrical panel.

B. Pump power supply: 120Vac; provide minimum 6-ft power cord and NEMA 5-15 plug for each pump.

PART 3 - EXECUTION

3.1 GENERAL

A. The equipment specified herein shall be located as shown and installed in conformance with the manufacturer’s suggested method as approved and further specified hereunder.

B. Pump skids shall be mounted as shown on the Drawings. Pumps, tubing, valves, and all appurtenances shall be mounted in an orderly and neat manner running parallel to walls and floors and properly secured.

C. Ensure all manufacturer fastened fittings, valves and unions are tightened to their recommended specification.

D. All work shall be completed in accordance with the applicable portions of the Uniform Building Code, Uniform Plumbing Code and the National Electrical Code.

E. Chemical injection assembly with pipe tap and saddle shall be installed per Section 400510, PIPING GENERAL-WWTP.

3.2 FACTORY TESTS

A. The chemical feed pumps shall be factory tested to assure proper functionality and compliance with the specifications.

3.3 STARTUP AND TESTING

A. All pumps and skid components shall be verified to be installed properly and function as intended prior to starting up the pumps.

B. Verify that pumps are producing the rated flow rates.

C. Simulate alarm conditions and verify that alarming is occurring as intended.

D. The manufacturer(s) representative(s) shall certify that the equipment is functioning properly.

3.4 MANUFACTURER'S CERTIFICATE OF INSTALLATION

A. Furnish manufacturer's certificate of proper installation in accordance with Section 019113, GENERAL COMMISSIONING REQUIREMENTS for the chemical feed pumps.

END OF SECTION

SECTION 434010 – CHEMICAL STORAGE AND CONTAINMENT – WWTP

PART 1 - GENERAL

1.1 WORK INCLUDED

A. This section applies to the wastewater treatment plants at the IHS Hospital Utility Campus and the IHS Hon-Dah Utility Campus.

B. This section covers the work necessary to furnish and install, complete, the high density cross-linked polyethylene bulk chemical and reclaim water storage tanks, seismic restraint systems, and appurtenances.

C. This section also includes secondary containment and other chemical containment equipment.

D. All equipment shall be compliant with Federal Acquisition Register the clause 52.225-11, Buy American-Construction Materials under Trade Agreements (Nov 2023) and provision 52.225-12, Notice of Buy American Requirement-Construction Materials under Trade Agreements (May 2014).

1.2 EQUIPMENT

A. Aluminum Sulfate (AL) Storage Tanks

B. Sodium Hydroxide (NAOH) Storage Tanks

C. MicroC-2000 (MIC) Storage Tanks

D. Reclaimed Effluent Tanks

E. Other equipment covered by this section is not numbered.

1.3 GENERAL

A. See GENERAL CONDITIONS and Division 01, GENERAL REQUIREMENTS, which contain information and requirements that apply to the work specified herein and are mandatory for this project.

B. Details of the tanks including dimensions, locations and details of nozzles and manways shall be as specified hereinafter and/or as generally shown in the Drawings. The tanks, along with all fittings and appurtenances that penetrate the tank walls and all seismic restraints, shall be provided by a single supplier to achieve standardization for compatibility of products, appearance, and ease of maintenance and operation.

C. All tanks and secondary containment equipment required by this section shall be provided by a manufacturing firm regularly engaged in the production of tanks and secondary containment of this type used in liquid chemical storage applications. All tanks and secondary containment equipment shall be manufactured from virgin materials.

1.4 REFERENCE STANDARDS

A. A. American Society for Testing and Materials (ASTM):
1. D618 Conditioning Plastics and Electrical Insulating Materials for Testing
2. D638 Tensile Properties of Plastics
3. D790 Flexural Properties of Unreinforced and Reinforced Plastics and
4. Electrical Insulating Materials
5. D883 Definitions of Terms Relating to Plastics
6. D1505 Density of Plastics by the Density-Gradient Technique

7. D1525 Test Method for Vicat Softening Temperature of Plastics
8. D1693 Test Method for Environmental Stress-Cracking of Ethylene Plastics
9. D1998 Standard Specification for Polyethylene Upright Storage Tanks
10. D2765 Degree of Crosslinking in Crosslinked Ethylene Plastics as
11. Determined by Solvent Extraction
12. D2837 Method for Obtaining Hydrostatic Design Basis for Thermoplastic Pipe Materials
13. D3892 Practice for Packaging/Packing of Plastics
14. F412 Definitions of Terms Relating to Plastic Piping Systems

B. Association of Rotational Molders (ARM): Low Temperature Impact

C. Resistance (Falling Dart Test Procedure).

D. OSHA Standards: 2206; 1910.27 Fixed Ladders.

E. IBC CODE: International Building Code.

1.5 SUBMITTALS DURING CONSTRUCTION

A. Submittals shall be made in accordance with Section 013300, SUBMITTAL PROCEDURES in Division 01, GENERAL REQUIREMENTS.

B. For polyethylene tanks submit the following information:
1. The equipment manufacturer shall provide complete project specific drawings which include construction details, tank and fitting materials, clearance requirements, dimensions, and locations and details of nozzles and manways.
2. Submit complete installation instructions and operation and maintenance manuals.
3. A copy of the resin data sheet from the resin Manufacturer for the tank is to be supplied and the tank Manufacturer is to certify that it will be the resin used in the manufacture of the tank.
4. Wall thickness - Prior to the manufacture of the tank the designed wall thickness audit is to be supplied based upon 600 psi hoop stress (ASTM D 1998) @ 100 degrees F. Provide gel test results.
5. Submit catalog cuts and tank empty weights.
6. Supporting information on fittings and accessories to be supplied; heat system, insulation, mastic coating, etc
7. The manufacturer shall provide complete detailed dimensional drawings of the seismic restraint system for each polyethylene storage tank. Structural calculations certified by a Structural Engineer registered in the State of Montana shall be submitted showing that the tank has been designed to meet the requirements of the project, including the International Building Code earthquake design data and seismic requirements shown on the Drawings.
8. The manufacturer shall provide certification that each storage tank unit is suitable for storage of the specified chemicals.

C. For chemical containment equipment submit the following:
1. Catalog cuts showing materials and dimensions.
2. Evidence that the equipment is compatible with the stored chemical.

1.6 MANUFACTURER'S SERVICES

A. A manufacturer's technical representative for the equipment specified herein shall be present at the jobsite for the minimum person-days listed, travel time excluded. Provide the following services for each WWTP in a minimum of two trips:
   1. 1.0 person-days for installation assistance, inspection, and certification of the installation.

B. Startup services and assistance services shall be at such times as requested by the Contractor.

C. Submit a certification of proper installation and satisfactory performance as specified in Part 3 of these Specifications.

1.7 MANUFACTURER’S CERTIFICATE

A. Upon completion of the installation of the tanks, the manufacturer shall provide a manufacturer’s certificate certifying that the tanks have been designed and constructed for the service conditions defined in these Specifications and that they have been properly installed.

PART 2 - PRODUCTS

2.1 GENERAL

A. The use of a manufacturer's name and model or catalog number is for establishing the standard of quality and general configuration desired. Products of other manufacturers will be considered in accordance with the GENERAL CONDITIONS.

2.2 MANUFACTURERS

A. The tanks shall be as manufactured by:
   1. Snyder Industries
   2. Poly Processing
   3. Or Equal.

2.3 SERVICE CONDITIONS AND TANK DATA

A. Tanks shall be suitable for installation indoors, for exposure to continuous 98 percent relative humidity conditions, for operation in ambient air temperatures from 40 to 100 degrees F, and for exposure to the chemicals as listed hereinafter.

B. Aluminum Sulfate Solution Storage Tanks (1620-T-01, 2620-T-01):
   1. Material Stored: Liquid Aluminum Sulfate (Alum) 48 percent solution.
   2. Temperature: 55 to 85 degrees F.
   3. Specific Gravity: 1.34
   4. Corrosion pH Range: 3.5.
   5. Nominal Volume: 1,000 gallons (each) minimum.
   6. Nominal Diameter: 60 inches (maximum).
   7. Sidewall Height: 89.8 inches.

C. Glycerin-Based Carbon Source (1630-T-01, 2630-T-01):
   1. Material Stored: Micro C
   2. Temperature: 55 to 85 degrees F.
   3. Specific Gravity: 1.2
   4. Corrosion pH Range: 5-5.5
   5. Nominal Volume: 1,000 gallons minimum.

6. Nominal Diameter: 60 inches (maximum).
7. Sidewall Height: 89.8 inches.

D. Sodium Hydroxide Storage Tank (1610-T-01, 2610-T-01)):
1. Material Stored: Sodium Hydroxide (Caustic Soda) at 25 percent solution strength.
2. Temperature: 55 to 85 degrees F.
3. Specific Gravity: 1.53.
4. Corrosion pH Range: 14.
5. Nominal Volume: 1,000 gallons minimum.
6. Nominal Diameter: 60 inches (maximum).
7. Sidewall Height: 89.8 inches.

E. NPW & Reclaim Water Storage Tank (1920-T-01, 2920-T-01)
1. Material Stored: Treated primary effluent reclaim water
2. Temperature: 55 to 85 degrees F.
3. Specific Gravity: 1.0
4. Nominal Volume: 2,000 gallons minimum.
5. Nominal Diameter: 85 inches.
6. Sidewall Height: 101 ¾ inches.

2.4 TANK REQUIREMENTS

A. Each tank shall be constructed of opaque, high density, cross-linked polyethylene suitable for storage of the chemicals listed. Tank construction shall result in a one-piece molded, seamless tank. Tanks shall be cylindrical in cross section, vertical with flat bottoms, and provided with closed tops with the bottom and top integrally molded with the cylindrical wall. Wall thickness and resin shall be as recommended by the manufacturer for storage of the chemicals listed and in accordance with ASTM D1998 as specified hereinafter. Nozzles, flanges, sight gauges and other similar items constructed of HDPE, PVC, or CPVC or polypropylene shall use the appropriate material as required for the chemical stored.

B. All nozzles shall be PVC or CPVC or polypropylene fittings as specified or as shown on the Drawings for the piping connected to the tank, or integrally molded having ANSI/ASME B16.1 or B16.5 flanges, 125/150-pound drilling. PVC and CPVC or polypropylene fittings shall be compression type, long shank with deep cut threads with dual wide nut. Injection molded threads will not be permitted. Fittings penetrating the roof shall be installed vertically on the sloping surface. Nozzles and manways shall be of the sizes and orientations specified, or shown on the Drawings.

C. Manways shall be integrally molded and shall have a bolted and gasketed cover. All gaskets shall be compatible with the chemical in each tank.

D. Metal fasteners and hardware shall not be permitted where exposed to the interior of the tanks. All metal bolts, hardware, and accessories shall be Type 316 stainless steel.

E. Resin to be used in the tank manufacture shall be cross-linkable polyethylene PolyCL as manufactured by Poly Processing Company; Marlex TR-942 as manufactured by Chevron Phillips; Paxson 7004 as manufactured by ExxonMobil; or equal. The plastic shall not contain any fillers. The minimum wall thickness shall be sized and manufactured in accordance with ASTM D1998, Standard Specification for Polyethylene Upright Storage Tanks. Wall thickness calculations for all tanks shall be based on a minimum liquid chemical specific gravity of 1.65.

2.5 TANK ACCESSORIES

A. Manways: Top mounted manways shall be flanged, and have a minimum inside diameter of 18 inches. The manway shall have the same chemical resistance as the associated tank interior and shall be furnished with necessary gaskets and bolts all in general accordance with the details on the Drawings.

B. 1” Outlet Connection at bottom shall be compatible with 1” CPVC piping.
   1. Provide one flexible outlet connector per tank with a lay length not to exceed 8 inches.

C. 2” Fill Pipe Connection on top compatible with 2” CPVC piping.

D. 2” Vent Connection on top compatible with 2” CPVC piping.

2.6 SPILL CONTAINMENT

A. Provide two (2) secondary containment units at each WWTP.
   1. Units shall be for secondary containment of sodium hydroxide stored in intermediate bulk containers (IBCs) and provide a 300-gallon capacity.
   2. Unit shall include a bucket shelf to hold up to 5-gallon pail.
   3. No drain shall be provided.
   4. The spill containment pallet grating shall be removable for cleaning and have a uniformly distributed load capacity of 8,500 lbs.
   5. Provide UltraTech International Ultra-IBC Spill Pallet Plus Model, Eagle Model 1685, or equal.

2.7 SEISMIC RESTRAINT FOR PE TANKS

A. A completely independent tank restraint system shall be provided for each tank. The restraint system shall be capable of withstanding forces for the seismic design data shown on the Drawings, with no wind load. The restraint system shall have steel supports and stainless steel wire ropes.

B. The seismic restraint system shall be shop coated with primer prior to delivery to the construction site. The remaining required coatings shall be field applied as specified in Section 099600, HIGH PERFORMANCE COATINGS-WWTP. Coating of stainless steel components of the restraint system is not required.

2.8 ANCHOR BOLTS FOR PE TANKS

A. Anchor bolts shall be Type 316 stainless steel, not less than ¾-inch in diameter, provided with the seismic restraint system. See Section 055000, METAL FABRICATIONS-WWTP, for other anchor bolt requirements.

PART 3 - EXECUTION

3.1 DELIVERY, STORAGE, AND HANDLING

A. All tanks and other materials fabricated to this specification must be packaged, crated, or otherwise protected in a manner to prevent damage in handling and while in transit by the manufacturer. Details of these procedures shall be the responsibility of the manufacturer. Tanks shall be mounted on padded cradles if shipped horizontally or on a suitable skid if shipped vertically.

B. All flanged nozzles shall be protected by wooden blinds bolted to the flange and having a diameter of at least 2 inches greater than the outside diameter of the flange. All un-flanged components shall either contain rigid plugs inside the ends to prevent deflection or shall be protected by wooden boxes. Open ends of tanks shall be braced with suitable stiffening members to prevent deflection.

C. Tanks shall be loaded with at least three inches clearance between the tank (including fittings) and other tanks, and between the tank and the bulkheads or bed of the vehicle. No components or other pieces shall be shipped loose inside the tanks. Regardless of the mode of transportation, all shipped components must be firmly fastened and padded to prevent shifting of the load or flexing of components while in transit.

D. The manufacturer shall be responsible for the condition of the tanks and components delivered to the jobsite. Any damage suffered during transportation shall be repaired at the manufacturer’s cost.

E. The Contractor shall unload and store the tanks and accessories as recommended by the manufacturer. Any damage suffered during unloading, storage, or installation shall be repaired at the Contractor’s expense.

3.2 SEISMIC RESTRAINT SYSTEM INSTALLATION

A. The seismic restraint system shall be constructed and installed in accordance with the tank manufacturer's instructions. Care shall be taken to avoid conflicts with nozzles and appurtenances.

3.3 TANK INSTALLATION AND TESTING

A. Tanks shall be installed on a foundation in strict accordance with manufacturer’s printed recommendations and in the locations and orientations shown on the Drawings. After installation is complete, the tanks and all fittings and appurtenances shall be thoroughly cleaned to remove all debris and foreign materials. Upon completion of cleaning, the manway shall be bolted closed.

B. The tank shall be hydrostatically tested upon completion of installation and cleaning. The testing shall consist of filling the tank to overflow level with potable water with all outlets blocked or valved closed. The tank shall be left to stand for 48 hours. Any leaks at fittings observed during this period shall be repaired to the satisfaction of the Engineer. Leaks through the tank wall shall be cause for rejection.

3.4 MANUFACTURER'S CERTIFICATE(S)

A. Provide Manufacturer's certificate of proper installation
   1. Certificate shall include all results and testing data recorded during field testing.

END OF SECTION

SECTION 460754 - MEMBRANE BIOREACTOR PACKAGE PLANT SYSTEM – GENERAL – WWTP

PART 1 - GENERAL

1.1 GENERAL

A. This specification section and the following 460754 sections specify the package MBR system equipment and operating conditions. Kubota flat plate membrane systems were selected during design as the Basis of Design and these specifications describe the Kubota systems.

B. See the GENERAL CONDITIONS and Division 01, GENERAL REQUIREMENTS, which contain information and requirements that apply to the work specified herein and are mandatory for this project.

C. The construction solicitation for this project must meet clause 52.225-11, Buy American-Construction Materials under Trade Agreements (Nov 2023) and provision 52.225-12, Notice of Buy American Requirement-Construction Materials under Trade Agreements (May 2014).

1.2 DEFINITIONS

A. Membrane Manufacturer: The company responsible for manufacturing of Submerged Membrane Units (SMUs).

B. MBR System Manufacturer and Supplier (called the “MBR Supplier” from here on in this document): The company responsible for the manufacturing of the MBR SKID, Submerged Membrane Units (SMUs) to be used in this project, and for providing all equipment and services as described herein and for providing warranty support.

C. Contractor: The company responsible for construction and installation of the MBR System, including, but not limited to, site preparation, tank and basin construction, and mechanical and electrical installation.

D. Engineer: The Engineer is the prime professional with respect to the project.

E. Package MBR: A container-sized complete wastewater treatment plant designed to treat specific wastewater by utilizing SMUs and process equipment such as blowers, pumps and process instruments.

F. MBR SKID: A structure with process tanks and platforms to hold mixed liquor and process equipment and instruments respectively. MBR SKID also includes control panel(s) and wires to process equipment and instruments to run the system automatically.

G. MBR System: A collective term for all process and membrane zones that make a complete biological treatment system.

H. Process Train: A stand-alone combination of Process Zones designed and operated to achieve specific treatment objectives.

I. Process Zone: An area in a Process Train designed and operated to meet a specific biological treatment objective.

J. Membrane Zone: Any Membrane Tank or MBR containing membranes.

K. Membrane Tank: A tank or basin containing one or more large membrane sub-units that are operated as one unit. Membrane Tank typically has an HRT at Average Design Flow (ADF) of less than 1.0hr and is not considered as part of process Zone.

L. MBR: A tank or basin containing one or more large membrane sub-units that are operated as one unit. MBR typically has an HRT at Average Design Flow (ADF) of more than 1.0hr and is considered as part of process zone.

M. Membrane Bank: A grouping of large membrane subunits which share a common permeate header, a common air supply header, and that are taken off-line as an entity for any type of Clean-In-Place (CIP) procedure.

N. Submerged Membrane Unit (SMU): An assembly consisting of one or more SMU Subunits (“racks”, “cassettes”, etc.) and an integral diffuser assembly.

O. Membrane Element: The smallest assembled unit of a delivered system that is designed to be removed from a SMU and replaced as a complete unit. This may be flat sheets attached to a support structure and may be referred to as a “cartridge”, “module”, “cassette”, or other terms.

P. SMU Subunit: An assembly consisting of one or more Membrane Elements (“cartridge”, “module”, “cassette”, etc.). The Membrane Subunit is intended to be installed and replaced as a unit.

Q. Plant Hydraulic Loading Criteria: The net permeate flow rate over a given period of continuous operation accounting for CIP procedures and relaxation. Production capacity requirements are given in terms of:
   1. Average Annual Flow (AAF): The average flow occurring over a 24-h period based on total annual flowrate data.
   2. Maximum Monthly Flow (MMF): The maximum daily flow sustained for a period of 1 month in the record examined.
   3. Peak Week Flow (PWF): The maximum daily flow sustained over a seven-day period.
   4. Peak Week Flow (PWF): The maximum flow occurring over a 24-h period based on annual operating data.
   5. Peak Hourly Flow (PHF): The peak sustained hourly flowrate occurring during a 24-h period based on annual operating data.
   6. Peak Instantaneous Flow: The highest allowable flow rate under any conditions.

R. Flux: Gallons of permeate flow per day per square foot of membrane area (gfd). Additional definitions of flux that are used to characterize design criteria and membrane performance include:
   1. Instantaneous Flux: Calculated by dividing measured permeate flow rate by working membrane area at any instant.
   2. Gross Flux: See Instantaneous Flux.
   3. Net Flux: Calculated by dividing the total amount of permeate produced (available for discharge) in a given time frame by the working membrane area.

S. Maintenance Cleaning: Synonymous with chemically enhanced backwash and CIP. A Maintenance Cleaning is performed in-situ and in mixed liquor or activated sludge. The procedure is conducted by charging cleaning chemicals to membranes in the reverse direction of permeate flow with a soak time lasting more than 0.5hr. Typical Maintenance Cleaning characteristics are provided below.

T. Summary of Maintenance Cleaning Characteristics:

Parameter	Value (Condition)	Type
Membrane Soak Time	> 0.5hr	Primary
Conducted in Mixed Liquor	Yes	Primary
Conducted In-Situ	Yes	Secondary
Typical Duration	0.5hr – 4.0hr	Secondary
Fill Direction	Reverse	Secondary
Tank Fill/Drain	No	Secondary
Chemicals Required	Yes	Secondary

U. Recovery Cleaning: Synonymous with intensive cleaning. A Recovery Cleaning is performed in-situ or ex-situ and in water or dilute chemical. The procedure is conducted by charging cleaning chemicals to membranes in either direction with variable soak times. Recovery Cleaning is not needed for flat plate membranes. However, hollow fiber SMUs require this procedure.

V. Typical Recovery Cleaning Characteristics are provided below.

Parameter	Value (Condition)	Type
Membrane Soak Time	Optional	Primary
Conducted In Mixed Liquor	No	Primary
Conducted In-Situ	Optional	Secondary
Typical Duration	6.0hr – 24.0hr	Secondary
Fill Direction	Optional	Secondary
Tank Fill/Drain	Optional	Secondary
Chemicals Required	Yes	Secondary

W. Mechanical Cleaning: Synonymous with manual cleaning, physical cleaning and hand cleaning. Mechanical Cleaning is any instance where membranes are cleaned by hand or machine (water jetting or other) for the purposes of removing fouling or localized dewatering.

X. Localized Dewatering: Synonymous with clogging, sludging and plugging. Localized dewatering is the excessive accumulation of solids at a membrane surface in the form of refractory cake and generally in discrete, localized areas. Often caused by excessive filtration in combination with unequal or inadequate air scouring.

Y. Days: Defined as calendar days.

Z. In-Situ: Inside the normal service area and submerged in mixed liquor.

AA. MLSS: Mixed liquor suspended solids reported as mg/l.

BB. Permeability: Equals the net flux rate divided by the transmembrane pressure (TMP). The units of permeability are gfd/psi.

CC. Relaxation: A temporary suspension of membrane filtration with continued air scouring for the purpose maintaining treatment capacity or reducing CIP requirements.

DD. Transmembrane Pressure (TMP): The effective pressure differential across the membrane during normal operation.

1.3 WORK INCLUDED

A. This Section specifies the requirements for the furnishing, installing, testing, training, startup, and warranty support of all process skids and equipment required for a package membrane bioreactor (MBR) treatment system for the Hospital WWTP and the Hon-Dah WWTP.

B. The MBR Supplier shall design and build a complete MBR SKID with process tanks, SMUs, fine bubble diffusers, permeate and WAS pumps, process blowers, process chemical dosing skids and day tanks with secondary containment, membrane cleaning equipment, instruments, VFDs, and control panel(s) for each of the Hospital and Hon-Dah WWTPs.

C. The MBR Supplier shall be the Membrane Manufacturer and shall furnish and commission the MBR System as described in this specification, inclusive of all equipment, instrumentation, scope-specific piping systems, controls, integration, and warranty support.

D. The MBR Supplier shall provide the MBR Product Engineering and Design Services in support of the treatment system design as described in this specification. The MBR Supplier shall review the complete MBR system requirements as necessary to achieve the performance requirements specified herein with their specific equipment. If any changes to the equipment, instrumentation, piping, controls, wiring, tank size and/or layout as depicted in the drawings are required to meet the treatment or hydraulic requirements, the MBR supplier shall clearly define these items in the bid submittal and include all costs. These costs shall include a breakdown of the estimated engineering costs to complete the adjustments required to comply with their system requirements to provide a complete and operable MBR system. The cost breakdown must be adequately supported and will be verified. The MBR Supplier shall certify in writing that the system with changes noted meets their requirements necessary to achieve the performance requirements specified herein.

E. The Contractor shall furnish all labor, rigging, materials, and incidentals required for the installation of the MBR SKID in accordance with the installation instructions provided by the MBR Supplier. Once installed, the MBR Skid shall be complete and operational with all control equipment and accessories as specified herein and described in the Contract Documents.

F. The Contractor is responsible for transporting all package skids once the road cannot accept a commercial shipping truck. Contractor should be aware that the service roads to the final site locations may be steep and narrow. Special consideration should be placed into final transport of these skids.

G. The Engineer is responsible for coordinating the Work with the services of others involved in the project. The Engineer shall decide as to the quality and acceptability of services and materials furnished and Work performed. All questions which may arise as to the interpretation of any or all Plans and Specifications and all questions as to the acceptable fulfillment of the Contract on the part of the Contractor and MBR Supplier shall be resolved by the Engineer.

H. The MBR Supplier must clearly identify in detail any and all exceptions to the Services and Scope of Supply described in this Specification.

1.4 SUBMITTALS

A. Project Submittal: Submittals shall be made as required in Section 013300, SUBMITTAL PROCEDURES. The MBR Supplier which must also be the Membrane Manufacturer shall submit to the Engineer the complete descriptive information for all equipment, instrumentation, and components in the Supplier's Scope of Supply for the Engineer's approval prior to purchase of equipment. The MBR Supplier is to provide one (1) electronic PDF copy containing all submittal information organized and by component, clearly marking options, models, materials, etc. The Project Submittal shall contain the following:

1. MBR SKID structure analysis reports, layout drawings, piping drawings, electrical drawings, riser diagrams and control panel drawings.
2. MBR Supplier's literature for all equipment in the Scope of Supply will include (as applicable):
   a. Pump curves
   b. Blower curves
   c. Materials of construction
   d. Layout drawings showing all dimensions, sizes and locations of anchors.
   e. Minimum, maximum, and design duty points (flow rates and pressures/TDH)
   f. Unit performance and efficiency data
   g. Motor horsepower and voltage
   h. Complete wiring and control diagrams which show the point of connection for the power supply and control system.
   i. All project-specific installation data for use by the Contractor.
3. Where manufacturers' standard literature is submitted, it shall be clearly marked to indicate which features are to be furnished under this contract.
4. Process and Instrumentation Diagrams (P&IDs) showing all equipment and instrumentation which will be controlled by the MBR Supplier control system, including components provided by others. P&IDs will show components supplied by MBR Supplier. Unless otherwise directed by the Engineer, the MBR Supplier is responsible for establishing the tagging scheme for the P&IDs.
5. Tank list with tank liquid volume with SWD information
6. Instrumentation list and manufacturers' literature and cut sheets, clearly identifying manufacturer, models, ranges, materials of construction, installation details, power supply voltage, wiring information.
7. Valve list and manufacturers' literature and cut sheets, clearly identifying manufacturer, models, Cv range, materials of construction, pressure rating, and dimensions.
8. Valve actuator manufacturers' literature and cut sheets, clearly identifying models, motor horsepower and voltage, control wiring, installation/connection details, torque rating, actuation times, duty cycle, and materials of construction.
9. Control panel drawings, detailing the interior and exterior layouts, components, panel dimensions, and panel materials of construction and NEMA rating.
10. Control panel component manufacturers' literature, clearly denoting model numbers of all PLC components, relays, terminal blocks, power supplies, buttons, switches, fuse blocks, etc.

11. Control panel wiring schematics.
12. Warranty information, detailing membrane design fluxes for all seasonal flow conditions.
13. System start-up and test procedures.

B. Submittals prior to delivery of the package: The MBR Supplier shall submit to the Engineer the complete detailed information of the following items prior to delivery of the MBR skid:
1. System installation drawings, detailed system dimensions, materials, weights, locations of lifting lugs/points, and anchor bolt locations.
2. System mechanical layout drawings, detailing the number of membrane units, air and permeate piping distribution, piping supports, instrumentation and valves, and all other components comprising the MBR SKID. Drawings will detail information in plan and elevation/section views and include details as necessary to completely describe the installation requirements.

C. MBR Installation and Operations Manual (MBR IOM): The MBR Supplier shall furnish an Installation and Operations Manual 2 weeks prior to the delivery of the Supplier's equipment on site. The MBR IOM will include Supplier and manufacturer's manuals and drawings detailing dimensions, locations, wiring information, and other information necessary to convey the correct assembly and installation of the MBR System components provided by the MBR Supplier. In addition to installation documents, the MBR IOM shall include requirements for the Mechanical Inspection and a schedule of events for the System Commissioning. The MBR Supplier is to provide one (1) electronic PDF copy containing all information organized by component.

D. MBR Operations and Maintenance Manual (MBR O&M): The MBR Supplier shall furnish a MBR O&M Manual in accordance with Section 017823, OPERATION AND MAINTENANCE DATA. The supplier is to provide one (1) electronic PDF copy and two (2) USB flash disks containing the following information:
1. HMI (operator interface) User's manual, detailing screens and functions within the operator interface program.
2. Process variables and final control narrative
3. As-built P&IDs
4. As-built electrical schematics and control panel drawings
5. The MBR IOM shall become part of the MBR O&M.
6. Safety guidelines

1.5 QUALITY ASSURANCE

A. All the SKID, equipment and services specified under this Section shall be furnished by the MBR Supplier as the system supplier and shall be standard units of proven ability as a competent organization that is fully experienced, reputable and qualified in the manufacture of the equipment to be furnished. The MBR SKID shall be designed, constructed and installed in accordance with the best practice and methods of the MBR Supplier, and shall operate satisfactorily when installed.

B. To show evidence of being able to provide the quality of equipment and services described in this specification, the MBR Supplier shall submit their quality system ISO certification upon request. Certification shall remain in effect throughout the project startup.

C. All membranes furnished under this Section shall be new and unused and shall be the standard products of a MBR Supplier having a successful record of manufacturing the flat plate membranes specified herein for a minimum of fifteen (15) years.

D. The MBR Supplier shall have a minimum of 15-year history of manufacturing the flat plate membranes utilized for MBR applications.

E. The SMUs shall be manufactured in a factory owned, or partially owned, by the MBR system manufacturer (supplier) for single-source responsibility and increased reliability.

F. Qualifications: The MBR Supplier shall submit, as part of their proposal, the location, size, and start-up dates of five representative installations that meet the following criteria in order to be considered qualified:
   1. Utilize the same type of membrane unit proposed for this project.
   2. Have a plant or process train design capacity equal or similar to the listed MMF.
   3. Use MBR Supplier's aeration and CIP strategies as that of the proposed MBR Supplier.
   4. Have been in operation for at least five (5) years at the time of bid.
   5. Have operated within 25% of nominal rated capacity for a minimum of 12 months at time of bid.

G. The MBR Membrane Supplier shall have conducted research regarding virus removal for membranes in an MBR system 10 years old or older, clearly defining the MBR's ability to remove enterovirus, giardia, cryptosporidium and their related surrogates (male specific and somatic coliphages and clostridium perfringens) over the course of at least 3 months.

1.6 WORK BY OTHERS

A. The following work and Scope of Supply is specifically excluded from the MBR Supplier scope:
   1. Design and Engineering:
      a. Architectural
      b. Buried pipe, including soil requirements, thrust blocks, galvanic protection.
      c. Concrete pads: The concrete pad surface must be horizontal with a flatness of F_F=50 and levelness of F_L=35. MBR Supplier will be onsite to check the levelness and the flatness of the concrete pad surface before shipping out the MBR SKID. The contractor shall be responsible for the storage fee if MBR SKID cannot be shipped out on the day instructed by the contractor due to the failure to meet the tolerance.
      d. Additional tank penetrations
      e. Support of piping outside of MBR Supplier's scope
      f. Seismic design or calculations other than for seismic anchorage of MBR SKID.
      g. Sealing of calculations and drawings
   2. Structural:
      a. Building(s) for housing MBR SKID.
      b. Concrete pads.
      c. Concrete tanks.
      d. Anchor bolts for any equipment outside of MBR SKID.
   3. Mechanical:
      a. Permeate piping downstream of MBR SKID and tie points identified on drawings.

b. Plant water piping for CIP & diffuser flush clean, including branch connections.
c. Hoist equipment above the membrane tank for installation and removal of the membrane subunits.
d. Installation of any kind, including systems within or outside of Scope of Supply.
e. The following are not included in the standard package MBR scope.
    1. Coarse Screen and Grit Removal
    2. Equalization Tank and System (Pump, Agitator, Level Transmitters)
    3. Treated Water Tank
    4. Sludge Holding Tank
    5. Sludge Treatment Facility (Dewatering etc.)
    6. Measurement Instrument of Treated Water and Sludge
    7. Disinfection System
    8. Heat Trace

4. Electrical:
    a. Internet access shall be furnished by the Owner. The package MBR controls may require internet access.
    b. Electrical wiring interconnections (including wiring, conduit and other appurtenances required to provide power connections as needed) from the electrical power source to the MBR System Control Panel and between skids within a single train.
    c. Panel Boards, transformers, and other equipment necessary to provide power distribution to the MBR PLC.
    d. Grounding with an earth driven ground connection to the Panel Boards at the main ground lug in accordance with the National Electric Code (NEC).
    e. A dedicated grounding with an earth driven ground connection to MBR System Control Panel at the main ground lug in accordance with the National Electric Code (NEC). The grounding for MBR System Control Panel must be isolated from the grounding for the Panel Boards.
    f. Network communications connection between the MBR SCADA (provided by others) and the MBR System PLC (provided by the MBR Supplier).
    g. MBR alarm dialer system
    h. MBR alarm system via internet
    i. Lightening rod
    j. Lights for the MBR SKID
    k. Generator and ATS system
    l. Heat tracing system and insulations
    m. Surge Suppressor on AC mains
5. Construction Work:
    a. Excavation / earth work
    b. Field electrical work
    c. Field piping work
    d. Field installation work
    e. Field assembly work

6. Other:
   a. Receiving, unloading and safe storage of equipment at project site until ready for installation.
   b. Raw materials, chemicals and utilities during equipment testing. This includes potable water for system function testing and seed sludge per supplier requirements.
   c. Laboratory services, operating and maintenance personnel during equipment checkout, startup and operations.
   d. Preparing seed for seeding
   e. Heat tracing and the power supply for heat tracing
   f. Insulation
   g. Pressurized water for fine screen washer and plant utility water
   h. EPA Turbidity meter
   i. Chemicals for chemical cleaning
   j. HVAC system
   k. Equalization tanks/basins
   l. Reject ponds
   m. Pump stations
   n. Sludge holding tanks/basins
   o. Sludge digesting system
   p. Disinfecting system
   q. Chemical storage house/room
   r. Overhead crane system
   s. Bid bond or performance bond

1.7 WARRANTY

A. MBR Supplier shall warrant that the MBR SKID designed and fabricated by the MBR Supplier shall be free of defects in material and workmanship for a period of one (1) year from the date of delivery. Failure is defined as follows:
   1. Liquid leaks from process tanks
   2. Plastic deformation of structures, tank walls and platform floor during normal operation
   3. Plastic deformation of structures, tank walls and platform floor while MBR SKID is lifted per the instruction provided by MBR Supplier.

B. MBR Supplier shall warrant and replace the Submerged Membrane Unit under warranty for a period of 7 years. The warranty shall not be pro-rated.

C. All warrantee support, as defined in the warranty statement, shall be provided by the MBR Supplier directly or through certified sub-contractors.

D. MBR Supplier shall warrant Membrane Elements under the following terms:
   1. MBR Supplier shall replace any Membrane Elements that fail before 7 years from the date of successful completion of the System Commissioning.
   2. Failure is defined as any of the following:
      a. Inability to meet production capacity requirements as specified herein.
      b. Inability to meet TSS and turbidity requirements as specified herein.
   3. The following are specifically excluded from warranted membrane failure conditions:
      a. Exceeding TSS or Turbidity limits due to physical damage of the membranes and/or loss of piping integrity.

b. Loss of capacity due to failure to operate within design fluxes and permeability limits as defined in this Section.
c. Loss of capacity due to failure to perform required Maintenance.

E. MBR Supplier shall warrant all actuated valves with an expected number of duty actuations exceeding 2 full travel actuations/minute for a minimum period of 1 year beginning after completion of the System Commissioning as specified herein. The warranty shall not be prorated.

F. MBR Supplier shall warrant all other equipment, not specifically mentioned above, against defects in workmanship and materials for a period of 1 year. The warranty period shall begin following completion of the System Commissioning as specified herein.

G. MBR Supplier shall provide phone support for the MBR System for one year following successful completion of the System Commissioning.

PART 2 - PRODUCTS

2.1 GENERAL

A. “Basis-of-Design:” The first named Manufacturer’s system was used as the basis of design for this Specification and the Drawings. The structures, facilities, controls, and process specifications appurtenant to the entire MBR system shall meet the basis of design in quality and capacity. MBR Systems furnished by all qualified, interested Suppliers will be considered, provided the necessary structural, electrical, and mechanical changes required are submitted in conformance with the requirements of the GENERAL CONDITIONS and DIVISION 1, GENERAL REQUIREMENTS. The Contractor shall be responsible for all design changes associated with other Manufacturers’ equipment and shall bear all costs for necessary changes for a complete and satisfactory installation. Alternate systems must fit within the space shown on the Drawings.

B. The MBR systems design is based on MBR systems supplied by Kubota Membrane USA Corporation. The system for the Hospital WWTP differs from the system for the Hon-Dah WWTP to accommodate the different wastewater influent characteristics.

C. Nameplates with the name of the Manufacturer, equipment model number and all other pertinent data shall be affixed at a visible and accessible location on all equipment.

2.2 MBR PRODUCT ENGINEERING AND DESIGN SERVICES

A. The MBR Supplier will provide the following design services related to the MBR product under a separate design contract between the Owner and MBR Supplier:
1. Biological Process Design Verification – The MBR Supplier shall support the Engineer in providing analysis and verification of the biological process design, based on the customer’s influent mass loading, diurnal flow curves, peak flow/loading numbers, and permit limits. The Supplier shall verify basin volumes, recycle rates, aerations requirements, chemical dosing requirements, and waste solids projections. The supplier shall provide a written report summarizing the design results.

2. Equipment Sizing and Installation Details – The MBR Supplier shall verify duty points and turn-down, supply voltages, materials of construction, communications IO, equipment access and serviceability, area classifications, and pressure ratings for the MBR system's pumps, blowers, mixers, and valves. In addition to identifying manufacturers and specific part numbers for each component, CAD drawings shall be provided for integration into the Engineer's design package.
3. Instrumentation Design – The MBR Supplier shall provide the Engineer with complete specification and documentation of all MBR system instrumentation. Installation details shall be provided in STEP format for integration into the Engineer's design package.
4. Controls Design – The MBR Supplier shall supply MBR system Process and Instrumentation Diagrams utilizing the Supplier's standard symbols and tagging schemes.

B. Process Redundancy
1. The MBR System shall be able to treat the AAF and MMF for the duration of chemical cleaning (minimum of 4 consecutive hours) and the duration of maintenance inspection (minimum of 8 consecutive hours) with one Membrane Zone out of service.
2. Redundancy for all individual components of the MBR System shall be defined to mean that equipment on each MBR train is sized for the full range of conditions per train with the largest individual equipment unit out of service.
3. The treatment processes for both WWTPs shall be designed such that maximum month conditions can be met with one entire treatment train out of service.

C. Design Requirements
1. Hospital WWTP
a. Hospital Influent Flow characteristics:

Design Parameter	Year 7+
Annual Avg Day Flow, gpd	125,700
Maximum Month Flow, gpd	188,500
Maximum Day Flow, gpd	251,300
Peak Hour Flow, gpd	377,000

b. Hospital Influent Load Characteristics:

Design Parameter	Annual Average	Maximum Month	Maximum Day
TSS, lb/day	204	266	717
BOD_5, lb/day	210	272	668
TKN, lb/day	73	95	205
NH_3, lb/day	44	57	92
TP, lb/day	12	15	27
[1]Influent can be augmented with domestic sewage from a nearby sewer main.			

c. MBR System design parameters are listed in Hospital MBR System Design Parameters and they are intended to form a basis of producing the required effluent and meet regulatory requirements.

d. Hospital MBR System Design Parameters:

Design Parameter	Requirement	Units
Influent Characteristics		
Temperature Range	11-20	°C
Alkalinity		mg/L as $CaCO_3$
Membranes		
Number of Membrane Trains (N+1)	3	Minimum
Membrane Type	Ultra or Microfiltration	
Net Flux Rate (Max Month @ 11^0C)	10	gfd
Net Flux Rate (Peak Hour @ 11^0C)	20	gfd
Design Mixed Liquor Suspended Solids	6,000-12,000	mg/L
Treatment Process		
Number of Biological Process Trains (N+1)	3	Minimum
RAS/Mixed Liquor Recycle Rate	3-5 Q	at max month
Internal Mixed Liquor Recycle Rate	2-4 Q	at max month
Number of Process Pumps, Blowers, or Other Equipment (N+1)	2	Minimum
Standard Oxygen Transfer Efficiency (SOTE)	1.6-2.2	%/ft
Alpha Factor (α)	0.4-0.5	max
Beta Factor (β)	0.95	max
Air Flow Rate per train *Note actual site elevation	400-450	SCFM
Site Elevation	5,640	Ft

e. The MBR System will be designed to meet the effluent design criteria summarized in Hospital Effluent Design Criteria.

f. Hospital Effluent Design Criteria:

Design Parameter	Monthly Avg. Concentration	Maximum Day Concentration
TSS	5 mg/L	10 mg/L
BOD_5	5 mg/L	10 mg/L
NH_3-N	Non-detect	1.5 mg/L

NO_3-N	6 mg/L	8 mg/L
Total Nitrogen[1]	8 mg/L	10 mg/L
Total Phosphorus	1 mg/L	2 mg/L
Turbidity	0.2 NTU	0.5 NTU
[1]Based on WMAT Water Quality Standards and Arizona Class A+ Reclaimed Water.		

2. Hon-Dah WWTP
   a. For general information purposes, influent flow and loading design characteristics for the MBR System are listed in Hon-Dah Influent Flow Characteristics and Hon-Dah Influent Load Characteristics below. The Hon-Dah facility will be constructed in Phases. Provided here are Phase 1 and Phase 2 criteria. Phase 2 is not part of this contract but provision to expand to Phase 2 must be included in this design.
   b. Hon-Dah Influent flow Characteristics:

Design Parameter	Phase 1	Phase 2 [1]
Annual Avg Day Flow, gpd	52,900	104,100
Maximum Month Flow, gpd	79,300	156,200
Maximum Day Flow, gpd	105,700	208,200
Peak Hour Flow, gpd	158,600	312,300
[1]Not in contract; provisions to expand to Phase 2 in the future must be included in the design.		

   c. Hon-Dah Influent Load Characteristics

Design Parameter	Annual Average	Maximum Month	Maximum Day
Phase 1			
TSS, lb/day	86	112	302
BOD_5, lb/day	88	115	281
TKN, lb/day	15	20	43
NH_3, lb/day	9	11	18
TP, lb/day	3	3	6
Phase 2			
TSS, lb/day	169	220	594
BOD5, lb/day	174	226	553
TKN, lb/day	30	40	85
NH3, lb/day	17	23	36
TP, lb/day	5	7	12
[1]Influent can be augmented during Year 1 with domestic sewage from a nearby sewer main.			

d. The WWTP will be constructed in two phases. Phase 1 will meet the Year 2-6 conditions and Phase 2 will meet the Year 7+ conditions. Provisions for easily upgrading from Phase 1 to Phase 2 shall be provided. MBR System design parameters are listed in Hon-Dah MBR System Design Parameters and they are intended to form a basis of producing the required effluent and meet regulatory requirements.

e. Hon-Dah MBR System Design Parameters:

Design Parameter	Requirement	Units
Influent Characteristics		
Temperature Range	11-20	°C
Alkalinity		mg/L as $CaCO_3$
Membranes		
Number of Membrane Trains (N+1)	2 (Phase 1) 2 (Phase 2)	Minimum
Membrane Type	Ultra or Microfiltration	
Net Flux Rate (Max Month @ 11^0C)	10	gfd
Net Flux Rate (Peak Hour @ 11^0C)	20	gfd
Design Mixed Liquor Suspended Solids	6,000-12,000	mg/L
Treatment Process		
Number of Biological Process Trains (N+1)	2 (Phase 1) 3 (Phase 2)	Minimum
RAS/Mixed Liquor Recycle Rate	3-5 Q	at max month
Internal Mixed Liquor Recycle Rate	2-4 Q	at max month
Number of Process Pumps, Blowers, or Other Equipment (N+1)	2 (Phase 1) 3 (Phase 2)	Minimum
Standard Oxygen Transfer Efficiency (SOTE)	1.6-2.2	%/ft
Alpha Factor (α)	0.4-0.5	max
Beta Factor (β)	0.95	max
Air Flow Rate per train *Note actual site elevation	275-325	SCFM
Site Elevation	7,170	ft

f. The MBR System will be designed to meet the effluent design criteria summarized in Hon-Dah Effluent Design Criteria.

g. Hon-Dah Effluent Design Criteria:

Design Parameter	Monthly Avg. Concentration	Maximum Day Concentration
TSS	5 mg/L	10 mg/L
BOD_5	5 mg/L	10 mg/L
NH_3-N	Non-detect	1.5 mg/L
NO_3-N	6 mg/L	8 mg/L
Total Nitrogen[1]	8 mg/L	10 mg/L
Total Phosphorus	1 mg/L	2 mg/L
Turbidity	0.2 NTU	0.5 NTU
[1]Based on WMAT Water Quality Standards and Arizona Class A Reclaimed Water.		

3. The MBR System Supplier's Scope of Work for this project shall include the following components, including redundant equipment as specified above. MBR System Suppliers shall refer to the Required Equipment List in the Exhibits for the general type and specified manufacturer of process equipment associated with the MBR System. In preparation of the proposal, MBR System Suppliers are encouraged to provide as much information on specific equipment as possible to facilitate a full and complete evaluation of the scope of supply. Obtaining a clear understanding of the MBR System Supplier's information and scope will be critical to the evaluated bid process. As necessary, additional information requests will be made. See Appendix A for available building space. The Hospital Utility Campus WWTP will have a building space of approximately 65 feet by 120 feet to house all tanks and liquid stream equipment in the MBR System Supplier's scope plus the UV disinfection facility, non-potable water pump station, and effluent pump station. Chemical feed equipment, blowers, and compressors will be located in separate rooms. The Hon-Dah Utility Campus WWTP will have a building space of approximately 60 feet by 96 feet to house the same components with chemical feed equipment, blowers, and compressors in separate rooms

D. System Configuration
1. The Whiteriver WWTP MBR System project will consist of two independent WWTPs.
   a. Hospital WWTP will consist of three (3) MBR trains, each train containing two MBR Skids.
   b. Hon-Dah WWTP will consist of two (2) MBR trains, each train consisting of one MBR Skid.
2. The Hospital MBR SKID shall consist of the following major process component:
   a. Three (3) Pre-Anoxic (Pre-AX) Tanks: Minimum volume of 7,400 gallons per tank. At Pre-AX tank, mixers are installed and de-nitrification process as well as alkalinity recovery process will occur.
   b. Three (3) Pre-Aeration (PA) Tanks: Minimum volume of 28,000 gallons per tank. PA tank has fine bubble diffuser system to supply oxygen to biology and to intermittently agitate the tank. The air is delivered by PA blower(s) installed at Control panel platform.

c. Three (3) Post-Anoxic (Post-AX) Tanks: Minimum volume of 3,500 gallons per tank. At Post-AX tank, mixers are installed and de-nitrification process as well as alkalinity recovery process will occur.
d. Three (3) MBR tanks: Minimum volume of 14,800 gallons per tank. Minimum total system MBR volume will be 44,400 gallons. At MBR tank, SMU(s) are installed. MBR blower will supply the air for scouring membrane surface as well as supplying oxygen for biological treatment.
e. Control panel platform: Control panel platform consists of two floors (upper and lower) to fasten MBR System Control Panel and other required ancillaries such as permeate pump(s), MBR blower(s), PA blower(s), WAS pump(s), chemical injection system, day tank with secondary containment, and instruments.
f. The Hospital MBR SKIDs shall consist of the following process tanks as shown in specification table below. The Hospital WWTP will require 3 trains. Each train will include two skids. The overall footprint and height is limited to the values shown in Table 3. The dimensions are set for an economical transportation in US with using a general truck service. However, the components that are loose shipped to the project site such as ladders, piping sticking out over the tank top are NOT taken account into the overall footprint or height.
g. Specification of Hospital MBR SKIDs, per train (3 trains needed):

Zone	Size
Pre-Anoxic Liquid Volume, per train	7,400 Gallons
Pre-Aeration Liquid Volume, per train	28,000 Gallons
Post-Anoxic Liquid Volume, per train	3,500 Gallons
MBR Liquid Volume, per train	14,800 Gallons
Overall Footprint of Skids	a) 30’ x 12’ b) 50’ x 12’
Overall height of Skids	12’

3. The Hon-Dah MBR SKID shall consist of the following major process component:
   a. Two (2) Anoxic (AX) tanks: Minimum volume of 4,500 gallons per tank. At Pre-AX tank, mixers are installed and de-nitrification process as well as alkalinity recovery process will occur.
   b. Two (2) Pre-Aeration (PA) Tanks: Minimum volume of 6,300 gallons. PA tank has fine bubble diffuser system to supply oxygen to biology and to intermittently agitate the tank. The air is delivered by PA blower(s) installed at Control panel platform.

c. Two (2) MBR tanks: Minimum volume of 14,800 gallons per tank. Minimum total system MBR volume will be 29,600 gallons. At MBR tank, SMU(s) are installed. MBR blower will supply the air for scouring membrane surface as well as supplying oxygen for biological treatment.
d. The Hon-Dah MBR SKIDs shall consist of the following process tanks as shown in specification table below. The Hon-Dah WWTP will require 2 trains. Each train will include one skid. The overall footprint and height is limited to the values shown in Table 4. The dimensions are set for an economical transportation in US with using a general truck service. However, the components that are loose shipped to the project site such as ladders, piping sticking out over the tank top are NOT taken account into the overall footprint or height.
e. Specification of Hon-Dah MBR SKIDs, per train (2 trains needed):

Zone	Size
Anoxic Liquid Volume, per train	4,500 Gallons
Pre-Aeration Liquid Volume, per train	6,300 Gallons
MBR Liquid Volume, per train	14,800 Gallons
Overall Footprint of Skid	38’ x 12’
Overall height of Skid	12’

E. The allowable MLSS concentration in the MBR Tanks shall range between 8,000 mg/l and 15,000 mg/l.

F. The MBR basins shall be considered part of the biological process when calculating aerobic volume requirements.

G. Membrane CIP Procedures
1. Membrane subunits shall be cleaned in place in order to maintain production capacity and meet performance requirements specified herein. The allowable frequency of listed CIP methods shall be as follows:
a. Maintenance Clean frequency shall not exceed 6 times/yr.
b. Recovery Clean frequency shall not exceed 2 times/yr.

H. For MBR Systems that require Recovery Cleaning as part of routine maintenance:
1. Proper coating shall be provided for Membrane Zones by the MBR Supplier to protect against corrosion or deterioration of wall materials.
2. All fasteners, including nuts, bolts, screws, cables, washers and other appurtenances, associated with the SMU shall be manufactured from Type 316L stainless steel.

I. The MBR shall be designed to operate at or below a trans-membrane pressure (TMP) of 3 psig.

J. Membrane Integrity Testing
   1. Turbidity monitoring shall be sufficient to detect a breach in a single membrane element or element connection.

K. Site Conditions
   1. Influent wastewater shall contain less than 15% of the influent BOD_5 as fats, oils and grease (FOG).
   2. No substances shall be placed in the system in quantities which are not biodegradable or toxic to the biological system.
   3. The influent wastewater pH shall be between 6-8 SU.
   4. Water hardness shall not exceed 300 mg/l as CaCO3.

2.3 MBR SYSTEM CONTROL PANEL

A. General:
   1. The MBR Supplier shall furnish MBR System Control Panel that fits to the space at the first floor of the Control panel platform without conflicting to the other ancillary equipment.
   2. The MBR Supplier shall submit Electrical drawings and panel drawing of MBR System Control Panel to get approval from the Engineer. After approval, the MBR Supplier can start manufacturing it.
   3. The size of the panel shall be determined by the MBR Supplier.
   4. MBR System Control Panel shall be pre-mounted, pre-wired and pre-tested before ship-out so that there will be no need for field wiring or field testing before starting MBR SKID, except as needed when there is more than one skid in a single train. However, there may be loose-ship equipment and instruments will be wired on site such as the fine screens and the level transmitter. They shall be installed and tested at the MBR Supplier shop and disassembled for loose shipment
   5. All VFDs connected the MBR PLC are done by Ethernet cables. Remote I/O panels are used as needed.
   6. NEMA 3R local disconnect switches (if the MBR SKID is installed indoors), or NEMA 4X local disconnect switches (if the MBR SKID is installed outdoors) for all the motors on the MBR SKID.

B. NEMA 4/12 enclosure PLC/MCP Control Panel Features:
   1. NEMA 4/12 powder coated steel enclosure estimated size (Hammond, Saginaw or equal) with 2 doors. The size of the panel and qty of the panel shall be determined by the MBR Supplier so that the MBR System Control Panel will physically fit at the first floor of the Control panel platform without conflicting to the other ancillary equipment.
   2. NEMA 4/12 air conditioner. Heat calculation shall be submitted.
   3. Phoenix Contact MGUARD or HMS Ewon Flexy 205 remote access VPN firewall or Rockwell equivalent remote access VPN firewall
   4. Allen Bradley 1769-L33ER processor
   5. 24 VDC power supply for field devices
   6. Ethernet switches
   7. Relays, Circuit breakers
   8. All I/O points wired to interface terminal strips.
   9. Terminal blocks and I/O as appropriate per NEC for all I/O points
   10. LED Panel Light

11. Convenience power outlet
12. Door handle
13. UPS system allowing operation of PLC, HMI, I/O cards and 24VDC instruments for 3 minutes in cases of power losses.
14. Fabricated and listed per UL 508a requirements
15. Complete, documented control panel functionality test, including point-to-point testing of all I/O channels.
16. Detailed panel drawings and loop interconnects
17. Submittals as required by RFQ
18. Allen Bradley Powerflex 525 VFDs (Invertek IP66 VFDs also acceptable)
19. Emergency Stop button on the front of the panel
20. SS sunshade cover to protect HMI display when not located indoors.
21. Fuses
22. Transformer(s)

C. PLC IO Counts and IO cards:
1. To be determined by the MBR Supplier. The MBR Supplier shall refer P&ID provided by KMU.
2. Provide 20% spare I/O for each I/O type.

D. Control System Hardware and Software Features:
1. 19” Allen Bradley Panelview Plus 7 Industrial Touchscreen Operator Interface
2. Rockwell Software Factory Talk View ME Station

E. PLC and HMI Programming:
1. PLC Programming following Control Narratives and using PLC Programming Standards.
2. HMI Programming following Control Narratives using HMI Programming Standards
3. PLC/HMI programming FAT at the MBR Supplier shop or Remotely witnessed

F. Engineering:
1. Control panel design, drawings, and wiring schematics.
2. Loop wiring (point-to-point) drawings.
3. Submittal documents
4. 100% design documentation
5. As-delivered documentation
6. As-built documentation

G. Remote Access Device
1. Assuming Internet access is available at the site, we will provide the following equipment to permit remote access for troubleshooting and programming as necessary:
2. VNC remote access software or equivalent
3. HMS Ewon Flexy 205 remote access VPN firewall or equivalent

2.4 SKID COMPONENTS

A. The skid shall be supplied per Section 460754.01, DETAILED EQUIPMENT SPEC (DES): SKID COMPONENTS-WWTP.

2.5 SUBMERSIBLE MIXERS

A. Submersible mixers shall be supplied per Section 460754.02, DES: SUBMERSIBLE MIXERS-WWTP.

2.6 FINE BUBBLE DIFFUSERS

A. Fine bubble diffusers systems shall be supplied per Section 460754.03 DES: FLEXIBLE MEMBRANE DIFFUSERS-WWTP.

2.7 PUMPS

A. Internal Recycle Pumps shall be per Section 460754.04, DES: SUBMERSIBLE PUMPS-WWTP.

B. Permeate and feed forward pumps shall be per Section 460754.05, DES: CENTRIFUGAL PUMPS.-WWTP

2.8 BLOWERS

A. Blowers shall be per Section 460754.06, DES: Regenerative Blowers.

2.9 PROCESS INSTRUMENTATION

A. Process instrumentation devices shall be as specified in Section 460754.07, DES: PROCESS INSTRUMENTATION-WWTP.

2.10 CHEMICAL FEED SKIDS

A. Chemical feed skids and pumps shall be as specified in Section 460754.10, DES: CHEMICAL FEED SKIDS-WWTP.

2.11 SUBMERGED MEMBRANE UNIT (SMU)

A. The MBR Vendor shall provide new SMUs for installation in the MBR basins (2 SMUs per MBR basin). SMUs shall be type SP337 as manufactured by Kubota Membrane USA Corporation, or approved equal.

B. The SMUs and supporting pipe work shall be designed for a cross-flow configuration by which the SMU will remove a portion of the water as the recycle flow circulates through the MBR basin.

C. Each SMU shall be:
   1. Fabricated and factory certified before shipment to the site.
   2. Provided complete, with all necessary components, accessories, connection points, and appurtenances required to make a complete and operable system.
   3. Made to withstand corrosion due to the use of common WWTP chemicals (e.g. sodium hypochlorite, hydrochloric acid, oxalic acid, citric acid, methanol, alum, rare earth chemicals, sodium hydroxide, etc.). All necessary supports for the membrane racks and in-basin liquid and air piping shall be provided as a part of the system and shall meet or exceed all requirements listed in Section 40 05 07 – Hangers and Supports for Process Piping.
   4. Furnished with properly supported and anchored components for all factory installed pipes and valves.
   5. Provided with guide and stabilizer pipes.

D. Membrane blocks shall:
   1. Be plate membranes as manufactured by Kubota, or approved equal, and be SP type configuration.
   2. Be manufactured using materials suitable for use in submerged MBR applications.
   3. Have an average pore size of 0.2 microns (maximum pore size of 0.4 microns).
   4. Be physically strong enough to withstand the operating conditions associated with continuous operation in an aerated basin of mixed liquor at concentrations of up to the value specified by the MBR Vendor in its O&M Manual.
   5. The membranes shall be approved by the California Department of Health Services (DHS) under the California Recycled Water Criteria (Title 22 of the California Code of Regulations). Submitters shall provide a copy of the DHS acceptance letter and test report.

2.12 HAZARDOUS AREAS

A. Unless otherwise specified in the Contract Documents or Drawings, none of the MBR equipment or instrumentation are required to meet the requirements for hazardous area installations (Class 1, Division 1 or Division 2).

2.13 SPARE PARTS AND SPECIAL TOOLS

A. The MBR Supplier shall provide recommended spare parts for all equipment and instrumentation within the package MBRs.

B. MBR Supplier shall furnish one (1) set of lifting tools designed for lifting SMU safely for maintenance of SMU.

C. No other spare parts will be provided unless specified in other sections.

PART 3 - EXECUTION

3.1 PROJECT EXECUTION

A. Unless otherwise required in the Contract Documents, the MBR Supplier shall provide all submittal documentation as described in this Section no later than 12 weeks after execution of Purchase Order by both parties.

B. Unless otherwise required in the Contract Documents, the MBR Supplier shall deliver all components in their Scope of Supply, as described in this Section, no later than 50 weeks after receipt of written Submittal Approval by the Engineer and Contractor

3.2 CONTROL SYSTEM FACTORY ACCEPTANCE TEST

A. The MBR Supplier shall coordinate and conduct a factory acceptance test (FAT) of the MBR control system during which:
   1. The PLC control logic and HMI operability shall be demonstrated by systematically forcing I/O to verify all controls functions and HMI screen representations defined in the system control narrative.
   2. The MBR control panel shall be inspected for completeness, and workmanship.

B. The MBR Supplier shall provide a minimum of 2 weeks' notice to the Owner and Engineer prior to the FAT. The Owner and Engineer may, choose to attend and witness the FAT at their own expense.

C. Whether or not the Owner and/or Engineer attend the FAT, the MBR Supplier shall provide written documentation and certification of the completed FAT.

3.3 MATERIALS INSPECTION

A. The Contractor shall inspect delivered equipment upon arrival on site for completeness of scope delivery and to verify that all components have arrived undamaged. The Contractor is responsible for notifying the MBR Supplier of deficiencies in quantities or conditions within 28 days from the ship date.

B. The Contractor shall provide all labor, materials, and equipment for unloading, de-crating, organizing, and compiling take-off of received MBR equipment, components, and instrumentation.

C. The MBR Supplier shall make available, upon the request of the Contractor, personnel to assist in the inspection of the MBR Supplier's equipment upon unload at the site. MBR Supplier's personnel shall provide services in accordance with their standard daily rates.

3.4 MECHANICAL INSPECTION PRIOR TO COMMISSIONING

A. The Contractor shall schedule with the MBR Supplier to perform a Mechanical Inspection at least 2 weeks prior to the scheduled Commissioning of the System.

B. The Contractor shall complete tank construction, all the piping including leak test and electrical wiring and termination prior to the Mechanical Inspection.

C. The MBR Suppler shall conduct a Mechanical Inspection of the MBR System to verify that the installation is complete and ready to begin Commissioning activities. The MBR Supplier shall verify the following:
   1. Installation of all equipment per the Engineer's and MBR Supplier's drawings and MBR IOM information.
   2. Installation of all instrumentation per the Engineer's drawings and MBR IOM information.
   3. Completeness of all piping installations.
   4. Completeness of all electrical installations.
   5. Completeness of all basins, including removal of all debris that may cause damage to the MBR SMU membranes.
   6. Review of all pipe integrity testing results.

D. Upon completion of the Mechanical Inspection, the MBR Supplier shall provide written documentation of the inspection results.

E. Follow up to Mechanical Inspection
   1. If the MBR System is complete per the requirements of the Mechanical inspection, the MBR Supplier shall schedule the System Commissioning with the Contractor. The date for the System Commissioning is to be established within 2 weeks of the successful completion of the Mechanical Inspection.
   2. If the MBR System is not complete at the time of the Mechanical Inspection, the MBR Supplier shall document system deficiencies to the Contractor, Engineer, and Owner. The Contractor will then complete all necessary work and provide documentation (including digital photographs) of the completed work.
      a. Electrical and Control System Documentation Requirements

1. Wire ring-out documentation signed by electrician
2. Pictures of completed terminations (if terminations in contractor scope) in field and PLC panel including wire labeling.
3. Documentation of completed network cabling, Ethernet cable termination and fiber optic termination and patching.
4. Documentation of all motor and valve terminations, motor cable Insulation resistance testing
5. After all noted deficiencies are resolved to the satisfaction of the Engineer, Owner, and MBR Supplier, the date for the System Commissioning is to be established within 2 weeks.

3. If the Mechanical Inspection deficiencies are deemed as sufficiently important by the MBR Supplier, Owner, or Engineer, the Contractor shall arrange for the Mechanical Inspection to be repeated at the Contractor's expense.
4. If electrical and control system wiring is incomplete prior to system commissioning scheduling, Contractor must complete all necessary work and provide documentation of the completed work (as described in 3.04 D. 2. above). The Contractor must update the Engineer, Owner, and MBR Supplier of the progress so that a revised system commissioning date can be organized as soon as possible. In this scenario, penalties for project delay will become the responsibility of the Contractor.

3.5 SYSTEM COMMISSIONING

A. The MBR Supplier shall coordinate with the Contractor, Engineer, and Owner for execution of the System Commissioning. In advance of System Commissioning the MBR Supplier shall perform an onsite Mechanical Inspection of the facility and generate a punch-list of inconsistencies. The Contractor is required to resolve the punch-list items to the satisfaction of the MBR Supplier, prior to scheduling System Commissioning.

B. Prior to System Commissioning, the Contractor shall coordinate with the PICS contractor and the MBR Supplier to test communications and functionality between the MBR control system and the MBR Control System.

C. The System Commissioning will consist of the following:
1. General inspection of systems (lubrication, rotation, calibration)
2. Loop checking, instrumentation, and control system verification
3. Clean Water diffuser testing
4. Clean water system testing: test run the system with all equipment/instrument except Membrane Subunits in auto mode by recirculating in clean water.
5. Sludge re-seeding
6. Training

D. The Contractor shall provide materials and personnel in support of the System Commissioning to fill basins with clean water, transfer fluids, repair/remedy any and all electrical and mechanical issues, provide temporary tie-ins, temporary piping, transfer pumps, etc.

E. The Contractor shall coordinate with the Engineer and Owner to seed the MBR system with sludge at the conclusion of the clean water testing. The MBR Supplier is not responsible for supplying the seed sludge.

F. The System Commissioning shall begin at the Contractor's discretion, within the limits defined herein:
   1. Successful completion of a pre-commissioning Mechanical Inspection is required.
   2. Start of Commissioning shall be no later than 60 days after completion of Mechanical Inspection.

G. The Owner shall operate the MBR during the Commissioning Period; however, MBR Supplier and Contractor shall be allowed to provide onsite assistance.

H. MBR Supplier is responsible for monitoring operating conditions and performance during the Commissioning Period.

I. MBR Supplier shall provide the Owner with a MBR O&M Manual after the end of the Commissioning Period. The manual shall include at a minimum:
   1. As-built drawings
   2. Safety Manual
   3. HMI User's Manual
   4. As-built control schematics
   5. Process variables and control narrative.

J. MBR Supplier shall submit the MBR O&M Manual within 4 weeks after the end of the Commissioning Period.

K. Membrane permeate quality shall be evaluated to determine compliance of the MBR System with Performance Requirements. If the MBR system fails to comply with requirements of membrane permeate quality, MBR Supplier shall provide the Owner and the Engineer a written plan of modifications to the system (such as repairing damaged membranes, replacing seals, complete replacement of system) to achieve compliance with the requirements. Upon implementation of modifications plan, the permeate quality tests shall re-commence in their entirety.

3.6 STRESS TESTING

A. A Stress Test shall be conducted following the System Commissioning to demonstrate the ability of the MBR System to meet specification requirements regarding Maximum Month Flow and Peak Daily Flow as described in Section 2.2.

B. The MBR Supplier shall be responsible for performing the test and shall coordinate as necessary with plant staff.

C. A certified representative of the MBR Supplier shall be onsite for the duration of testing unless otherwise agreed to in writing.

D. Testing shall not commence until the MBR System is operational and the biological process fully stabilized as indicated by the following:
   1. Mixed liquor suspended solids concentrations in the reactor shall be greater than 8,000 mg/L but less than 15,000 mg/L.
   2. No excessive foaming indicative of upset conditions.
   3. Filterability in excess of 10 mL in 5 minutes.

E. One of two (2) reactors shall be selected to undergo testing per Testing Conditions. Conditions shall simulate rated MMF and PDF per Section 2.2 for the plant. During testing:
   1. Membrane cleaning, as required, shall be performed in accordance with MBR Supplier recommendations and may occur during any phase of testing.

2. During testing instantaneous flux, trans-membrane pressure, permeability, temperature and airflow shall be recorded at one minute intervals.

F. Testing Conditions:

Testing	Duration (hr)	# MBR	# SMU
Membrane Cleaning	2	1	1
MMF	8	1	1
PDF	4	1	1
Membrane Cleaning	2	1	1

1. The net (average) output during testing must be within 10% of target MMF and PDF to be considered successful.
2. Failure to pass the Stress Test shall result in an evaluation and retest of the system. A second failure shall require a remedy at the expense of the MBR Supplier up to and including the installation of additional membrane equipment at no additional cost to the Owner.

3.7 TRAINING

A. The MBR Supplier shall provide Training in the maintenance and operation of all systems included in the MBR Supplier's control system.

B. Training shall be completed prior to the completion of the System Commissioning. All training shall be performed by the MBR Supplier or a factory-certified representative of the MBR Supplier or component supplier. Training is to include:
1. Navigation of all HMI screens and menus.
2. Review of automatic operations and controls.
3. Changing process set points
4. Overriding controls from the HMI
5. Manual operation of the system in the event of a power failure
6. Maintenance cleaning
7. Trouble shooting.

3.8 PROJECT SCHEDULE

A. The MBR Supplier shall provide the Scope of Supply and associated services specified in this specification in accordance with the Estimated Project Schedule.

B. Firm dates for Deliverables as listed in Estimated Project Schedule will be established by Engineer, Contractor, and Customer upon initiation of the project.

C. Estimated Project Schedule:

Deliverable	Estimated Due Date
Submittal Documentation	Twelve (12) weeks after execution of Purchase Order and T&C agreement by both parties
Installation Documentation (MBR IOM)	Two (2) weeks prior to Equipment Delivery at Site
Equipment Delivery at Site	Fifty (50) weeks after receipt of Submittal Approval by Engineer and Contractor
Mechanical Inspection	Two (2) weeks prior to System Commissioning

System Commissioning	To be scheduled within sixty (60) days of successful completion of Mechanical Inspection
Training	Training to be provided at the conclusion of the System Commissioning
MBR Operations and Maintenance Manual (MBR O&M)	Four (4) weeks after completion of System Commissioning

3.9 MBR SUPPLIER SERVICES

A. In addition to the time necessary to complete the requirements established within this specification and elsewhere within the Contract Documents, the MBR Supplier shall provide forty-two (42) person-days and eleven (11) on-site visits (extra person-days and trips if additional technical support is needed) in support of the Services shown in MBR Project Execution Services.

B. MBR Project Execution Services:

Item	Service	Estimated Person-Days	Estimated Trips	Notes
1	Kickoff Meeting	2	1	Meetings to be at Engineer's facility
2	Material Inspection During Delivery	4	2	MBR Supplier to verify completed shipment of material at unload
3	Mechanical Inspection	4	2	MBR Supplier to verify Correct Installation
4	Commissioning	30	4	Inclusive of clean water testing and seeding support/startup
5	Training	2	2	Training during Commissioning

C. Time spent remedying equipment deficiencies/problems shall not count toward the listed durations and trips.

D. MBR Supplier shall be given a minimum of two-week advance notice prior to the scheduling of any of the listed Services.

E. All service shall be provided by a factory representative or certified subcontractor.

F. MBR Supplier shall provide phone support for a minimum period of 1 year following commissioning during normal working hours.

G. MBR Supplier shall provide a phone number for support during an event of an emergency.

END OF SECTION

SECTION 460754.01 – DES: SKID COMPONENTS – WWTP

PART 1 - GENERAL

1.1 WORK INCLUDED

A. The MBR supplier shall furnish the stainless steel tanks, also referred to as skids, in accordance with this section and Section 460754, PACKAGE MBR SYSTEM – GENERAL-WWTP.

1.2 SUBMITTALS

A. Submit shop drawings, manufacturer literature, diffuser layout drawings, and O&M Manuals as required in Section 013300, SUBMITTAL PROCEDURES, and Section 430754, PACKAGE MBR SYSTEM – GENERAL-WWTP, including parts lists and recommended spare parts.

PART 2 - MATERIALS

2.1 MBR SKIDS

A. MBR SKID materials
   1. MBR SKID material shall be constructed of 304 stainless Steel.
   2. Plates, Angles, and Channel Shapes:
      a. Stainless steel plates, angles and shapes shall conform to the requirements of AISI 304 with a minimum yield strength of 30,000 psi or equal.
      b. Aluminum plates, angles and shapes shall be 6061 alloy with a T6 temper or equal.
   3. Stainless Steel Pipe: Stainless steel pipe shall conform to the requirements of ISO-1127.
   4. Unistrut: Unistrut structural members shall be P1000, 1 5/8”, stainless steel.

B. Fabrication
   1. Stainless steel welds will be seal welds or stitched.
   2. Tank construction shall conform to applicable sections of AISC, 13th Edition of the Steel Construction Manual; or with the European standard EN 1993, including EN 1993 1-4 for stainless steel structures, as well as EN 1090-2 for the execution, fabrication, and control of steel structures.

C. MBR SKID structure design
   1. MBR SKID shall be designed to support all hydrostatic, equipment, live, and seismic loads as indicated on the drawings and in this specification.
   2. The bottom structure of the MBR SKID that are supported by the flat concrete pad with 1/4” deviations in surface flatness shall be a 1/8” or 10 ga thick flat plate or structure tubes with 6” height or less in order to maximize the liquid volume in process tank(s) within the limited foot print.
   3. Loading for structure and tank walls:
      a. Live load(L): loading with static water in the tanks at flood level listed in Table 2-3.
      b. Dead load (D): Weight of MBR SKID material, platform, equipment and MBR System Control Panel
   4. MBR SKID design shall comply with the following structural criteria:

a. Maximum stresses on all MBR SKID components (tank outside walls, tank inner walls, beams, tubing, etc.) shall not exceed 60% of yield.
b. Deflections produced by the live loads and dead loads shall be limited to 1/2” or less.
c. Tank inner walls shall be designed to meet the criteria (a) and (b) above when one tank is empty and the other side of the tank has a full of water.
d. MBR SKID shall have at 4 lifting lugs or more to avoid deformation while MBR SKID is being lifted. The lifting lugs and MBR SKID shall be designed so that maximum stresses on all MBR SKID components (tank outside walls, tank inner walls, beams, tubing, etc.) while MBR SKID is being lifted dry shall not exceed 60% of yield.

5. One pipe support or unistrut or other support shall be applied to support pipes at least every 5 feet.
6. The structure of the equipment porch shall be considered as a part of MBR SKID and the same design criteria as MBR SKID shall be applied to the platform structure. Each piece of equipment shall not be supported by walkways but structure of the platforms.
7. Equipment porch shall be designed the way where all mechanical work, installation work and electrical work is completed prior to shipment so that there will be no such assembly work needed onsite to start up the MBR system. The equipment porch shall be a permanent installation before ship-out.

D. Walkways of Equipment Porch:
1. The walkway of the equipment porch shall be carbon steel checker plate, aluminum grating or FRP grating (must be UV resistant). The MBR Supplier shall choose one and clearly state the option the MBR Supplier has chosen in the proposal.
2. Loading for walkways:
a. Live load(L): 100 pounds per square foot
b. Dead load (D): Weight of platform material, equipment and MBR System Control Panel (only if walkways are designed to support those)
3. The walkways shall comply with the following structural criteria:
a. Deflections produced by the live loads shall be limited to 1/180th of the span length.

2.2 WIRING

A. General
1. All wiring, workmanship, and schematic wiring diagrams shall be in compliance with applicable standards and specifications set forth by the National Electric Code (NEC). All internal and external carbon steel surfaces shall be painted.

B. Conduit
1. The conduit shall be stainless steel or aluminum rigid conduit or galvanized rigid conduit with PVC coating or IMC conduit, or cable trays.
2. Soft conduit shall be limited to 4’ from the end of the rigid conduits and/or the terminal junction boxes.
3. All conduit and fittings shall be UL listed.
4. Liquid tight flexible metal conduit shall be constructed of a smooth, flexible, galvanized steel core with a smooth abrasion resistant, liquid tight, polyvinyl chloride cover.

5. Conduit shall be supported in accordance with Articles 346, 347, and 350 of the National Electric Code.
6. Conduit shall be sized according to the National Electric Code.

C. Grounding
1. The MBR Supplier shall ground all electrical equipment including instruments and motors on MBR SKID to the grounding point at MBR System Control Panel. The mounting surface of all ground connections shall have any paint removed before making final connections.
   a. Wire Labels
   b. The MBR Supplier shall put wire labels on each wire terminated at MBR SKID based on the electrical diagrams and control panel drawings.

2.3 PIPING

A. The MBR Supplier shall furnish piping and pipe supports. Pipe schedule are as follows:
1. Pipes for steel MBR package will be 304 stainless steel SCH 10 unless other material is required (i.e., for chemical compatibility requirements).
2. PVC pipes shall be PVC SCH 80 or PN 10.

B. Piping shall have welded, glued, flanged, or mechanical groove (Victaulic) connections.

C. Pipe supports shall be 304 stainless steel Unistrut (or equivalent) systems or 304 stainless steel angle and structural shapes with stainless hardware, clamps, and guides

D. Transitions from MBR Supplier piping to Contractor’s piping shall use ANSI B16.5 WNRF or slip-on RF 150 pound flanges unless otherwise noted or coordinated with the Contractor.

E. The MBR Supplier shall furnish required flange bolt kits for flange connections and manual valves. All the bolts, nuts and washers for flanges shall be 304 stainless steel.

F. Apply EPDM flexible joint as needed to cancel offset.

2.4 HANDRAILS

A. The MBR Supplier shall furnish and assembly handrails around the upper level of the equipment porch that meet or exceed the requirements of the OSHA design standard of a single 200lb load applied at any location along the top rail when the correct specification of pipe is used and the correct method of design is employed.

B. The material of the handrails shall be painted steel or aluminum.

C. Provide toe boards a minimum of 3" high where the platforms, runways or catwalks crossover open areas or open tanks.

D. Manufacture shall be Kee Safety, inc. or equivalent

E. The MBR Supplier shall provide the onsite assembly manual that shows how the component is assembled on site 2 weeks before shipment.

2.5 LADDER

A. Where external grating platforms do not provide access to the upper level of the equipment porch, ladders shall be provided. Ladders shall meet the requirements of the OSHA design standard.

B. The material of the ladders shall be aluminum or stainless steel.

C. The ladders and fasteners for the ladders shall be designed to be shipped loose and assembled and attached to the tank walls at the site.

D. The model shall be Cotterman - Walk Thru Rail or equivalent.

E. The MBR Supplier shall provide the onsite assembly manual that shows how the component is assembled on site 2 weeks before shipment.

PART 3 - EXECUTION (NOT USED)

END OF SECTION

SECTION 460754.02 – DES: SUBMERSIBLE MIXERS – WWTP

PART 1 - GENERAL

1.1 DESCRIPTION

A. The MBR Membrane Supplier shall furnish, install, test, and place in satisfactory operation, as shown on related Plans and as specified herein, one (1) submersible direct-driven mixer(s) for each of the anoxic basins of the project, complete with all appurtenances, accessories, and recommended spare parts necessary for a complete and workable installation.

1.2 SUBMITTALS

A. Submit shop drawings, manufacturer literature, diffuser layout drawings, and O&M Manuals as required in Section 013300, SUBMITTAL PROCEDURES, and Section 430754, PACKAGE MBR SYSTEM – GENERAL-WWTP, including parts lists and recommended spare parts.

PART 2 - MATERIALS

2.1 MANUFACTURER

A. Submersible mixers shall be Sulzer ABS RW Series or approved equal.

2.2 PERFORMANCE

A. Each mixer shall handle mixed liquor with up to 1% total suspended solids (TSS) by weight.

B. Minimum basin velocity: 0.30 m/s (1 ft/s).

C. Motor: 460 VAC V, 3-phase, 60 Hz.

D. IP68 rated housing, stainless-steel propeller, epoxy-coated motor housing.

E. Mounting: Guide rail or quick-disconnect bracket.

PART 3 - EXECUTION (NOT USED)

END OF SECTION

SECTION 460754.03 – DES: FLEXIBLE MEMBRANE DIFFUSERS – WWTP

PART 1 - GENERAL

1.1 DESCRIPTION

A. The MBR Membrane Supplier shall furnish, install, test, and place in satisfactory operation, as shown on related Plans and as specified herein in accordance with Section, fine bubble diffusers for aeration basins, complete with headers, supports, clamps, and all required accessories necessary for a complete and workable installation

1.2 SUBMITTALS

A. Submit shop drawings, manufacturer literature, diffuser layout drawings, and O&M Manuals as required in Section 013300, SUBMITTAL PROCEDURES, and Section 430754, PACKAGE MBR SYSTEM – GENERAL - WWTP, including parts lists and recommended spare parts. Include diffuser performance data, standard oxygen transfer efficiency (SOTE) test results, and installation instructions.

PART 2 - MATERIALS

2.1 MANUFACTURER

A. Diffusers shall be SSI Aeration 9-inch Fine Bubble Diffusers ECD270 Disc or approved equal.

2.2 PERFORMANCE

A. Airflow per diffuser: 4.0 SCFM max.

B. Diffuser membrane material: EPDM or silicone.

C. Diffuser body: ABS, PE, or PVC with stainless steel hardware.

D. Arrangement: Grid pattern to provide uniform air distribution throughout the basin; layout per MBR Supplier’s drawings.

E. Include all headers, lateral piping, support stands, clamps, and connectors required for installation.

PART 3 - EXECUTION (NOT USED)

END OF SECTION

SECTION 460754.04 – DES: SUBMERSIBLE PUMPS – WWTP

PART 1 - GENERAL

1.1 DESCRIPTION

A. The MBR Membrane Supplier shall furnish, install, test, and place in satisfactory operation, as shown on related Plans and as specified herein, Sulzer ABS XFP submersible wastewater pumps for raw or return activated sludge service, complete with all appurtenances, accessories, and recommended spare parts necessary for a complete and workable installation.

1.2 SUBMITTALS

A. Submit shop drawings, manufacturer literature, diffuser layout drawings, and O&M Manuals as required in Section 013300, SUBMITTAL PROCEDURES, and Section 430754, PACKAGE MBR SYSTEM – GENERAL-WWTP, including parts lists and recommended spare parts.

PART 2 - MATERIALS

2.1 MANUFACTURER

A. Pumps shall be Sulzer ABS XFP submersible wastewater pumps, or approved equal such as Flygt submersible pumps.

2.2 PERFORMANCE

A. Solids handling: Up to 1.2% total suspended solids (TSS) by weight.

B. Motor: Submersible motor, 460 VAC, 3-phase, 60 Hz, VFD compatible.

C. Pump construction: Stainless steel or cast iron pump casing with replaceable wear components; impeller: stainless steel.

D. Mechanical seals suitable for wastewater service.

E. Mounting: Guide rail system with quick-disconnect mechanism for removal and maintenance without dewatering the basin.

F. All pumps shall operate continuously without overheating at maximum duty point.

PART 3 - EXECUTION (NOT USED)

END OF SECTION

SECTION 460754.05 – DES: CENTRIFUGAL PUMPS – WWTP

PART 1 - GENERAL

1.1 DESCRIPTION

A. The MBR Membrane Supplier shall furnish, install, test, and place in satisfactory operation, as shown on related Plans and as specified herein, self-priming centrifugal pumps for clean permeate service, complete with all appurtenances, isolation valves, priming devices, and recommended spare parts necessary for a complete and workable installation.

1.2 SUBMITTALS

A. Submit shop drawings, manufacturer literature, diffuser layout drawings, and O&M Manuals as required in Section 013300, SUBMITTAL PROCEDURES, and Section 430754, PACKAGE MBR SYSTEM – GENERAL-WWTP, including parts lists and recommended spare parts.

PART 2 - MATERIALS

2.1 MANUFACTURER

A. Pumps shall be Ebara centrifugal pumps, or approved equal.

2.2 PERFORMANCE

A. Capacity: Total permeate pump capacity shall be capable of handling the maximum specified flows. All other centrifugal pumps shall be sized as needed according to specific design requirements.

B. Motor: TEFC, 460 VAC, 3-phase, 60 Hz.

C. Mechanical seal suitable for clean permeate.

D. Pump shall start from dry conditions and operate continuously without overheating at maximum duty point.

E. Include all required accessories for proper operation, including suction and discharge piping, isolation valves, and priming system.

PART 3 - EXECUTION (NOT USED)

END OF SECTION

SECTION 460754.07 DES: REGENERATIVE BLOWERS – WWTP

PART 1 - GENERAL

1.1 DESCRIPTION

A. The MBR Membrane Supplier shall furnish, install, test, and place in satisfactory operation, as shown on related Plans and as specified herein, blower package(s) for aeration service, including blower, motor, base, and all accessories necessary for a complete and workable installation.

1.2 SUBMITTALS

A. Submit shop drawings, manufacturer literature, diffuser layout drawings, and O&M Manuals as required in Section 013300, SUBMITTAL PROCEDURES, and Section 430754, PACKAGE MBR SYSTEM – GENERAL-WWTP, including parts lists and recommended spare parts.

PART 2 - MATERIALS

2.1 MANUFACTURER

A. Blowers shall be FPZ regenerative or positive displacement type, or approved equal.

2.2 PERFORMANCE

A. Capacity: Blower flows and discharge pressures should be capable of meeting required oxygen transfer and minimum mixing requirements for each package, at elevations listed for each site.

B. Motor: 460 VAC, 3-phase, 60 Hz.

C. Maximum noise level: ≤ 90 dBA at 3 ft per blower.

D. Package to include inlet filter/silencer, discharge silencer, check valve, pressure relief valve, gauges, and flexible connectors.

E. Package shall operate continuously at maximum duty point without overheating or excessive vibration.

PART 3 - EXECUTION (NOT USED)

END OF SECTION

SECTION 460754.07 – DES: PROCESS INSTRUMENTATION – WWTP

PART 1 - GENERAL

1.1 DESCRIPTION

A. The MBR Membrane Supplier shall furnish, install, test, and place in satisfactory operation, as shown on related Plans and as specified herein, all process instrumentation for the package WWTP, including:

B. Analytical instruments: pH probe and DO probe with associated transmitters.

C. Pressure instruments: pressure gauges and pressure transmitters.

D. Level instruments: level switches and level transmitters.

E. All instruments shall be supplied with the necessary wiring, mounting hardware, and accessories for a complete and functional installation.

1.2 SUBMITTALS

A. Submit shop drawings, manufacturer literature, calibration certificates, and O&M Manuals as required in Section 013300, SUBMITTAL PROCEDURES, and Section 430754, PACKAGE MBR SYSTEM – GENERAL-WWTP. Submittals shall include instrument locations, ranges, installation instructions, and recommended spare parts.

PART 2 - MATERIALS

2.1 2.01 MANUFACTURER

A. Analytical instruments: Endress+Hauser – pH and DO probes, Turbidity Analyzer, and transmitters.

B. Pressure instruments: Nuova Fimma (gauges), Endress+Hauser (transmitters).

C. Level instruments: Filsa (level switches), Vega (level transmitters).

D. No equals will be considered.

2.2 PERFORMANCE

A. A. Analytical Instruments
   1. pH probe: suitable for continuous wastewater operation.
   2. DO probe: suitable for continuous wastewater operation.
   3. Turbidity Analyzer: capable of on-line permeate turbidity measurement of permeate system. Turbidity analyzer must have capability of identifying individual Submerged Membrane Unit (SMU) with turbidity leakage, if leakage should occur.
   4. Transmitters: Provide 4–20 mA output and compatibility with PLC/SCADA system.

B. Pressure Instruments
   1. Pressure gauges: stainless steel or compatible construction for wastewater service. All pumps shall have inlet and discharge gauges for troubleshooting purposes. All gauges on liquid lines not for clean water service shall include a diaphragm seal for gauges protection.
   2. Pressure transmitters: 4–20 mA output, with accuracy ± 6% of full scale. Pressure transmitters shall be included on both permeate piping and scour air piping to protect membranes.

C. Level Instruments
   1. Level switches: Float switches, suitable for basin or tank service.
   2. Level transmitters: 4–20 mA output, compatible with PLC/SCADA system.

PART 3 - EXECUTION (NOT USED)

END OF SECTION

SECTION 460754.08 – PACKAGE MBR SYSTEM-LAYOUT DRAWINGS-WWTP

PART 1 - PRELIMINARY LAYOUT DRAWINGS

PART 2 - NOT USED

PART 3 - NOT USED

END OF SECTION

NOT FOR CONSTRUCTION

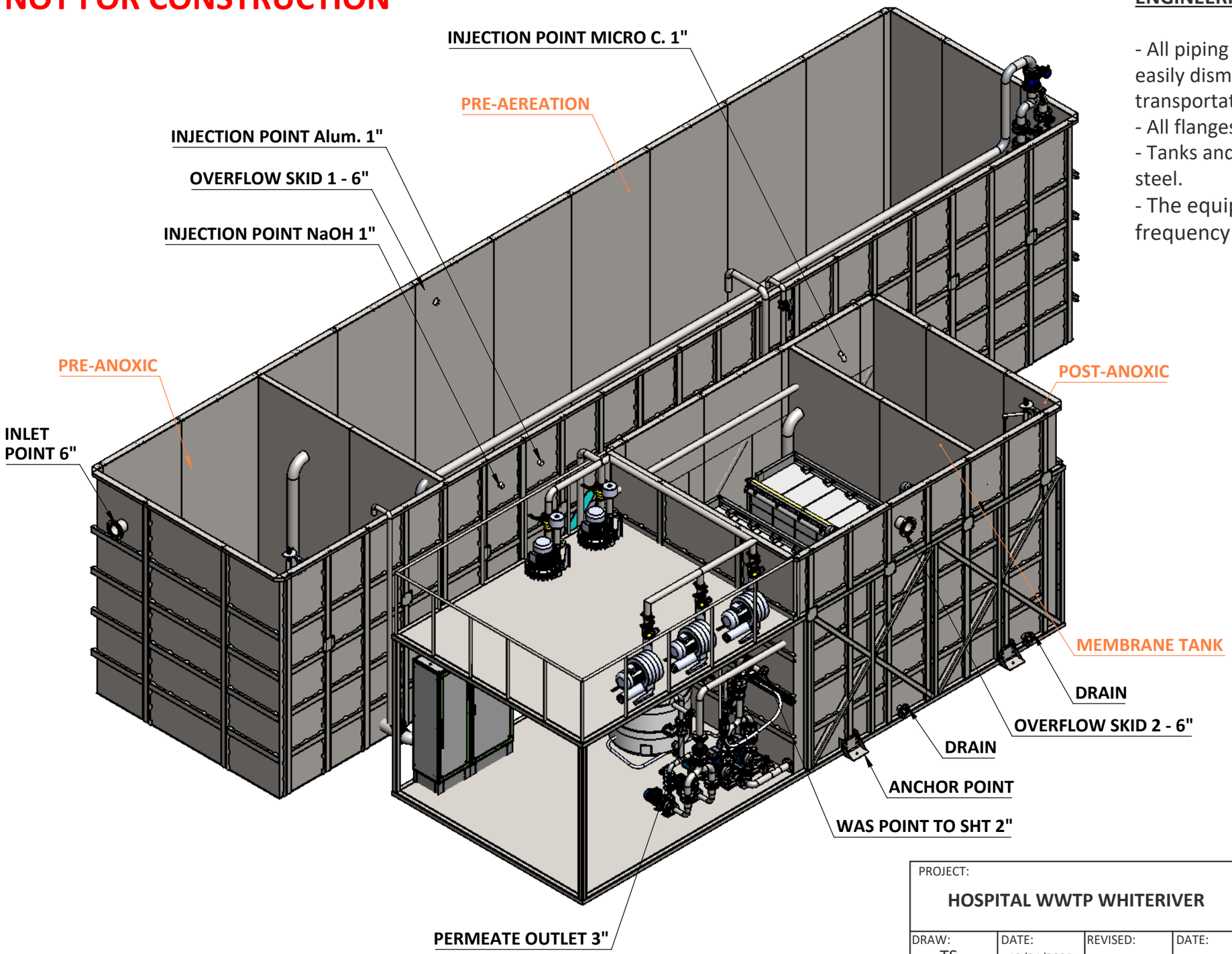

ENGINEERING NOTES

- All piping installed above the tanks can be easily dismantled and installed for transportation purposes.
- All flanges shall be ANSI B16.5 150 LBS type
- Tanks and pipes will be made of 304 stainless steel.
- The equipment will all be selected at a frequency of 60 Hz.

PROJECT: HOSPITAL WWTP WHITERIVER				SIGMADAF
DRAW: TS	DATE: 12/04/2025	REVISED: --	DATE:	DESCRIPTION: GENERAL ASSEMBLY
Dibujo confidencial propiedad de SIGMA GROUP. Uso restringido a personal y empresas autorizadas expresamente por SIGMA				
Confidential drawing owned by SIGMA GROUP. Use restricted to personnel and companies expressly authorized by SIGMA.				CODE: / REV: 02
Cotas en mm, tolerancias según: ISO 2768-1 clase m	Dimensions in mm, tolerances according to ISO 2768-1 class m			WEIGHT: / MATERIAL: / SCALE: - / PAGE 1 OF 5 / A3

NOT FOR CONSTRUCTION

SCALE 1 : 60

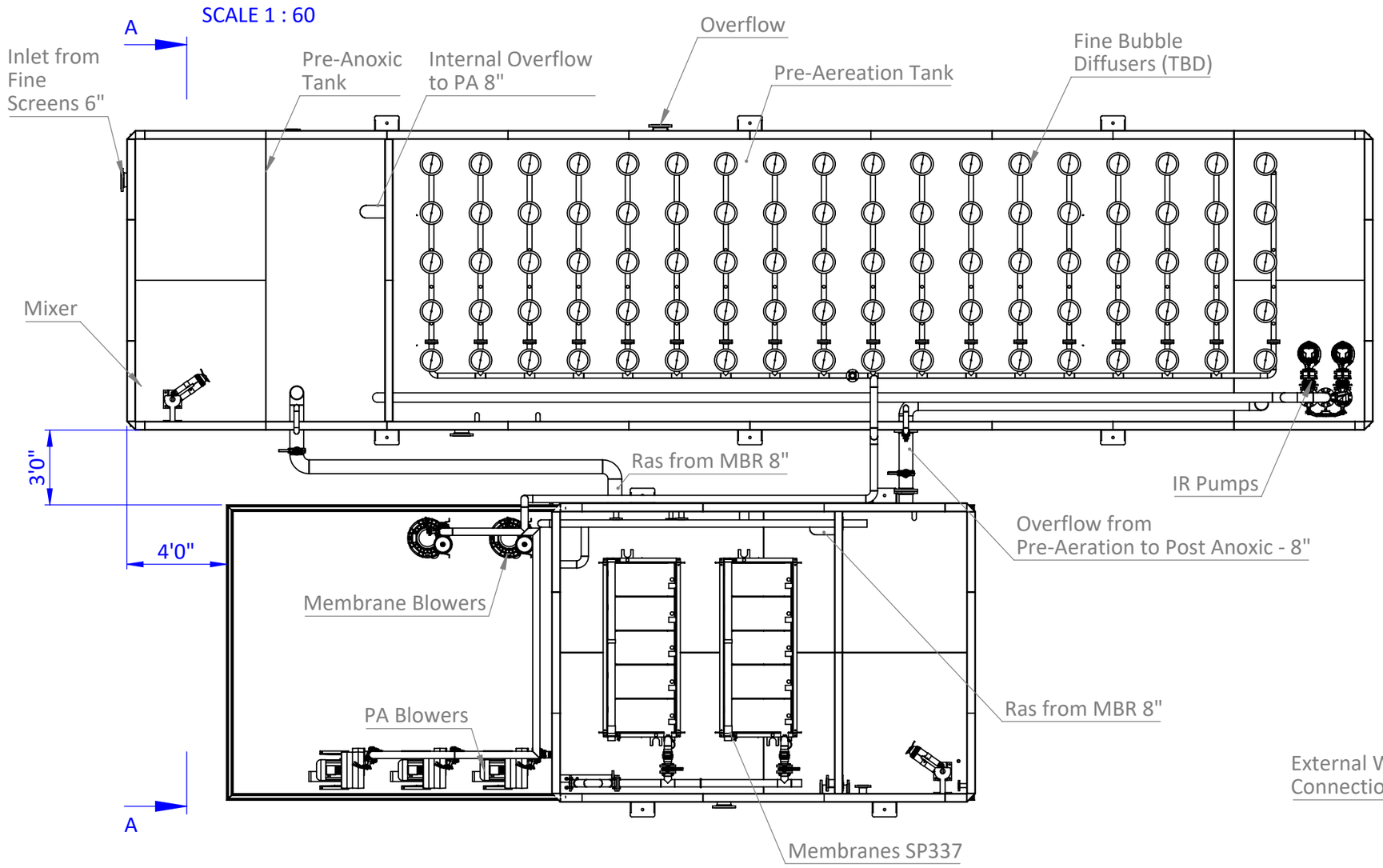

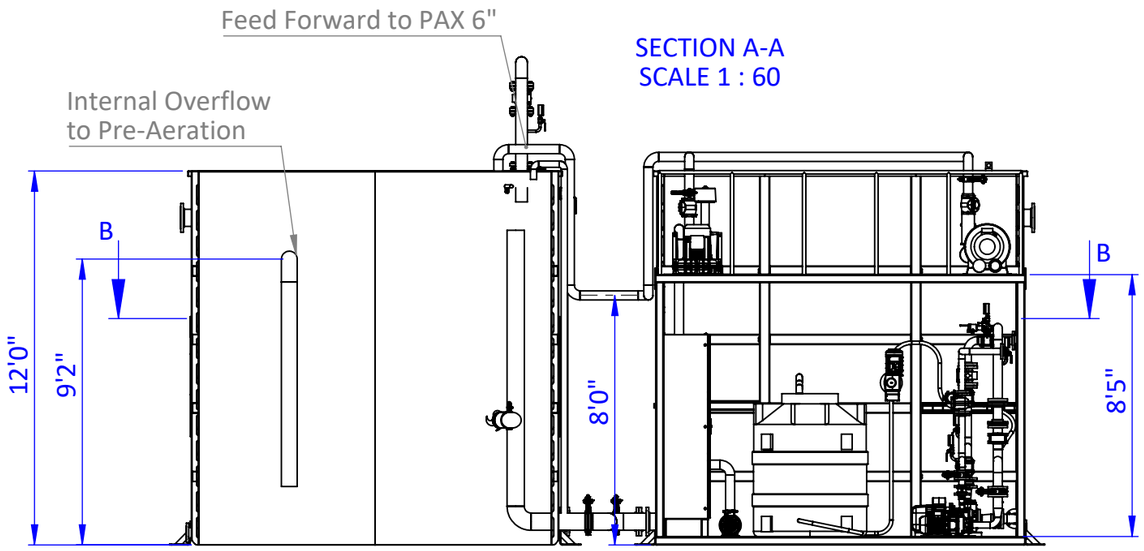

SECTION A-A
SCALE 1 : 60

*This view shows layout of lower porch

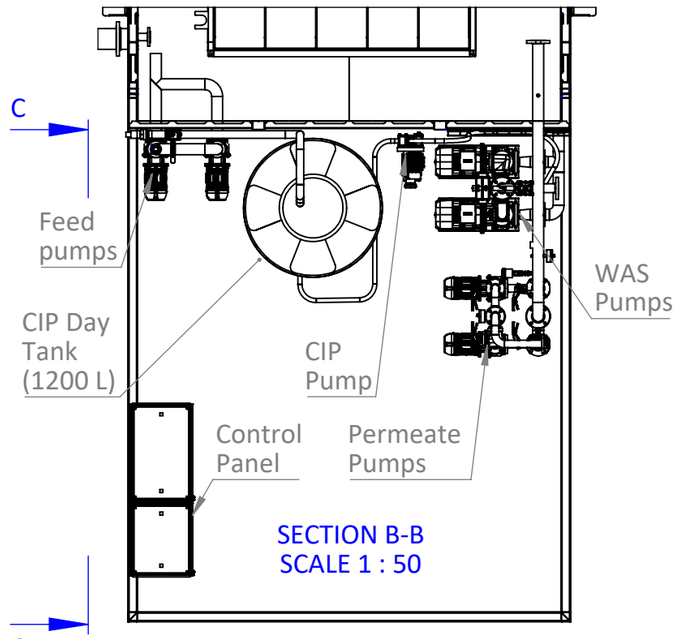

SECTION B-B
SCALE 1 : 50

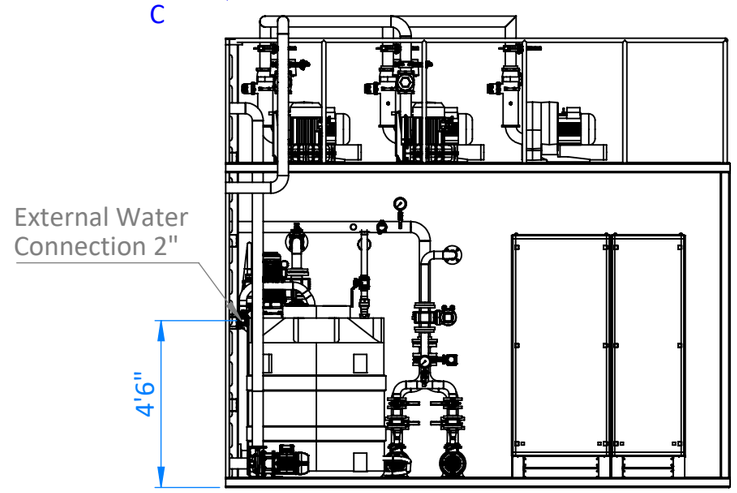

SECTION C-C
SCALE 1 : 50

PROJECT: HOSPITAL WWTP WHITERIVER				SIGMADAF
DRAW: TS	DATE: 12/04/2025	REVISED: --	DATE:	DESCRIPTION: GENERAL ASSEMBLY
Dibujo confidencial propiedad de SIGMA GROUP. Uso restringido a personal y empresas autorizadas expresamente por SIGMA				
Confidential drawing owned by SIGMA GROUP. Use restricted to personnel and companies expressly authorized by SIGMA.				CODE: / REV: 02
Cotas en mm, tolerancias según: ISO 2768-1 clase m	Dimensions in mm, tolerances according to ISO 2768-1 class m	WEIGHT:	MATERIAL:	SCALE: - / PAGE 2 OF 5 / A3

SCALE 1 : 65

NOT FOR CONSTRUCTION

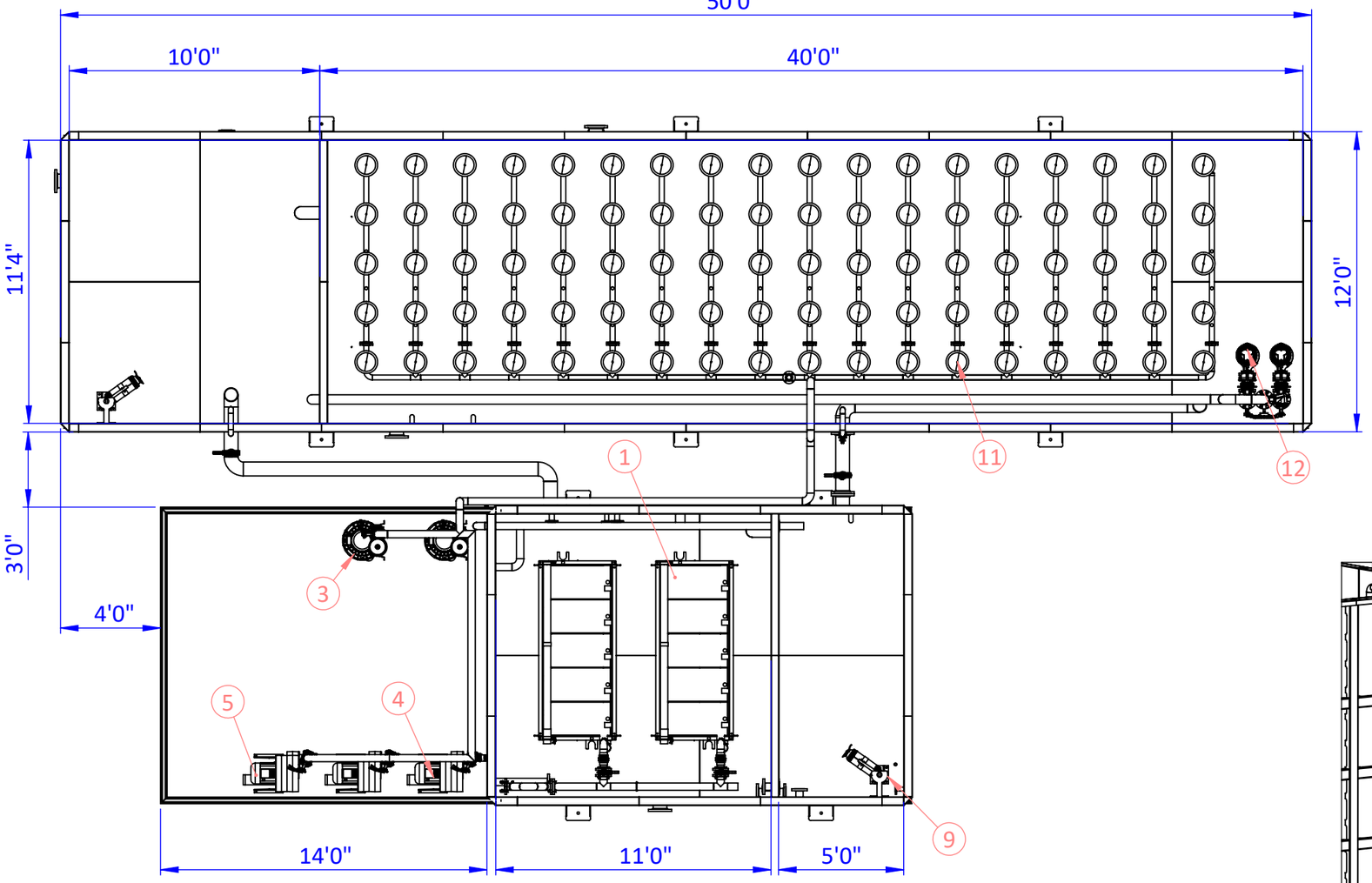

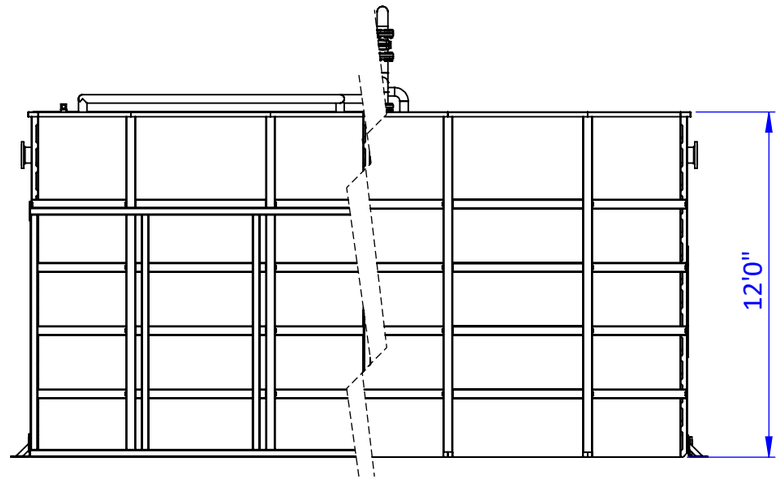

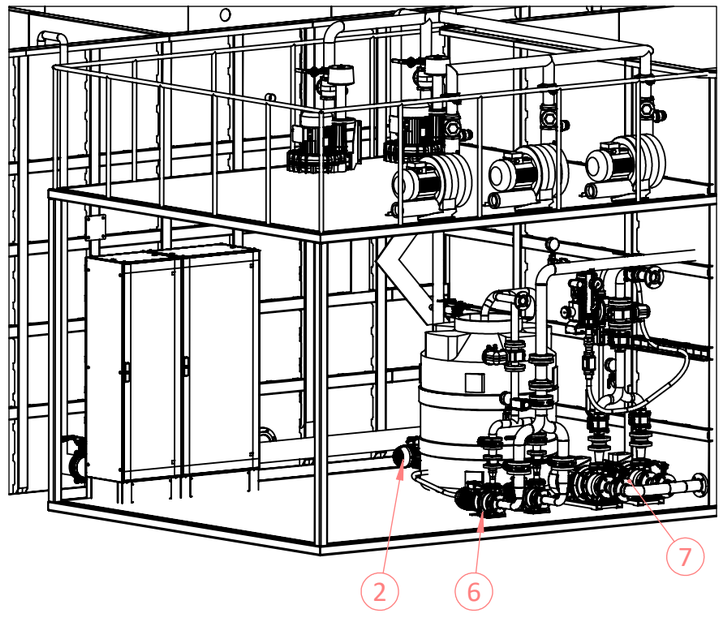

Nº	DESCRIPTION	QUANTITY	MODEL
1	MEMBRANES	2	SP337
2	FEED FORWARD PUMPS	2 (1 DUTY + 1 STANDBY)	3S 65-125/4.0
3	MBR AIR BLOWER	2	95 SCFM - SCL e07-MD MOR M.E. 7.5 hp
4	PA BLOWER	2	126 SCFM - SCL e08-MD MOR IE3 M.E. 10 hp
5	COMMON BLOWER	1 STANDBY	126 SCFM - SCL e08-MD MOR IE3 M.E. 10 hp
6	PERMEATE PUMPS	2 (1 DUTY + 1 STANDBY)	3S 40-125/3.06
7	WAS PUMP	2 (1 DUTY + 1 STANDBY)	3S4 32-200/0.55R
8	MIXER PREANOXIC TANK	1	XRW 2121 - PA18/4 60HZ
9	MIXER POSTANOXIC TANK	1	XRW 2121 - PA18/4 60HZ
10	CONTROL PANEL	1	SIGMA PANEL
11	DIFFUSERS	FINE BUBBLE DIFFUSERS	ECD270 SSI DIFFUSER 9"
12	IR PUMPS	2(1 DUTY + 1 STANDBY)	3LS4 80-160/2.2R

PROJECT:

HOSPITAL WWTP WHITERIVER

SIGMADAF

DRAW:	DATE:	REVISED:	DATE:
TS	12/04/2025	--	

DESCRIPTION:

GENERAL ASSEMBLY

Dibujo confidencial propiedad de SIGMA GROUP. Uso restringido a personal y empresas autorizadas expresamente por SIGMA

Confidential drawing owned by SIGMA GROUP. Use restricted to personnel and companies expressly authorized by SIGMA.

CODE:

REV: 02

Cotas en mm, tolerancias según: ISO 2768-1 clase m

Dimensions in mm, tolerances according to ISO 2768-1 class m

WEIGHT:

MATERIAL:

SCALE: -

A3

NOT FOR CONSTRUCTION

SCALE 1:70

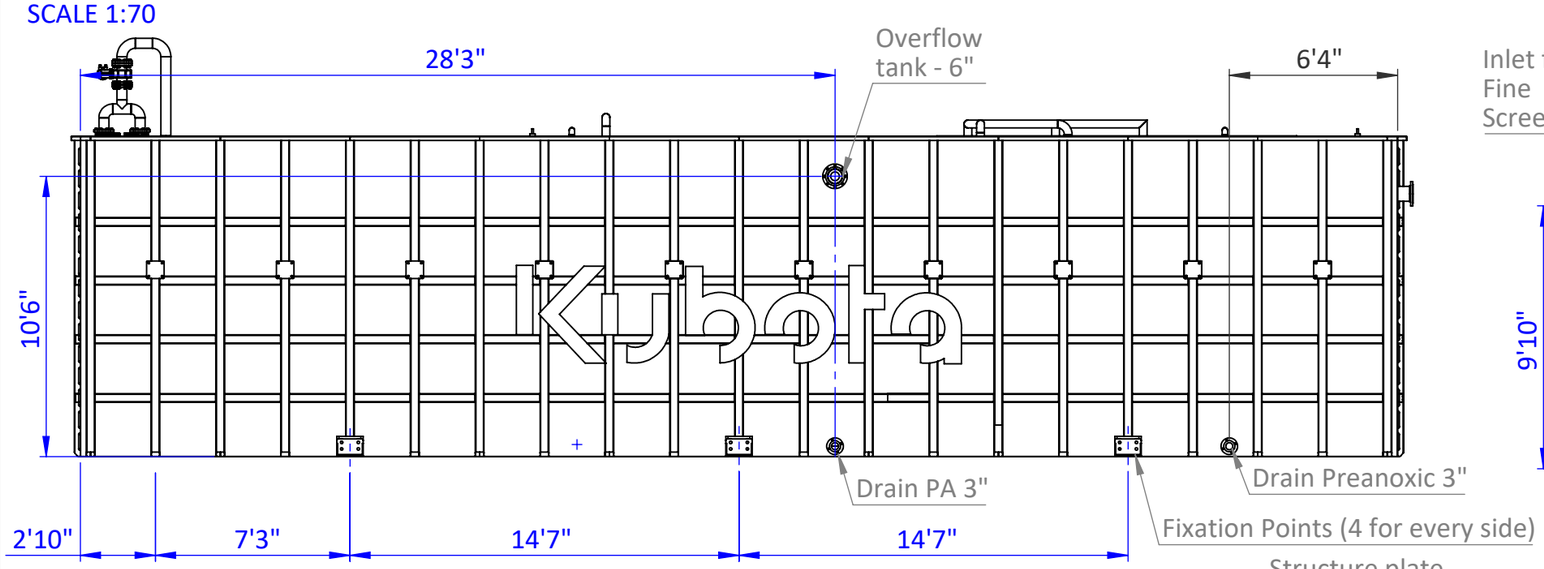

SCALE 1:70

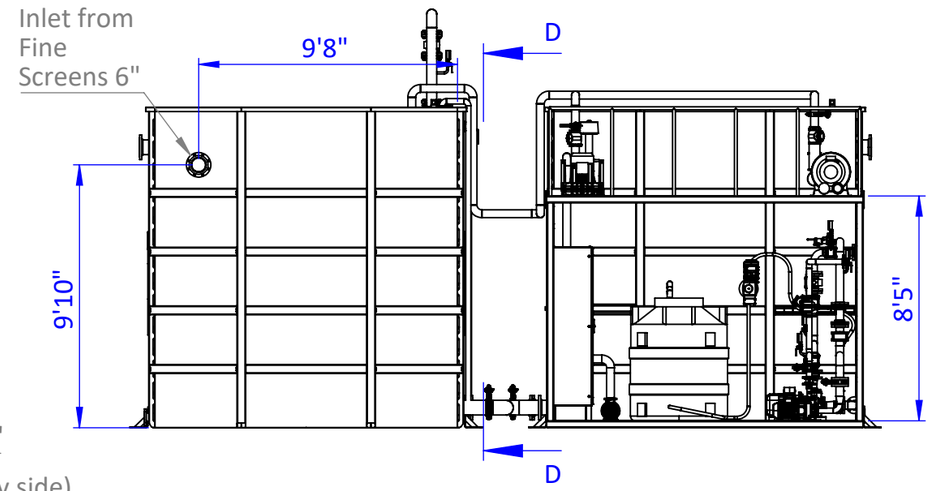

SCALE 1:70

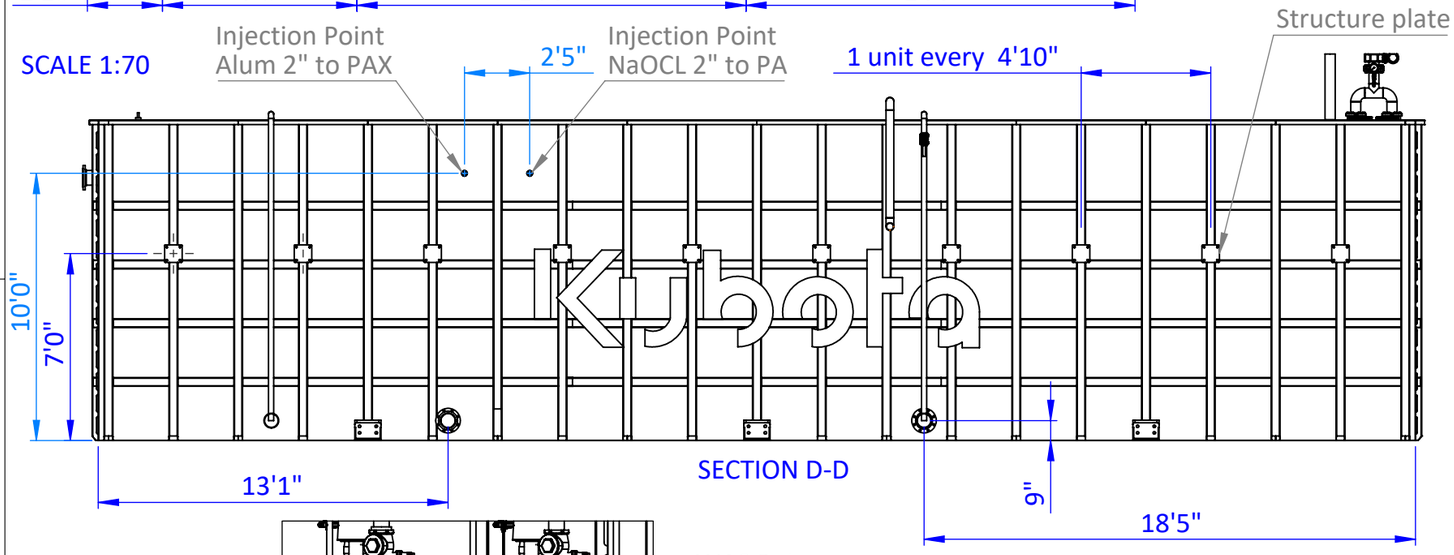

SECTION D-D

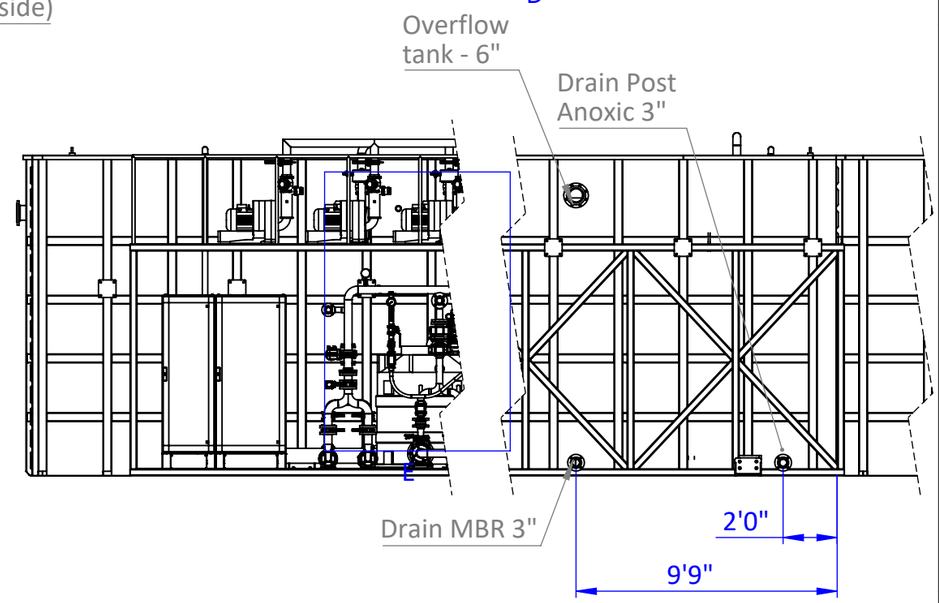

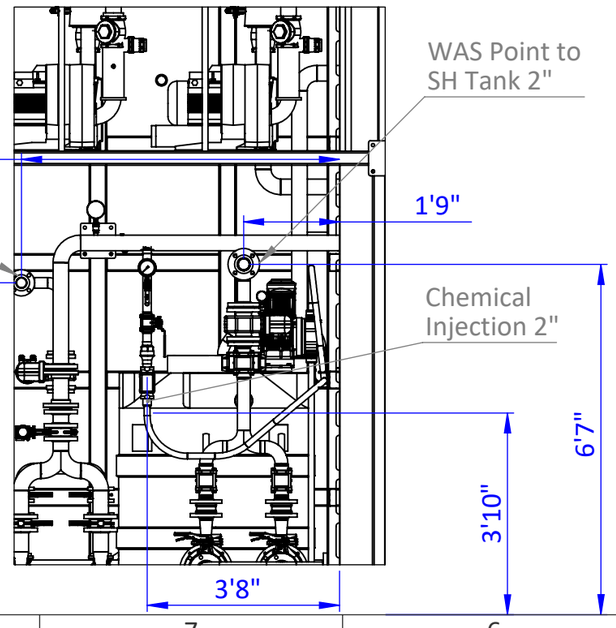

DETAIL E
SCALE 1 : 35

PROJECT: HOSPITAL WWTP WHITERIVER				SIGMADAF
DRAW: TS	DATE: 12/04/2025	REVISED: --	DATE:	DESCRIPTION: GENERAL ASSEMBLY
Dibujo confidencial propiedad de SIGMA GROUP. Uso restringido a personal y empresas autorizadas expresamente por SIGMA				
Confidential drawing owned by SIGMA GROUP. Use restricted to personnel and companies expressly authorized by SIGMA.				CODE: / REV: 02
Cotas en mm, tolerancias según: ISO 2768-1 clase m	Dimensions in mm, tolerances according to ISO 2768-1 class m	WEIGHT:	MATERIAL:	SCALE: - / PAGE 4 OF 5 / A3

NOT FOR CONSTRUCTION

DETAIL FIXATION PLATE MBR
SCALE 1:2

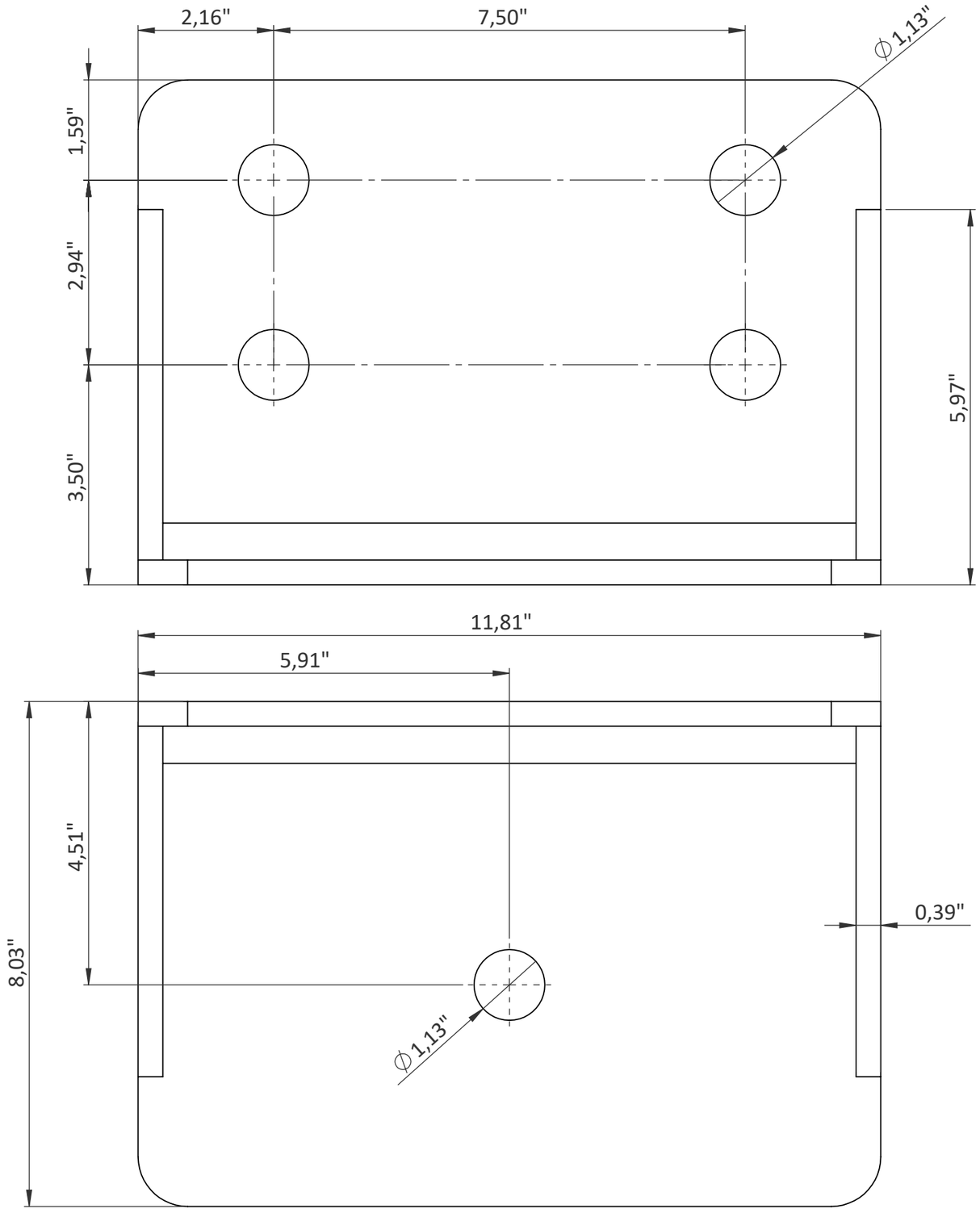

DETAIL FIXATION STRUCTURE MBR
SCALE 1:2

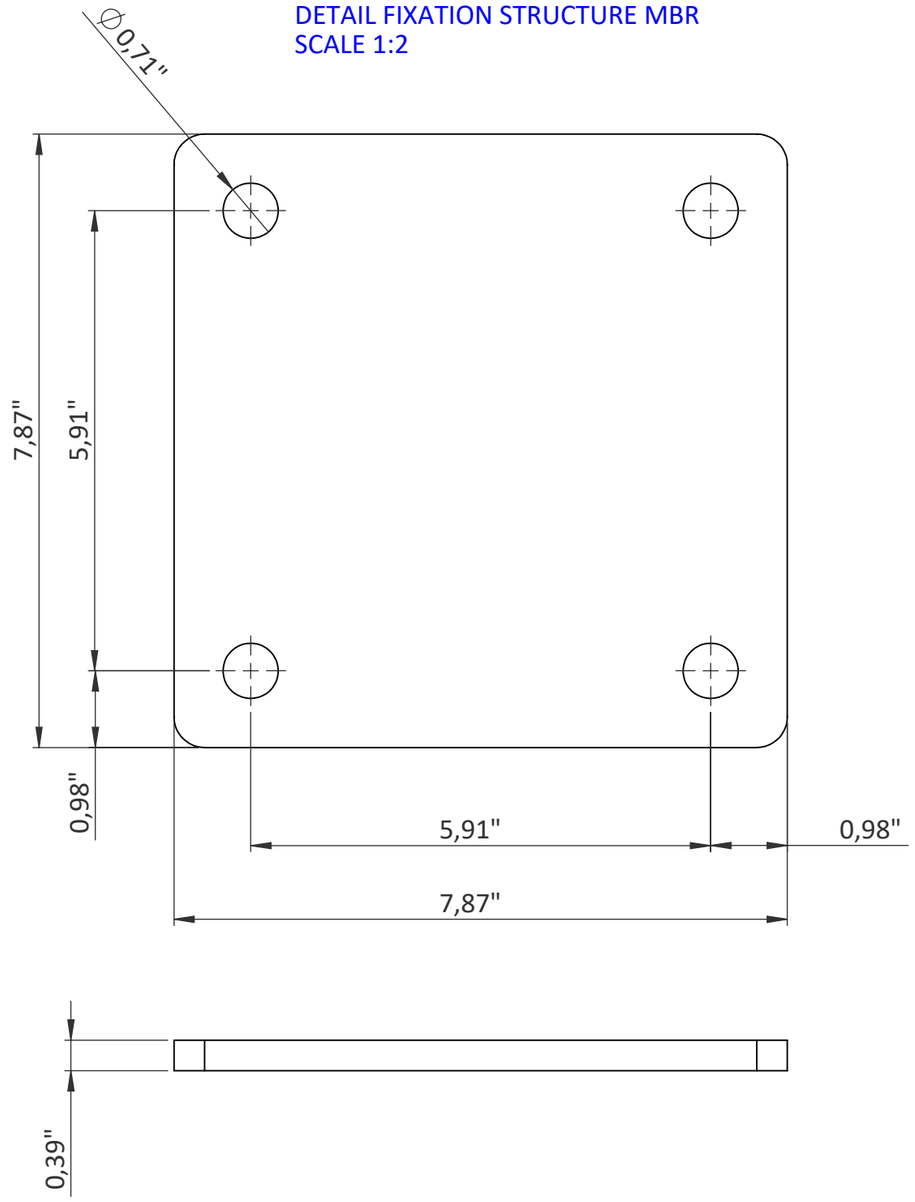

PROJECT: **HOSPITAL WWTP WHITERIVER**				SIGMADAF
DRAW: TS	DATE: 12/04/2025	REVISED: --	DATE:	DESCRIPTION: GENERAL ASSEMBLY
Dibujo confidencial propiedad de SIGMA GROUP. Uso restringido a personal y empresas autorizadas expresamente por SIGMA				
Confidential drawing owned by SIGMA GROUP. Use restricted to personnel and companies expressly authorized by SIGMA.				CODE: / REV: 02
Cotas en mm, tolerancias según: ISO 2768-1 clase m	Dimensions in mm, tolerances according to ISO 2768-1 class m	WEIGHT:	MATERIAL:	SCALE: - / PAGE 5 OF 5 / A3

NOT FOR CONSTRUCTION

ENGINEERING NOTES

- All piping installed above the tanks can be easily dismantled and installed for transportation purposes.
- All flanges shall be ANSI B16.5 150 LBS type
- Tanks and pipes will be made of 304 stainless steel.
- The equipment will all be selected at a frequency of 60 Hz.

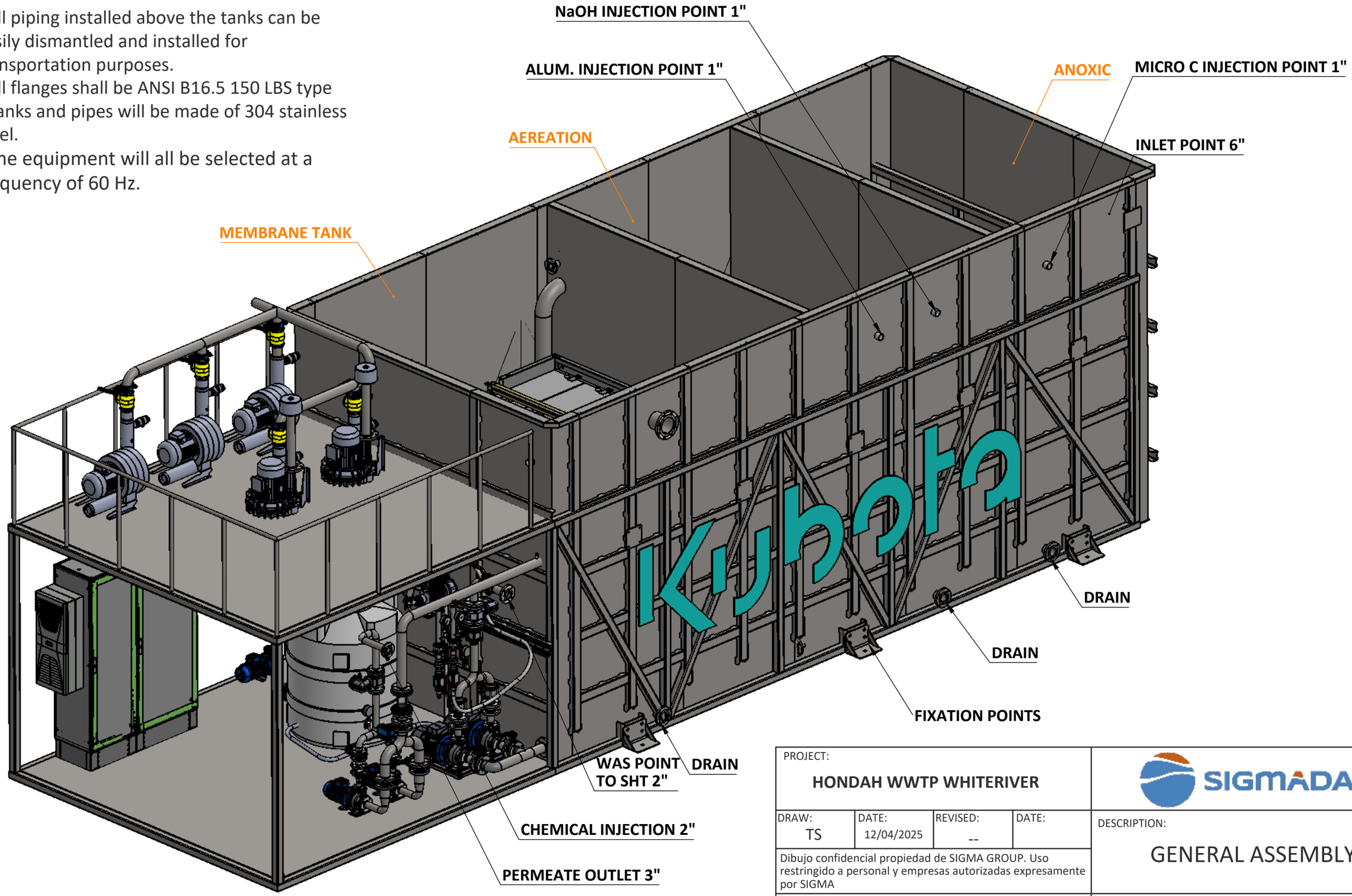

PROJECT: HONDAH WWTP WHITERIVER				SIGMADAF
DRAW: TS	DATE: 12/04/2025	REVISED: --	DATE:	DESCRIPTION: GENERAL ASSEMBLY
Dibujo confidencial propiedad de SIGMA GROUP. Uso restringido a personal y empresas autorizadas expresamente por SIGMA				
Confidential drawing owned by SIGMA GROUP. Use restricted to personnel and companies expressly authorized by SIGMA.				CODE: / REV: 02
Cotas en mm, tolerancias según: ISO 2768-1 clase m	Dimensions in mm, tolerances according to ISO 2768-1 class m	WEIGHT:	MATERIAL:	SCALE: - / PAGE 1 OF 4 / A3

NOT FOR CONSTRUCTION

SCALE 1 : 50

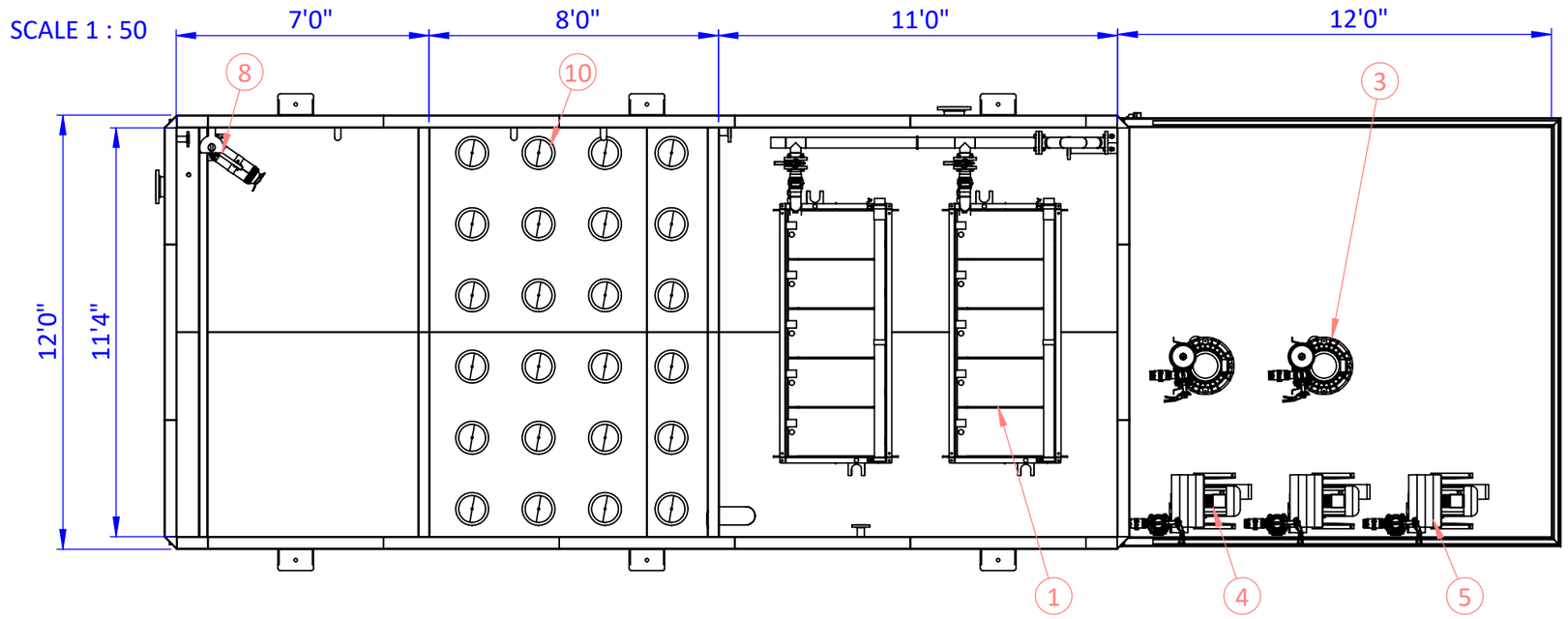

SECCIÓN F-F
ESCALA 1 : 50

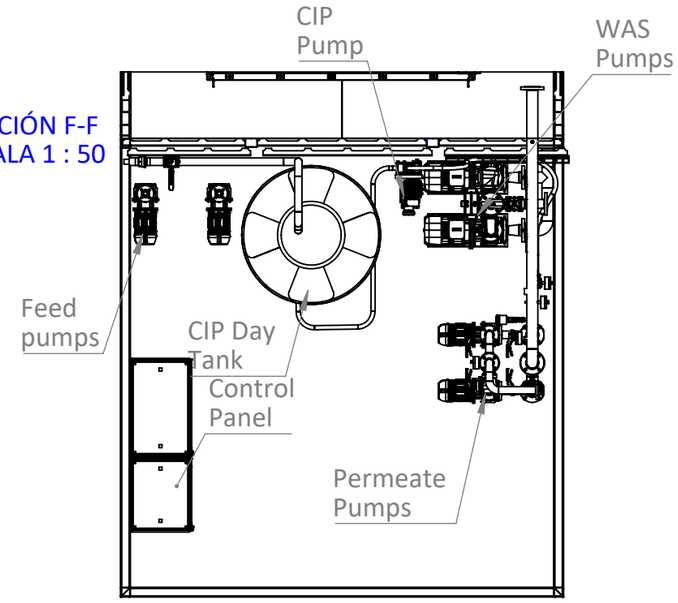

SECTION A-A
SCALE 1 : 50

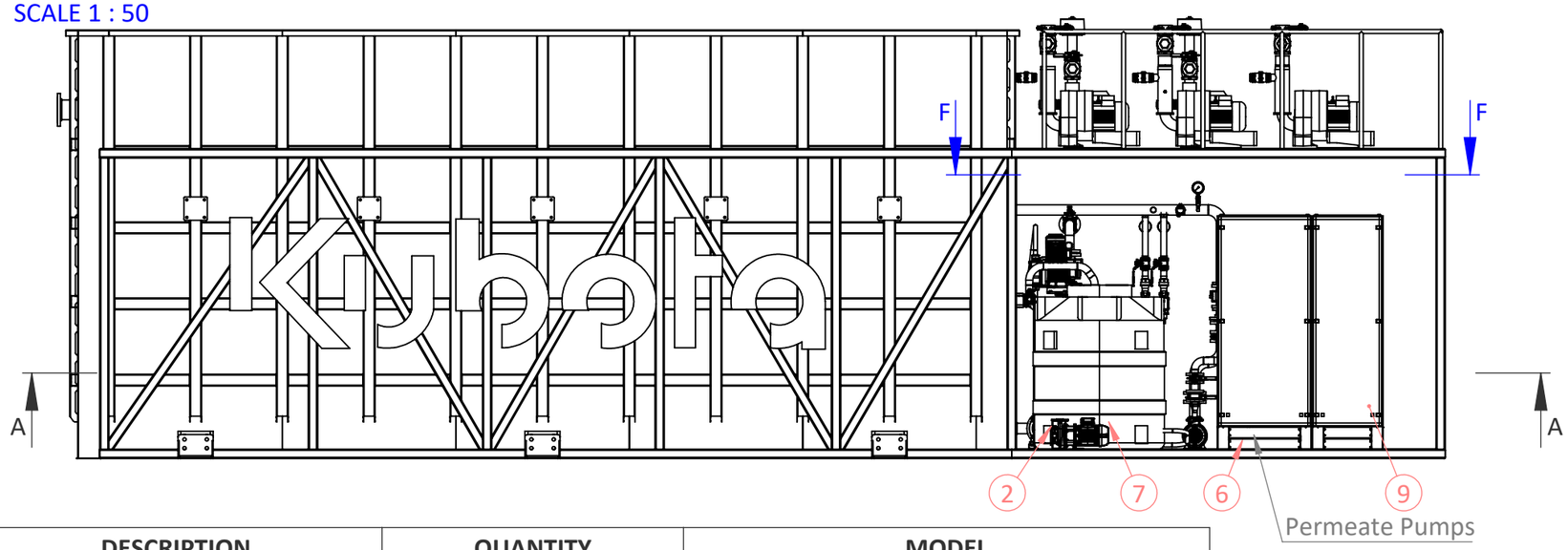

SCALE 1 : 50

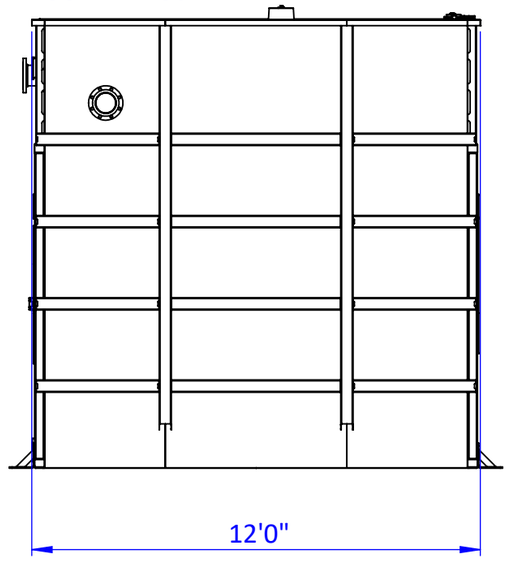

Nº	DESCRIPTION	QUANTITY	MODEL
1	MEMBRANES	2	SP337
2	FEED FORWARD PUMPS	2 (1 DUTY + 1 STANDBY)	3S 65-125/4.0
3	MBR AIR BLOWER	2	95 SCFM - SCL e07-MD MOR M.E. 7.5 hp
4	PA BLOWER	2	95 SCFM - SCL e07-MD MOR M.E. 7.5 hp
5	COMMON BLOWER	1 STANDBY	95 SCFM - SCL e07-MD MOR M.E. 7.5 hp
6	PERMEATE PUMPS	2 (1 DUTY + 1 STANDBY)	3S 40-125/3.06
7	WAS PUMP	2 (1 DUTY + 1 STANDBY)	3S4 32-200/0.55R
8	MIXER ANOXIC TANK	1	XRW 2121 - PA18/4 60HZ
9	CONTROL PANEL	1	SIGMA PANEL
10	DIFFUSERS	FINE BUBBLE DIFFUSERS	ECD270 SSI DIFFUSER 9"

PROJECT:
HONDAH WWTP WHITERIVER

SIGMADAF

DRAW:	DATE:	REVISED:	DATE:
TS	12/04/2025	--	

DESCRIPTION:
GENERAL ASSEMBLY

Dibujo confidencial propiedad de SIGMA GROUP. Uso restringido a personal y empresas autorizadas expresamente por SIGMA

Confidential drawing owned by SIGMA GROUP. Use restricted to personnel and companies expressly authorized by SIGMA.

CODE:
REV: 02

Cotas en mm, tolerancias según: ISO 2768-1 clase m

Dimensions in mm, tolerances according to ISO 2768-1 class m

WEIGHT: | MATERIAL: | SCALE: - | PAGE 2 OF 4 | A3

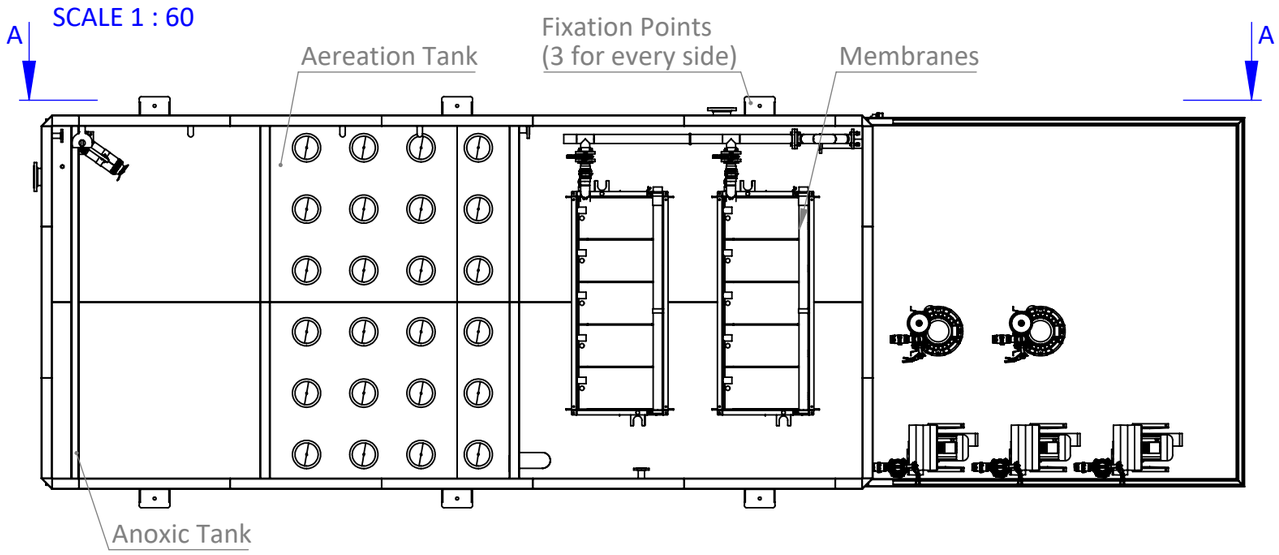

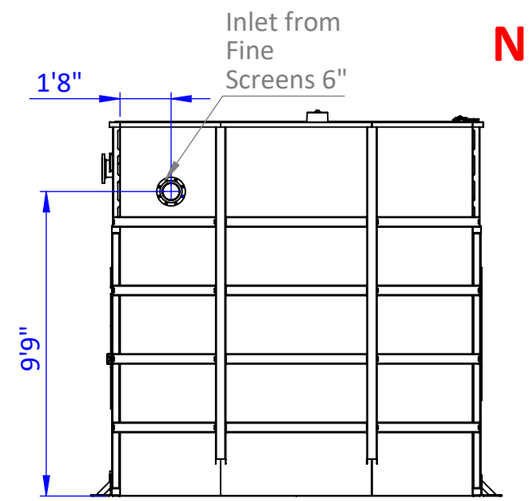

NOT FOR CONSTRUCTION

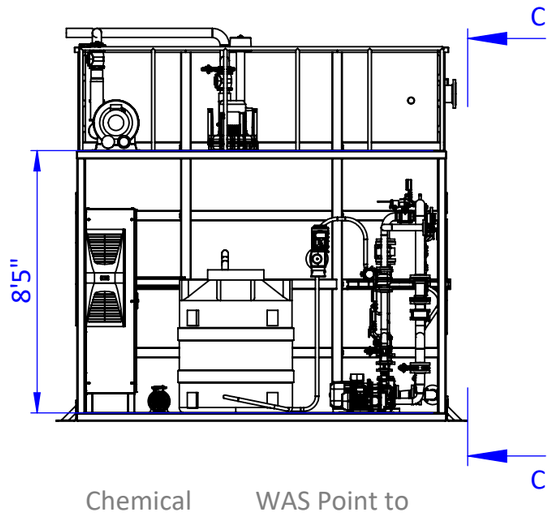

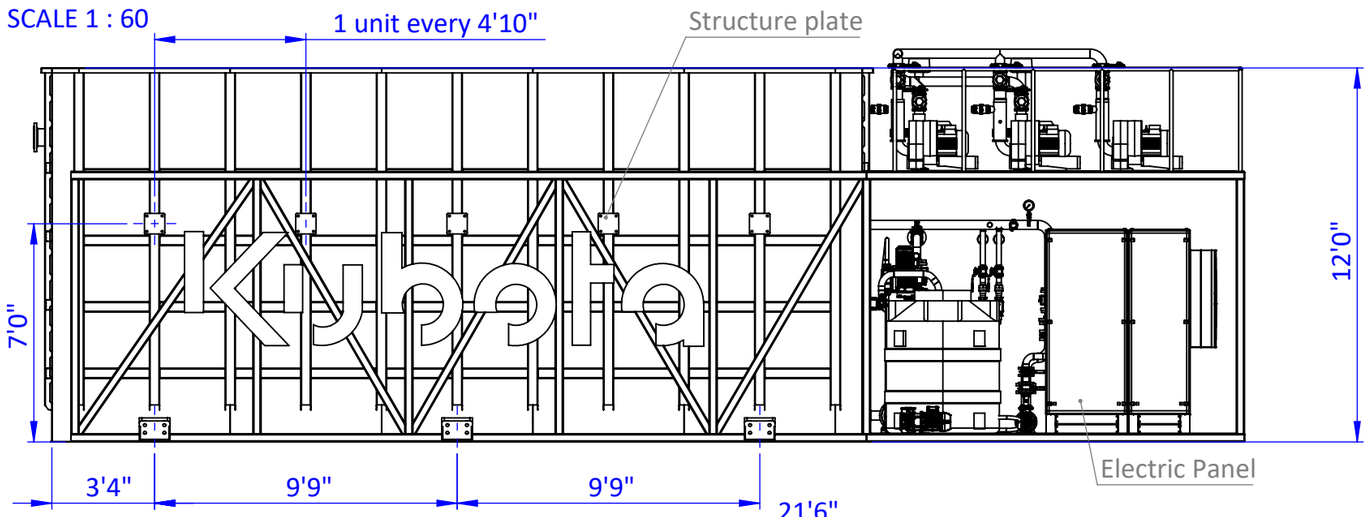

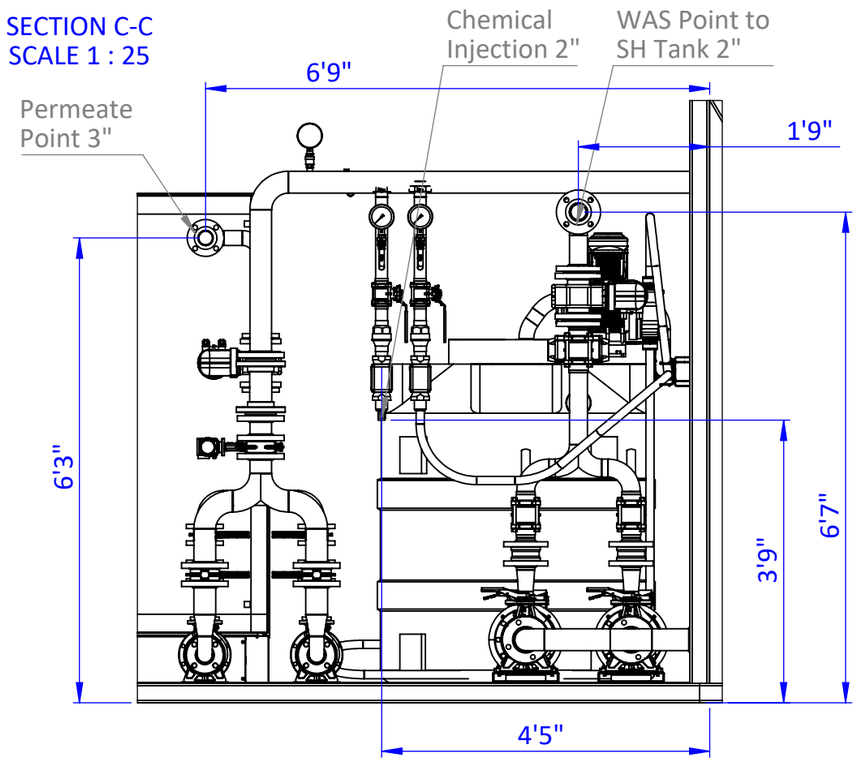

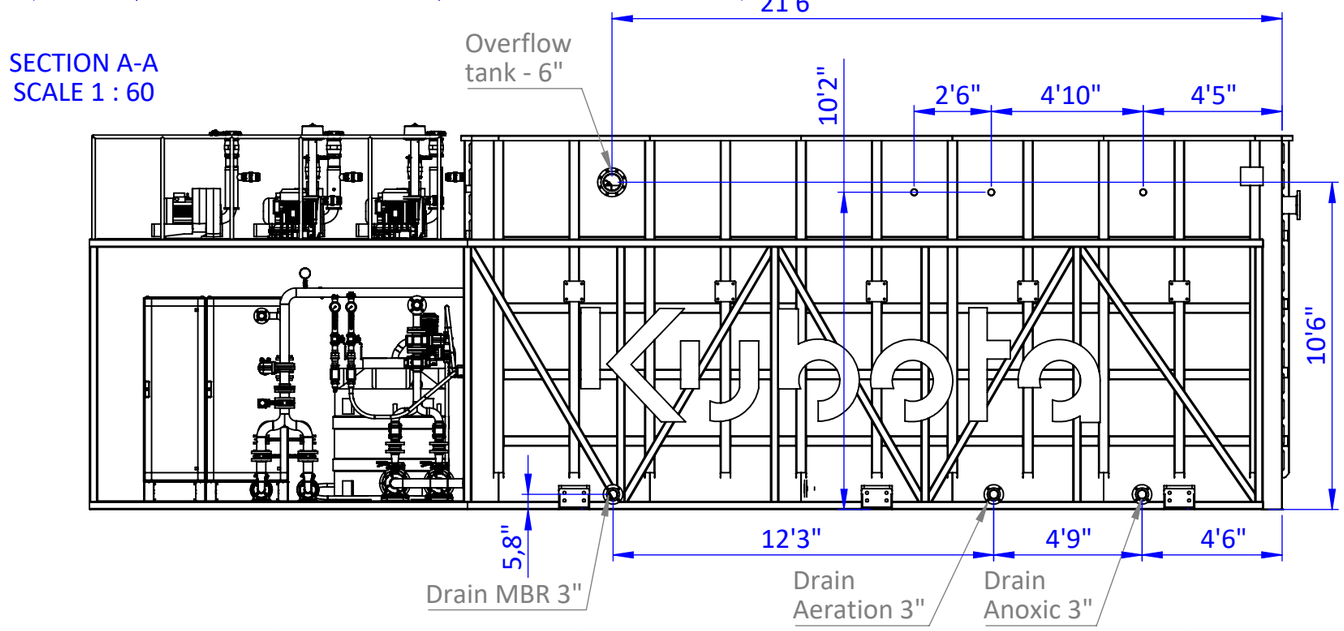

PROJECT: HONDAH WWTP WHITERIVER			SIGMADAF
DRAW: TS	DATE: 12/04/2025	REVISED: --	DATE:
DESCRIPTION: GENERAL ASSEMBLY			
Dibujo confidencial propiedad de SIGMA GROUP. Uso restringido a personal y empresas autorizadas expresamente por SIGMA			
Confidential drawing owned by SIGMA GROUP. Use restricted to personnel and companies expressly authorized by SIGMA.		CODE:	REV: 02
Cotas en mm, tolerancias según: ISO 2768-1 clase m	Dimensions in mm, tolerances according to ISO 2768-1 class m	WEIGHT:	MATERIAL:
SCALE: -	PAGE 3 OF 4	A3	

NOT FOR CONSTRUCTION

DETAIL FIXATION PLATE MBR
SCALE 1:2

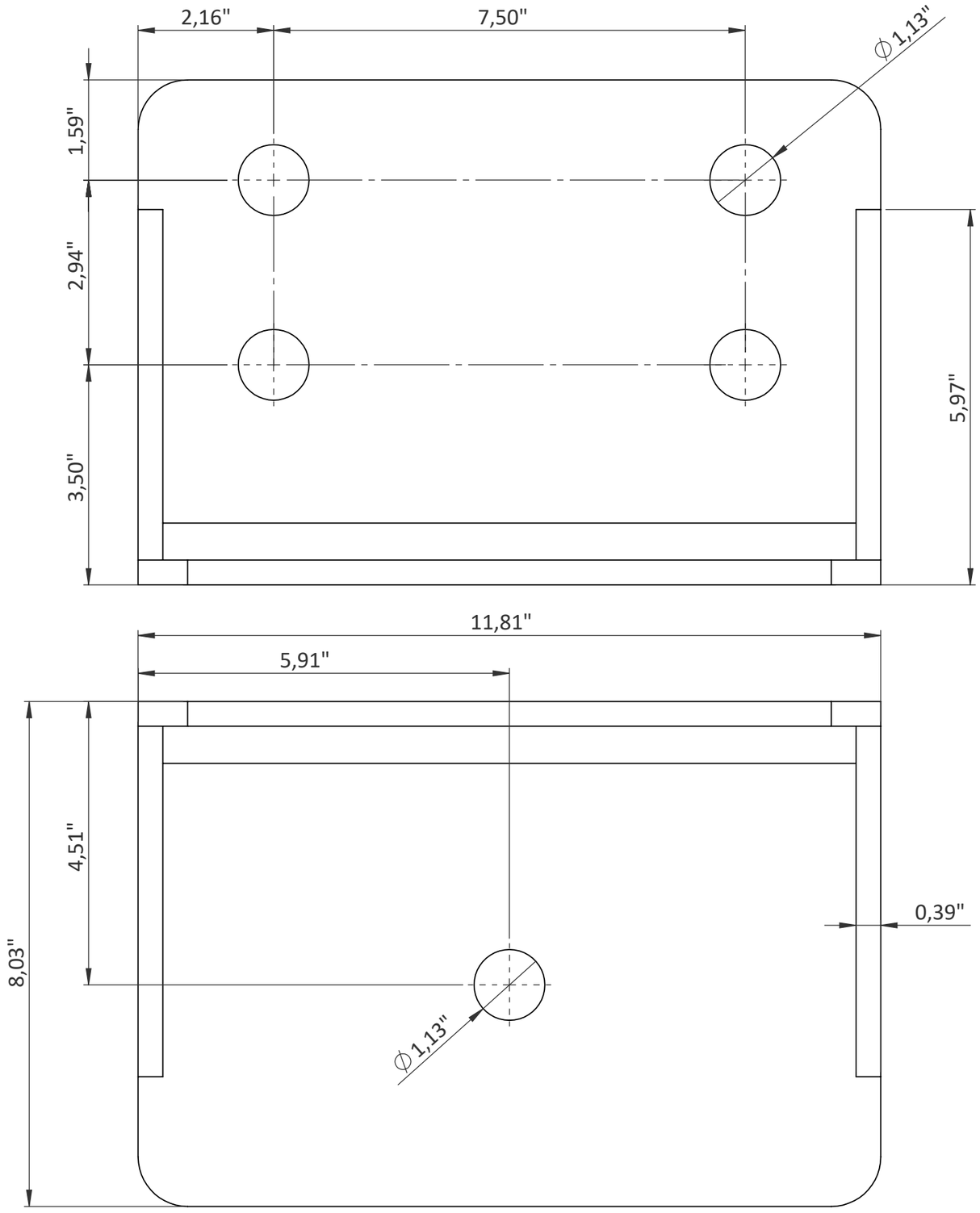

DETAIL FIXATION STRUCTURE MBR
SCALE 1:2

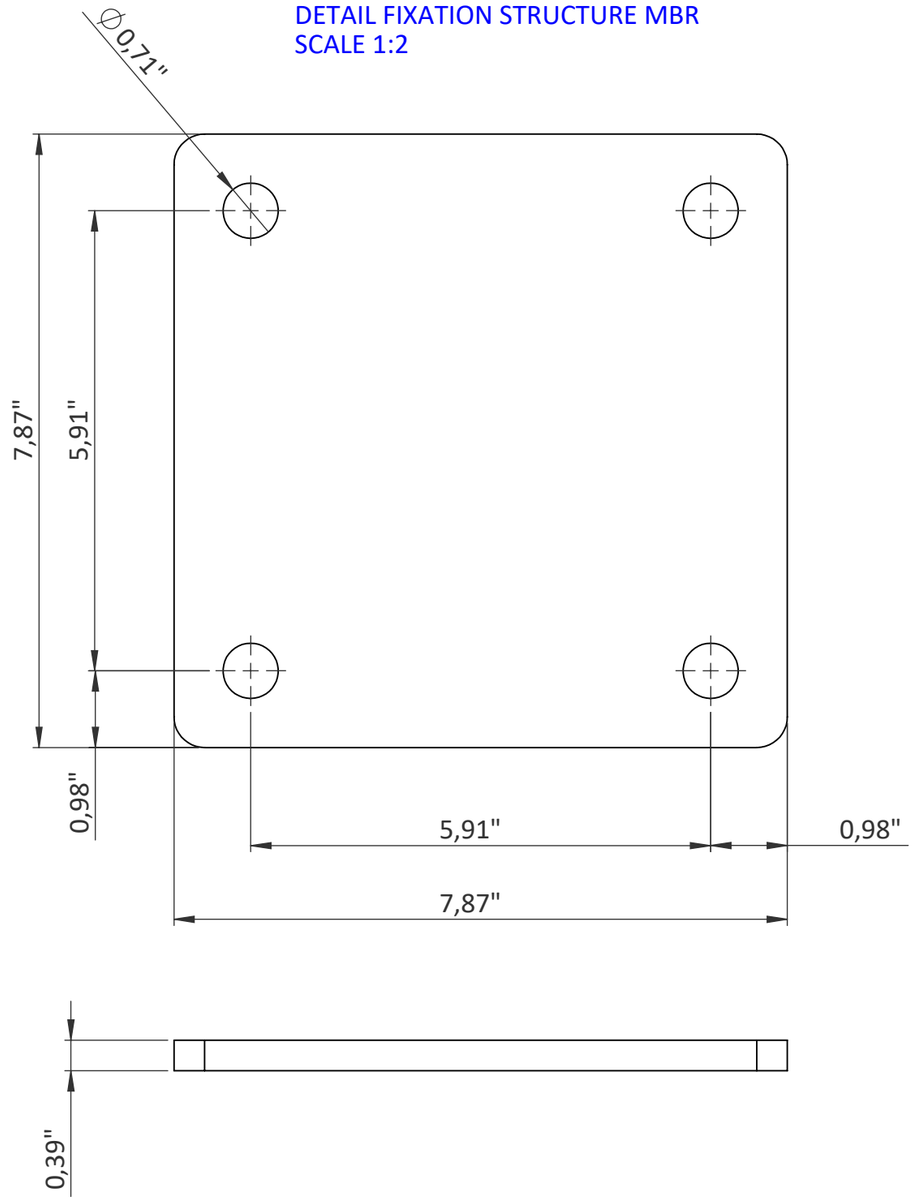

PROJECT: **HOSPITAL WWTP WHITERIVER**				SIGMADAF
DRAW: TS	DATE: 12/04/2025	REVISED: --	DATE:	DESCRIPTION: GENERAL ASSEMBLY
Dibujo confidencial propiedad de SIGMA GROUP. Uso restringido a personal y empresas autorizadas expresamente por SIGMA				
Confidential drawing owned by SIGMA GROUP. Use restricted to personnel and companies expressly authorized by SIGMA.				CODE: / REV: 02
Cotas en mm, tolerancias según: ISO 2768-1 clase m	Dimensions in mm, tolerances according to ISO 2768-1 class m	WEIGHT:	MATERIAL:	SCALE: - / PAGE 4 OF 4 / A3

SECTION 460754.09 – PACKAGE MBR SYSTEM-P&ID DRAWINGS-WWTP

PART 1 - PROCESS INSTRUMENTATION AND CONTROL DRAWINGS

PART 2 - NOT USED

PART 3 - NOT USED

END OF SECTION

HOSPITAL CAMPUS WWTP
WHITERIVER, AZ

DRAWING LIST

I-01	COVER SHEET
I-02	SYMBOLS & LEGEND 1
I-03	SYMBOLS & LEGEND 2
I-04	1300 - PRE ANOXIC TANK
I-05	1400 - PRE ANOXIC TANK
I-06	1500 - PRE ANOXIC TANK
I-07	1300 - PRE-AERATION TANK
I-08	1400 - PRE-AERATION TANK
I-09	1500 - PRE-AERATION TANK
I-10	1300 - POST ANOXIC TANK
I-11	1400 - POST ANOXIC TANK
I-12	1500 - POST ANOXIC TANK
I-13	1300 - FEED FORWARD PUMPS
I-14	1400 - FEED FORWARD PUMPS
I-15	1300 - FEED FORWARD PUMPS
I-16	1300 - MEMBRANE BIOREACTOR
I-17	1400 - MEMBRANE BIOREACTOR
I-18	1500 - MEMBRANE BIOREACTOR
I-19	1300 - MBR PERMEATE PUMPS
I-20	1400 - MBR PERMEATE PUMPS
I-21	1500 - MBR PERMEATE PUMPS
I-22	1300 - MBR BLOWERS
I-23	1400 - MBR BLOWERS
I-24	1500 - MBR BLOWERS
I-25	1300 - WASTE ACTIVATED SLUDGE
I-26	1400 - WASTE ACTIVATED SLUDGE
I-27	1500 - WASTE ACTIVATED SLUDGE
I-28	1300 - CIP SYSTEM
I-29	1400 - CIP SYSTEM
I-30	1500 - CIP SYSTEM
I-31	1300 - NaOH AND MICRO-C
I-32	1400 - NaOCI AND ALUM

For Earth, For Life
Kubota

KUBOTA Water & Environment USA Corp.
19910 North Creek Parkway S. Suite 100
Bothell, WA 98011 USA
Tel: +1 425 898 2858

REVISIONS			
REV	DESCRIPTION	DATE	APPROVED

DRAWN DRG	DATE 12/25
CHECKED –	DATE –
APPROVED –	DATE –
APPROVED –	DATE –

HOSPITAL WWTP
WHITERIVER, AZ
COVER SHEET

SIZE	CONTRACT NO.	DRAWING NO.	REV.
D	–	I–01	D

SCALE	SHEET NO.
N/A	1–of–32

EQUALIZATION

PUMP STATION

INSTRUMENT SYMBOL LABELS

ID
LOOP
CONTROL
LOCATION

INSTRUMENT & FUNCTION SYMBOLS

	FIELD ACCESSIBLE	FRONT MAIN ACCESSIBLE	FRONT AUX ACCESSIBLE	REAR MAIN INACCESSIBLE	
DISCRETE INSTRUMENT	ID LOOP CON LOC				
SHARED DISPLAY SHARED CONTROL	ID LOOP TOP BTM LOC				
COMPUTER FUNCTION	ID LOOP LOC				
PROGRAMMABLE LOGIC CONTROL	TOP ID LOOP BTM LOC				
PLC INPUT/OUTPUT	ANALOG INPUT	ANALOG OUTPUT	DISCRETE INPUT	DISCRETE OUTPUT	HARDWARE INTERLOCK

CONTROL ABBREVIATIONS

1/2	SELECT 1 OR 2 POSITION
A/M	REMOTE-MANUAL SETTING
AMSS	REMOTE-MANUAL-START-STOP FUNCTION
DO	DISSOLVED OXYGEN
ESTOP	EMERGENCY STOP
FAIL	FAILURE CONDITION
HOR	HAND-OFF-REMOTE
I/I	CURRENT TO CURRENT CONVERTER
I/P	CURRENT TO PNEUMATIC CONVERTER
LEL	LOWER EXPLOSIVE LIMIT
LOR	LOCAL-OFF-REMOTE
LOS	LOCK-OUT-STOP
LR	LOCAL-REMOTE
OC	OPEN-CLOSE
OCR	OPEN-CLOSE-REMOTE
OIL	LUBRICATING OR COOLING OIL
OIT	OPERATOR INTERFACE TERMINAL
ON	ON CONDITION
OPEN	OPEN CONDITION OR COMMAND
OSC	OPEN-STOP-CLOSE
RDY	READY CONDITION
RESET	RESET FAILURE
RUN	MAINTAINED RUN COMMAND
SP	SET POINT
SS	START-STOP
WND	MOTOR WINDING
BCN	BEACON
V/P	VOLTAGE TO PNEUMATIC CONVERTER
V/I	VOLTAGE TO CURRENT CONVERTER

GENERAL ABBREVIATIONS

AFD	ADJUSTABLE FREQUENCY DRIVE
AS	AIR SUPPLY
AXP	POST ANOXIC
BFV	BUTTERFLY VALVE
BV	BALL VALVE
CMPTR	COMPUTER
CS	CONSTANT SPEED
CTA	CITRIC ACID
CV	CHECK VALVE
DO	DISSOLVED OXYGEN
DR	DRAIN
DV	DIAPHRAGM VALVE
ES	ELECTRICAL SUPPLY
FC	FAIL CLOSED
FO	FAIL OPEN
FP	FIELD PANEL
GAL	GALLONS
GBV	GLOBAL VALVE
GND	GROUND
GV	GATE VALVE
HI	HIGH
HMI	HUMAN-MACHINE INTERFACE
I/O	INPUT/OUTPUT
INST	INSTRUMENT
KGV	KNIFE GATE VALVE
LCP	LOCAL CONTROL PANEL
MB	MBR BASIN
MBR	MEMBRANE BIOREACTOR
MCC	MOTOR CONTROL CENTER
MUX	TELEMETRY MULTIPLEXING
NC	NORMALLY CLOSED
NO	NORMALLY OPEN
NV	NEEDLE VALVE
OF	OVERFLOW
PA	PRE-AERATION
PAX	PRE-ANOXIC
PLC	PROGRAMMABLE LOGIC CONTROLLER
PRV	PRESSURE RELIEF VALVE
PT	PRESSURE TAG
PV	PLUG VALVE
PW	PLANT WATER
REQD	REQUIRED
RLS	RELEASE
RM	ROTOMETER
SB	SPLITTER BOX
SCADA	SUPERVISORY CONTROL AND DATA ACQUISITION
SH	SLUDGE HOLDING
SMU	SUBMERGED MEMBRANE UNIT
SP	SUMP PUMP
SWD	SIDE WATER DEPTH
TEMP	TEMPERATURE
TMP	TRANS MEMBRANE PRESSURE
TURB	TURBIDITY
TV	TELESCOPING VALVE
TYP	TYPICAL
UNO	UNLESS NOTED OTHERWISE
UPS	UNINTERRUTABLE POWER SUPPLY
V	VENT
VFD	VARIABLE FREQUENCY DRIVE
UV	ULTRA VIOLET
VS	VARIABLE SPEED

PROCESS ZONES

ZONE #	PROCESS DESCRIPTION
00	GENERAL
01	PUMP STATION
02	HEADWORKS
03	EQUALIZATION
04	DE-OX
05	ANAEROBIC
06	PRE-ANOXIC
07	SWING BASIN
08	PRE-AERATION
09	POST-ANOXIC
10	MEMBRANE BIOREACTOR
11	REACTIVATED SLUDGE
12	INTERNAL RECYCLE
13	PERMEATE COLLECTION
14	SCOUR AIR
15	PROCESS AIR
16	CLEAN IN PLACE
17	WASTE ACTIVATED SLUDGE
18	ULTRA VIOLET FILTRATION
19	CHEMICAL ADDITION
20	ANOXIC
99	PLC/SCADA

LINE SYMBOLS

	MAIN PROCESS FLOW
	MAIN PROCESS FLOW (EXISTING)
	SECONDARY PROCESS FLOW
	SECONDARY (EXISTING)
	NON PROCESS FLOW
	PNEUMATIC INSTRUMENT AIR
	ELECTRIC SIGNAL
	CAPILLARY TUBE
	SONIC SIGNAL (UNGUIDED)
	SOFTWARE OR DATA LINK
	MECHANICAL LINK
	HYDRAULIC
120V	POWER SUPPLY
SA	SERVICE AIR AUPPLY

EQUIPMENT LABELS

EQUIPMENT NUMBER

EQUIPMENT NAME

SPEC 01
SPEC 02
SPEC 03
SPEC 04

001–X–010101

CLIENT ZONE NUMBER — DEVICE — PROCESS ZONE — TRAIN — BASIN — INSTANCE

PIPE LINE NUMBER IDENTIFIER

X-MTL-FSA-000

X = PIPE SIZE
MTL = PIPE MATERIAL
FSA = FLOW STREAM ABBREVIATION
000 = INSTANCE NUMBER

VALVE NUMBER IDENTIFIER

X
TR-VA-PZ00

TR = TRAIN NUMBER
X = VALVE SIZE
VA = VALVE TYPE ABBREVIATION
PZ = PROCESS ZONE
000 = INSTANCE NUMBER

SHEET CONNECTION SYMBOLS

- FLOW STREAM ORIGIN/DESTINATION SHT XX.	PROCESS CONNECTION IN THIS CONTRACT
X = INSTANCE NUMBER	
FLOW STREAM ORIGIN/DESTINATION	PROCESS CONNECTION NOT IN THIS CONTRACT
FLOW STREAM ORIGIN/DESTINATION ORIGIN/DESTINATION	PROCESS CONNECTION NOT IN THIS CONTRACT OPTIONAL

FLOW PRIMARY ELEMENT SYMBOLS

	ORIFICE PLATE
	SINGLE PORT PITOT TUBE OR PITOT-VENTURI TUBE
	AVERAGING PITOT TUBE
T	THERMAL MASS FLOWMETER
M	MAGNETIC FLOWMETER
	TURBINE OR PROPELLER-TYPE PRIMARY ELEMENT
	ROTOMETER
	POSITIVE DISPLACEMENT TYPE FLOW TOTALIZING INDICATOR
	VORTEX SENSOR
	TARGET TYPE SENSOR
	VENTURI TUBE
	SONIC FLOWMETER
D	DENSITY METER

INSTRUMENT SYMBOL LABEL IDENTIFICATION

	FIRST LETTER		SUCCEEDING LETTERS		
	MEASURED OR INITIATING VARIABLE	MODIFIER	READOUT OR PASSIVE FUNCTION	OUTPUT FUNCTION	MODIFIER
A	ANALYSIS		ALARM		
B	BURNER,COMBUSTION		USER'S CHOICE	USER'S CHOICE	USER'S CHOICE
C	USER'S CHOICE			CONTROL	
D	DENSITY	DIFFERENTIAL			
E	VOLTAGE		SENSOR(PRIMARY ELEMENT)		
F	FLOW RATE	RATIO(FRACTION)			
G	USER'S CHOICE		GLASS,VIEWIG DEVIDE		
H	HAND				HIGH
I	CURRENT(ELECTRICAL)		INDICATE		
J	POWER	SCAN			
K	TIME,TIME SCHEDULE	TIME RATE OF CHANGE		CONTROL STATION	
L	LEVEL		LIGHT		LOW
M	MOISTURE	MOMENTARY			MIDDLE,INTERMEDIATE
N	USER'S CHOICE		USER'S CHOICE	USER'S CHOICE	USER'S CHOICE
O	USER'S CHOICE		ORIFICE,RESTRICTION		
P	PRESSURE,VACUUM		POINT(TEST) CONNECTION		
Q	QUANTITY	INTEGRATE,TOTALIZE			
R	RADIATION		RECORD		
S	SPEED,FREQUENCY	SAFETY		SWITCH	
T	TEMPERATURE			TRANSMIT	
U	MULTIVARIABLE		MULTIFUNCTION	MULTIFUNCTION	MULTIFUNCTION
V	VIBRATION,MECANICAL ANALYSIS			VALVE,DAMPER,OR LOUVER	
W	WEIGHT,FORCE		WELL		
X	UNCLASSIFIED	X AXIS	UNCLASSIFIED	UNCLASSIFIED	UNCLASSIFIED
Y	EVENT,STATE,PRESENCE	Y AXIS		RELAY,COMPUTE,CONVERT	
Z	POSITION,DIMENSION	Z AXIS		DRIVER,ACTUATOR, UNCLASSIFIED,FINAL CONTROL ELEMENT	

FLOW STREAM ABBREVIATIONS

CAS	CAUSTIC SODA
CIP	CLEAN IN PLACE
CTA	CITRIC ACID
FF	FEED FORWARD
INF	INFLUENT
IR	INTERNAL RECYCLE
MCRC	MICRO-C
NaOH	SODIUM HYDROXIDE
PA	PROCESS AIIR
PRM	PERMEATE
PW	PLANT WATER
RAS	RETURN ACTIVATED SLUDGE
SCA	SCOUR AIR
SHC	SODIUM HYPOCHLORITE
WAS	WASTE ACTIVATED SLUDGE

GENERAL NOTES:

NOTE 1: CONTROL FAIL ALARM. FOR TROUBLESHOOTING, CHECK FIELD SWITCHES, MCC, PROTECTION MODULE, LOCAL CP AND/OR WIRES.

NOTE 2: SEE EXAMPLE MOTOR CONTROL SCHEMATIC FOR DETAIL. ADD ETHERNET SWITCH WITH AUX I/O AS REQUIRED. HARD WIRES ARE RECOMMENDED FOR RUN COMMAND AND SPEED COMMAND FROM MBR PLC.

NOTE 3: STANDARD BRAY MODEL IS ASSUMED FOR ALL MODULATING AND ON/OFF VALVES EXCEPT FOR DEGAS VALVES. MODIFY BASED ON FINAL ACTUATOR SELECTION. PERMEATE FLOW ON/OFF AND MODULATING VALVES FOR GRAVITY FILTRATION SHALL HAVE BACK-UP POWER TO STOP GRAVITY FLOW DURING POWER LOSS.

NOTE 4: APPLY TRANSPARENT PIPE WITH 3" MIN. ON EACH PERMEATE PIPE BRANCH FOR GRAVITY FILTRATION WITH SUBMERGED PIPING.

NOTE 5: PUMP MONITOR RELAY. REFER MANUFACTURER SUBMITTAL FOR DETAIL.

For Earth, For Life
Kubota

KUBOTA Water & Environment USA Corp.
19910 North Creek Parkway S. Suite 100
Bothell, WA 98011 USA
Tel; +1 425 898 2858

REVISIONS

REV	DESCRIPTION	DATE	APPROVED

DRAWN DRG	DATE 12/25	HOSPITAL WWTP WHITERIVER, AZ SYMBOLS & LEGEND	
CHECKED –	DATE –		
APPROVED –	DATE –	SIZE D / CONTRACT NO. – / DRAWING NO. I–02	REV. D
APPROVED –	DATE –	SCALE N/A	SHEET NO. 2–of–32

VALVE SYMBOLS

NORMALLY OPEN	NORMALLY CLOSED	3-WAY	
			GATE VALVE
			GLOBE VALVE
X" BV-XX	X" BV-XX	X" BV-XX	BALL VALVE
X" PV-XX	X" PV-XX		PLUG VALVE
BF-XX			BUTTERFLY VALVE
			DIAPHRAGM VALVE
X" CV-XX			CHECK VALVE
NV-XX			NEEDLE VALVE
			KNIFE GATE VALVE
			PRESSURE RELIEF VALVE
PI			PRESSURE REDUCING REGULATING VALVE. SELF-CONTAINED
X" V-XX			BACK PRESSURE REGULATING VALVE. SELF-CONTAINED

VALVE OPERATOR SYMBOLS

	DIAPHRAGM, SPRING
	DIAPHRAGM, PRESSURE BALANCED
	HANDWHEEL
M	MOTOR
	CYLINDER
S	SOLENOID

MECHANICAL EQUIPMENT & PIPING SYMBOLS

	SUBMERSIBLE PUMP		INLET FILTER		WEIR		INJECTOR		FLOW DIRECTION ARROW
	SUBMERSIBLE PUMP WITH GUIDE RAIL		INLET SILENCER / FILTER		SLIDE GATE		FLEXIBLE HOSE		LINE CROSS PRIMARY PROCESS
	DRY SUMP PUMP		AIR COMPRESSOR		WALL MOUNT MIXER		TANK VENT		LINE CROSS SECONDARY PROCESS
	CENTRIFUGAL PUMP		BUBBLE TRAP		MIXER	DR	DRAIN	BY OTHERS BY KBT	SCOPE OR SPEC BREAK
	METERING PUMP		CHEMICAL STORAGE TOTE		INVENT MIXER		PIPE UNION		55 GALLON DRUM
	ROTARY LOBE PUMP		CHEMICAL STORAGE TANK		TELESCOPING VALVE		FLANGE		SILENCER
	DIAPHRAGM PUMP		ROTARY SIEVE DRUM SCREEN		ELECTRIC MOTOR		BLIND FLANGE		
	PARISTALTIC PUMP		ROTARY DRUM SCREEN		SAFETY SHOWER		REDUCER		
	POSITIVE DISPLACEMENT PUMP		WASHER CONVEYOR		ROLLER BIN		Y-STRAINER		
	PROGRESSIVE CAVITY PUMP		SMU SINGLE WITH CA		HOSE CONNECTION		PIPE CAP OR PLUG		
	AIR LIFT PUMP		SMU SINGLE 2 MNFD		RUPTURE DISK		PIPE WELD CAP		
	CENTRIFUGAL BLOWER		SMU DOUBLE WITH CA		DIAPHRAGM SEAL		PIPE EXPANSION JOINT		
	ROTARY BLOWER		SMU SINGLE WITHOUT CA		FLOW STRAIGHTENING VANE				
	ROTARY SCREW BLOWER		SMU DOUBLE WITHOUT CA		INLINE MIXER				

For Earth, For Life
Kubota

KUBOTA Water & Environment USA Corp.
19910 North Creek Parkway S. Suite 100
Bothell, WA 98011 USA
Tel: +1 425 898 2858

REVISIONS			
REV	DESCRIPTION	DATE	APPROVED

DRAWN DRG	DATE 12/25
CHECKED –	DATE –
APPROVED –	DATE –
APPROVED –	DATE –

HOSPITAL WWTP
WHITERIVER, AZ
SYMBOLS & LEGEND

SIZE	CONTRACT NO.	DRAWING NO.	REV.
D	–	I-03	D

SCALE N/A | SHEET NO. 3-of-32

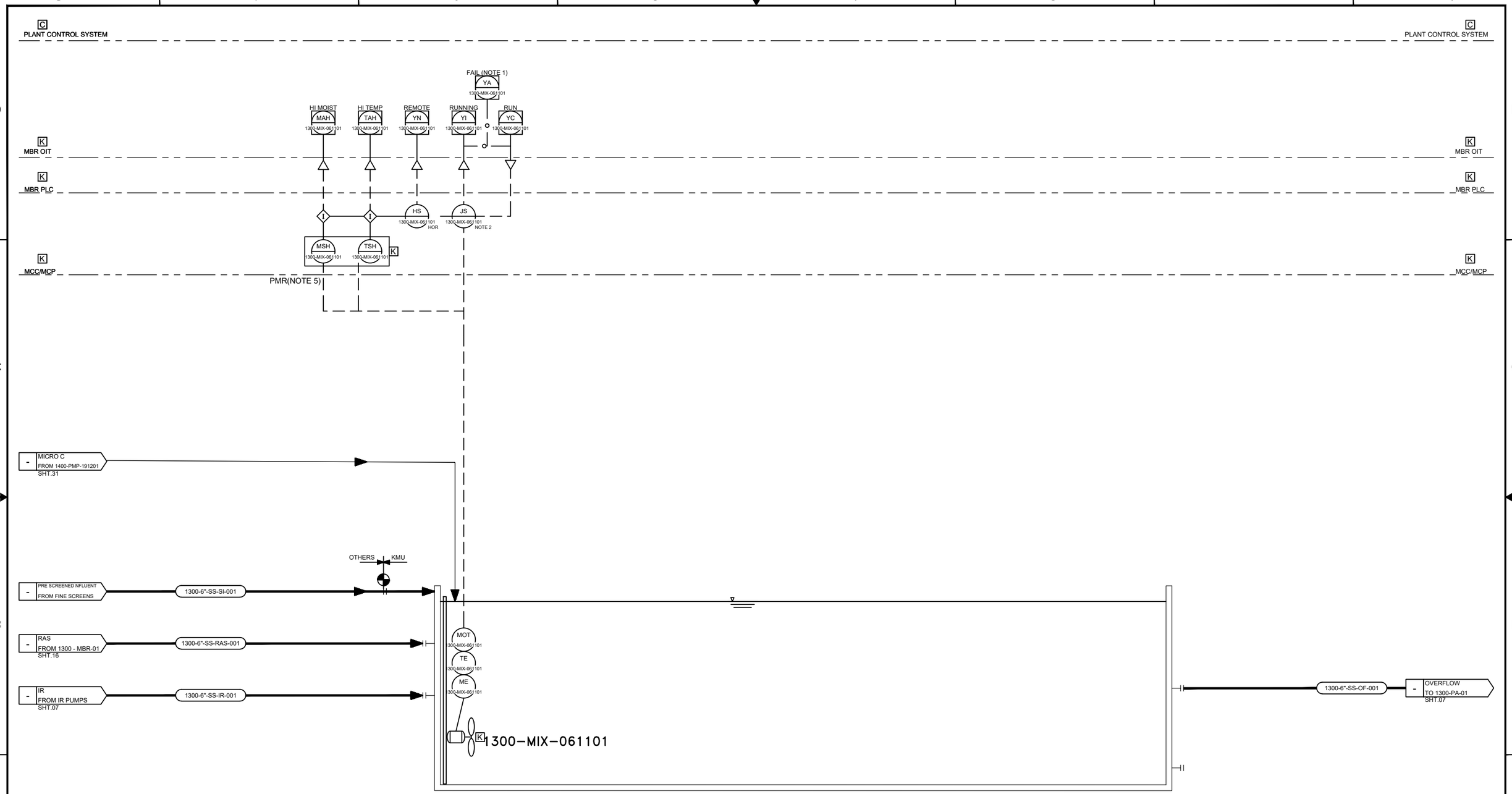

K PROVIDED BY KUBOTA

C PROVIDED BY OTHERS/CONTRACTOR

For Earth, For Life
Kubota

KUBOTA Water & Environment USA Corp.
19910 North Creek Parkway S. Suite 100
Bothell, WA 98011 USA
Tel: +1 425 898 2858

REVISIONS			
REV	DESCRIPTION	DATE	APPROVED

DRAWN DRG	DATE 12/25	HOSPITAL WWTP WHITERIVER, AZ 1300–PRE ANOXIC BASIN	
CHECKED –	DATE –		
APPROVED –	DATE –	SIZE D	CONTRACT NO. –
APPROVED –	DATE –	SCALE N/A	DRAWING NO. I–04
			REV. D
			SHEET NO. 4–of–32

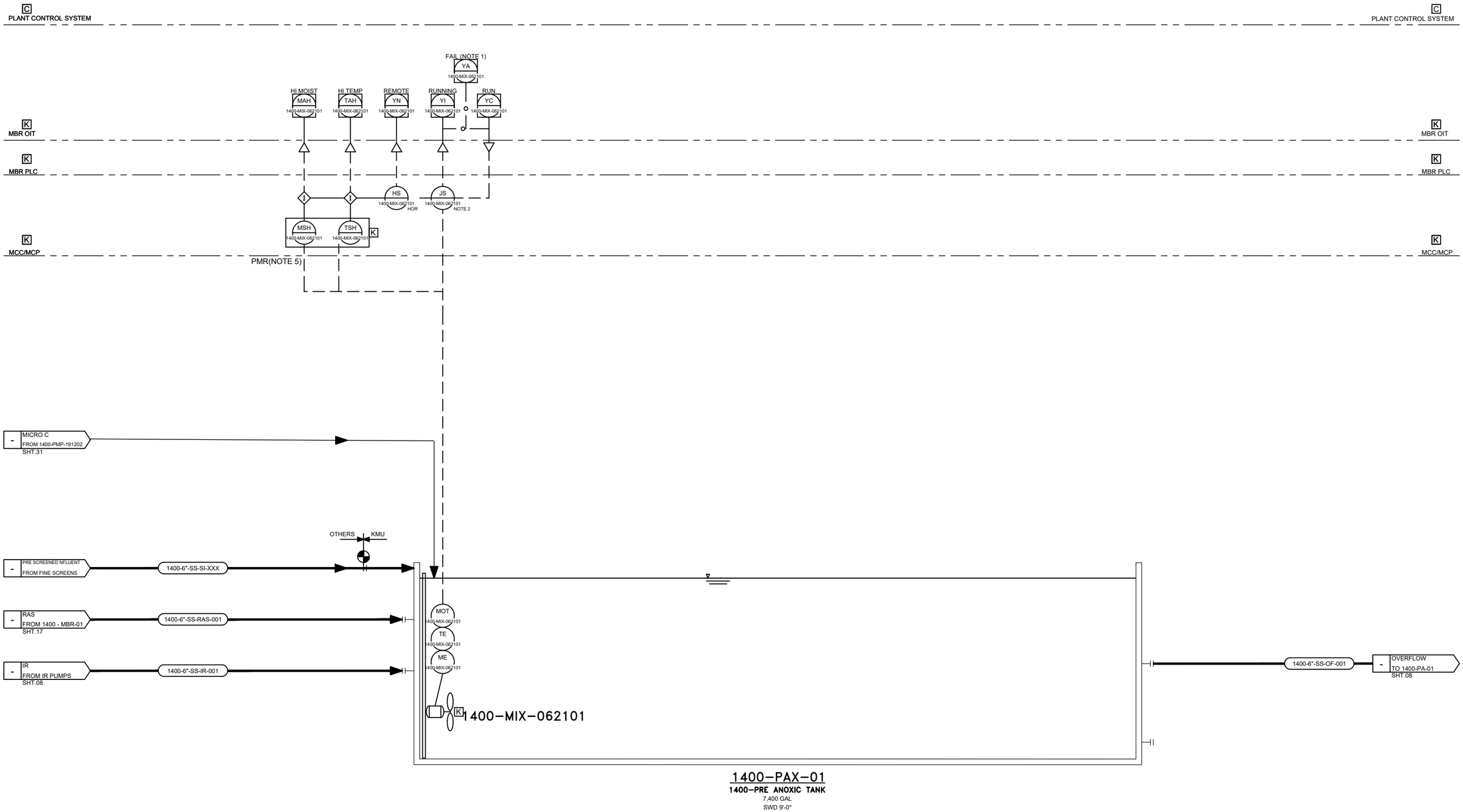

K PROVIDED BY KUBOTA

C PROVIDED BY OTHERS/CONTRACTOR

For Earth, For Life
Kubota

KUBOTA Water & Environment USA Corp.
19910 North Creek Parkway S. Suite 100
Bothell, WA 98011 USA
Tel: +1 425 898 2858

REVISIONS			
REV	DESCRIPTION	DATE	APPROVED

DRAWN DRG	DATE 12/25	HOSPITAL WWTP WHITERIVER, AZ 1400–PRE ANOXIC BASIN	
CHECKED –	DATE –		
APPROVED –	DATE –	SIZE D / CONTRACT NO. – / DRAWING NO. I–05	REV. D
APPROVED –	DATE –	SCALE N/A	SHEET NO. 5–of–32

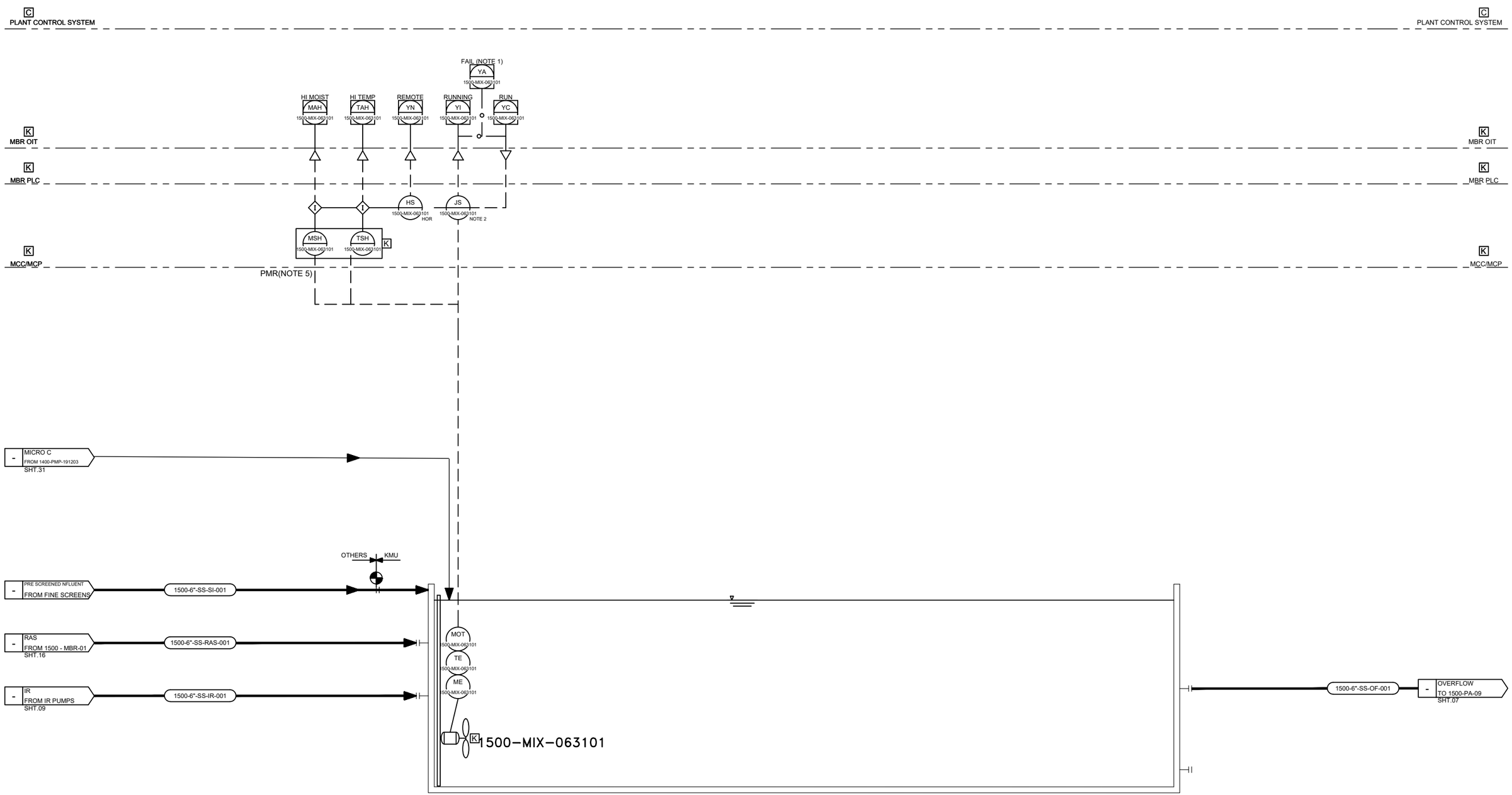

K PROVIDED BY KUBOTA

C PROVIDED BY OTHERS/CONTRACTOR

For Earth, For Life
Kubota

KUBOTA Water & Environment USA Corp.
19910 North Creek Parkway S. Suite 100
Bothell, WA 98011 USA
Tel: +1 425 898 2858

REVISIONS			
REV	DESCRIPTION	DATE	APPROVED

DRAWN DRG	DATE 12/25	HOSPITAL WWTP WHITERIVER, AZ 1500–PRE ANOXIC BASIN	
CHECKED –	DATE –		
APPROVED –	DATE –	SIZE D	CONTRACT NO. –
APPROVED –	DATE –	SCALE N/A	DRAWING NO. I–06
			REV. D
			SHEET NO. 6–of–32

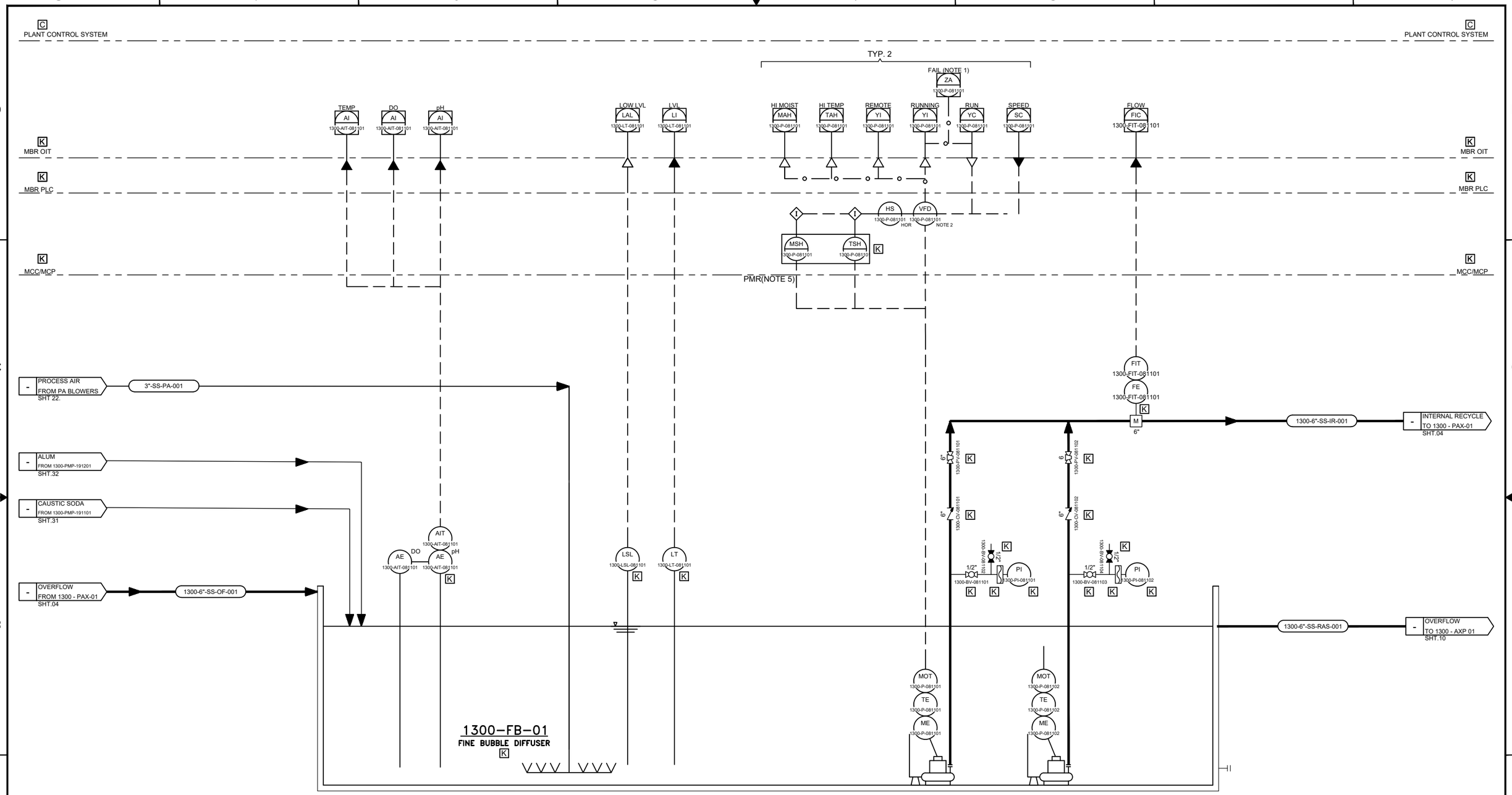

K PROVIDED BY KUBOTA

C PROVIDED BY OTHERS/CONTRACTOR

For Earth, For Life
Kubota

KUBOTA Water & Environment USA Corp.
19910 North Creek Parkway S. Suite 100
Bothell, WA 98011 USA
Tel: +1 425 898 2858

REVISIONS			
REV	DESCRIPTION	DATE	APPROVED

DRAWN DRG	DATE 12/25	HOSPITAL WWTP WHITERIVER, AZ 1300–PRE AERATION BASIN	
CHECKED –	DATE –		
APPROVED –	DATE –	SIZE D / CONTRACT NO. – / DRAWING NO. I–07	REV. D
APPROVED –	DATE –	SCALE N/A	SHEET NO. 7–of–32

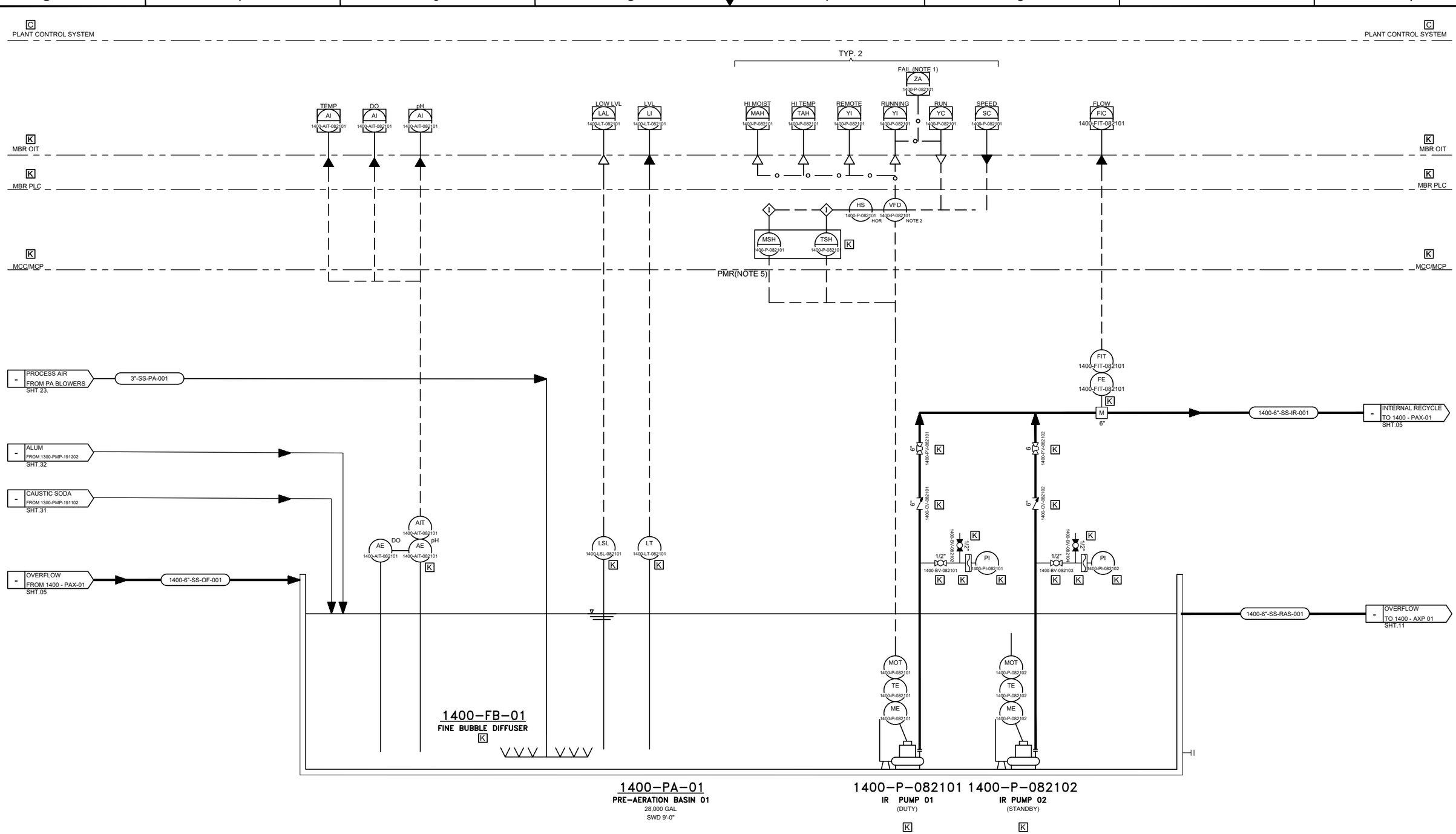

K PROVIDED BY KUBOTA

C PROVIDED BY OTHERS/CONTRACTOR

For Earth, For Life
Kubota

KUBOTA Water & Environment USA Corp.
19910 North Creek Parkway S. Suite 100
Bothell, WA 98011 USA
Tel: +1 425 898 2858

REVISIONS			
REV	DESCRIPTION	DATE	APPROVED

DRAWN DRG	DATE 12/25	HOSPITAL WWTP WHITERIVER, AZ 1400–PRE AERATION BASIN	
CHECKED –	DATE –		
APPROVED –	DATE –	SIZE D	CONTRACT NO. –	DRAWING NO. I–08	REV. D
APPROVED –	DATE –	SCALE N/A	SHEET NO. 8–of–32

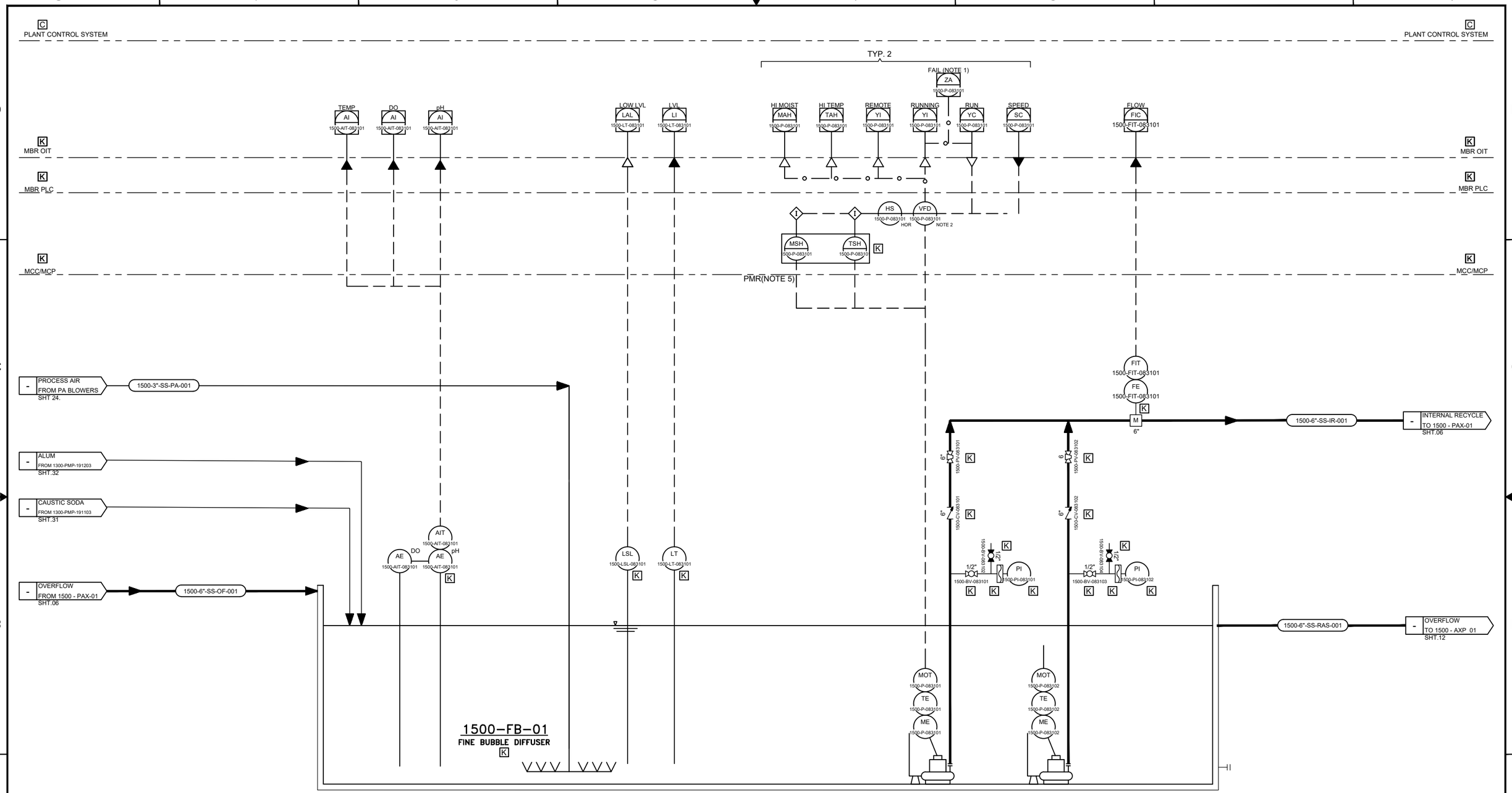

K PROVIDED BY KUBOTA

C PROVIDED BY OTHERS/CONTRACTOR

For Earth, For Life
Kubota

KUBOTA Water & Environment USA Corp.
19910 North Creek Parkway S. Suite 100
Bothell, WA 98011 USA
Tel: +1 425 898 2858

REVISIONS			
REV	DESCRIPTION	DATE	APPROVED

DRAWN DRG	DATE 12/25	HOSPITAL WWTP WHITERIVER, AZ 1500–PRE AERATION BASIN	
CHECKED –	DATE –		
APPROVED –	DATE –	SIZE D / CONTRACT NO. – / DRAWING NO. I–09	REV. D
APPROVED –	DATE –	SCALE N/A	SHEET NO. 9–of–32

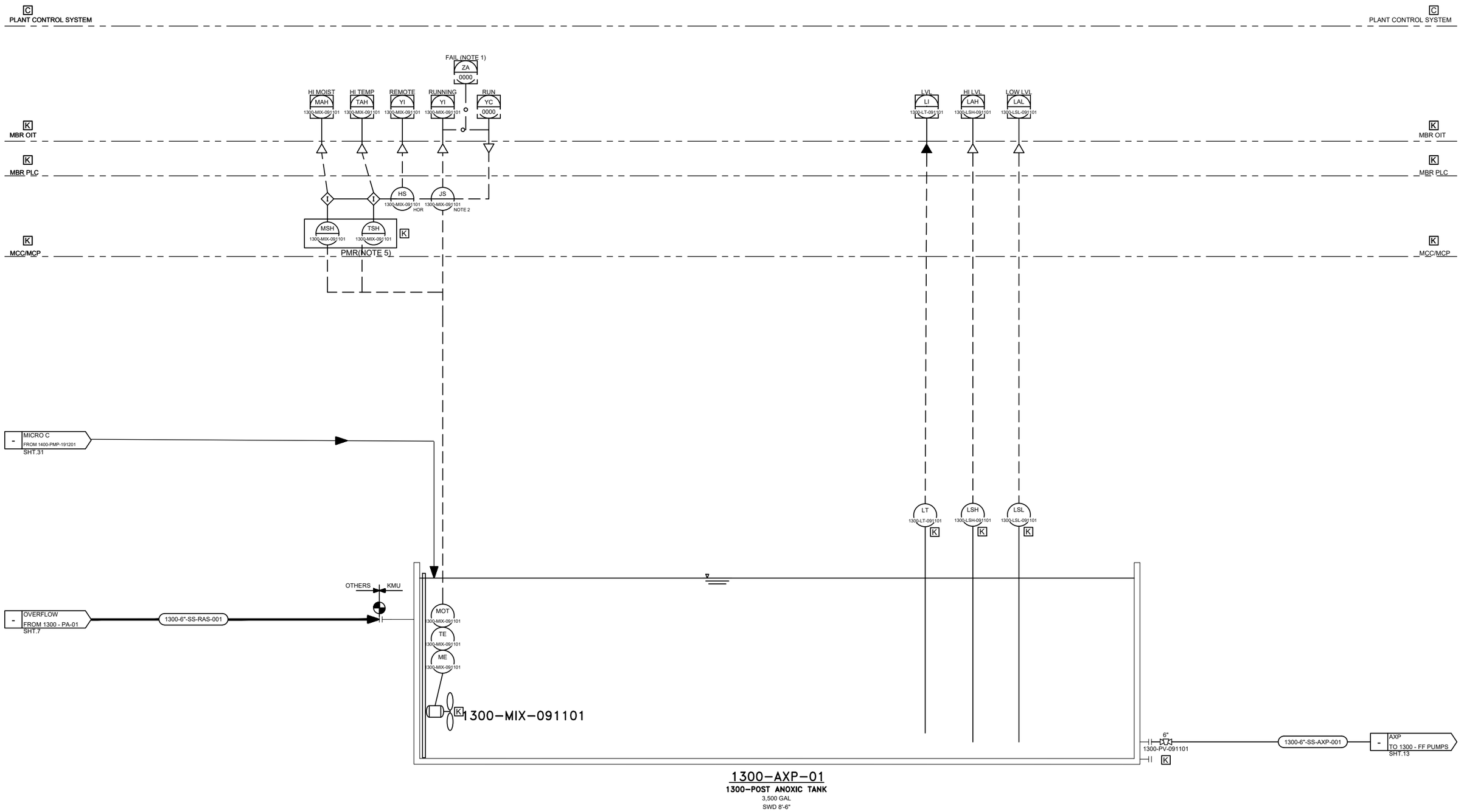

K PROVIDED BY KUBOTA

C PROVIDED BY OTHERS/CONTRACTOR

For Earth, For Life
Kubota

KUBOTA Water & Environment USA Corp.
19910 North Creek Parkway S. Suite 100
Bothell, WA 98011 USA
Tel: +1 425 898 2858

REVISIONS			
REV	DESCRIPTION	DATE	APPROVED

DRAWN DRG	DATE 12/25	HOSPITAL WWTP WHITERIVER, AZ 1300–POST ANOXIC TANK	
CHECKED –	DATE –		
APPROVED –	DATE –	SIZE D / CONTRACT NO. – / DRAWING NO. I–10	REV. D
APPROVED –	DATE –	SCALE N/A	SHEET NO. 10–of–32

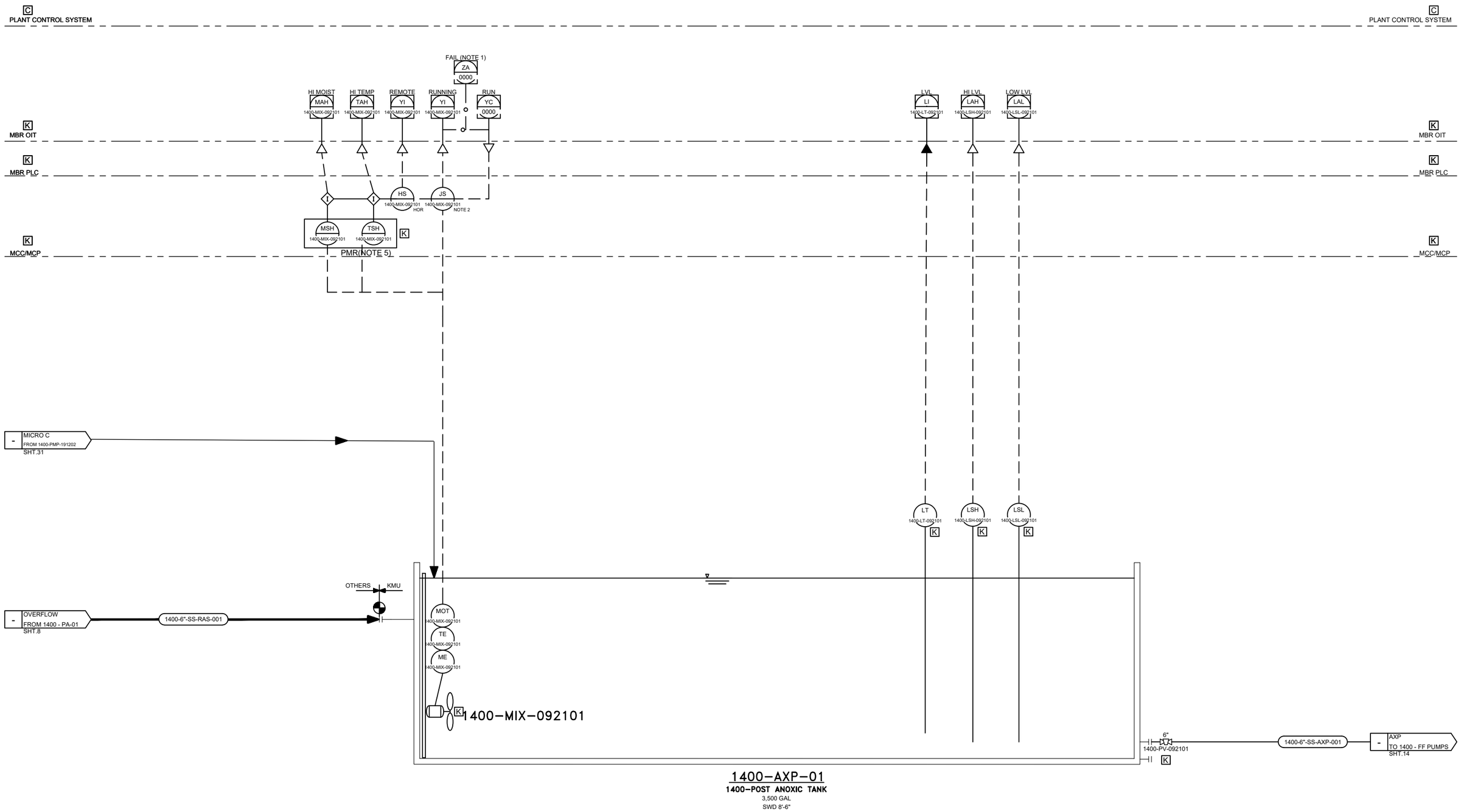

K PROVIDED BY KUBOTA

C PROVIDED BY OTHERS/CONTRACTOR

For Earth, For Life
Kubota

KUBOTA Water & Environment USA Corp.
19910 North Creek Parkway S. Suite 100
Bothell, WA 98011 USA
Tel: +1 425 898 2858

REVISIONS			
REV	DESCRIPTION	DATE	APPROVED

DRAWN DRG	DATE 12/25	HOSPITAL WWTP WHITERIVER, AZ 1400–POST ANOXIC TANK	
CHECKED –	DATE –		
APPROVED –	DATE –	SIZE D / CONTRACT NO. – / DRAWING NO. I–11	REV. D
APPROVED –	DATE –	SCALE N/A	SHEET NO. 11–of–32

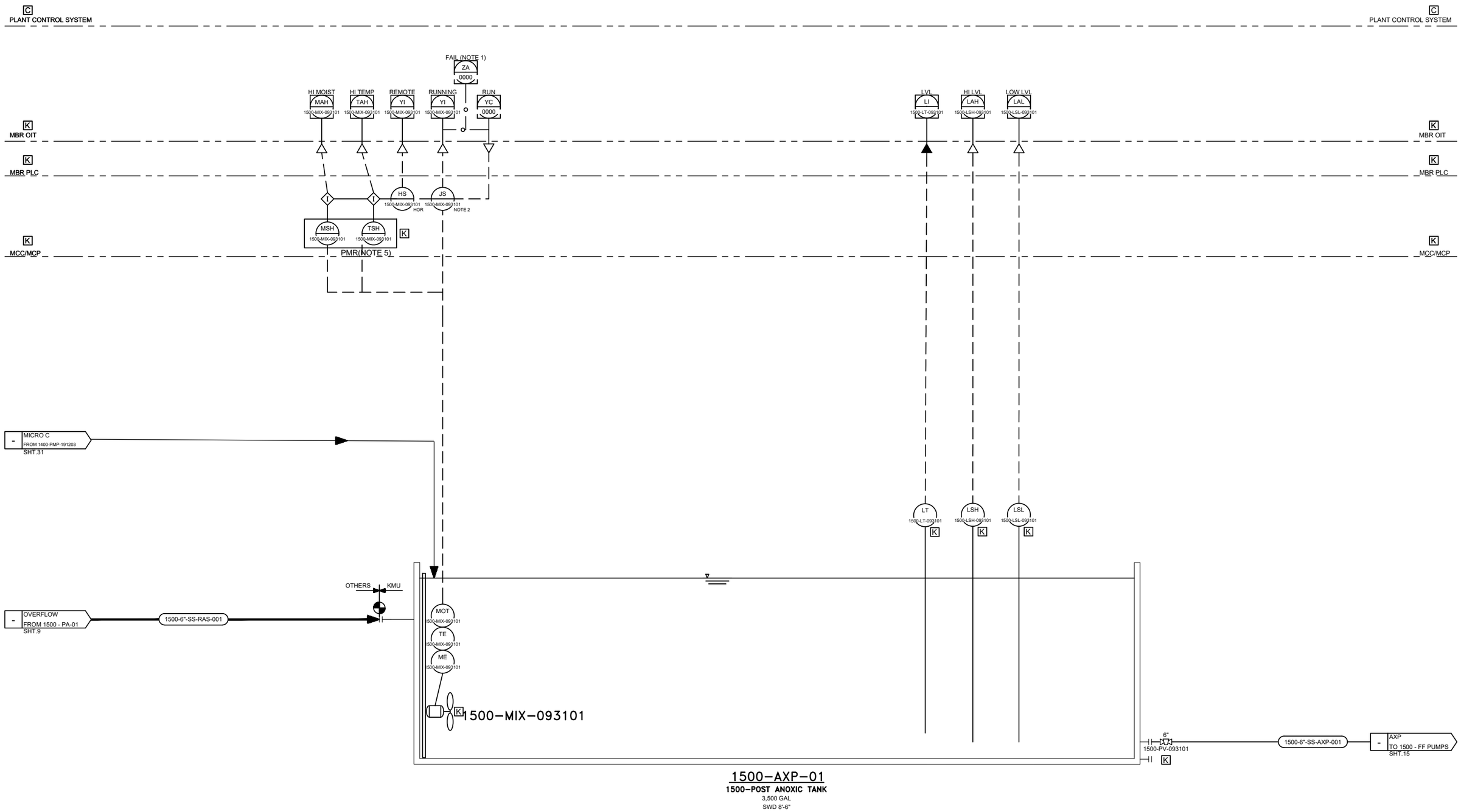

K PROVIDED BY KUBOTA

C PROVIDED BY OTHERS/CONTRACTOR

For Earth, For Life
Kubota

KUBOTA Water & Environment USA Corp.
19910 North Creek Parkway S. Suite 100
Bothell, WA 98011 USA
Tel: +1 425 888 2858

REVISIONS			
REV	DESCRIPTION	DATE	APPROVED

DRAWN DRG	DATE 12/25	HOSPITAL WWTP WHITERIVER, AZ 1500–POST ANOXIC TANK	
CHECKED –	DATE –		
APPROVED –	DATE –	SIZE D / CONTRACT NO. – / DRAWING NO. I–12	REV. D
APPROVED –	DATE –	SCALE N/A	SHEET NO. 12–of–32

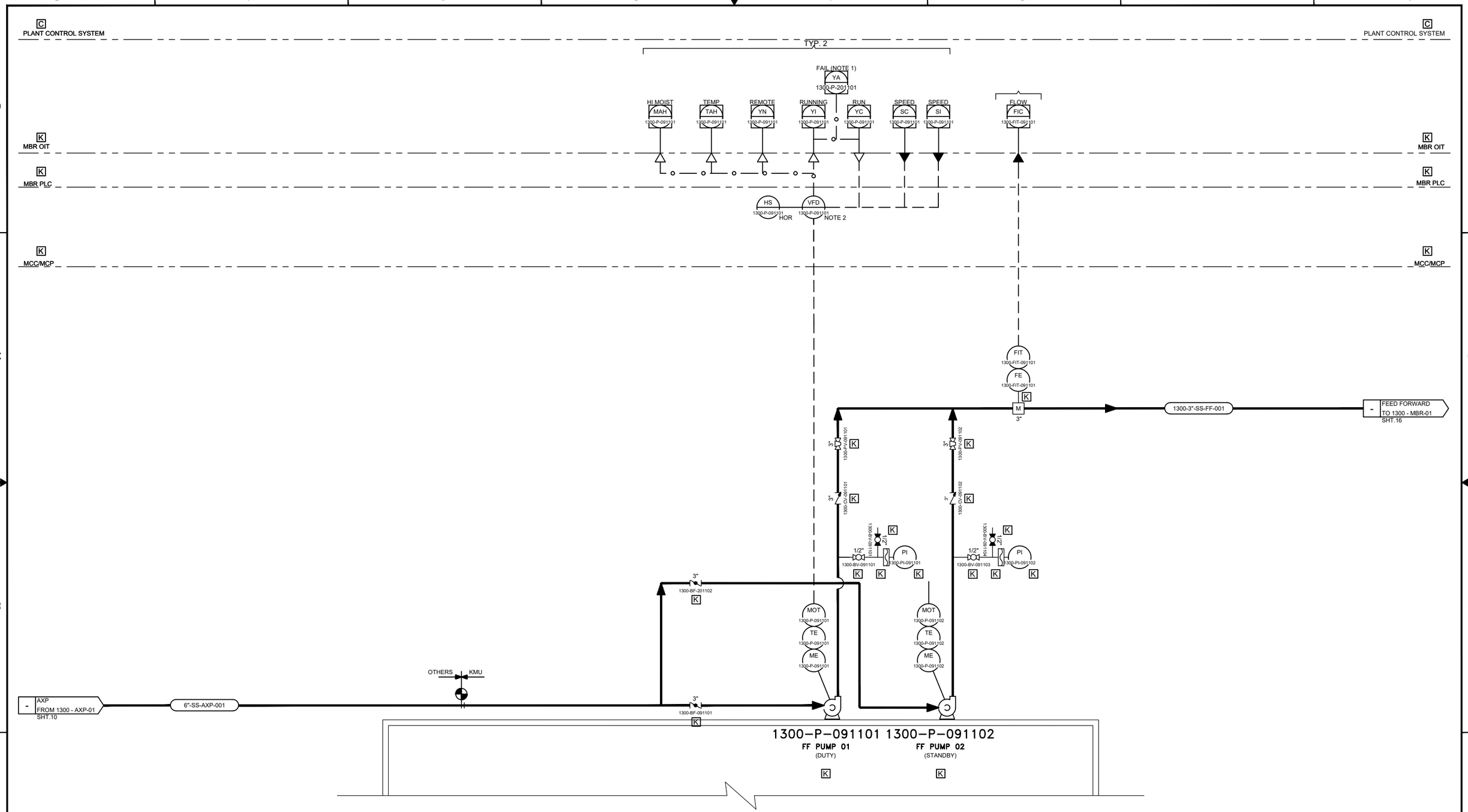

K PROVIDED BY KUBOTA

C PROVIDED BY OTHERS/CONTRACTOR

For Earth, For Life
Kubota

KUBOTA Water & Environment USA Corp.
19910 North Creek Parkway S. Suite 100
Bothell, WA 98011 USA
Tel: +1 425 898 2858

REVISIONS			
REV	DESCRIPTION	DATE	APPROVED

DRAWN DRG	DATE 12/25	HOSPITAL WWTP WHITERIVER, AZ 1300–FEED FORWARD PUMPS	
CHECKED –	DATE –		
APPROVED –	DATE –	SIZE D / CONTRACT NO. – / DRAWING NO. I–13	REV. D
APPROVED –	DATE –	SCALE N/A	SHEET NO. 13–of–32

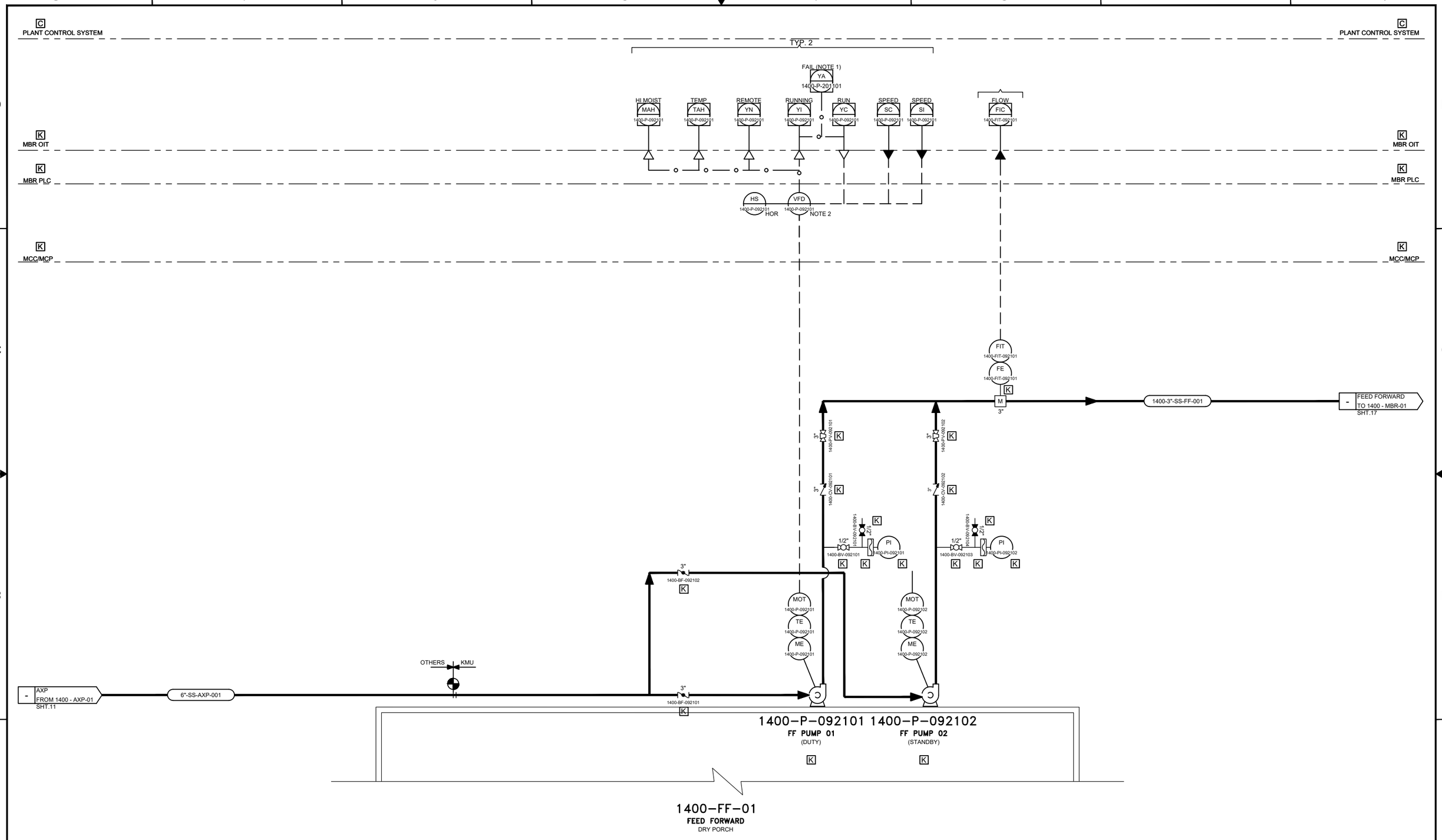

K PROVIDED BY KUBOTA

C PROVIDED BY OTHERS/CONTRACTOR

For Earth, For Life
Kubota

KUBOTA Water & Environment USA Corp.
19910 North Creek Parkway S. Suite 100
Bothell, WA 98011 USA
Tel: +1 425 898 2858

REVISIONS			
REV	DESCRIPTION	DATE	APPROVED

DRAWN DRG	DATE 12/25		
CHECKED –	DATE –		
APPROVED –	DATE –		
APPROVED –	DATE –		

HOSPITAL WWTP
WHITERIVER, AZ
1400–FEED FORWARD PUMPS

SIZE	CONTRACT NO.	DRAWING NO.	REV.
D	–	I–14	D

SCALE	SHEET NO.
N/A	14–of–32

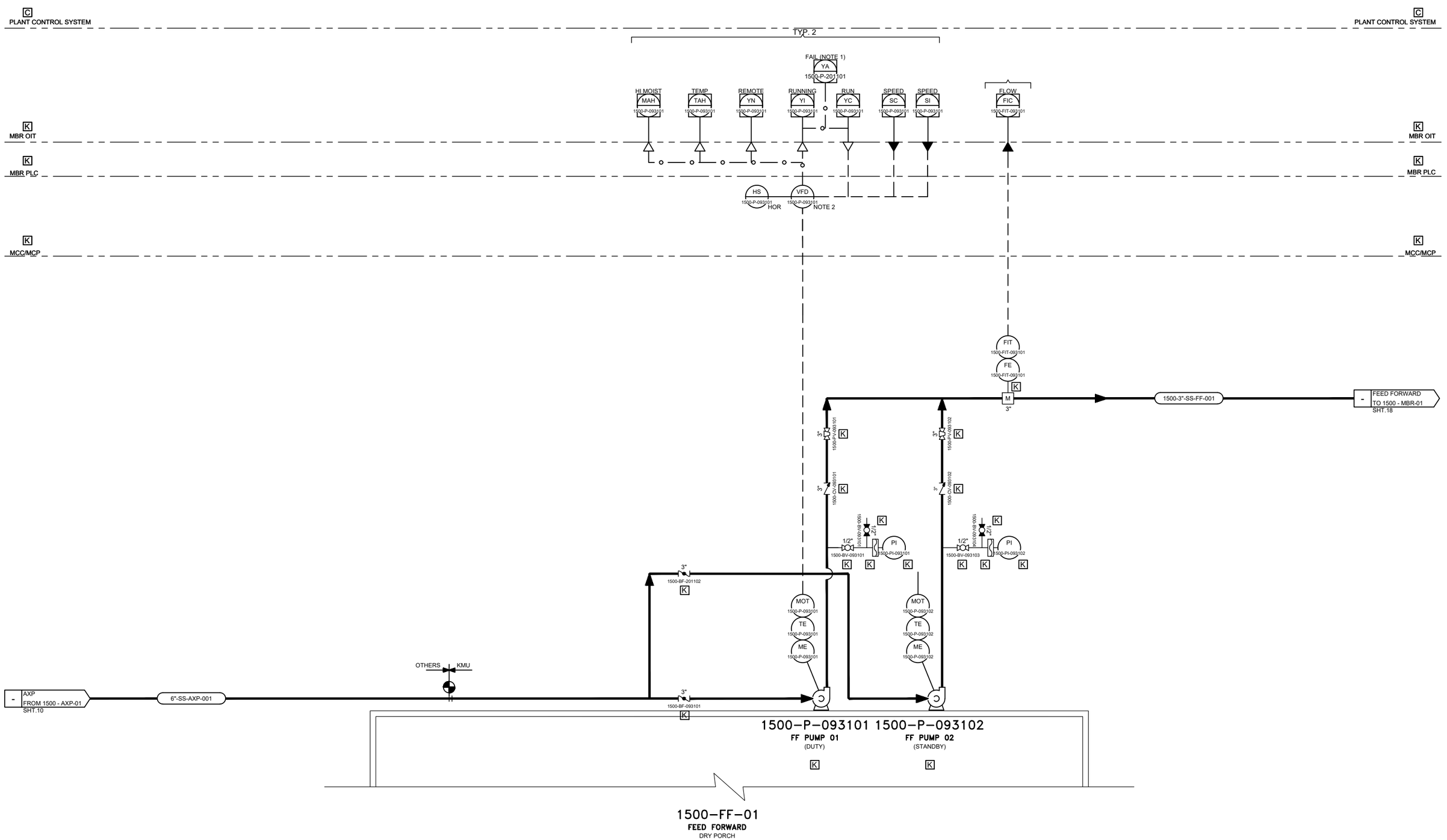

K PROVIDED BY KUBOTA

C PROVIDED BY OTHERS/CONTRACTOR

For Earth, For Life
Kubota

KUBOTA Water & Environment USA Corp.
19910 North Creek Parkway S. Suite 100
Bothell, WA 98011 USA
Tel: +1 425 898 2858

REVISIONS			
REV	DESCRIPTION	DATE	APPROVED

DRAWN DRG	DATE 12/25		
CHECKED –	DATE –		
APPROVED –	DATE –		
APPROVED –	DATE –		

HOSPITAL WWTP
WHITERIVER, AZ
1500–FEED FORWARD PUMPS

SIZE	CONTRACT NO.	DRAWING NO.	REV.
D	–	I–15	D

SCALE	SHEET NO.
N/A	15–of–32

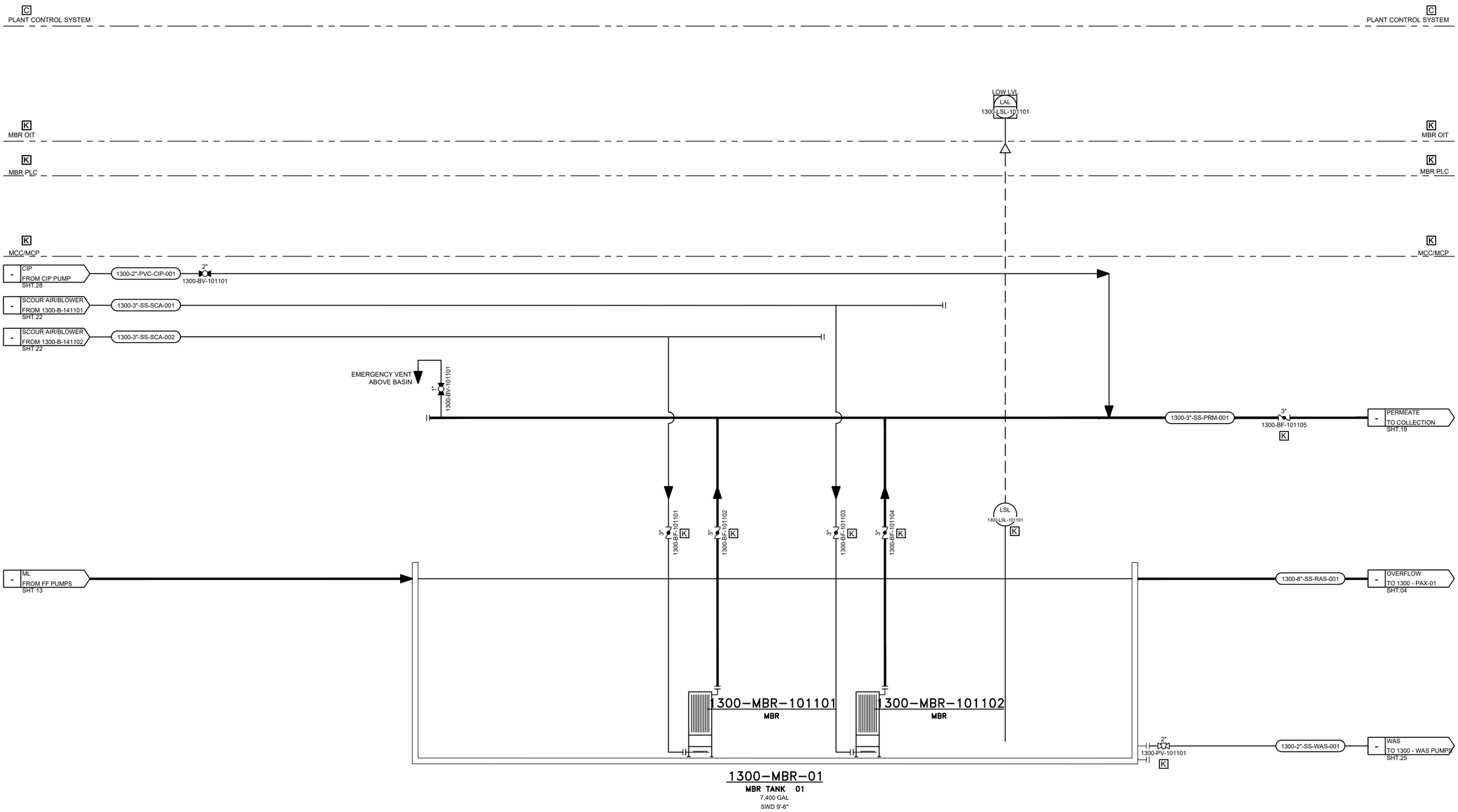

K PROVIDED BY KUBOTA

C PROVIDED BY OTHERS/CONTRACTOR

For Earth, For Life
Kubota

KUBOTA Water & Environment USA Corp.
19910 North Creek Parkway S. Suite 100
Bothell, WA 98011 USA
Tel: +1 425 888 2858

REVISIONS			
REV	DESCRIPTION	DATE	APPROVED

DRAWN DRG	DATE 12/25	HOSPITAL WWTP WHITERIVER, AZ 1300–MEMBRANE BIOREACTOR	
CHECKED –	DATE –		
APPROVED –	DATE –	SIZE D / CONTRACT NO. – / DRAWING NO. I–16	REV. D
APPROVED –	DATE –	SCALE N/A	SHEET NO. 16–of–32

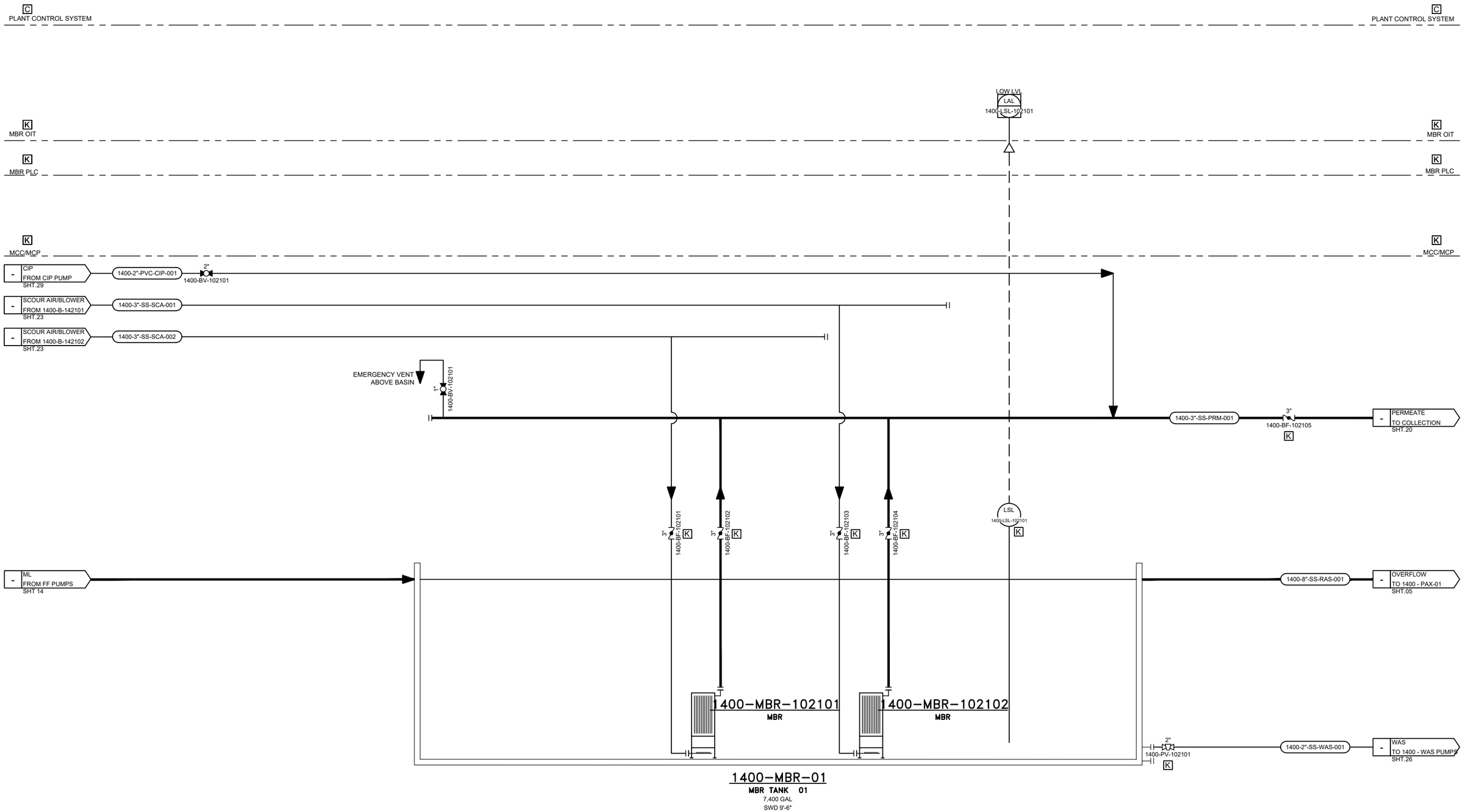

K PROVIDED BY KUBOTA

C PROVIDED BY OTHERS/CONTRACTOR

For Earth, For Life
Kubota

KUBOTA Water & Environment USA Corp.
19910 North Creek Parkway S. Suite 100
Bothell, WA 98011 USA
Tel: +1 425 898 2858

REVISIONS			
REV	DESCRIPTION	DATE	APPROVED

DRAWN DRG	DATE 12/25	HOSPITAL WWTP WHITERIVER, AZ 1400–MEMBRANE BIOREACTOR	
CHECKED –	DATE –		
APPROVED –	DATE –	SIZE D	CONTRACT NO. –
APPROVED –	DATE –	DRAWING NO. I–17	REV. D
SCALE N/A		SHEET NO. 17–of–32	

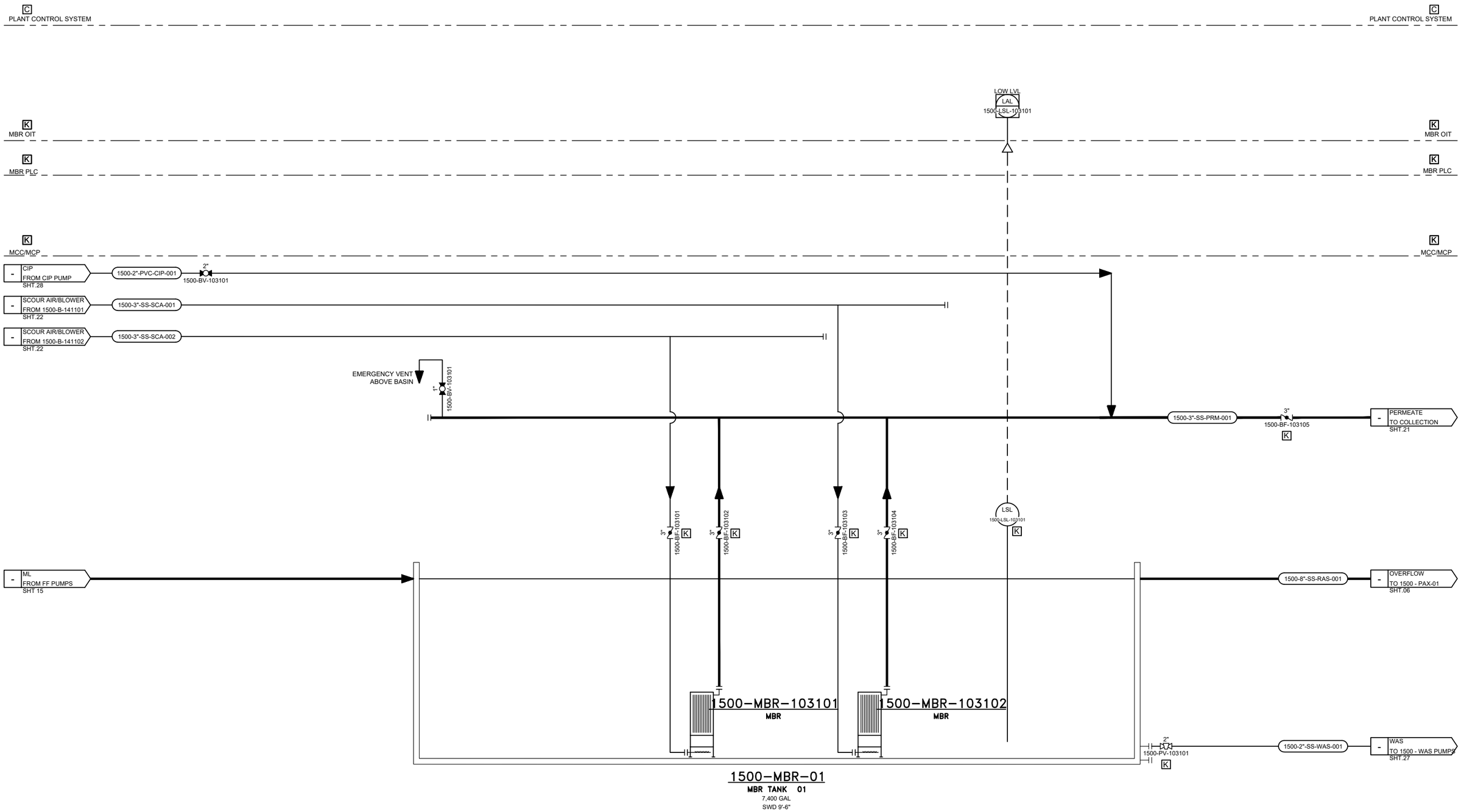

K PROVIDED BY KUBOTA

C PROVIDED BY OTHERS/CONTRACTOR

For Earth, For Life
Kubota

KUBOTA Water & Environment USA Corp.
19910 North Creek Parkway S. Suite 100
Bothell, WA 98011 USA
Tel: +1 425 898 2858

REVISIONS			
REV	DESCRIPTION	DATE	APPROVED

DRAWN DRG	DATE 12/25	HOSPITAL WWTP WHITERIVER, AZ 1500–MEMBRANE BIOREACTOR	
CHECKED –	DATE –		
APPROVED –	DATE –	SIZE D / CONTRACT NO. – / DRAWING NO. I–18	REV. D
APPROVED –	DATE –	SCALE N/A	SHEET NO. 18–of–32

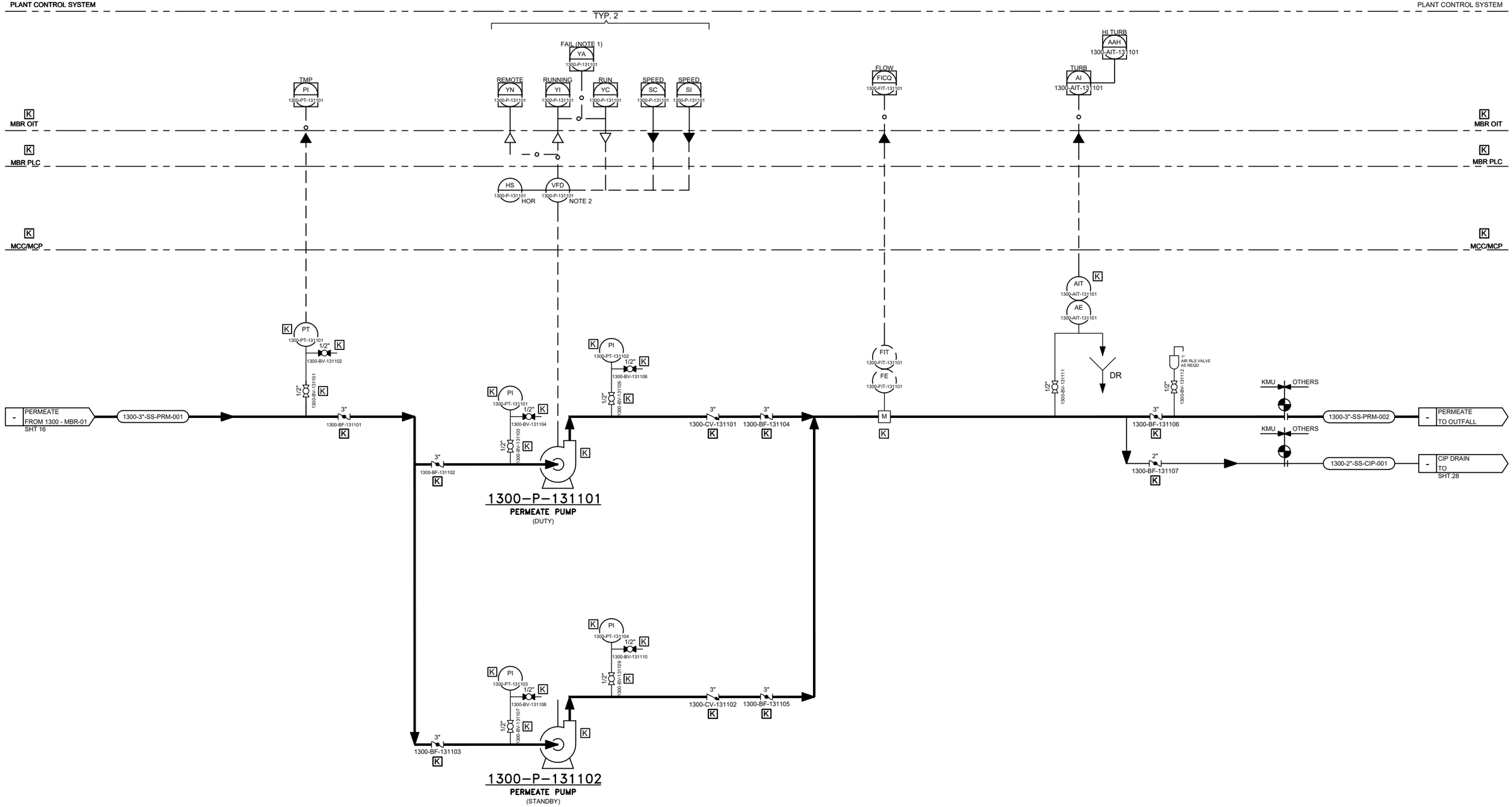

K PROVIDED BY KUBOTA

C PROVIDED BY OTHERS/CONTRACTOR

For Earth, For Life
Kubota

KUBOTA Water & Environment USA Corp.
19910 North Creek Parkway S. Suite 100
Bothell, WA 98011 USA
Tel: +1 425 898 2858

REVISIONS			
REV	DESCRIPTION	DATE	APPROVED

DRAWN DRG	DATE 12/25	HOSPITAL WWTP WHITERIVER, AZ 1300–MBR PERMEATE PUMPS	
CHECKED –	DATE –		
APPROVED –	DATE –	SIZE D	CONTRACT NO. –
APPROVED –	DATE –	DRAWING NO. I–19	REV. D
SCALE N/A		SHEET NO. 19–of–32	

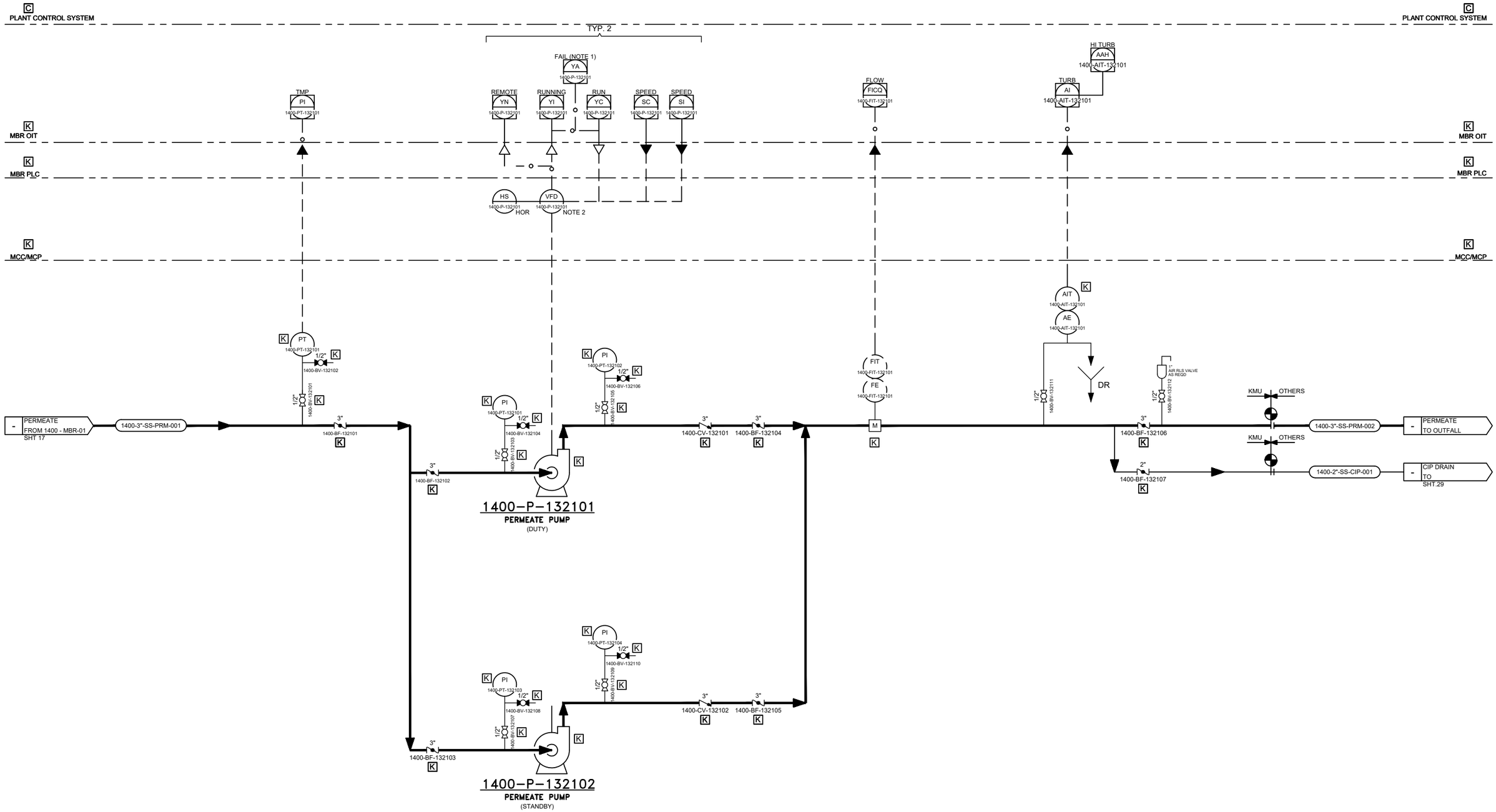

K PROVIDED BY KUBOTA

C PROVIDED BY OTHERS/CONTRACTOR

For Earth, For Life
Kubota

KUBOTA Water & Environment USA Corp.
19910 North Creek Parkway S. Suite 100
Bothell, WA 98011 USA
Tel: +1 425 898 2858

REVISIONS			
REV	DESCRIPTION	DATE	APPROVED

DRAWN DRG	DATE 12/25	HOSPITAL WWTP WHITERIVER, AZ 1400–MBR PERMEATE PUMPS	
CHECKED –	DATE –		
APPROVED –	DATE –	SIZE D	CONTRACT NO. –
APPROVED –	DATE –	DRAWING NO. I–20	REV. D
		SCALE N/A	SHEET NO. 20–of–32

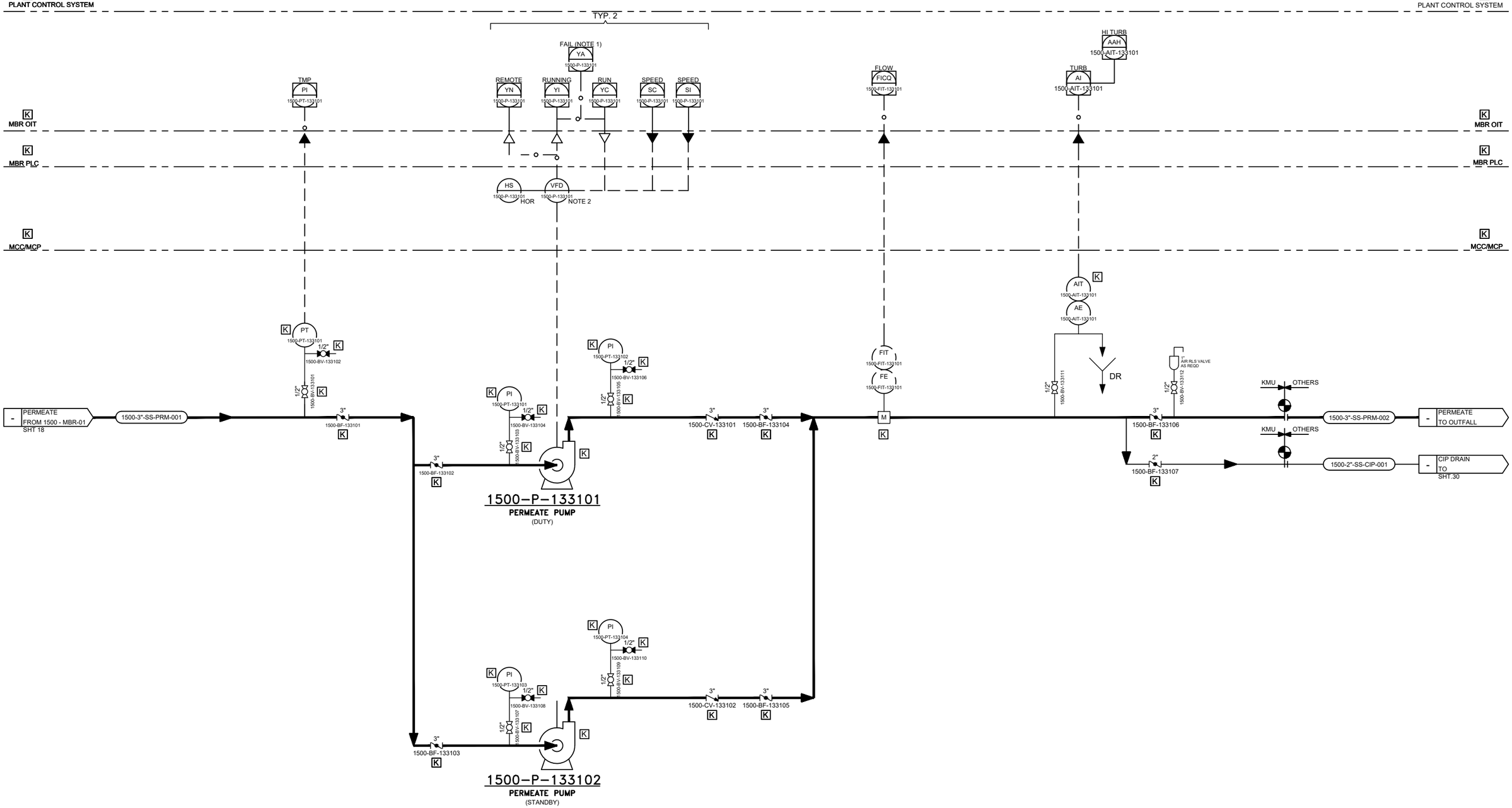

K PROVIDED BY KUBOTA

C PROVIDED BY OTHERS/CONTRACTOR

For Earth, For Life
Kubota

KUBOTA Water & Environment USA Corp.
19910 North Creek Parkway S. Suite 100
Bothell, WA 98011 USA
Tel: +1 425 898 2858

REVISIONS			
REV	DESCRIPTION	DATE	APPROVED

DRAWN DRG	DATE 12/25	HOSPITAL WWTP WHITERIVER, AZ 1500–MBR PERMEATE PUMPS	
CHECKED –	DATE –		
APPROVED –	DATE –	SIZE D	CONTRACT NO. –
APPROVED –	DATE –	DRAWING NO. I–21	REV. D
SCALE N/A		SHEET NO. 21–of–32	

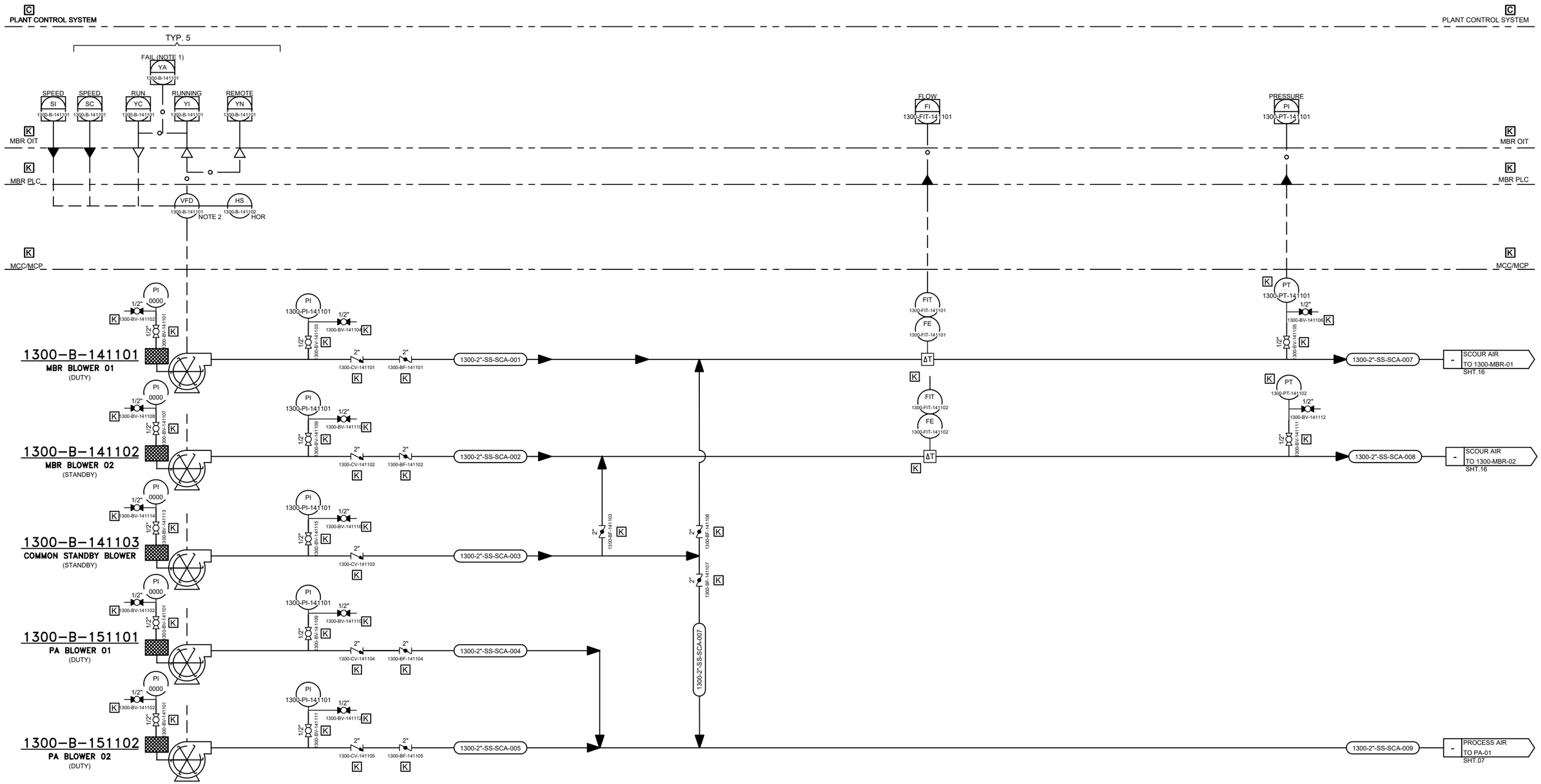

K PROVIDED BY KUBOTA

C PROVIDED BY OTHERS/CONTRACTOR

For Earth, For Life
Kubota

KUBOTA Water & Environment USA Corp.
19910 North Creek Parkway S. Suite 100
Bothell, WA 98011 USA
Tel: +1 425 898 2856

REVISIONS			
REV	DESCRIPTION	DATE	APPROVED

DRAWN DRG	DATE 12/25	HOSPITAL WWTP WHITERIVER, AZ 1300–MBR BLOWERS	
CHECKED –	DATE –		
APPROVED –	DATE –	SIZE D / CONTRACT NO. – / DRAWING NO. I–22	REV. D
APPROVED –	DATE –	SCALE N/A	SHEET NO. 22–of–32

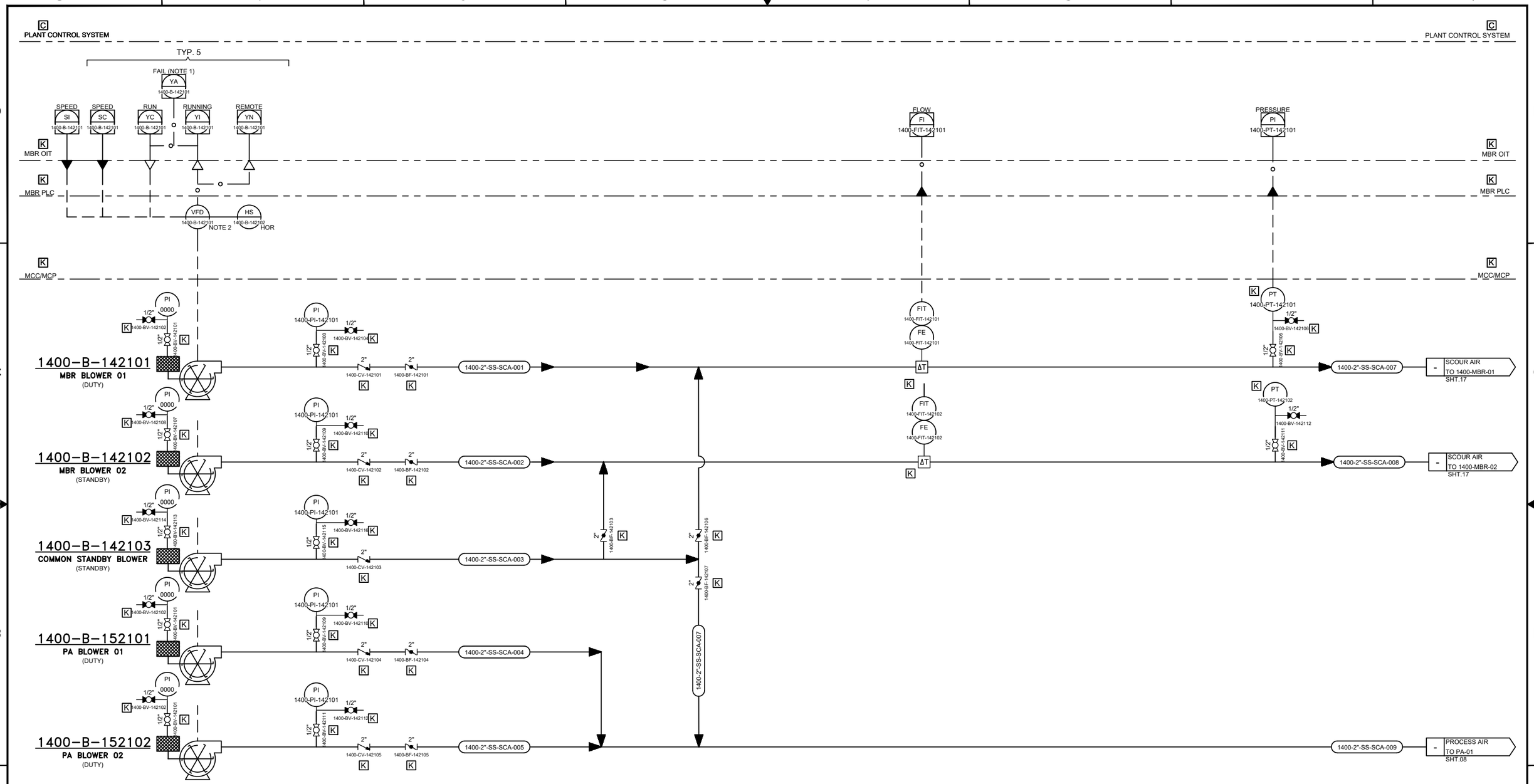

K PROVIDED BY KUBOTA

C PROVIDED BY OTHERS/CONTRACTOR

For Earth, For Life
Kubota

KUBOTA Water & Environment USA Corp.
19910 North Creek Parkway S. Suite 100
Bothell, WA 98011 USA
Tel: +1 425 898 2858

REVISIONS			
REV	DESCRIPTION	DATE	APPROVED

DRAWN DRG	DATE 12/25	HOSPITAL WWTP WHITERIVER, AZ 1400–MBR BLOWERS	
CHECKED –	DATE –		
APPROVED –	DATE –	SIZE D / CONTRACT NO. – / DRAWING NO. I–23	REV. D
APPROVED –	DATE –	SCALE N/A	SHEET NO. 23–of–32

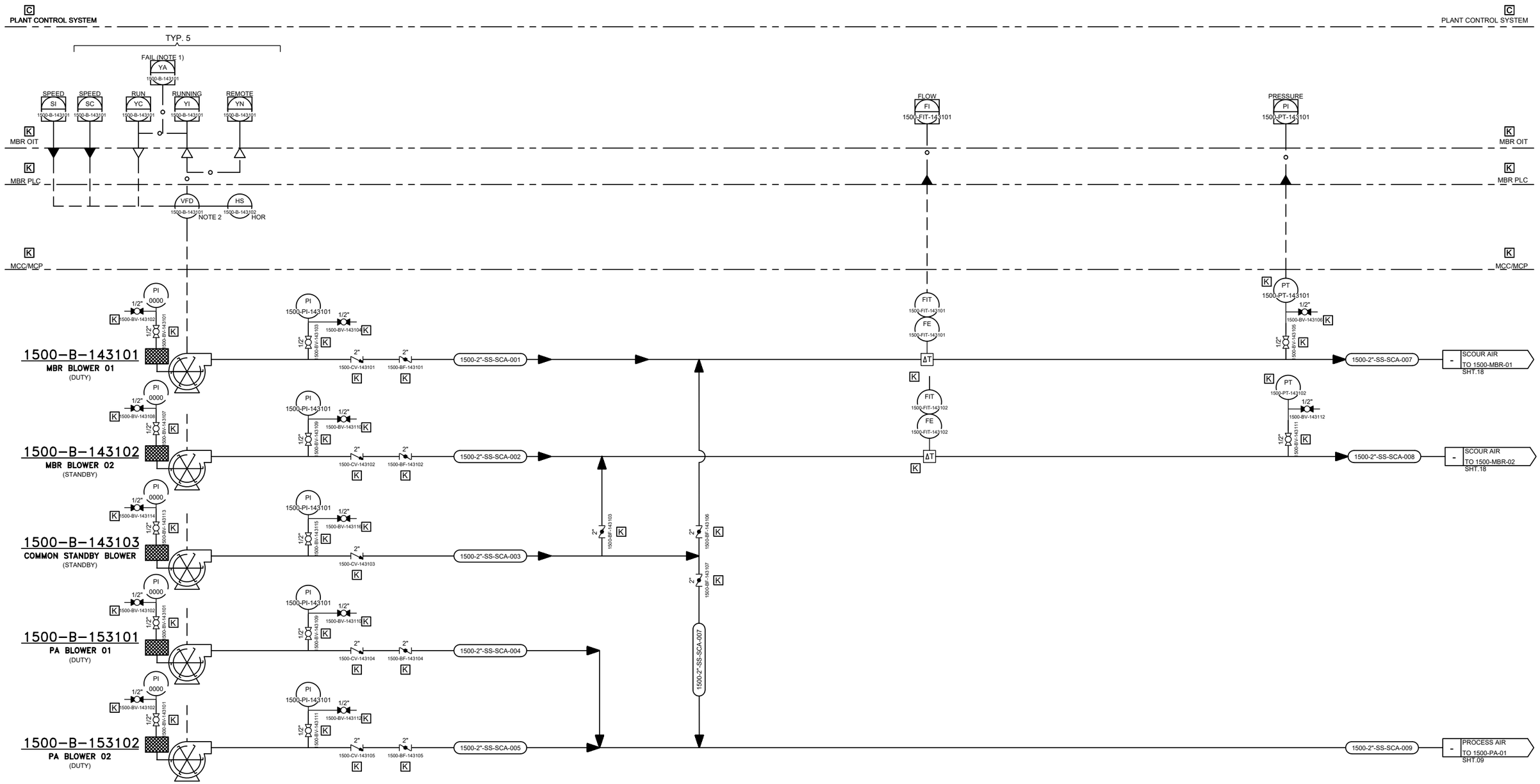

K PROVIDED BY KUBOTA

C PROVIDED BY OTHERS/CONTRACTOR

For Earth, For Life
Kubota

KUBOTA Water & Environment USA Corp.
19910 North Creek Parkway S. Suite 100
Bothell, WA 98011 USA
Tel: +1 425 898 2858

REVISIONS			
REV	DESCRIPTION	DATE	APPROVED

DRAWN DRG	DATE 12/25	HOSPITAL WWTP WHITERIVER, AZ 1500–MBR BLOWERS	
CHECKED –	DATE –		
APPROVED –	DATE –	SIZE D / CONTRACT NO. – / DRAWING NO. I–24	REV. D
APPROVED –	DATE –	SCALE N/A	SHEET NO. 24–of–32

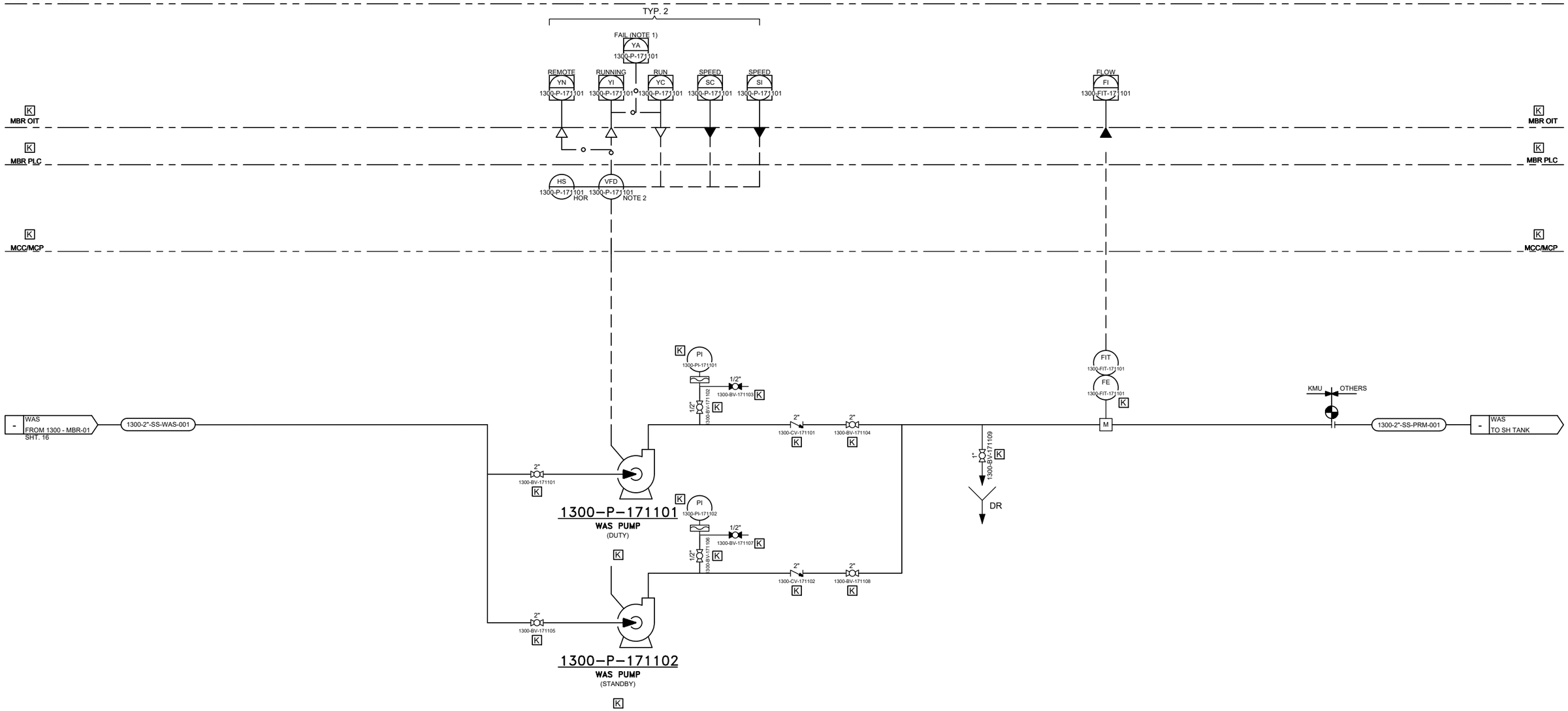

For Earth, For Life
Kubota

KUBOTA Water & Environment USA Corp.
19910 North Creek Parkway S. Suite 100
Bothell, WA 98011 USA
Tel: +1 425 898 2858

REVISIONS			
REV	DESCRIPTION	DATE	APPROVED

DRAWN DRG	DATE 12/25	HOSPITAL WWTP WHITERIVER, AZ 1300–WASTE ACTIVATED SLUDGE	
CHECKED –	DATE –		
APPROVED –	DATE –	SIZE D / CONTRACT NO. – / DRAWING NO. I–25	REV. D
APPROVED –	DATE –	SCALE N/A	SHEET NO. 25–of–32

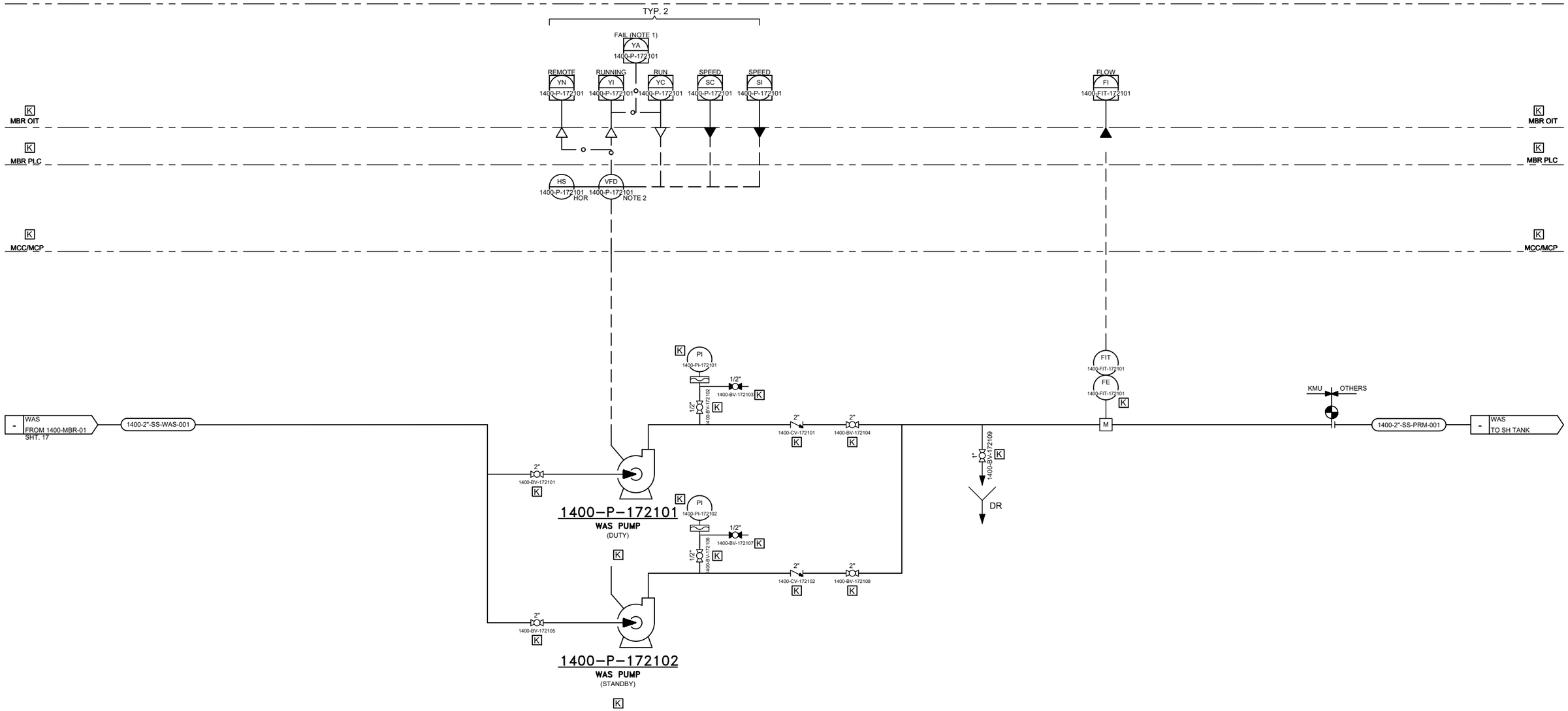

For Earth, For Life
Kubota

KUBOTA Water & Environment USA Corp.
19910 North Creek Parkway S. Suite 100
Bothell, WA 98011 USA
Tel: +1 425 898 2858

REVISIONS			
REV	DESCRIPTION	DATE	APPROVED

DRAWN DRG	DATE 12/25	HOSPITAL WWTP WHITERIVER, AZ 1400–WASTE ACTIVATED SLUDGE	
CHECKED –	DATE –		
APPROVED –	DATE –	SIZE D / CONTRACT NO. – / DRAWING NO. I–26	REV. D
APPROVED –	DATE –	SCALE N/A	SHEET NO. 26–of–32

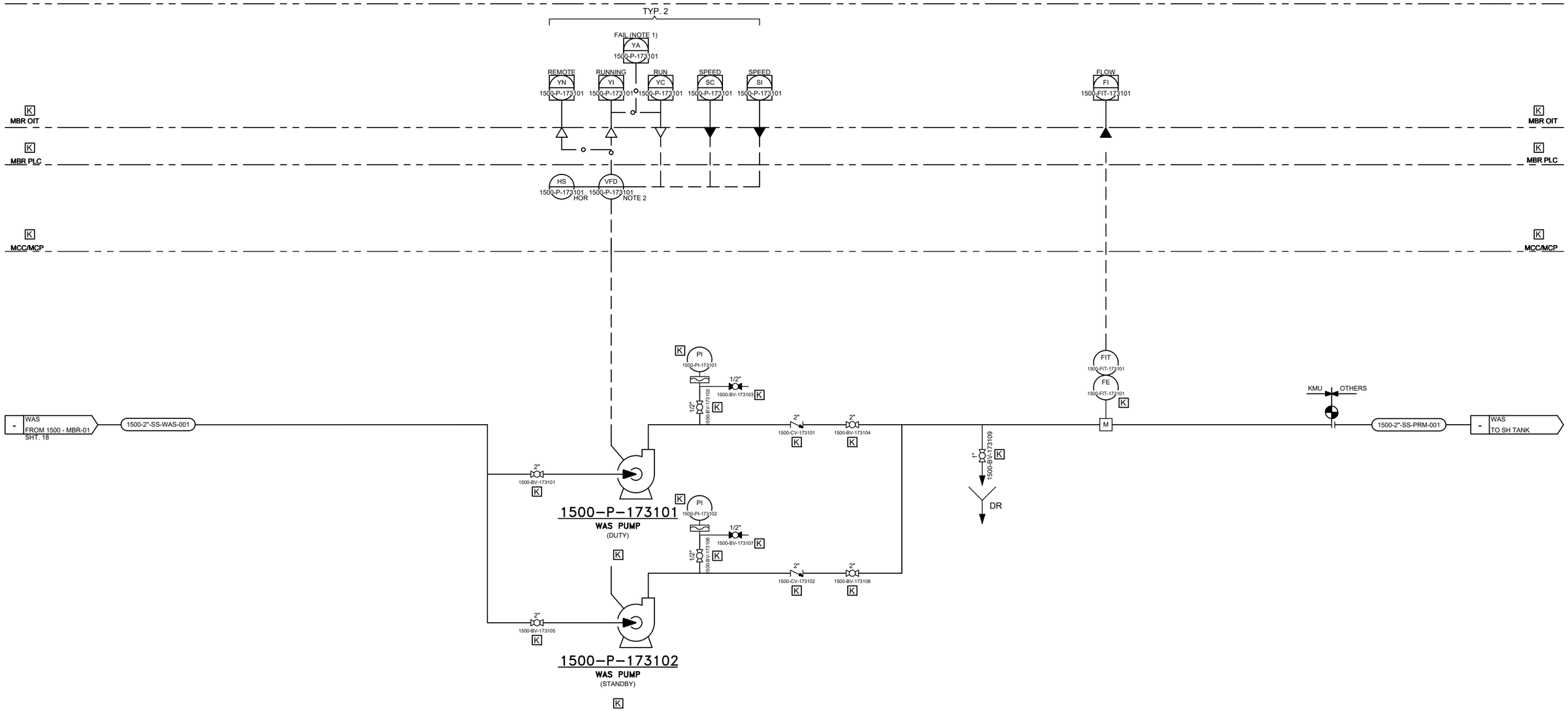

For Earth, For Life
Kubota

KUBOTA Water & Environment USA Corp.
19910 North Creek Parkway S. Suite 100
Bothell, WA 98011 USA
Tel: +1 425 898 2858

REVISIONS			
REV	DESCRIPTION	DATE	APPROVED

DRAWN DRG	DATE 12/25	HOSPITAL WWTP WHITERIVER, AZ 1500–WASTE ACTIVATED SLUDGE	
CHECKED –	DATE –		
APPROVED –	DATE –	SIZE D / CONTRACT NO. – / DRAWING NO. I–27	REV. D
APPROVED –	DATE –	SCALE N/A	SHEET NO. 27–of–32

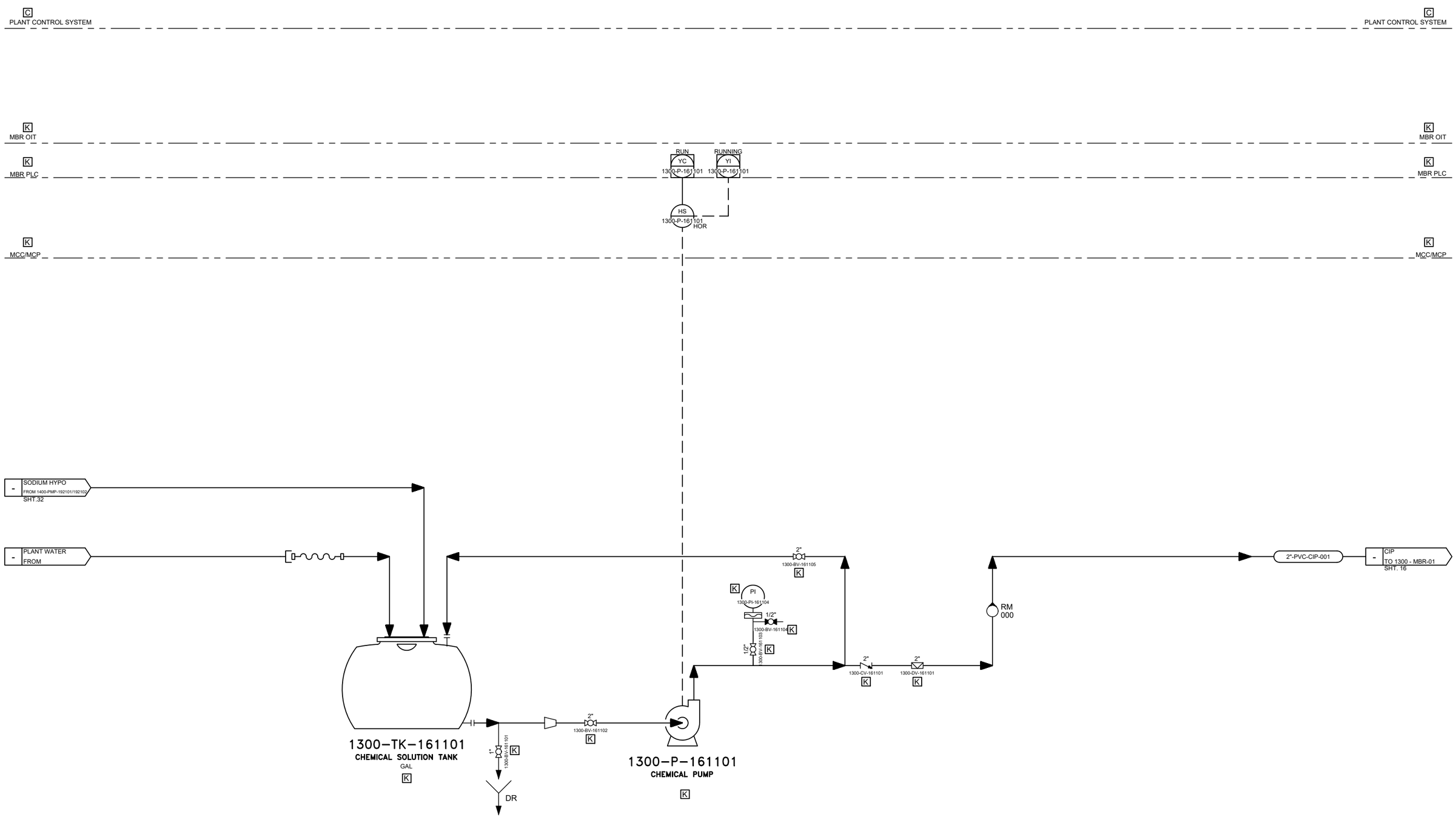

For Earth, For Life
Kubota

KUBOTA Water & Environment USA Corp.
19910 North Creek Parkway S. Suite 100
Bothell, WA 98011 USA
Tel: +1 425 898 2858

REVISIONS			
REV	DESCRIPTION	DATE	APPROVED

DRAWN DRG	DATE 12/25	HOSPITAL WWTP WHITERIVER, AZ 1300 – CIP SYSTEM	
CHECKED –	DATE –		
APPROVED –	DATE –	SIZE D / CONTRACT NO. – / DRAWING NO. I–28	REV. D
APPROVED –	DATE –	SCALE N/A	SHEET NO. 28–of–32

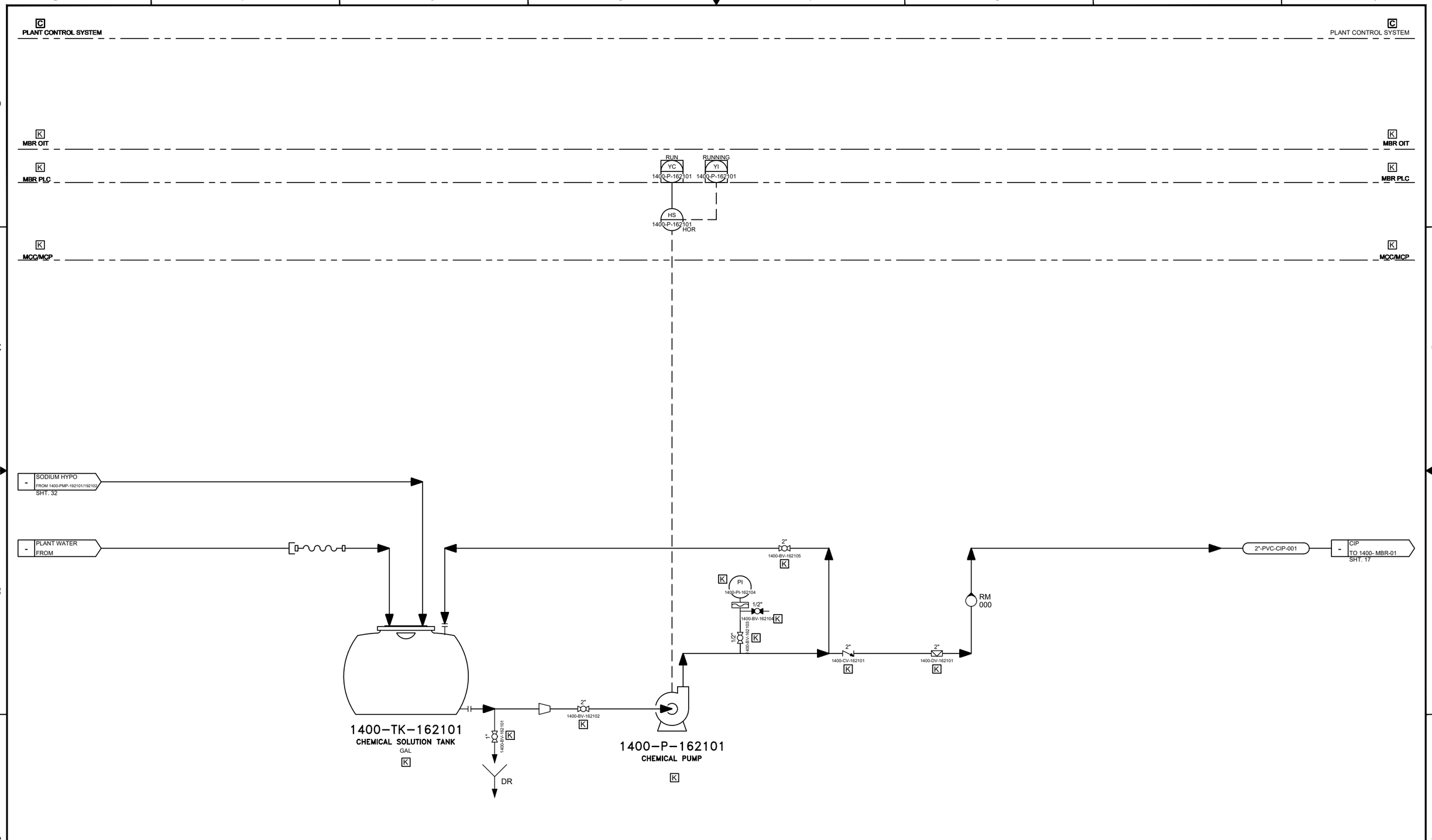

For Earth, For Life
Kubota

KUBOTA Water & Environment USA Corp.
19910 North Creek Parkway S. Suite 100
Bothell, WA 98011 USA
Tel: +1 425 898 2858

REVISIONS			
REV	DESCRIPTION	DATE	APPROVED

DRAWN DRG	DATE 12/25
CHECKED –	DATE –
APPROVED –	DATE –
APPROVED –	DATE –

HOSPITAL WWTP
WHITERIVER, AZ
1400 – CIP SYSTEM

SIZE	CONTRACT NO.	DRAWING NO.	REV.
D	–	I–29	D

SCALE	SHEET NO.
N/A	29–of–32

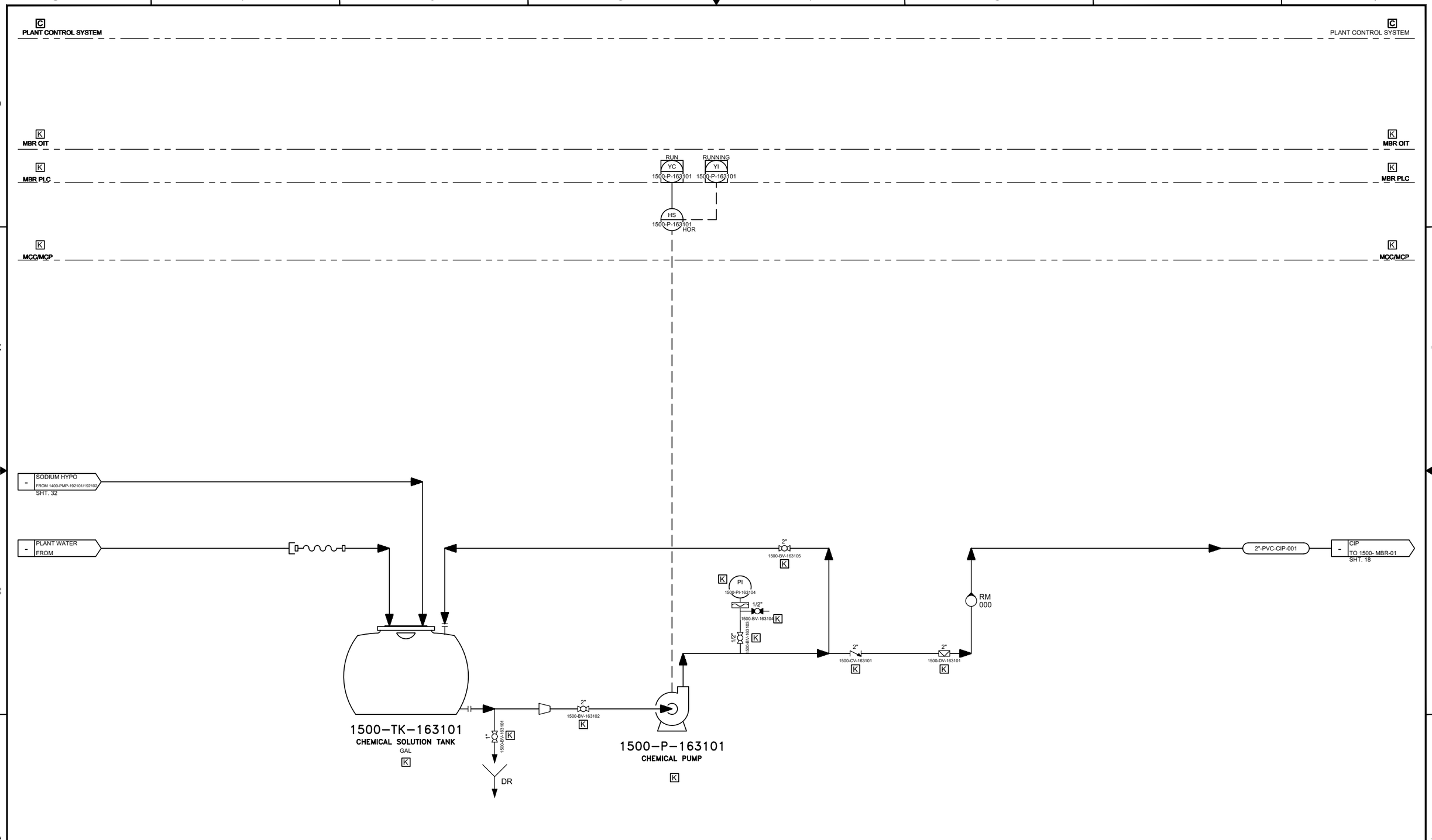

For Earth, For Life
Kubota

KUBOTA Water & Environment USA Corp.
19910 North Creek Parkway S. Suite 100
Bothell, WA 98011 USA
Tel: +1 425 898 2858

REVISIONS			
REV	DESCRIPTION	DATE	APPROVED

DRAWN DRG	DATE 12/25
CHECKED –	DATE –
APPROVED –	DATE –
APPROVED –	DATE –

HOSPITAL WWTP
WHITERIVER, AZ
1500 – CIP SYSTEM

SIZE	CONTRACT NO.	DRAWING NO.	REV.
D	–	1–30	D

SCALE N/A
SHEET NO. 30–of–32

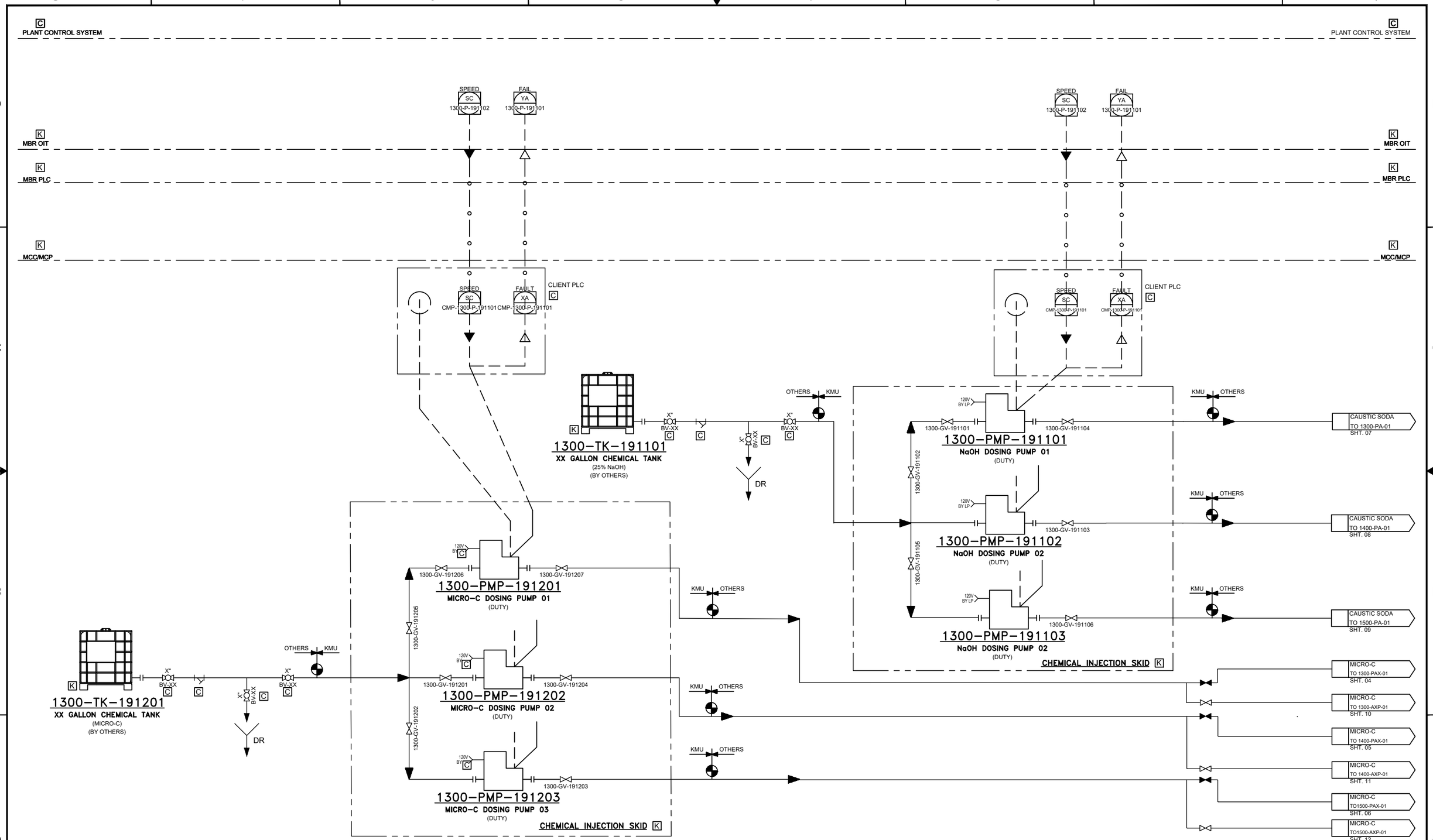

For Earth, For Life
Kubota

KUBOTA Water & Environment USA Corp.
19910 North Creek Parkway S. Suite 100
Bothell, WA 98011 USA
Tel: +1 425 898 2856

REVISIONS			
REV	DESCRIPTION	DATE	APPROVED

DRAWN DRG	DATE 12/25
CHECKED –	DATE –
APPROVED –	DATE –
APPROVED –	DATE –

HOSPITAL WWTP
WHITERIVER, AZ
NaOH AND MICRO-C

SIZE	CONTRACT NO.	DRAWING NO.	REV.
D	–	I-31	D

SCALE	SHEET NO.
N/A	31-of-32

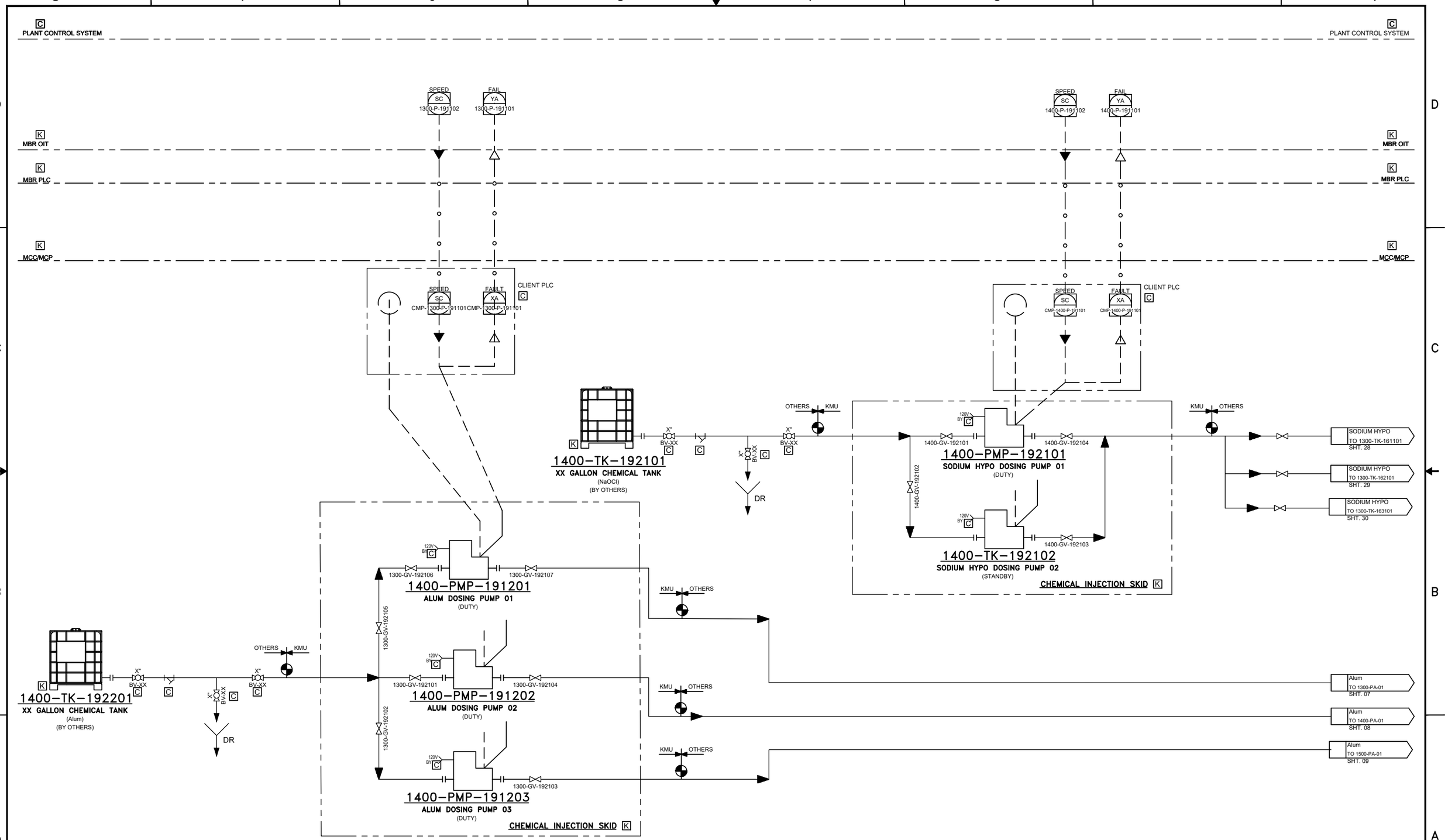

For Earth, For Life
Kubota

KUBOTA Water & Environment USA Corp.
19910 North Creek Parkway S. Suite 100
Bothell, WA 98011 USA
Tel: +1 425 898 2858

REVISIONS			
REV	DESCRIPTION	DATE	APPROVED

DRAWN DRG	DATE 12/25
CHECKED –	DATE –
APPROVED –	DATE –
APPROVED –	DATE –

HOSPITAL WWTP
WHITERIVER, AZ
SODIUM HYPO AND ALUM

SIZE	CONTRACT NO.	DRAWING NO.	REV.
D	–	I-32	D

SCALE	SHEET NO.
N/A	32-of-32

HONDAH WWTP
WHITERIVER, AZ

DRAWING LIST

I-01	COVER SHEET
I-02	SYMBOLS & LEGEND 1
I-03	SYMBOLS & LEGEND 2
I-04	2300 - ANOXIC TANK
I-05	2400 - ANOXIC TANK
I-06	2300 - PRE-AERATION BASIN
I-07	2400 - PRE-AERATION BASIN
I-08	2300 - FEED FORWARD PUMPS
I-09	2400 - FEED FORWARD PUMPS
I-10	2300 - MEMBRANE BIOREACTOR
I-11	2400 - MEMBRANE BIOREACTOR
I-12	2300 - MBR PERMEATE PUMPS
I-13	2400 - MBR PERMEATE PUMPS
I-14	2300 - MBR BLOWERS
I-15	2400 - MBR BLOWERS
I-16	2300 - WASTE ACTIVATED SLUDGE
I-17	2400 - WASTE ACTIVATED SLUDGE
I-18	2300 - CIP SYSTEM
I-19	2400 - CIP SYSTEM
I-20	2300 - NaOH and MICRO-C
I-21	2400 - NaOCl and ALUM

For Earth, For Life
Kubota

KUBOTA Water & Environment USA Corp.
19910 North Creek Parkway S. Suite 100
Bothell, WA 98011 USA
Tel; +1 425 898 2858

REVISIONS			
REV	DESCRIPTION	DATE	APPROVED

DRAWN DRG	DATE 12/25
CHECKED –	DATE –
APPROVED –	DATE –
APPROVED –	DATE –

HONDAH WWTP
WHITERIVER, AZ
COVER SHEET

SIZE	CONTRACT NO.	DRAWING NO.	REV.
D	–	I–01	D

SCALE	SHEET NO.
N/A	1–of–21

EQUALIZATION

PUMP STATION

INSTRUMENT SYMBOL LABELS

INSTRUMENT & FUNCTION SYMBOLS

	FIELD ACCESSIBLE	FRONT MAIN ACCESSIBLE	FRONT AUX ACCESSIBLE	REAR MAIN INACCESSIBLE
DISCRETE INSTRUMENT	ID LOOP CON LOC			
SHARED DISPLAY SHARED CONTROL	ID LOOP TOP BTM LOC			
COMPUTER FUNCTION	ID LOOP LOC			
PROGRAMMABLE LOGIC CONTROL	TOP ID LOOP BTM LOC			
PLC INPUT/OUTPUT	ANALOG INPUT	ANALOG OUTPUT	DISCRETE INPUT	DISCRETE OUTPUT / HARDWARE INTERLOCK

CONTROL ABBREVIATIONS

1/2	SELECT 1 OR 2 POSITION
A/M	REMOTE-MANUAL SETTING
AMSS	REMOTE-MANUAL-START-STOP FUNCTION
DO	DISSOLVED OXYGEN
ESTOP	EMERGENCY STOP
FAIL	FAILURE CONDITION
HOR	HAND-OFF-REMOTE
I/I	CURRENT TO CURRENT CONVERTER
I/P	CURRENT TO PNEUMATIC CONVERTER
LEL	LOWER EXPLOSIVE LIMIT
LOR	LOCAL-OFF-REMOTE
LOS	LOCK-OUT-STOP
LR	LOCAL-REMOTE
OC	OPEN-CLOSE
OCR	OPEN-CLOSE-REMOTE
OIL	LUBRICATING OR COOLING OIL
OIT	OPERATOR INTERFACE TERMINAL
ON	ON CONDITION
OPEN	OPEN CONDITION OR COMMAND
OSC	OPEN-STOP-CLOSE
RDY	READY CONDITION
RESET	RESET FAILURE
RUN	MAINTAINED RUN COMMAND
SP	SET POINT
SS	START-STOP
WND	MOTOR WINDING
BCN	BEACON
V/P	VOLTAGE TO PNEUMATIC CONVERTER
V/I	VOLTAGE TO CURRENT CONVERTER

GENERAL ABBREVIATIONS

AFD	ADJUSTABLE FREQUENCY DRIVE
AS	AIR SUPPLY
AXP	POST ANOXIC
BFV	BUTTERFLY VALVE
BV	BALL VALVE
CMPTR	COMPUTER
CS	CONSTANT SPEED
CTA	CITRIC ACID
CV	CHECK VALVE
DO	DISSOLVED OXYGEN
DR	DRAIN
DV	DIAPHRAGM VALVE
ES	ELECTRICAL SUPPLY
FC	FAIL CLOSED
FO	FAIL OPEN
FP	FIELD PANEL
GAL	GALLONS
GBV	GLOBAL VALVE
GND	GROUND
GV	GATE VALVE
HI	HIGH
HMI	HUMAN-MACHINE INTERFACE
I/O	INPUT/OUTPUT
INST	INSTRUMENT
KGV	KNIFE GATE VALVE
LCP	LOCAL CONTROL PANEL
MB	MBR BASIN
MBR	MEMBRANE BIOREACTOR
MCC	MOTOR CONTROL CENTER
MUX	TELEMETRY MULTIPLEXING
NC	NORMALLY CLOSED
NO	NORMALLY OPEN
NV	NEEDLE VALVE
OF	OVERFLOW
PA	PRE-AERATION
PAX	PRE-ANOXIC
PLC	PROGRAMMABLE LOGIC CONTROLLER
PRV	PRESSURE RELIEF VALVE
PT	PRESSURE TAG
PV	PLUG VALVE
PW	PLANT WATER
REQD	REQUIRED
RLS	RELEASE
RM	ROTOMETER
SB	SPLITTER BOX
SCADA	SUPERVISORY CONTROL AND DATA ACQUISITION
SH	SLUDGE HOLDING
SMU	SUBMERGED MEMBRANE UNIT
SP	SUMP PUMP
SWD	SIDE WATER DEPTH
TEMP	TEMPERATURE
TMP	TRANS MEMBRANE PRESSURE
TURB	TURBIDITY
TV	TELESCOPING VALVE
TYP	TYPICAL
UNO	UNLESS NOTED OTHERWISE
UPS	UNINTERRUTABLE POWER SUPPLY
V	VENT
VFD	VARIABLE FREQUENCY DRIVE
UV	ULTRA VIOLET
VS	VARIABLE SPEED

PROCESS ZONES

ZONE #	PROCESS DESCRIPTION
00	GENERAL
01	PUMP STATION
02	HEADWORKS
03	EQUALIZATION
04	DE-OX
05	ANAEROBIC
06	PRE-ANOXIC
07	SWING BASIN
08	PRE-AERATION
09	POST-ANOXIC
10	MEMBRANE BIOREACTOR
11	REACTIVATED SLUDGE
12	INTERNAL RECYCLE
13	PERMEATE COLLECTION
14	SCOUR AIR
15	PROCESS AIR
16	CLEAN IN PLACE
17	WASTE ACTIVATED SLUDGE
18	ULTRA VIOLET FILTRATION
19	CHEMICAL ADDITION
20	ANOXIC
99	PLC/SCADA

LINE SYMBOLS

	MAIN PROCESS FLOW
	MAIN PROCESS FLOW (EXISTING)
	SECONDARY PROCESS FLOW
	SECONDARY (EXISTING)
	NON PROCESS FLOW
	PNEUMATIC INSTRUMENT AIR
	ELECTRIC SIGNAL
	CAPILLARY TUBE
	SONIC SIGNAL (UNGUIDED)
	SOFTWARE OR DATA LINK
	MECHANICAL LINK
	HYDRAULIC
120V	POWER SUPPLY
SA	SERVICE AIR AUPPLY

EQUIPMENT LABELS

EQUIPMENT NUMBER

EQUIPMENT NAME

SPEC 01
SPEC 02
SPEC 03
SPEC 04

001–X–010101

CLIENT ZONE NUMBER — DEVICE — PROCESS ZONE — TRAIN — BASIN — INSTANCE

INSTRUMENT SYMBOL LABEL IDENTIFICATION

	FIRST LETTER		SUCCEEDING LETTERS		
	MEASURED OR INITIATING VARIABLE	MODIFIER	READOUT OR PASSIVE FUNCTION	OUTPUT FUNCTION	MODIFIER
A	ANALYSIS		ALARM		
B	BURNER,COMBUSTION		USER'S CHOICE	USER'S CHOICE	USER'S CHOICE
C	USER'S CHOICE			CONTROL	
D	DENSITY	DIFFERENTIAL			
E	VOLTAGE		SENSOR(PRIMARY ELEMENT)		
F	FLOW RATE	RATIO(FRACTION)			
G	USER'S CHOICE		GLASS,VIEWIG DEVIDE		
H	HAND				HIGH
I	CURRENT(ELECTRICAL)		INDICATE		
J	POWER	SCAN			
K	TIME,TIME SCHEDULE	TIME RATE OF CHANGE		CONTROL STATION	
L	LEVEL		LIGHT		LOW
M	MOISTURE	MOMENTARY			MIDDLE,INTERMEDIATE
N	USER'S CHOICE		USER'S CHOICE	USER'S CHOICE	USER'S CHOICE
O	USER'S CHOICE		ORIFICE,RESTRICTION		
P	PRESSURE,VACUUM		POINT(TEST) CONNECTION		
Q	QUANTITY	INTEGRATE,TOTALIZE			
R	RADIATION		RECORD		
S	SPEED,FREQUENCY	SAFETY		SWITCH	
T	TEMPERATURE			TRANSMIT	
U	MULTIVARIABLE		MULTIFUNCTION	MULTIFUNCTION	MULTIFUNCTION
V	VIBRATION,MECANICAL ANALYSIS			VALVE,DAMPER,OR LOUVER	
W	WEIGHT,FORCE		WELL		
X	UNCLASSIFIED	X AXIS	UNCLASSIFIED	UNCLASSIFIED	UNCLASSIFIED
Y	EVENT,STATE,PRESENCE	Y AXIS		RELAY,COMPUTE,CONVERT	
Z	POSITION,DIMENSION	Z AXIS		DRIVER,ACTUATOR, UNCLASSIFIED,FINAL CONTROL ELEMENT	

PIPE LINE NUMBER IDENTIFIER

X-MTL-FSA-000

X = PIPE SIZE
MTL = PIPE MATERIAL
FSA = FLOW STREAM ABBREVIATION
000 = INSTANCE NUMBER

VALVE NUMBER IDENTIFIER

X
TR-VA-PZ00

TR = TRAIN NUMBER
X = VALVE SIZE
VA = VALVE TYPE ABBREVIATION
PZ = PROCESS ZONE
000 = INSTANCE NUMBER

FLOW STREAM ABBREVIATIONS

CAS	CAUSTIC SODA
CIP	CLEAN IN PLACE
CTA	CITRIC ACID
FF	FEED FORWARD
INF	INFLUENT
IR	INTERNAL RECYCLE
MCRC	MICRO-C
NaOH	SODIUM HYDROXIDE
PA	PROCESS AIIR
PRM	PERMEATE
PW	PLANT WATER
RAS	RETURN ACTIVATED SLUDGE
SCA	SCOUR AIR
SHC	SODIUM HYPOCHLORITE
WAS	WASTE ACTIVATED SLUDGE

SHEET CONNECTION SYMBOLS

- FLOW STREAM ORIGIN/DESTINATION SHT XX. — PROCESS CONNECTION IN THIS CONTRACT

X = INSTANCE NUMBER

FLOW STREAM ORIGIN/DESTINATION — PROCESS CONNECTION NOT IN THIS CONTRACT

FLOW STREAM ORIGIN/DESTINATION ORIGIN/DESTINATION — PROCESS CONNECTION NOT IN THIS CONTRACT OPTIONAL

FLOW PRIMARY ELEMENT SYMBOLS

	ORIFICE PLATE
	SINGLE PORT PITOT TUBE OR PITOT-VENTURI TUBE
	AVERAGING PITOT TUBE
T	THERMAL MASS FLOWMETER
M	MAGNETIC FLOWMETER
	TURBINE OR PROPELLER-TYPE PRIMARY ELEMENT
	ROTOMETER
	POSITIVE DISPLACEMENT TYPE FLOW TOTALIZING INDICATOR
	VORTEX SENSOR
	TARGET TYPE SENSOR
	VENTURI TUBE
	SONIC FLOWMETER
	DENSITY METER

GENERAL NOTES:

NOTE 1: CONTROL FAIL ALARM. FOR TROUBLESHOOTING, CHECK FIELD SWITCHES, MCC, PROTECTION MODULE, LOCAL CP AND/OR WIRES.

NOTE 2: SEE EXAMPLE MOTOR CONTROL SCHEMATIC FOR DETAIL. ADD ETHERNET SWITCH WITH AUX I/O AS REQUIRED. HARD WIRES ARE RECOMMENDED FOR RUN COMMAND AND SPEED COMMAND FROM MBR PLC.

NOTE 3: STANDARD BRAY MODEL IS ASSUMED FOR ALL MODULATING AND ON/OFF VALVES EXCEPT FOR DEGAS VALVES. MODIFY BASED ON FINAL ACTUATOR SELECTION. PERMEATE FLOW ON/OFF AND MODULATING VALVES FOR GRAVITY FILTRATION SHALL HAVE BACK-UP POWER TO STOP GRAVITY FLOW DURING POWER LOSS.

NOTE 4: APPLY TRANSPARENT PIPE WITH 3" MIN. ON EACH PERMEATE PIPE BRANCH FOR GRAVITY FILTRATION WITH SUBMERGED PIPING.

NOTE 5: PUMP MONITOR RELAY. REFER MANUFACTURER SUBMITTAL FOR DETAIL.

For Earth, For Life
Kubota

KUBOTA Water & Environment USA Corp.
19910 North Creek Parkway S. Suite 100
Bothell, WA 98011 USA
Tel: +1 425 898 2858

REVISIONS

REV	DESCRIPTION	DATE	APPROVED

DRAWN DRG	DATE 12/25	HONDAH WWTP WHITERIVER, AZ SYMBOLS & LEGEND	
CHECKED –	DATE –		
APPROVED –	DATE –	SIZE D	CONTRACT NO. – / DRAWING NO. I–02 / REV. D
APPROVED –	DATE –	SCALE N/A	SHEET NO. 2–of–21

VALVE SYMBOLS

NORMALLY OPEN	NORMALLY CLOSED	3-WAY	
			GATE VALVE
			GLOBE VALVE
X" BV-XX	X" BV-XX	X" BV-XX	BALL VALVE
X" PV-XX	X" PV-XX		PLUG VALVE
BF-XX			BUTTERFLY VALVE
			DIAPHRAGM VALVE
X" CV-XX			CHECK VALVE
NV-XX			NEEDLE VALVE
			KNIFE GATE VALVE
			PRESSURE RELIEF VALVE
PI			PRESSURE REDUCING REGULATING VALVE. SELF-CONTAINED
X" V-XX			BACK PRESSURE REGULATING VALVE. SELF-CONTAINED

VALVE OPERATOR SYMBOLS

	DIAPHRAGM, SPRING
	DIAPHRAGM, PRESSURE BALANCED
	HANDWHEEL
M	MOTOR
	CYLINDER
S	SOLENOID

MECHANICAL EQUIPMENT & PIPING SYMBOLS

	SUBMERSIBLE PUMP		INLET FILTER		WEIR		INJECTOR		FLOW DIRECTION ARROW
	SUBMERSIBLE PUMP WITH GUIDE RAIL		INLET SILENCER / FILTER		SLIDE GATE		FLEXIBLE HOSE		LINE CROSS PRIMARY PROCESS
	DRY SUMP PUMP		AIR COMPRESSOR		WALL MOUNT MIXER		TANK VENT		LINE CROSS SECONDARY PROCESS
	CENTRIFUGAL PUMP		BUBBLE TRAP		MIXER	DR	DRAIN	BY OTHERS BY KBT	SCOPE OR SPEC BREAK
	METERING PUMP		CHEMICAL STORAGE TOTE		INVENT MIXER		PIPE UNION		55 GALLON DRUM
	ROTARY LOBE PUMP		CHEMICAL STORAGE TANK		TELESCOPING VALVE		FLANGE		SILENCER
	DIAPHRAGM PUMP		ROTARY SIEVE DRUM SCREEN		ELECTRIC MOTOR		BLIND FLANGE		
	PARISTALTIC PUMP		ROTARY DRUM SCREEN		SAFETY SHOWER		REDUCER		
	POSITIVE DISPLACEMENT PUMP		WASHER CONVEYOR		ROLLER BIN		Y-STRAINER		
	PROGRESSIVE CAVITY PUMP		SMU SINGLE WITH CA		HOSE CONNECTION		PIPE CAP OR PLUG		
	AIR LIFT PUMP		SMU SINGLE 2 MNFD		RUPTURE DISK		PIPE WELD CAP		
	CENTRIFUGAL BLOWER		SMU DOUBLE WITH CA		DIAPHRAGM SEAL		PIPE EXPANSION JOINT		
	ROTARY BLOWER		SMU SINGLE WITHOUT CA		FLOW STRAIGHTENING VANE				
	ROTARY SCREW BLOWER		SMU DOUBLE WITHOUT CA		INLINE MIXER				

For Earth, For Life
Kubota

KUBOTA Water & Environment USA Corp.
19910 North Creek Parkway S. Suite 100
Bothell, WA 98011 USA
Tel: +1 425 898 2858

REVISIONS			
REV	DESCRIPTION	DATE	APPROVED

DRAWN DRG	DATE 12/25
CHECKED –	DATE –
APPROVED –	DATE –
APPROVED –	DATE –

HONDAH WWTP
WHITERIVER, AZ
SYMBOLS & LEGEND

SIZE	CONTRACT NO.	DRAWING NO.	REV.
D	–	I-03	D

SCALE N/A | SHEET NO. 3-of-21

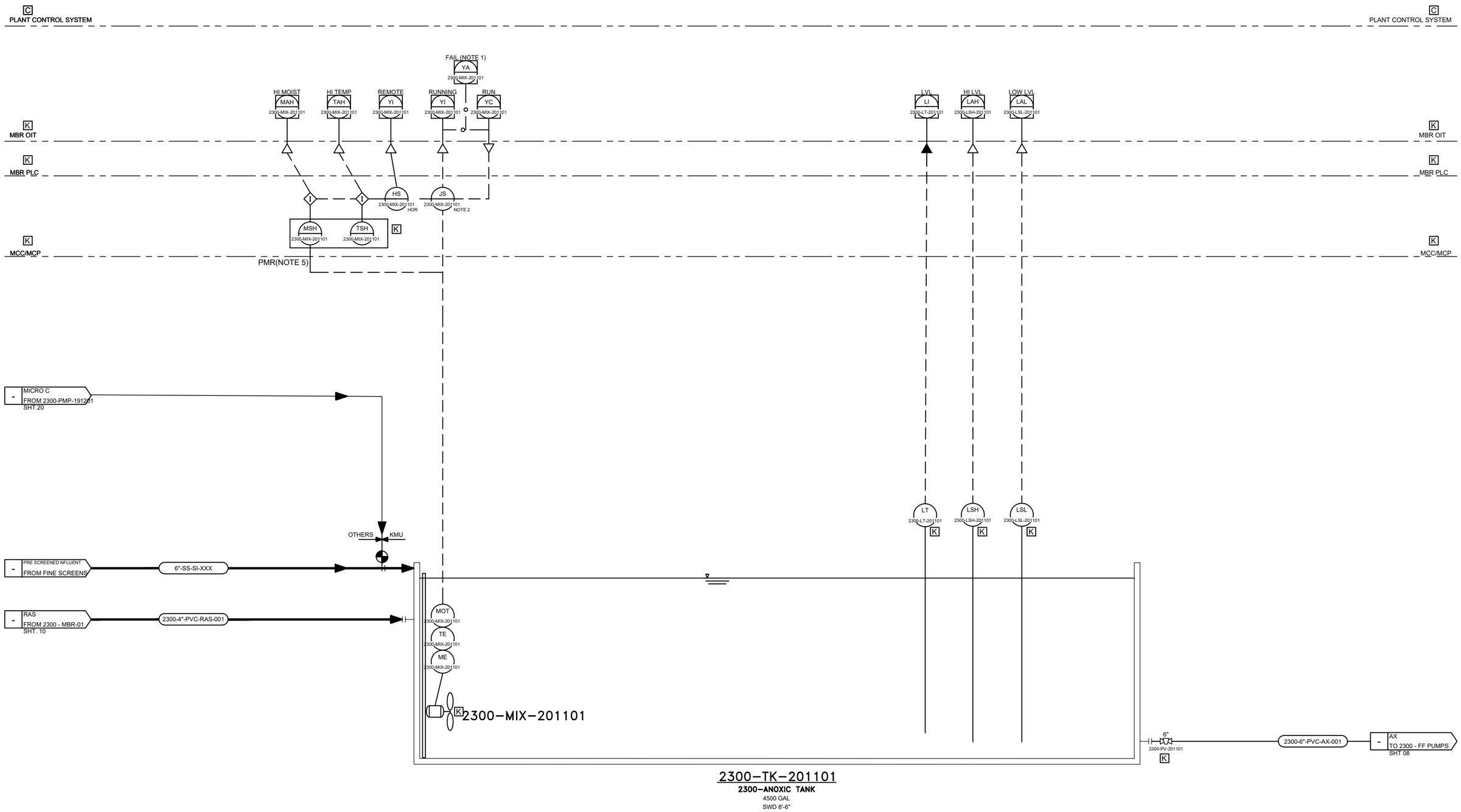

K PROVIDED BY KUBOTA

C PROVIDED BY OTHERS/CONTRACTOR

For Earth, For Life
Kubota

KUBOTA Water & Environment USA Corp.
19910 North Creek Parkway S. Suite 100
Bothell, WA 98011 USA
Tel: +1 425 898 2858

REVISIONS			
REV	DESCRIPTION	DATE	APPROVED

DRAWN DRG	DATE 12/25	HONDAH WWTP WHITERIVER, AZ 2300–ANOXIC TANK	
CHECKED –	DATE –		
APPROVED –	DATE –	SIZE D / CONTRACT NO. – / DRAWING NO. I–04	REV. D
APPROVED –	DATE –	SCALE N/A	SHEET NO. 4–of–21

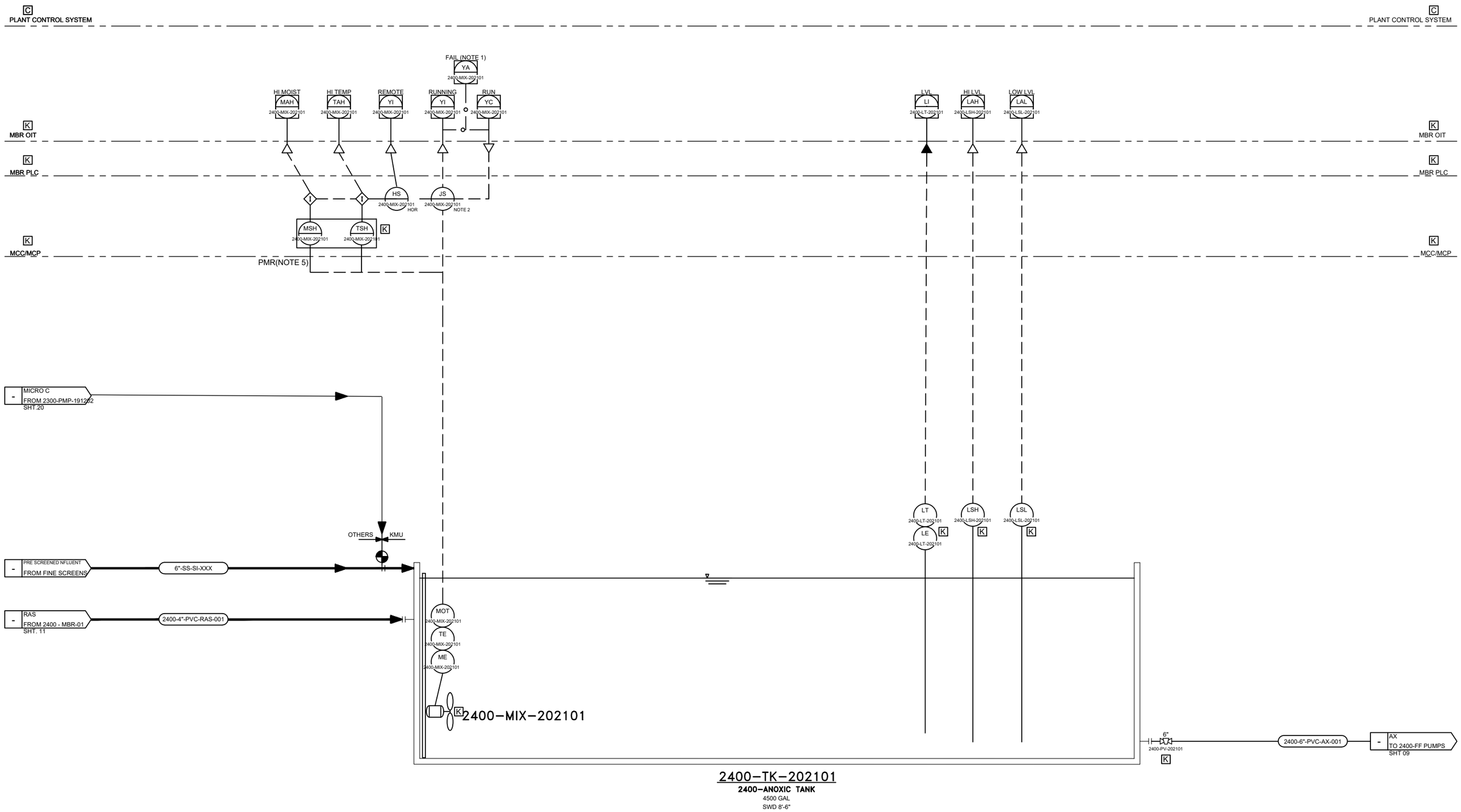

K PROVIDED BY KUBOTA

C PROVIDED BY OTHERS/CONTRACTOR

For Earth, For Life
Kubota

KUBOTA Water & Environment USA Corp.
19910 North Creek Parkway S. Suite 100
Bothell, WA 98011 USA
Tel: +1 425 898 2858

REVISIONS			
REV	DESCRIPTION	DATE	APPROVED

DRAWN DRG	DATE 12/25	HONDAH WWTP WHITERIVER, AZ 2400–ANOXIC TANK	
CHECKED –	DATE –		
APPROVED –	DATE –	SIZE D / CONTRACT NO. – / DRAWING NO. I–05	REV. D
APPROVED –	DATE –	SCALE N/A	SHEET NO. 5–of–21

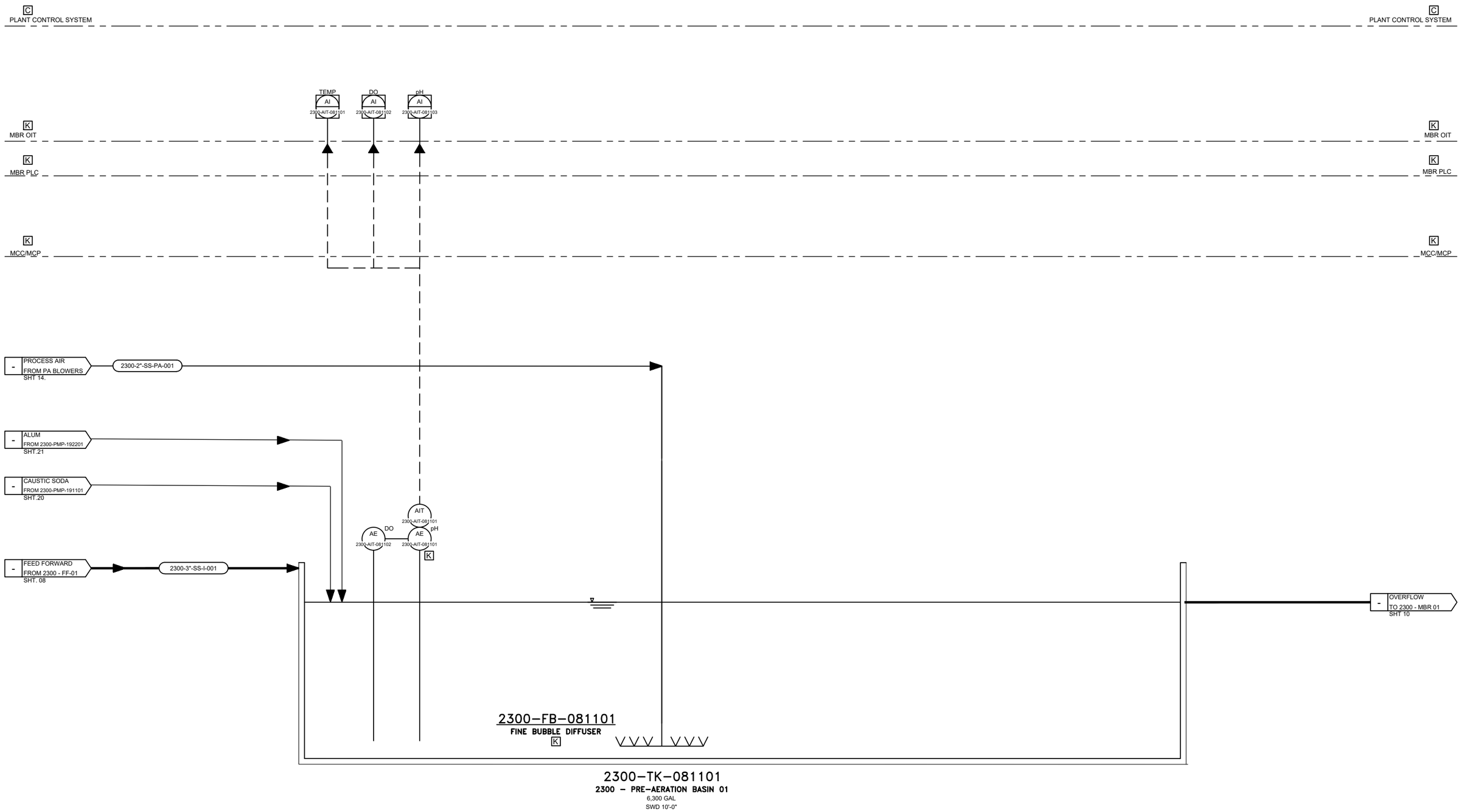

K PROVIDED BY KUBOTA

C PROVIDED BY OTHERS/CONTRACTOR

For Earth, For Life
Kubota

KUBOTA Water & Environment USA Corp.
19910 North Creek Parkway S. Suite 100
Bothell, WA 98011 USA
Tel: +1 425 898 2858

REVISIONS			
REV	DESCRIPTION	DATE	APPROVED

DRAWN DRG	DATE 12/25		
CHECKED –	DATE –		
APPROVED –	DATE –		
APPROVED –	DATE –		

HONDAH WWTP
WHITERIVER, AZ
2300–PRE–AERATOIN BASIN

SIZE	CONTRACT NO.	DRAWING NO.	REV.
D	–	I–06	D

SCALE	SHEET NO.
N/A	6–of–21

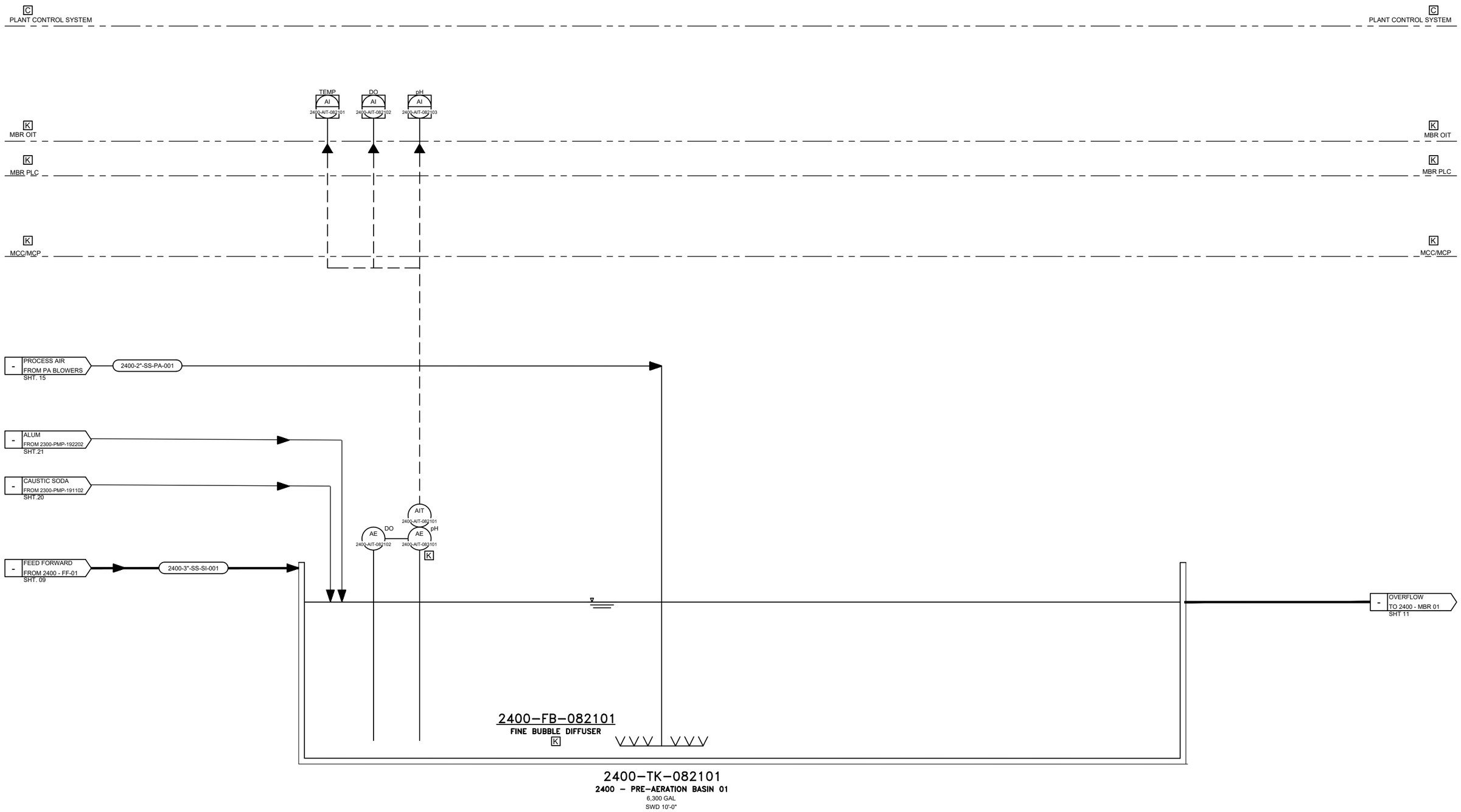

K PROVIDED BY KUBOTA

C PROVIDED BY OTHERS/CONTRACTOR

For Earth, For Life
Kubota

KUBOTA Water & Environment USA Corp.
19910 North Creek Parkway S. Suite 100
Bothell, WA 98011 USA
Tel: +1 425 898 2858

REVISIONS			
REV	DESCRIPTION	DATE	APPROVED

DRAWN DRG	DATE 12/25		
CHECKED –	DATE –		
APPROVED –	DATE –		
APPROVED –	DATE –		

HONDAH WWTP
WHITERIVERR, AZ
2400–PRE–AERATOIN BASIN

SIZE	CONTRACT NO.	DRAWING NO.	REV.
D	–	I–07	D

SCALE	SHEET NO.
N/A	7–of–21

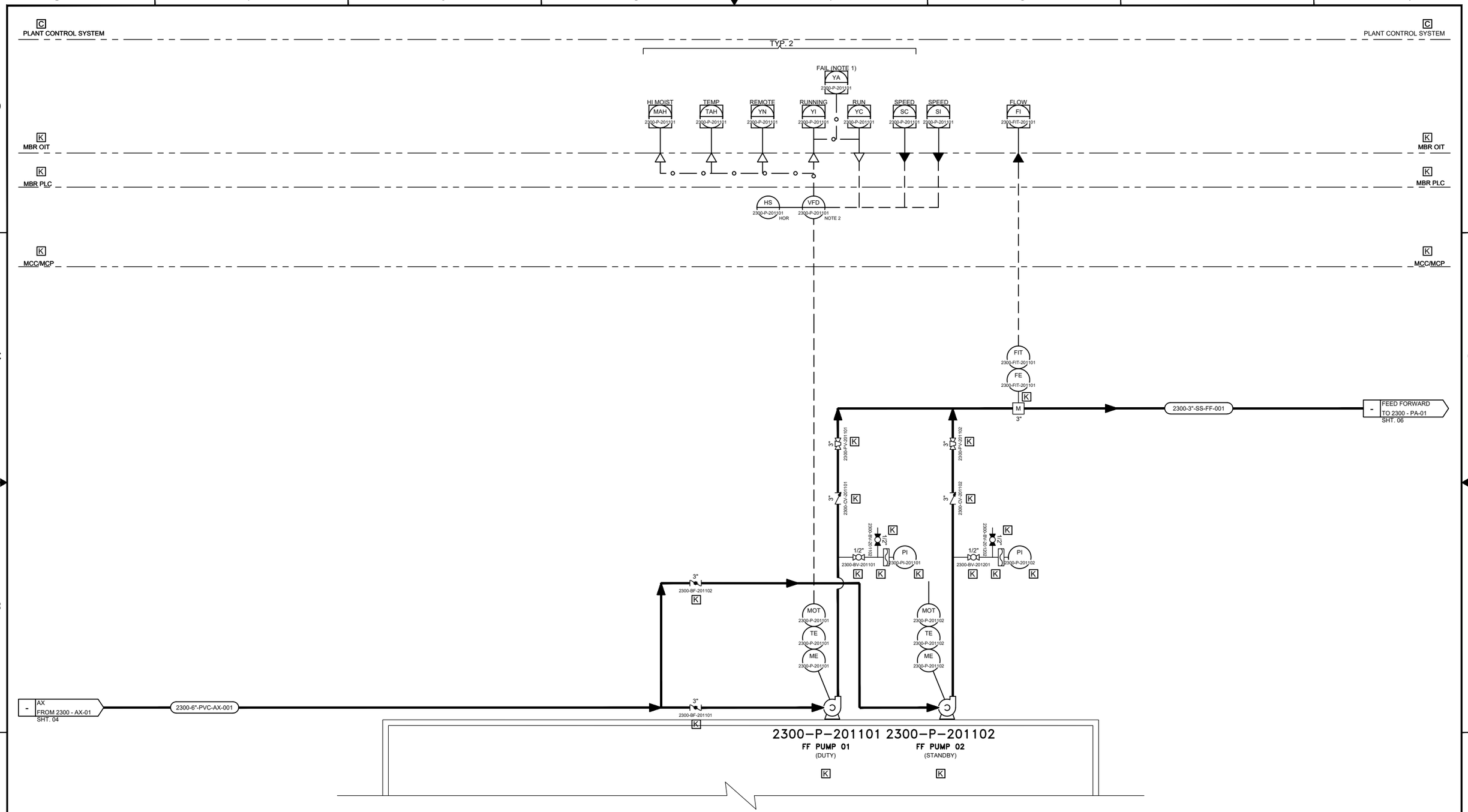

K PROVIDED BY KUBOTA

C PROVIDED BY OTHERS/CONTRACTOR

For Earth, For Life
Kubota

KUBOTA Water & Environment USA Corp.
19910 North Creek Parkway S. Suite 100
Bothell, WA 98011 USA
Tel: +1 425 898 2858

REVISIONS			
REV	DESCRIPTION	DATE	APPROVED

DRAWN DRG	DATE 12/25	HONDAH WWTP WHITERIVER, AZ 2300–FEED FORWARD PUMPS	
CHECKED –	DATE –		
APPROVED –	DATE –	SIZE D / CONTRACT NO. – / DRAWING NO. I–08	REV. D
APPROVED –	DATE –	SCALE N/A	SHEET NO. 8–of–21

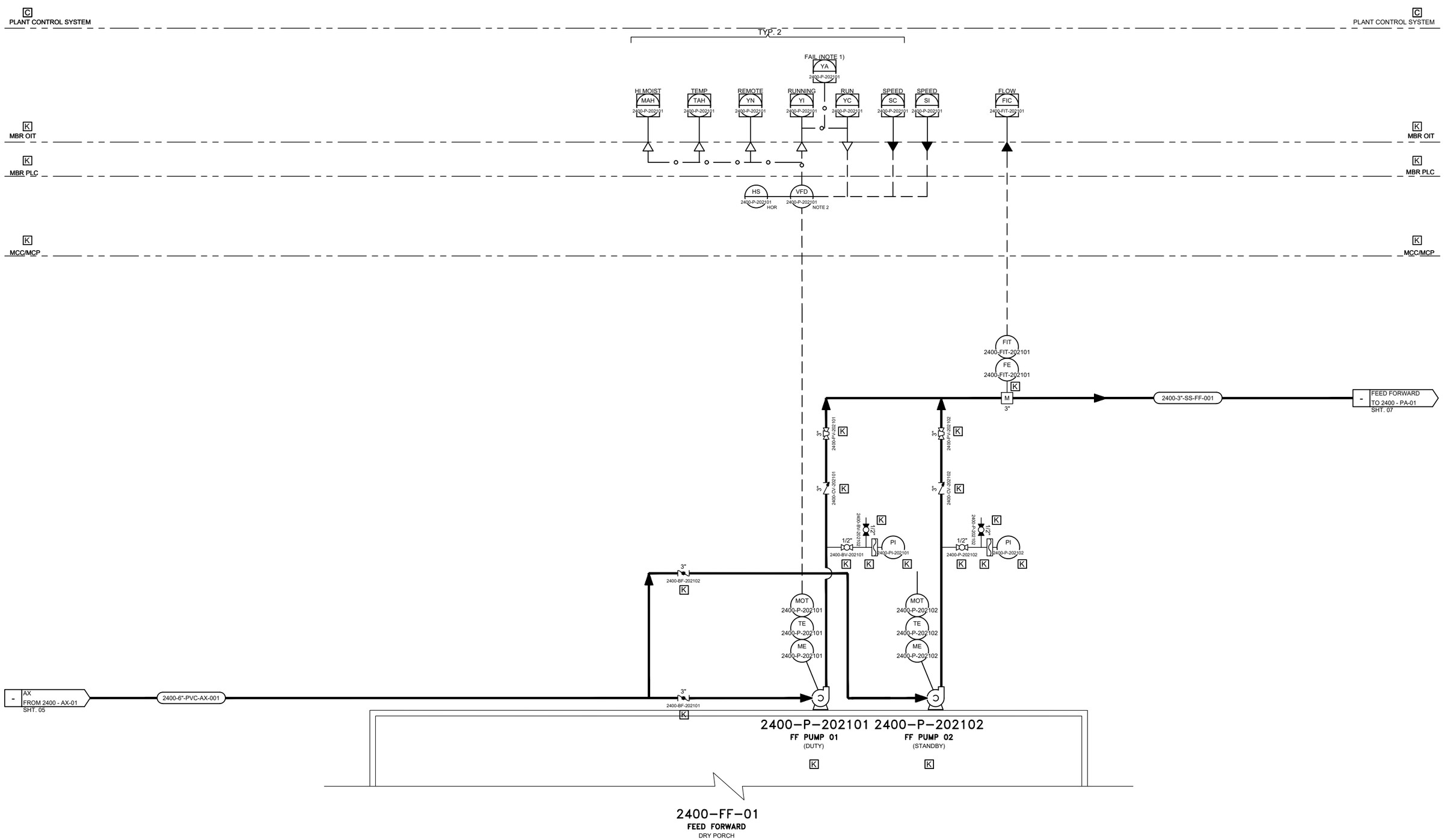

K PROVIDED BY KUBOTA

C PROVIDED BY OTHERS/CONTRACTOR

For Earth, For Life
Kubota

KUBOTA Water & Environment USA Corp.
19910 North Creek Parkway S. Suite 100
Bothell, WA 98011 USA
Tel: +1 425 898 2858

REVISIONS			
REV	DESCRIPTION	DATE	APPROVED

DRAWN DRG	DATE 12/25		
CHECKED –	DATE –		
APPROVED –	DATE –		
APPROVED –	DATE –		

HONDAH WWTP
WHITERIVER, AZ
2400–FEED FORWARD PUMPS

SIZE	CONTRACT NO.	DRAWING NO.	REV.
D	–	I–09	D

SCALE	SHEET NO.
N/A	9–of–21

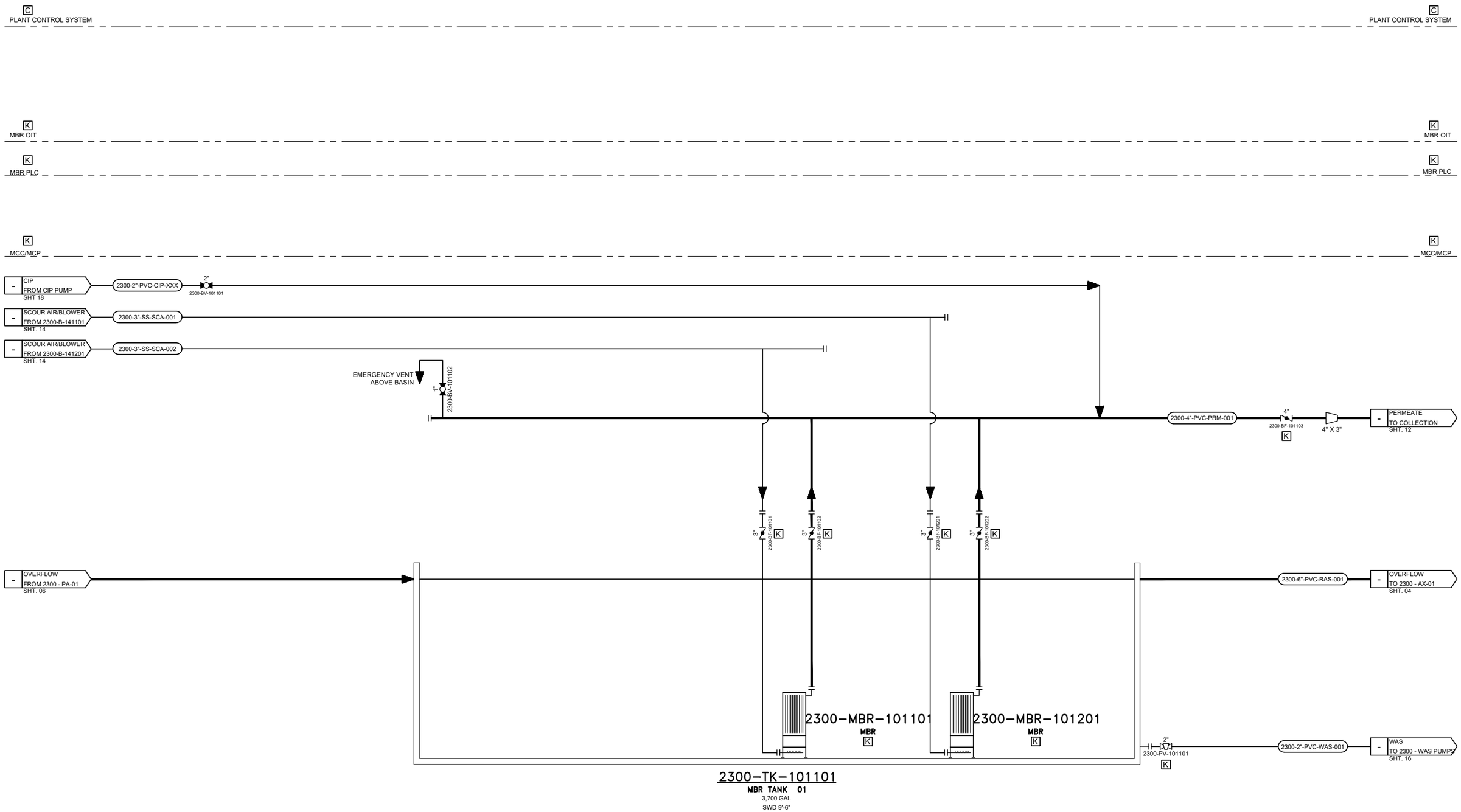

K PROVIDED BY KUBOTA

C PROVIDED BY OTHERS/CONTRACTOR

For Earth, For Life
Kubota

KUBOTA Water & Environment USA Corp.
19910 North Creek Parkway S. Suite 100
Bothell, WA 98011 USA
Tel: +1 425 888 2858

REVISIONS			
REV	DESCRIPTION	DATE	APPROVED

DRAWN DRG	DATE 12/25	HONDAH WWTP WHITERIVER, AZ 2300–MEMBRANE BIOREACTOR	
CHECKED –	DATE –		
APPROVED –	DATE –	SIZE D / CONTRACT NO. – / DRAWING NO. I–10	REV. D
APPROVED –	DATE –	SCALE N/A	SHEET NO. 10–of–21

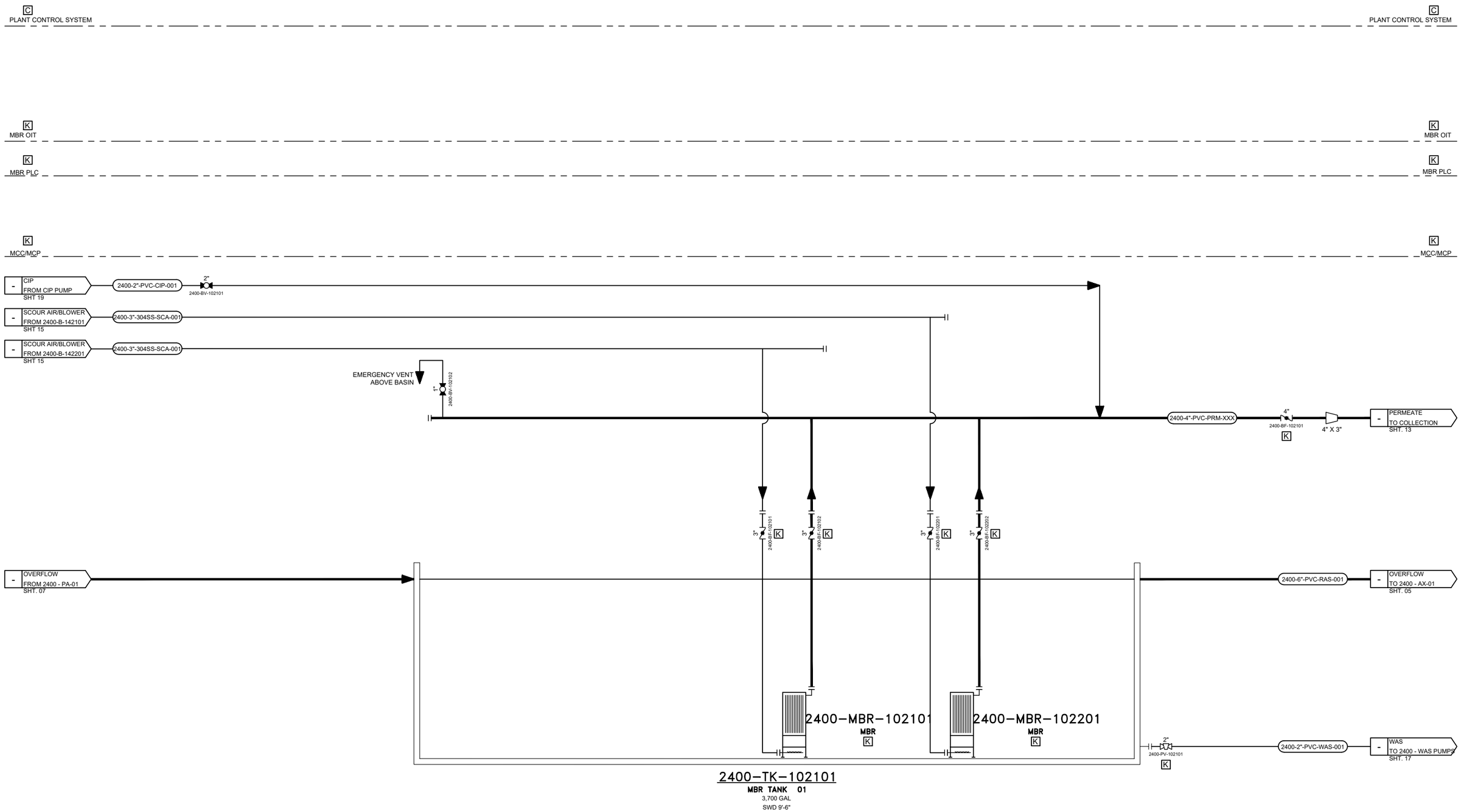

K PROVIDED BY KUBOTA

C PROVIDED BY OTHERS/CONTRACTOR

For Earth, For Life
Kubota

KUBOTA Water & Environment USA Corp.
19910 North Creek Parkway S. Suite 100
Bothell, WA 98011 USA
Tel: +1 425 898 2858

REVISIONS			
REV	DESCRIPTION	DATE	APPROVED

DRAWN DRG	DATE 12/25		
CHECKED –	DATE –		
APPROVED –	DATE –		
APPROVED –	DATE –		

HONDAH WWTP
WHITERIVER, AZ
2400–MEMBRANE BIOREACTOR

SIZE	CONTRACT NO.	DRAWING NO.	REV.
D	–	I–11	D

SCALE	SHEET NO.
N/A	11–of–21

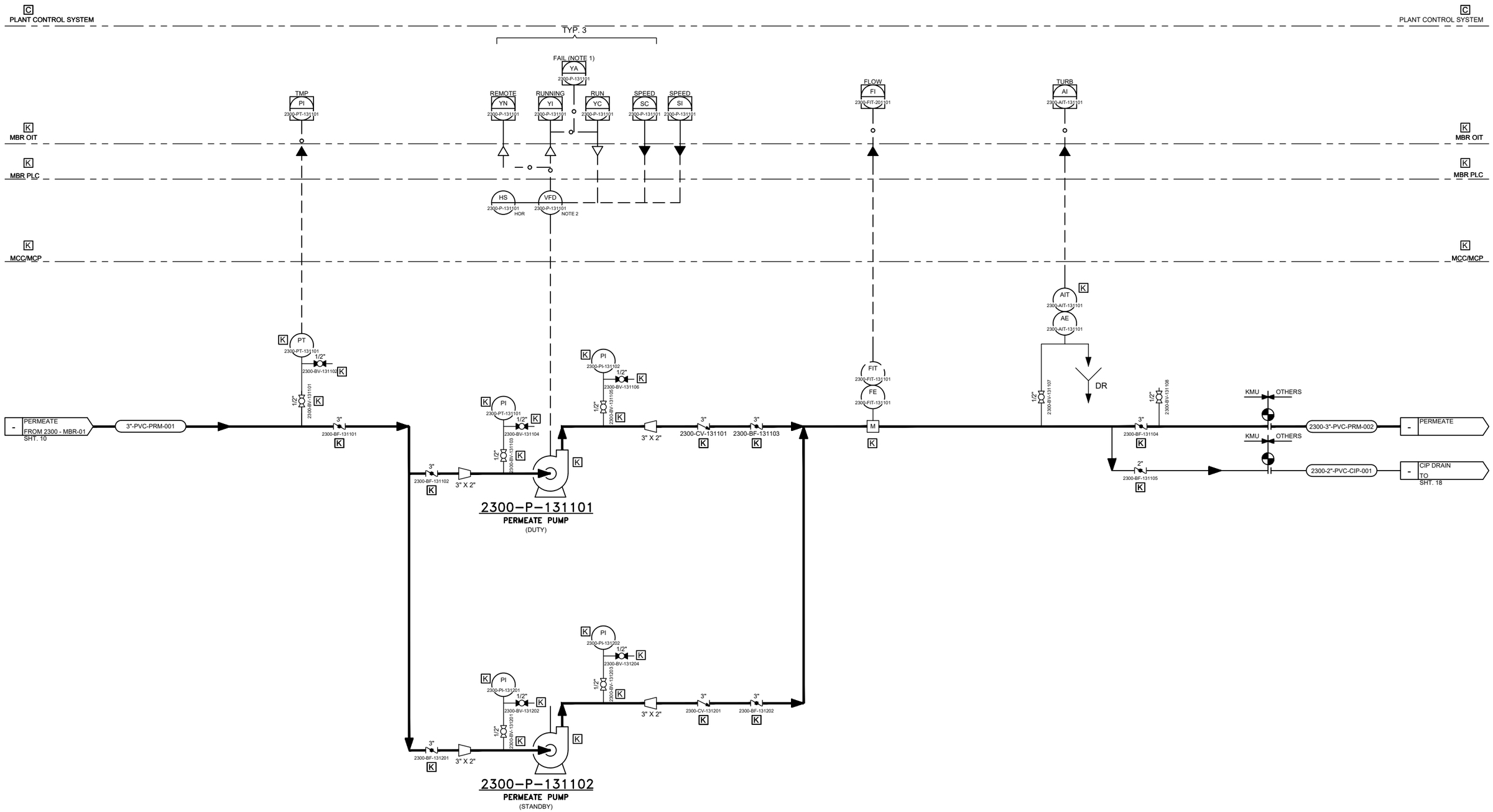

K PROVIDED BY KUBOTA

C PROVIDED BY OTHERS/CONTRACTOR

For Earth, For Life
Kubota

KUBOTA Water & Environment USA Corp.
19910 North Creek Parkway S. Suite 100
Bothell, WA 98011 USA
Tel: +1 425 898 2858

REVISIONS			
REV	DESCRIPTION	DATE	APPROVED

DRAWN DRG	DATE 12/25	HONDAH WWTP WHITERIVER, AZ 2300-MBR PERMEATE PUMPS	
CHECKED –	DATE –		
APPROVED –	DATE –	SIZE D / CONTRACT NO. – / DRAWING NO. I-12	REV. D
APPROVED –	DATE –	SCALE N/A	SHEET NO. 12-of-21

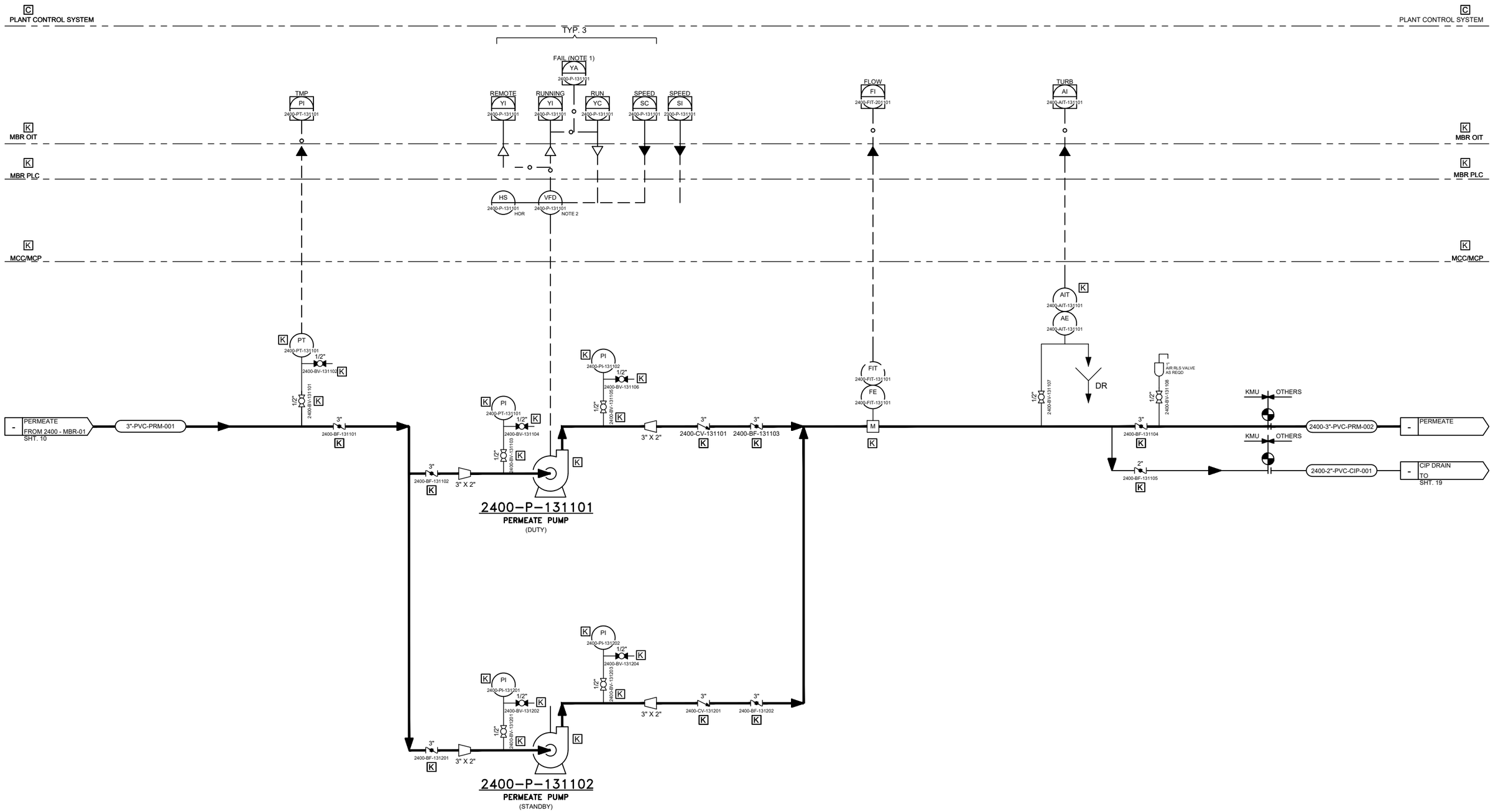

K PROVIDED BY KUBOTA

C PROVIDED BY OTHERS/CONTRACTOR

For Earth, For Life
Kubota

KUBOTA Water & Environment USA Corp.
19910 North Creek Parkway S. Suite 100
Bothell, WA 98011 USA
Tel: +1 425 898 2858

REVISIONS			
REV	DESCRIPTION	DATE	APPROVED

DRAWN DRG	DATE 12/25	HONDAH WWTP WHITERIVER, AZ 2400-MBR PERMEATE PUMPS	
CHECKED –	DATE –		
APPROVED –	DATE –	SIZE D / CONTRACT NO. – / DRAWING NO. I-13	REV. D
APPROVED –	DATE –	SCALE N/A	SHEET NO. 13-of-21

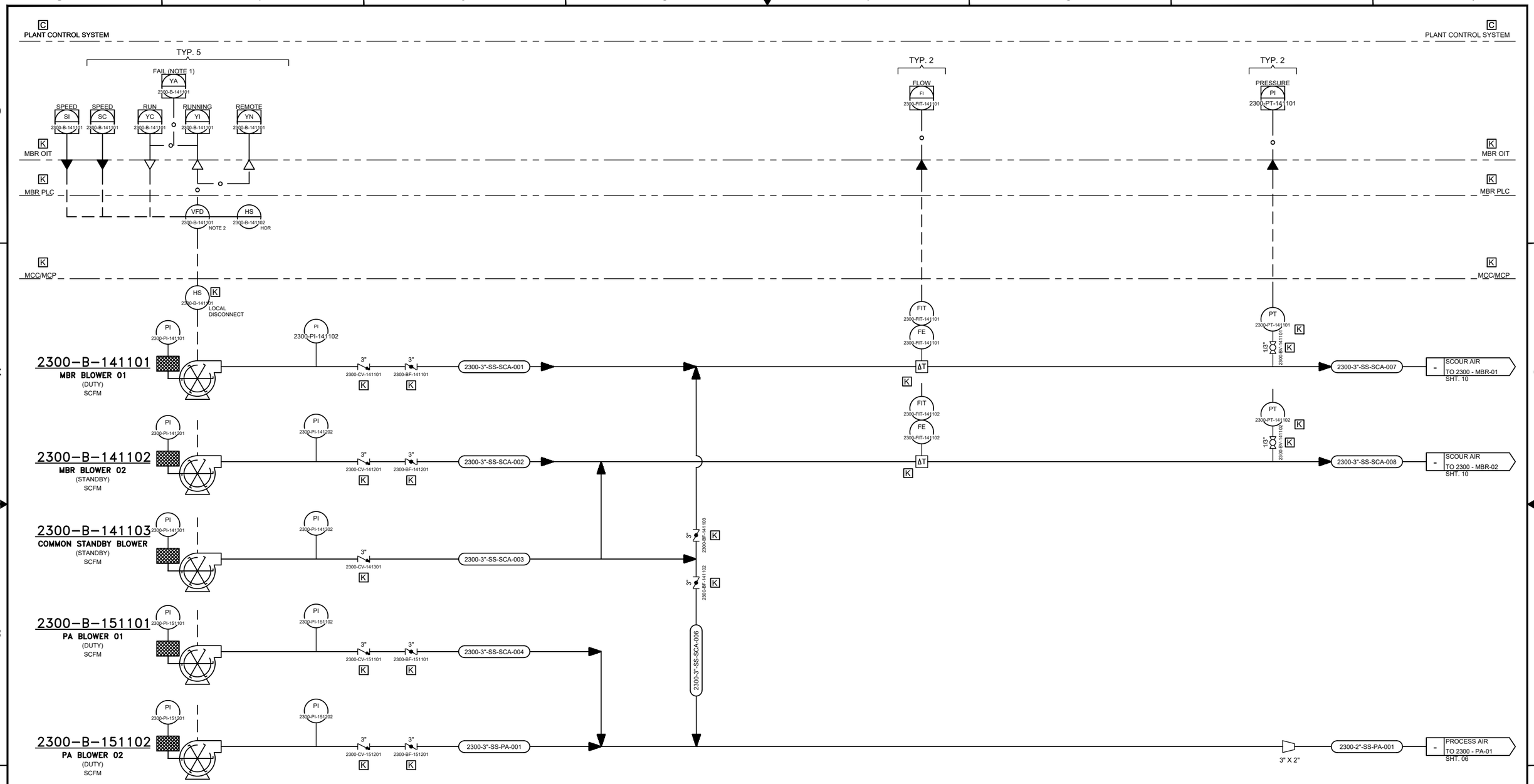

K PROVIDED BY KUBOTA

C PROVIDED BY OTHERS/CONTRACTOR

For Earth, For Life
Kubota

KUBOTA Water & Environment USA Corp.
19910 North Creek Parkway S. Suite 100
Bothell, WA 98011 USA
Tel: +1 425 898 2858

REVISIONS			
REV	DESCRIPTION	DATE	APPROVED

DRAWN DRG	DATE 12/25	HONDAH WWTP WHITERIVER, AZ 2300-MBR BLOWERS	
CHECKED –	DATE –		
APPROVED –	DATE –	SIZE D / CONTRACT NO. – / DRAWING NO. I-14	REV. D
APPROVED –	DATE –	SCALE N/A	SHEET NO. 14-of-21

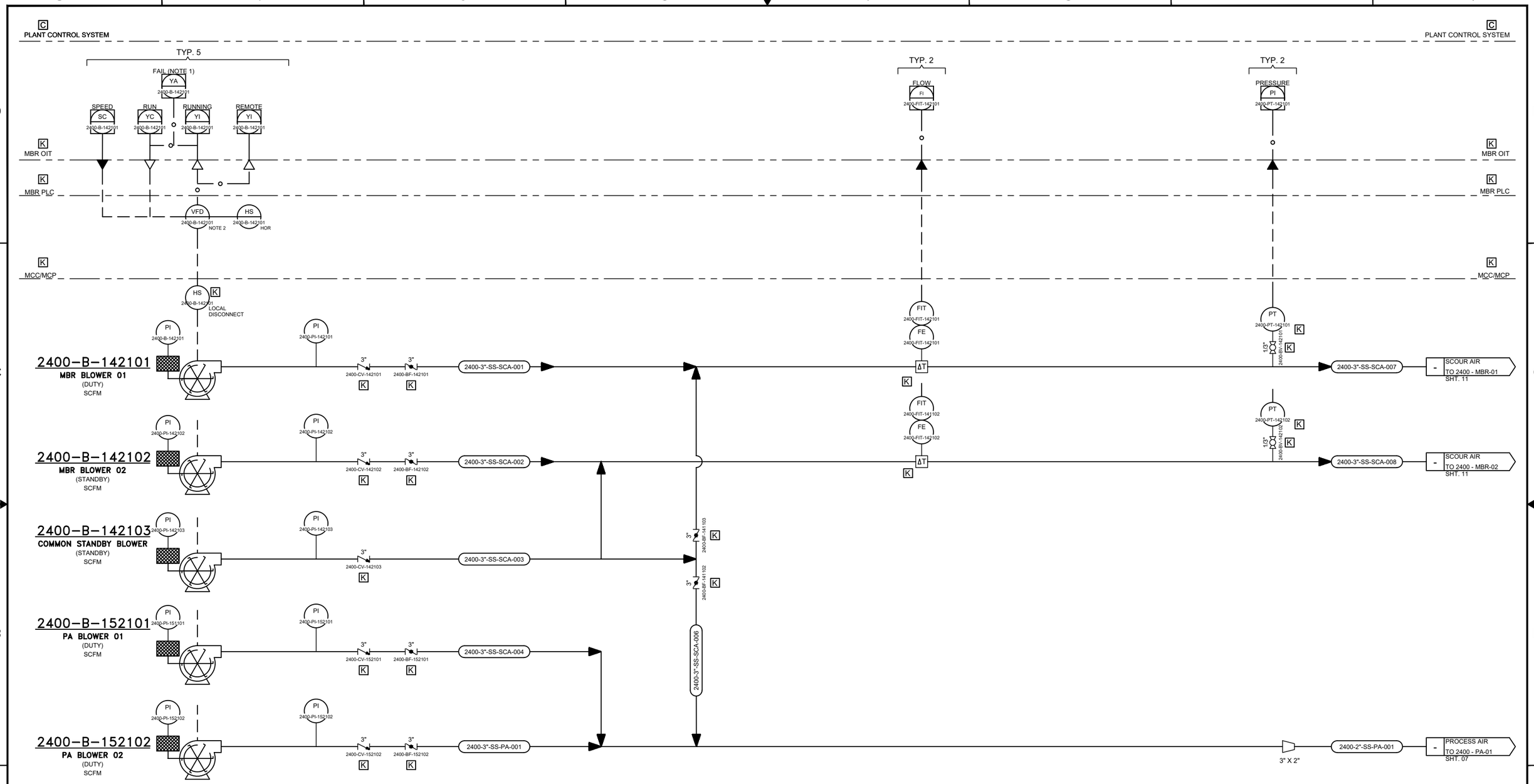

K PROVIDED BY KUBOTA

C PROVIDED BY OTHERS/CONTRACTOR

For Earth, For Life
Kubota

KUBOTA Water & Environment USA Corp.
19910 North Creek Parkway S. Suite 100
Bothell, WA 98011 USA
Tel; +1 425 898 2858

REVISIONS			
REV	DESCRIPTION	DATE	APPROVED

DRAWN	DRG	DATE	12/25
CHECKED	–	DATE	–
APPROVED	–	DATE	–
APPROVED	–	DATE	–

HONDAH WWTP
WHITERIVER, AZ
2400–MBR BLOWERS

SIZE	CONTRACT NO.	DRAWING NO.	REV.
D	–	I–15	D

SCALE	SHEET NO.
N/A	15–of–21

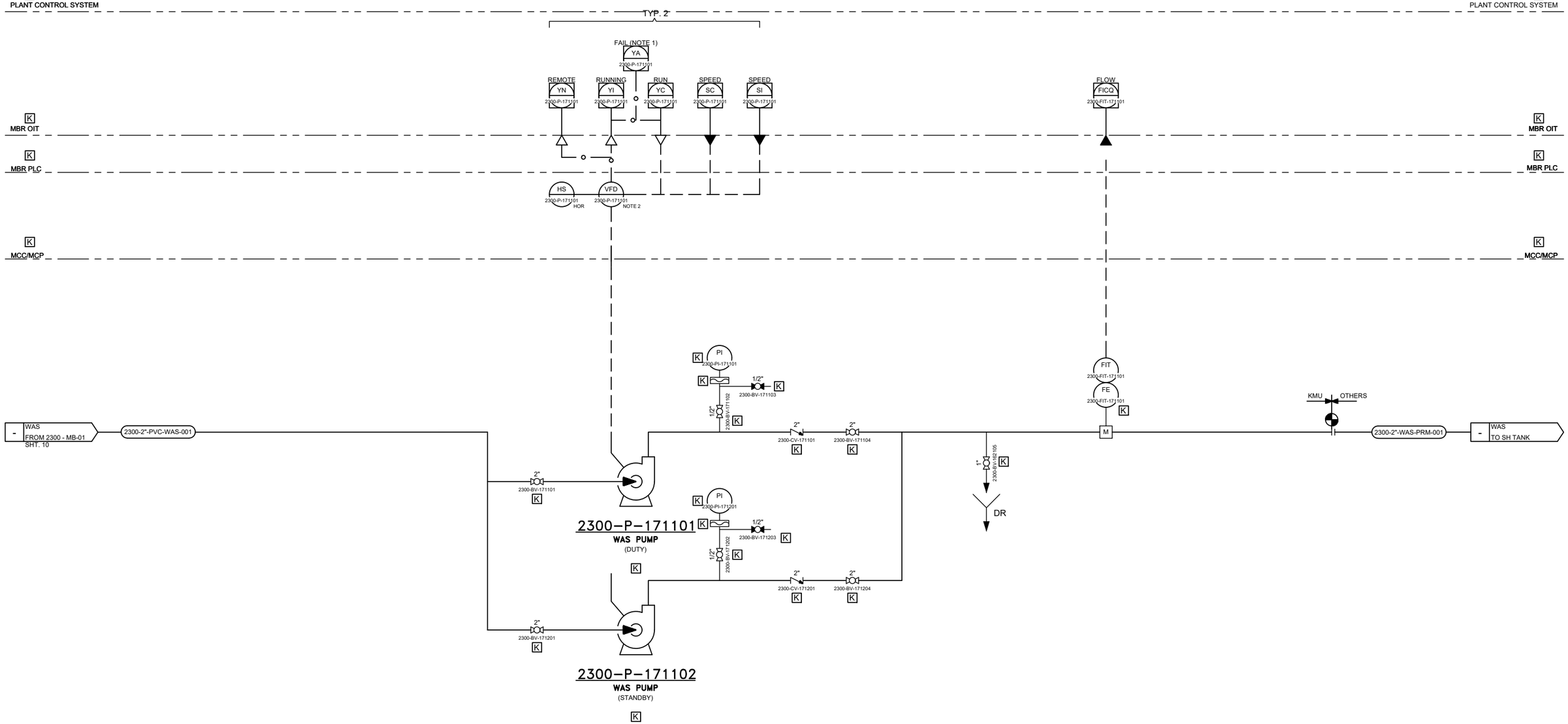

K PROVIDED BY KUBOTA

C PROVIDED BY OTHERS/CONTRACTOR

For Earth, For Life
Kubota

KUBOTA Water & Environment USA Corp.
19910 North Creek Parkway S. Suite 100
Bothell, WA 98011 USA
Tel: +1 425 898 2858

REVISIONS			
REV	DESCRIPTION	DATE	APPROVED

DRAWN DRG	DATE 12/25		
CHECKED –	DATE –		
APPROVED –	DATE –		
APPROVED –	DATE –		

HONDAH WWTP
WHITERIVER, AZ
2300–WASTE ACTIVATED SLUDGE

SIZE	CONTRACT NO.	DRAWING NO.	REV.
D	–	I–16	D

SCALE	SHEET NO.
N/A	16–of–21

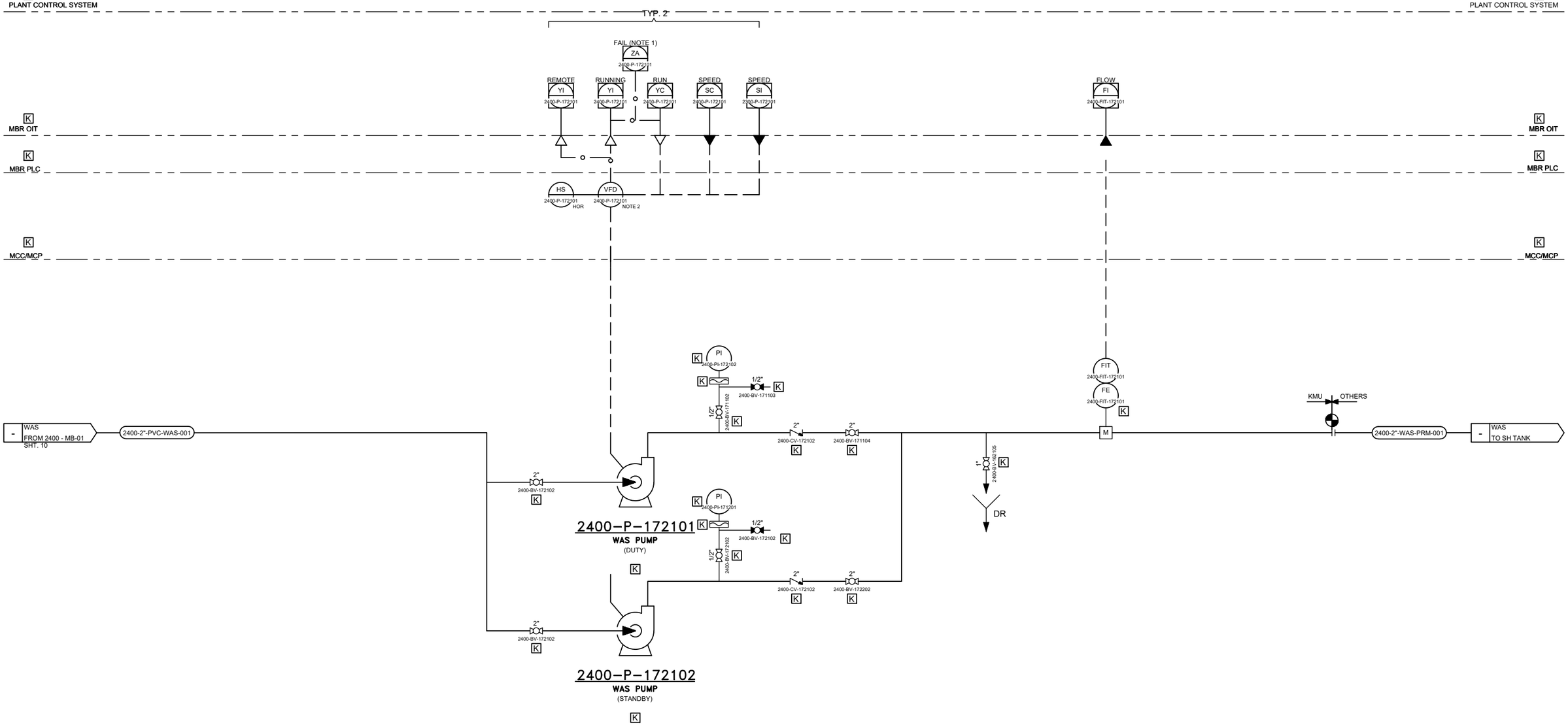

K PROVIDED BY KUBOTA

C PROVIDED BY OTHERS/CONTRACTOR

For Earth, For Life
Kubota

KUBOTA Water & Environment USA Corp.
19910 North Creek Parkway S. Suite 100
Bothell, WA 98011 USA
Tel: +1 425 898 2858

REVISIONS			
REV	DESCRIPTION	DATE	APPROVED

DRAWN DRG	DATE 12/25	HONDAH WWTP WHITERIVER, AZ 2400–WASTE ACTIVATED SLUDGE	
CHECKED –	DATE –		
APPROVED –	DATE –	SIZE D / CONTRACT NO. – / DRAWING NO. I–17	REV. D
APPROVED –	DATE –	SCALE N/A	SHEET NO. 17–of–21

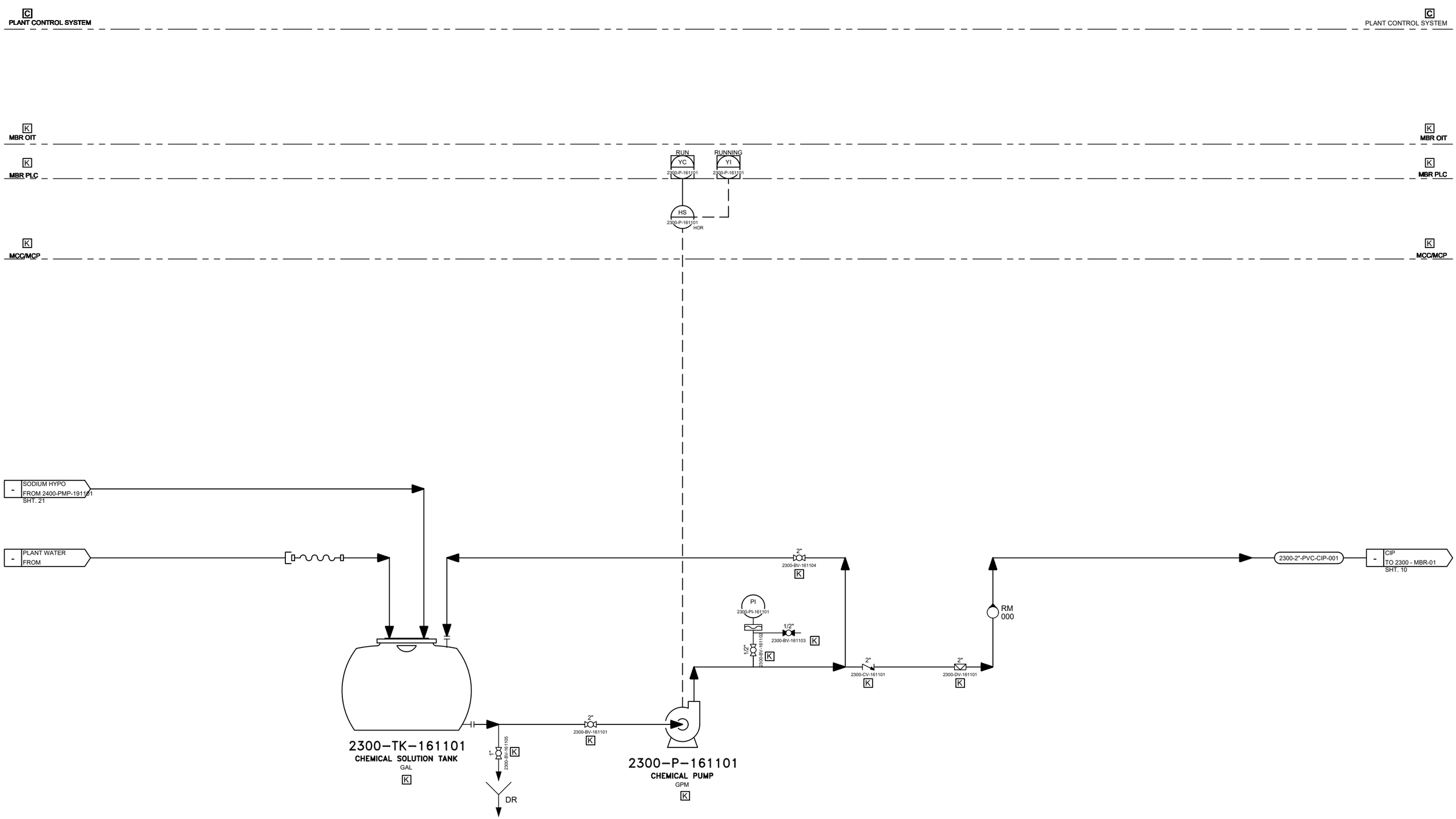

K PROVIDED BY KUBOTA

C PROVIDED BY OTHERS/CONTRACTOR

For Earth, For Life
Kubota

KUBOTA Water & Environment USA Corp.
19910 North Creek Parkway S. Suite 100
Bothell, WA 98011 USA
Tel: +1 425 898 2858

REVISIONS			
REV	DESCRIPTION	DATE	APPROVED

DRAWN DRG	DATE 12/25	HONDAH WWTP WHITERIVER, AZ 2300–CIP SYSTEM	
CHECKED –	DATE –		
APPROVED –	DATE –	SIZE D	CONTRACT NO. – / DRAWING NO. I–18 / REV. D
APPROVED –	DATE –	SCALE N/A	SHEET NO. 18–of–21

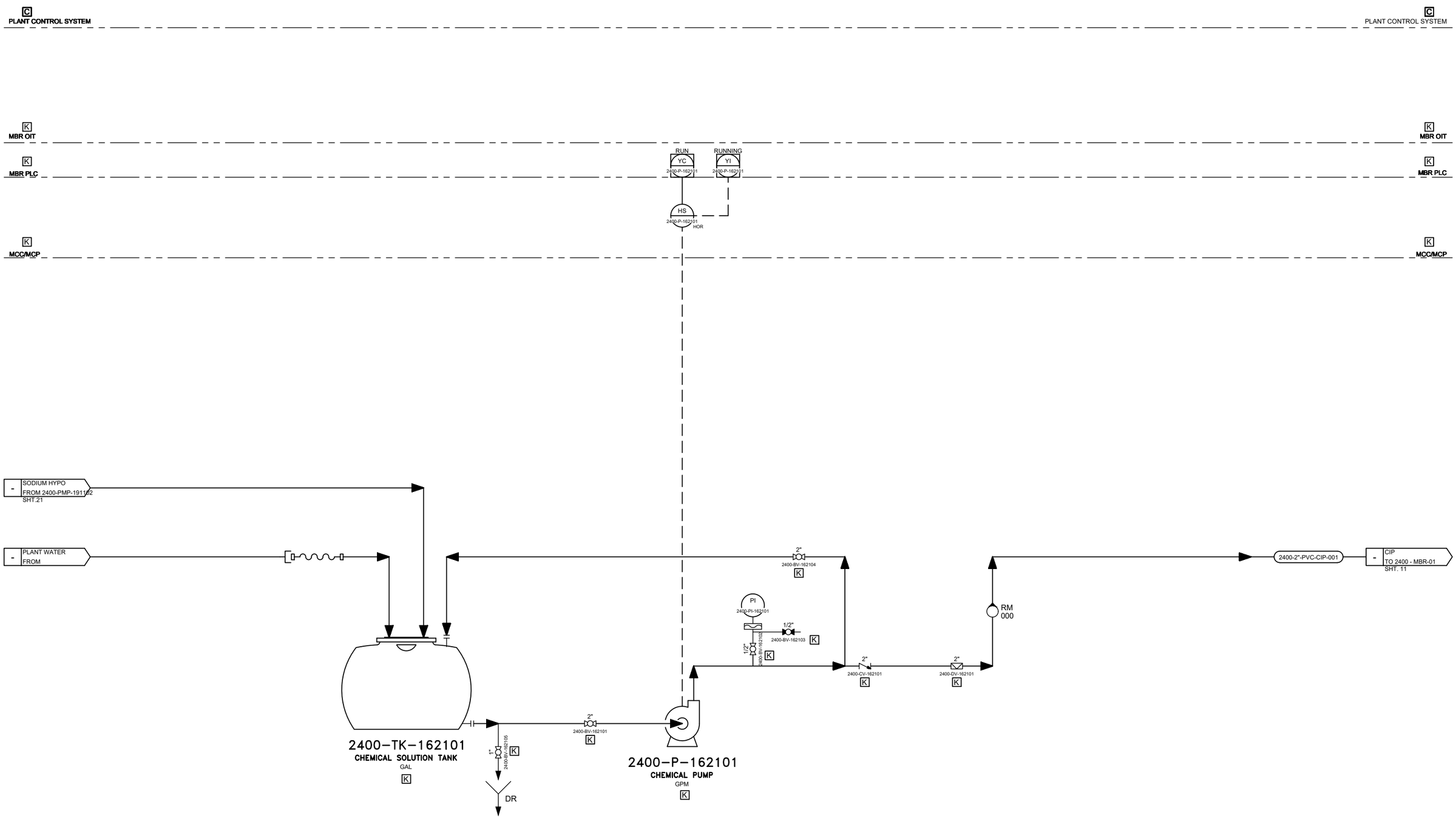

K PROVIDED BY KUBOTA

C PROVIDED BY OTHERS/CONTRACTOR

For Earth, For Life
Kubota

KUBOTA Water & Environment USA Corp.
19910 North Creek Parkway S. Suite 100
Bothell, WA 98011 USA
Tel: +1 425 898 2858

REVISIONS			
REV	DESCRIPTION	DATE	APPROVED

DRAWN DRG	DATE 12/25
CHECKED –	DATE –
APPROVED –	DATE –
APPROVED –	DATE –

HONDAH WWTP
WHITERIVER, AZ
2400–CIP SYSTEM

SIZE	CONTRACT NO.	DRAWING NO.	REV.
D	–	I–19	D

SCALE	SHEET NO.
N/A	19–of–21

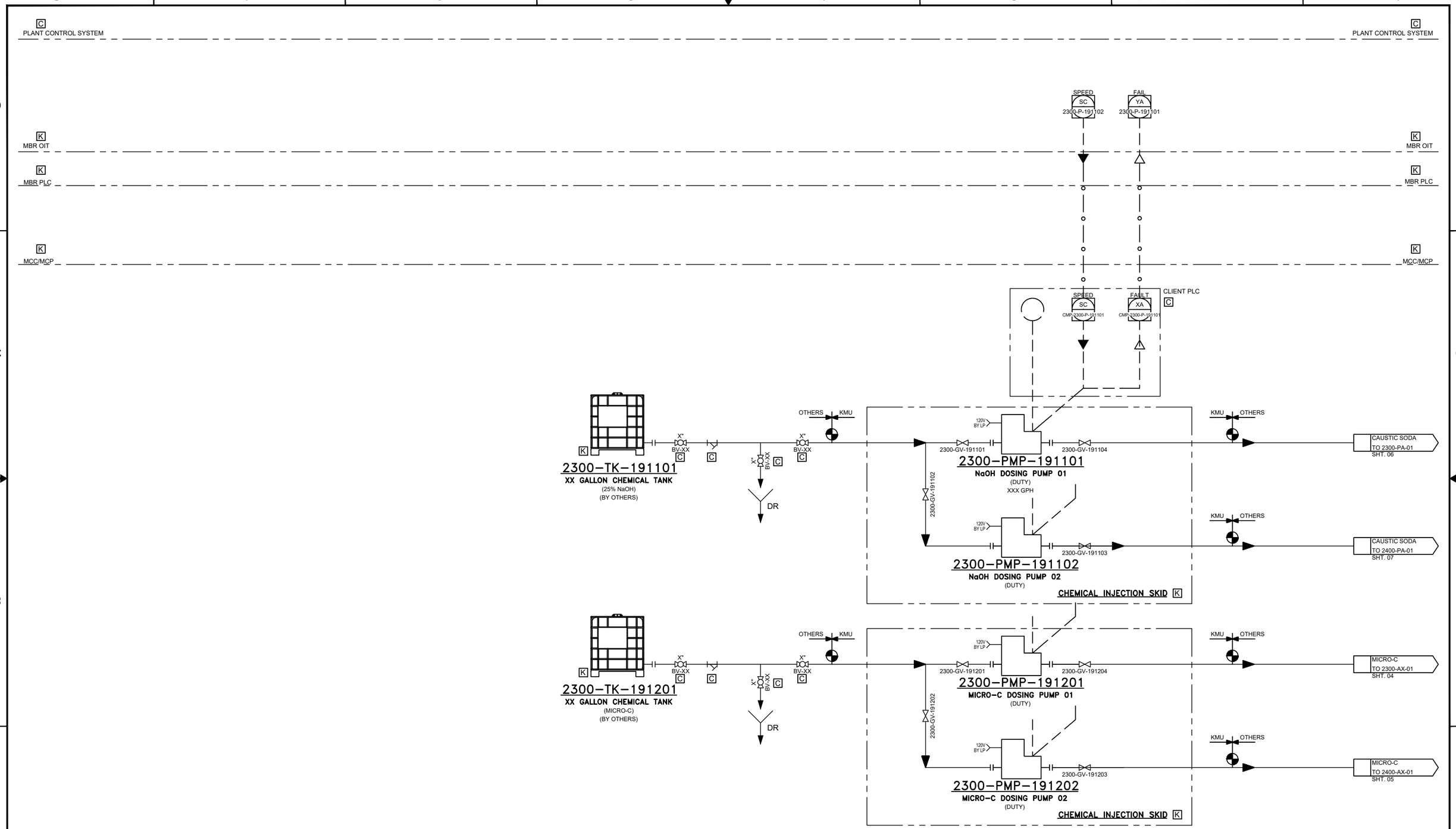

K PROVIDED BY KUBOTA

C PROVIDED BY OTHERS/CONTRACTOR

For Earth, For Life
Kubota

KUBOTA Water & Environment USA Corp.
19910 North Creek Parkway S. Suite 100
Bothell, WA 98011 USA
Tel: +1 425 898 2858

REVISIONS			
REV	DESCRIPTION	DATE	APPROVED

DRAWN DRG	DATE 12/25	HONDAH WWTP WHITERIVER, AZ NaOH AND MICRO C	
CHECKED –	DATE –		
APPROVED –	DATE –	SIZE D / CONTRACT NO. – / DRAWING NO. I-20	REV. D
APPROVED –	DATE –	SCALE N/A	SHEET NO. 20-of-21

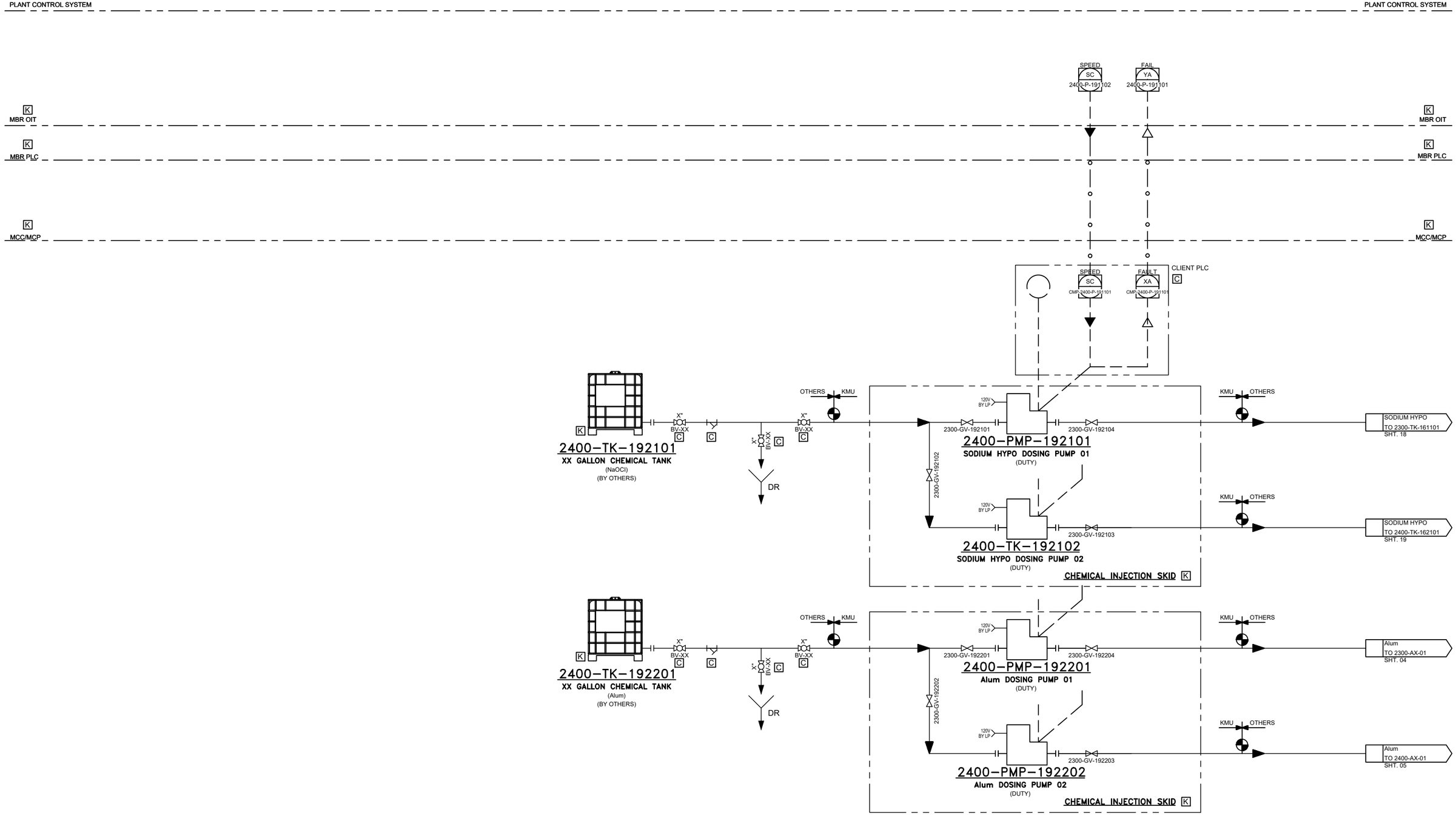

K PROVIDED BY KUBOTA

C PROVIDED BY OTHERS/CONTRACTOR

For Earth, For Life
Kubota

KUBOTA Water & Environment USA Corp.
19910 North Creek Parkway S. Suite 100
Bothell, WA 98011 USA
Tel: +1 425 898 2858

REVISIONS			
REV	DESCRIPTION	DATE	APPROVED

DRAWN DRG	DATE 12/25	HONDAH WWTP WHITERIVER, AZ NaOCl AND ALUM	
CHECKED –	DATE –		
APPROVED –	DATE –	SIZE D / CONTRACT NO. – / DRAWING NO. I-21	REV. D
APPROVED –	DATE –	SCALE N/A	SHEET NO. 21-of-21

SECTION 460754.02 – DES: CHEMICAL FEED SKIDS – WWTP

PART 1 - GENERAL

1.1 DESCRIPTION

A. The MBR Membrane Supplier shall furnish, install, test, and place in satisfactory operation, as shown on related Plans and as specified herein, chemical feed skids, complete with all appurtenances, accessories, and recommended spare parts necessary for a complete and workable installation.

1.2 SUBMITTALS

A. Submit shop drawings, manufacturer literature, diffuser layout drawings, and O&M Manuals as required in Section 013300, SUBMITTAL PROCEDURES, and Section 430754, PACKAGE MBR SYSTEM – GENERAL-WWTP, including parts lists and recommended spare parts.

PART 2 - MATERIALS

2.1 MANUFACTURER

A. Chemical feed skids shall be by Blue-White or approved equal.

2.2 EQUIPMENT

A. Skid
   1. Skids shall be simplex or duplex as indicated below with adequate space for all piping and equipment.
   2. Skid shall include a minimum ½” drip lip.
   3. At a minimum., skid components shall include calibration column, diaphragm-type back pressure/anti-syphon valve, and diaphragm-type pressure relief valve.

B. Pumps and all wetted components shall be compatible with the pumped materials.

C. Pumps for the Hospital WWTP shall be as follows:
   1. Alum – Three BAA-Compliant simplex Blue-White skids.
      a. CFPS-1 with A1 FLEXFLO® Peristaltic Metering Pump; capacity 25 gpd each.
   2. MicroC 2000 – Three BAA-Compliant simplex Blue-White skids.
      a. CFPS-1 with A1 FLEXFLO® Peristaltic Metering Pump; capacity 28 gpd each.
   3. NaOH – Three BAA-Compliant simplex Blue-White skids.
      a. CFPS-1 with A1 FLEXFLO® Peristaltic Metering Pump; capacity 20 gpd each.
   4. NaOCl – One BAA-Compliant duplex Blue-White skid.
      a. Two A2 FLEXFLO® Peristaltic Metering Pumps; capacity 15 gph each.

D. Pumps for the Hon-Dah WWTP shall be as follows:
   1. Alum – Two BAA-Compliant simplex Blue-White skids.
      a. CFPS-1 with A1 FLEXFLO® Peristaltic Metering Pump; capacity 11 gpd each.
   2. MicroC 2000 – Two BAA-Compliant simplex Blue-White skids.
      a. CFPS-1 with A1 FLEXFLO® Peristaltic Metering Pump; capacity 11 gpd each.

3. NaOH – Two BAA-Compliant simplex Blue-White skids.
   a. CFPS-1 with A1 FLEXFLO® Peristaltic Metering Pump; capacity 20 gpd each.
4. NaOCl – One BAA-Compliant duplex Blue-White skid.
   a. Two A2 FLEXFLO® Peristaltic Metering Pumps; capacity 15 gph each.

PART 3 - EXECUTION (NOT USED)

END OF SECTION

SECTION 46115 – SLUDGE DEWATERING SYSTEM – GENERAL – WWTP

PART 1 - GENERAL

1.1 WORK INCLUDED

A. This section covers the work necessary to furnish and install, complete and ready for operation, the sludge dewatering system including a volute press, polymer blending system, dewatered sludge screw conveyor, and accessories for sludge dewatering system as specified herein and in the Detail Equipment Specifications (DES). The dewatering press manufacturer shall supply the complete volute press unit, polymer blending system, screw conveyor, control panel, and accessories and shall provide overall responsibility and coordination for these items and the programing of the control panel for the corresponding pumps.

B. The equipment shall be installed in compliance with all OSHA, local, state and federal codes and regulations.

C. Related Sections:
1. Section 461155.01, DES: VOLUTE PRESS-WWTP
2. Section 461155.02, DES: POLYMER BLENDING SYSTEM-WWTP
3. Section 461155.03, DES: SCREW CONVEYOR-WWTP
4. Section 461155.04, PCN: SLUDGE DEWATERING SYSTEM-WWTP
5. Division 40, PROCESS INTERCONNECTIONS-WWTP
6. Division 26, ELECTRICAL-WWTP
7. P&ID Drawings

1.2 EQUIPMENT NUMBERS

A. Hospital WWTP

Equipment #	Description
1730-SP-03	Volute Press See Section 461155.01
1730-PBS-02	Polymer Blending System See Section 461155.02
1730-SC-04	Screw Conveyor See Section 461155.03
LCP-1730-01	Sludge Dewatering System Control Panel

B. Hon-Dah WWTP

Equipment #	Description
2730-SP-03	Volute Press See Section 461155.01
2730-PBS-02	Polymer Blending System See Section 461155.02
2730-SC-04	Screw Conveyor See Section 461155.03
LCP-2730-01	Sludge Dewatering System Control Panel

1.3 GENERAL

A. All like items of equipment specified hereunder shall be the end products of one manufacturer in

order to achieve standardization for operation, maintenance, spare parts, and manufacturer's services.

B. See the GENERAL CONDITIONS and Division 01, GENERAL REQUIREMENTS, which contain information and requirements that apply to the work specified herein and are mandatory for this project.

C. All equipment shall be compliant with Federal Acquisition Register the clause 52.225-11, Buy American-Construction Materials under Trade Agreements (Nov 2023) and provision 52.225-12, Notice of Buy American Requirement-Construction Materials under Trade Agreements (May 2014).

1.4 MANUFACTURERS' SERVICES

A. See Section 019113, GENERAL COMMISSIONING REQUIREMENTS.

B. A qualified Manufacturer's representative for the equipment specified herein shall be present at the jobsite and/or classroom designated by the Owner for the minimum person-days listed, travel time excluded. Provide the following services for each WWTP in a minimum of two trips with a minimum of 4 days per trip:
   1. 1 person-day for installation assistance, inspection and certification of the installation.
   2. 1 person-days for functional testing.
   3. 1 person-day for pre-startup classroom or jobsite training.
   4. 1 person-days for performance testing.

C. A qualified Manufacturer's representative shall be one who has at least 2 years' experience in the installation of the types of equipment specified. At completion of the installation, the Manufacturer's representative shall issue a certificate showing that the installation is as specified and is acceptable to the manufacturer.

D. At completion of the installation, the Manufacturer's representative shall issue a certificate showing that the installation is as specified and is acceptable to the Manufacturer.

E. Startup services and training of Owner's personnel shall be at such times as requested by the Owner.

F. If there are difficulties in operation of the equipment due to the Manufacturer's fabrication and/or programming or Contractor's installation, additional service shall be provided at no extra cost to the Owner.

G. The Manufacturer shall have the services of the programmer responsible for programming the sludge dewatering system readily available. The services of the programmer shall be provided to assist the Owner's programmer with programming and troubleshooting of the sludge dewatering system software program as well as coordinate with monitoring for the plant SCADA system. The programmer must have complete knowledge of proper sludge dewatering system operation and of the sludge dewatering system software programs supplied in this section.

1.5 SUBMITTALS

A. Submittals shall be made as required in Section 013300, SUBMITTAL PROCEDURES and the detailed equipment specification. In addition, the following specific information shall be provided:
   1. Complete Product Data including make, model and weight of equipment.
   2. Description of the equipment, controls, and accessories in detail and any exceptions to the Specifications.
   3. Shop drawings showing important details of construction dimensions, anchor bolt locations, and field connections. All dimensions shall be in U.S. English units of measure.
   4. Complete motor data and list of special motor features including speed, horsepower, capacity, efficiency, and range of operation.
   5. Manufacturer's installation, operation, and start-up procedures including lubrication requirements.

a. Complete equipment installation manuals including information on field erection and installation requirements that are useful to the Contractor during construction. Information shall include the total weight of assembled components and weight of the large components that may require removal during the life of the equipment or assembly during construction, any required installation tolerances, and instruction on operation.

6. Engineered shop drawings of the provided control panels including but not limited to panel layouts, wiring diagrams in the form of ladder logic diagrams, interconnection diagrams, bills of material and equipment data sheets. The description of operation shall be included. Custom electrical drawings for this application to facilitate and ensure accurate field connections to the control panel. Show all landings or connections that must be completed in the field.
7. PLC communication datamap.
8. Manufacturer's warranty.
9. Manufacturer's list of recommended spare parts with current pricing to be purchased with equipment.
10. Qualifications of Manufacturer's certified representative.

1.6 QUALITY ASSURANCE

A. Manufacturers' Qualifications: The manufacturer shall have a minimum of five (5) years' experience in producing sludge dewatering volute press equipment and shall produce evidence of at least five (5) installations of similar size in satisfactory operation in the United States.

B. The equipment furnished shall be designed and constructed in accordance with the best practices and methods and shall operate satisfactorily when installed as shown on the Contract Drawings and operated per the manufacturer's recommendations.

C. All equipment covered herein shall be furnished by one system Manufacturer and shall include all necessary appurtenances for a complete and working system. The Manufacturer shall have the sole responsibility for the proper functioning and coordination of the equipment as furnished.

1.7 REFERENCE SPECIFICATIONS, CODES AND STANDARDS

A. All motors and/or electrical equipment shall be designed and constructed in complete accordance with the latest edition and revision of all applicable codes and regulations, including the following:
1. Institute of Electrical and Electronic Engineers (IEEE)
2. National Electrical Manufacturers Association (NEMA)
3. National Electrical Code (NEC)

B. All mechanical components shall be designed and constructed in accordance with the latest edition and revision of all applicable codes and regulations, including the following:
1. American Society for Testing Materials (ASTM)
2. American National Standards Institute (ANSI)
3. American Iron and Steel Institute (AISI)
4. American Gear Manufacturers Association (AGMA)
5. Occupational Safety and Health Act (OSHA)
6. American Welding Society (AWS)
7. American Institute of Steel Construction (AISC)
8. Anti-Friction Bearing Manufacturers Association (AFBMA)

1.8 WARRANTY

A. The Manufacturer shall warrant that its equipment shall be free from defects in material and workmanship; and that it will replace or repair, any part or parts for which examination shall show to have failed under normal use and service by the Owner within one (1) year following the date of Substantial Completion.

1. The Manufacturer shall be responsible for freight and labor associated with shipping defective equipment to the factory or certified repair facility.

1.9 OPERATION AND MAINTENANCE MANUALS

A. Operation and Maintenance Manuals and Maintenance Summary Sheets for the equipment specified herein shall be furnished as specified in Section 017700, CLOSEOUT PROCEDURES. Any revisions during start-up or operating instructions shall be made in each of the final copies of the Operation and Maintenance Manuals.

B. The O&M manuals shall contain at a minimum full descriptions of all equipment specified herein, motor data, spare parts lists, and detailed instructions for all operation and maintenance tasks to be performed by the operator.

C. A spare manual shall be shipped with the equipment in order to allow for proper installation and operation of the equipment prior to the release of all final installation, operation, and maintenance manuals. Manuals shall include:
   1. Contact name, address, and telephone number of the equipment manufacturer's Service Department and Parts Department.
   2. Complete connection, interconnecting and assembly diagrams.
   3. Approved shop drawings including complete electrical information.

PART 2 - PRODUCTS

2.1 GENERAL

A. "Basis-of-Design Products:" The first named Manufacturer's system was used as the Basis of Design for this Specification and the Drawings. The structures and facilities appurtenant to the sludge dewatering system shall meet the basis of design in quality and capacity. Equipment furnished by all qualified, interested Manufacturers will be considered, provided the necessary structural, electrical, and mechanical changes are submitted in conformance with the requirements of the GENERAL CONDITIONS and DIVISION 01, GENERAL REQUIREMENTS. The Contractor shall be responsible for all design changes associated with other Manufacturers' equipment and shall bear all costs for necessary changes for a complete and satisfactory installation.

B. Nameplates with the name of the Manufacturer, equipment model number and all other pertinent data shall be affixed at a visible and accessible location on all equipment.

2.2 SLUDGE DEWATERING VOLUTE PRESS

A. The sludge dewatering volute press and appurtenances are specified in this Section and Section 461155.01, DES: VOLUTE PRESS-WWTP.

2.3 SLUDGE DEWATERING POLYMER BLENDING SYSTEM

A. The sludge dewatering polymer blending system and appurtenant equipment is specified in this Section and Section 461155.02, DES: POLYMER BLENDING SYSTEM-WWTP.

2.4 DEWATERED SLUDGE SCREW CONVEYOR

A. The screw conveyor and appurtenant equipment is specified in Section 461155.03, DES: SCREW CONVEYOR-WWTP.

2.5 SYSTEM ACCESSORIES

A. Identification Plate: An identification plate shall be securely mounted on each unit in a readily visible location. The plate shall provide Manufacturer with phone number, model number, and serial number.

B. Lifting Lugs: Equipment weighing over 100 pounds shall be provided with lifting lugs.

2.6 INSTRUMENTS AND ELECTRICAL DEVICES

A. Provide all instruments and electrical devices as indicated on the Drawings, specified in this Section, in the related sections listed hereinbefore, and as required for the operation of the system

B. Control panels and electronic communication devices must comply with all US Federal regulations.

C. Refer to Division 40, PROCESS INTERCONNECTIONS, for additional information and requirements.

D. Electrical device interconnecting conduit and wiring shall be the responsibility of the Manufacturer for skid mounted equipment. Power supply for the equipment shall be from LCP-1730-01 at the Hospital WWTP and LCP-2730-01 at the Hon-Dah WWTP. In addition to the drive motor, the following electrical devices shall be furnished with the unit:

1. The Level Switch and Solenoid Valve shall be supplied in accordance with the detailed equipment specification Section 461155.01, DES: VOLUTE PRESS.
2. Polymer Blending System and Storage Drum Accessories shall be supplied in accordance with the detailed equipment specification Section 461155.02, DES: POLYMER BLENDING SYSTEM. Skid manufacturer shall provide stub out for controls and power wiring and conduit.
3. E-Stop Cord/Switch, E-Stop Pushbutton, and Zero Speed Switch shall be supplied in accordance with the detailed equipment specification Section 461155.03, DES: SCREW CONVEYOR. Skid manufacturer shall provide stub out for controls and power wiring and conduit.

E. Short circuit protection for system components shall be provided. Individual motor thermal overload protection shall be provided.

2.7 CONTROL SYSTEM

A. The dewatering system Manufacturer shall supply the sludge dewatering system control panel (LCP-1730- 01 at the Hospital WWTP and LCP-2730- 01 at the Hon-Dah WWTP), which will control the sludge pump, polymer blending system, volute press, and dewatered sludge screw conveyor. The control panel shall be located on the volute press skid in the solids handling area. Control panels and electronic communication devices must comply with all US Federal regulations.

1. Control items provided with the equipment specified in this Section shall provide complete manual and automatic operation of the sludge dewatering process with protection against conditions which might damage the equipment. The sludge dewatering system Manufacturer is responsible for the proper operational control of the equipment.
2. The control panel shall consist of all digital displays, potentiometers, switches, lights, relays, and other control devices required for a complete operable system.

B. Panel Enclosure: The sludge dewatering system control panel shall be a UL primary control panel in a NEMA 3R, type 304 stainless steel enclosure with thermostat and ventilation fan, skid mounted. The panel shall be a totally enclosed, front access type with indicating devices and switches mounted on the front door. The door(s) shall be lockable and fitted with a pneumatic hold open device. The control panel shall be maximum 36 inches wide by 12 inches deep with height sized to house all required equipment. At the Hospital WWTP it shall be labeled: “Sludge Dewatering System Control Panel LCP-1730- 01.” At the Hon-Dah WWTP it shall be labeled: “Sludge Dewatering System Control Panel LCP-2730- 01.”

C. Motor Starters and VFDs: The control panel shall house variable frequency drives (VFDs) for polymer pump, polymer mixer, flash mixer, floc mixer, and volute press motor. It shall house a motor starter for the screw conveyor. The VFDs and motor starters shall be provided by the Sludge Dewatering System Manufacturer in accordance with Division 26. The VFDs shall be selected to match motor size, current and torque requirements.

D. The system shall be controlled and monitored by a PLC and Operator Interface Terminal (OIT) installed in LCPs. Refer to Sections 406140 through 406191 for more information and requirements about connection to the Plant Control System. PLC shall be Allen Bradley CompactLogix Model 5069-L306, or equal. OIT shall be Allen Bradley Model Panel View 5310, or equal.

E. Power: The control panel shall accept a 480 volt, 60 hertz, 3 phase AC power input. When the disconnect is in the open position, all power shall be removed from the control system. A transformer shall be included that will provide 120 volts, AC for the polymer blending system and control system.

F. Control panel programming at both the Hospital and Hon-Dah WWTPs, shall be as detailed in the process control narrative (PCN) in Section 461155.04, DES: PROCESS CONTROL NARRATIVE-WWTP.

G. Coordinate with TCP/IP address and Ethernet equipment as per Division 40.

H. For both the Hospital and Hon-Dah WWTPs, the equipment Manufacturer shall provide the final versions of PLC and HMI programs.

2.8 SEQUENCE OF OPERATION

A. Refer to Section 461155.04, DES: PROCSSS CONTROL NARRATIVE-WWTP

PART 3 - EXECUTION

3.1 PREPARATION FOR SHIPMENT, STORAGE, AND PROTECTION

A. The sludge dewatering system equipment shall be factory assembled, complete with all components specified. Equipment and materials shall be prepared and protected for shipment and shipped in accordance with the requirements of Division 01, GENERAL REQUIREMENTS and the Manufacturer's recommendations.

B. The contractor shall perform any required field assembly. The equipment shall have the necessary lifting lugs to lift the components into place. Components shall be lubricated at the factory as necessary to protect the equipment during shipment and storage.

3.2 FIELD PREPARATION AND PAINTING

A. Shop and field painting shall be in accordance with and as specified in Section 099600, HIGH PERFORMANCE COATINGS-WWTP, for exposed metal and exposed PVC or fiberglass. Shop coating preferred with paint touch-ups on site.

B. The Contractor shall touch up all shipping damage to the paint and stainless steel as soon as the equipment arrives on the job site.

C. The Manufacturer shall supply paint for field touch up and field painting.

D. Electrical motors, speed reducers, and other self-contained or enclosed components shall be factory primed and painted and no field painting shall be necessary except for touchup as required.

E. Prior to assembly the Contractor shall coat all stainless steel bolts and nut threads with a non-seizing compound.

3.3 INSTALLATION

A. The Manufacturer will submit to the Engineer and Contractor, a complete set of equipment installation instructions.

B. Install equipment in accordance with the Manufacturer's recommendations. Mount equipment on concrete bases as shown on the Drawings. The size of the concrete bases shall be determined by the dimensions of the equipment base and shall be as shown on the Drawings. Anchor bolts shall be sized by Manufacturer and provided by the Contractor and material shall be as specified herein. Bolts shall be accurately placed with templates. Coat bolt thread projections with lubricant to facilitate future nut removal.

3.4 FACTORY TESTS

A. All major system components shall be factory tested for compliance with manufacturing and functional requirements by the Manufacturer.

B. The system consisting of the volute press, control panel, and all associated instrumentation shall be tested fully assembled before shipment. The control panel shall be connected to all instruments, motors, and appurtenances. All start/stop and running sequences and all safety and alarm systems for the volute press shall be tested.

C. Balance of Vibration: The rotating parts of all driving units, including the volute conveyor, shall be dynamically balanced before final assembly. The driving units alone shall operate without vibration in excess of the limits stated in the latest revision of NEMA MG 1.

D. Certification of test results will be submitted to the Engineer. The Contractor will be given a copy of all certified test results.

3.5 FUNCTIONAL TESTS

A. Functional testing shall occur in the presence of the Owner and Engineer. The Contractor shall schedule functional testing with the Manufacturer and notify the Owner and Engineer at least two weeks prior to testing.

B. The Contractor shall provide assistance in startup and functional testing of the installed equipment, and access provisions for testing as necessary and required by the Manufacturer.

C. Functional testing of the sludge dewatering system shall include clean water operation of all equipment units including the sludge pumps, as well as the control system. The Contractor shall provide clean water in one of the aerobic digester basins and in the volute press room for use by the polymer system. The clean water level in the digester must be at least 3 feet above the sludge pump suction piping intake.

D. All dewatering system equipment units, including the sludge pumps, shall be operated with clean water pumped from one of the digester basins.
   1. All moving equipment and drives shall be inspected for proper alignment, quiet operation, and vibration. All equipment connections shall be inspected for leaks, properly installed hardware and generally proper operation.
      a. Proper operation will be established by operating all components of the system continuously for at least 4 hours without major faults.
   2. The control system shall be tested for proper overall system coordination, interlocks, alarms, and proper communication with all system components and the Plant Control System as required for a complete and operational control system.

3.6 PERFORMANCE TESTS

A. The performance tests shall determine the actual system operating conditions and verify that the unit meets the minimum requirements specified herein.
   1. At a minimum, sludge cake must meet solids content specified in Section 461155.01, DES: VOLUTE PRESS-WWTP.
   2. At a minimum, solids capture must meet the percentage specified in Section 461155.01, DES: VOLUTE PRESS-WWTP.
   3. At a minimum, throughput must meet the flow rate and solids loading capacity specified in Section 461155.01, DES: VOLUTE PRESS-WWTP.

B. The sludge dewatering system Manufacturer shall determine the polymer type and dose to be used based on sludge samples provided by the Owner. The Manufacturer shall be responsible for sample collection, laboratory testing, and all costs associated with laboratory testing as specified below. A Manufacturer's representative shall be present for the entirety of the performance testing and shall coordinate operation of the sludge dewatering system with the Owner.

C. The Owner shall provide the Manufacturer-specified polymer. The system shall use digested sludge and non-potable water as produced by the treatment process. The Owner shall dispose of sludge cake.

D. The performance testing shall be for a period of 2 consecutive days for a total period of 4 hours.
   1. Sludge pump rate and polymer dosing shall be determined by the Manufacturer's representative in the presence of the Owner and Engineer.

E. Sampling
   1. During each day of the performance test run, a minimum of 4 rounds of samples shall be collected by the Manufacturer's representative with the first round taken no later than 30 minutes after equipment startup. The following samples shall be tested and analyzed for each sampling round:
      a. Sludge feed – percent total solids.
      b. Sludge feed rate – gallons per minute.
      c. Pressate – concentration TSS (mg/L).
      d. Solids Capture – percent.
      e. Cake - percent total solids.
      f. Polymer feed rate – pounds active polymer per dry ton of solids
   2. All analyses shall be performed by a certified laboratory of the Owner's choice.

F. Interpretation of Results
   1. All data collected during performance tests shall be made available to the Engineer for determining compliance with the Specifications.
   2. The average daily value of each test parameter shall meet or exceed the performance criteria. Test data that are questionable or in apparent error will be discarded; however, at least six (6) sample results from each of the two consecutive days must be used to determine an acceptable value (minimum of 12 total sample results).
   3. The Engineer will notify the Manufacturer in writing, within five (5) days of receipt of the last test results, whether or not the equipment has demonstrated acceptable performance.
   4. In the event the equipment does not meet the guaranteed performance, the Manufacturer shall modify or replace the equipment until it meets these requirements, and the acceptance test shall be repeated until successfully completed.

3.7 MANUFACTURER'S CERTIFICATE(S)

A. Provide Manufacturer's certificate(s) of proper installation in accordance with Section 019113, GENERAL COMMISSIONING REQUIREMENTS of Division 01, GENERAL REQUIREMENTS.
   1. Certificate shall include all recorded field testing results and data.

END OF SECTION

SECTION 461155.01 – DES: VOLUTE PRESS – WWTP

PART 1 - GENERAL

1.1 WORK INCLUDED

A. See Section 461155, SLUDGE DEWATERING SYSTEM – GENERAL-WWTP, for additional requirements.

B. This section specifies the sludge dewatering volute press to be furnished and installed in the Solids Building as part of the sludge dewatering system. All appurtenant items as described herein shall also be provided.

1.2 EQUIPMENT NUMBERS

A. Hospital WWTP

Equipment #	Description
1730-SP-03	Volute Press
1730-SV-03	Wash Solenoid
1730-FM-03	Flash Mixer
1730-FLM-03	Flocculation Mixer
1730-LSH-03	Flocculation Tank Level Switch
1730-LIT-03	Flash Mix Tank Level Sensor
1730-M-3-1,2	Sludge Dewatering Drum Motors

B. Hon-Dah WWTP

Equipment #	Description
2730-SP-03	Volute Press
2730-SV-03	Wash Solenoid
2730-FM-03	Flash Mixer
2730-FLM-03	Flocculation Mixer
2730-LSH-03	Flocculation Tank Level Switch
2730-LIT-03	Flash Mix Tank Level Sensor
2730-M-3-1,2	Sludge Dewatering Drum Motors

PART 2 -

PART 3 - PRODUCTS

3.1 GENERAL

A. Both the Hospital and Hon-Dah plants shall have one (1) sludge dewatering volute press shall be furnished to dewater sludge by means of mixing the sludge with polymer, flocculating, and pressing the sludge to reach a higher solids content. The dewatering volute press shall receive, dewater, and thicken sludge from the aerobic digester, allowing pressate to pass through the openings in the press volute. Angled flights on the inside of the drum will press and convey the thickened sludge towards the discharge end of the drum. The thickened sludge will exit the volute and be directed into the hopper of the dewatered sludge conveyor, detailed in Section 461155.03, DES: SCREW CONVEYOR-WWTP.

B. The Sludge Dewatering System shall be installed as recommended by the manufacturer and shown on the Drawings.

3.2 EQUIPMENT MODEL

A. Hospital WWTP
   1. PW Tech - Model ES-302 Volute (2 drums installed).
   2. Or Approved Equal.

B. Hon-Dah WWTP
   1. PW Tech - Model ES-302 Volute (2 drums installed).
   2. Or Approved Equal.

3.3 DESIGN REQUIREMENTS

A. The sludge dewatering system shall be capable of dewatering aerobically digested sludge and producing a solids cake with no free water present.

B. The sludge dewatering volute press system shall be designed for continuous duty and shall be suitable for installation under the following conditions:
   1. Hospital WWTP

Number of Units	1
Maximum Solids Loading Capacity	350 dry lbs/hr
Maximum Hydraulic Capacity	35 gpm
Incoming Solids Concentration Range	0.5 – 2%
Flash Mix Tank Volume (min)	74 gallons
Flash Mix Tank Motor Power	0.4 kW
Flocculation Tank Volume (min)	129 gallons
Flocculation Tank Motor Power	0.4 kW (0.54 hp)
Material of Construction	304 SST
Discharged Solids Concentration	16 – 20%
Solids Capture	≥95%
Scour Water	4 gpm intermittent 10 gph
Polymer Mixing Water Use	30 – 300 gph
Power Supply	480/3/60
Area Classification	Unclassified

2. Hon-Dah WWTP

Number of Units	1
Maximum Solids Loading Capacity	350 dry lbs/hr
Maximum Hydraulic Capacity	35 gpm
Incoming Solids Concentration Range	0.5 – 2%
Flash Mix Tank Volume (min)	74 gallons
Flash Mix Tank Motor Power	0.4 kW
Flocculation Tank Volume (min)	129 gallons
Flocculation Tank Motor Power	0.4 kW (0.54 hp)
Material of Construction	304 SST
Discharged Solids Concentration	16 – 20%
Solids Capture	≥95%
Scour Water	4 gpm intermittent 10 gph
Polymer Mixing Water Use	30 – 300 gph
Power Supply	480/3/60
Area Classification	Unclassified

C. The sludge dewatering volute press provided shall have three stages to include a flash mixing tank, a flocculation tank, and a dewatering drum. The sludge dewatering volute press shall have a self-contained electrical and control panel including control for ancillary equipment the digested sludge pumps and dewatered sludge conveyor as specified in 461155, SLUDGE DEWATERING SYSTEM – GENERAL-WWTP.

D. Equipment furnished under this section shall be suitable for handling municipal sludge. The equipment will be located indoors where the temperature range shall be between 50°F - 98°F. The digested sludge will have a pH which may range from 5.6 to 8.5 (7.0 average). The area is Unclassified.

3.4 SYSTEM DESCRIPTION

A. Drum: The dewatering drums will be constructed of ATSM A36, type 304 stainless steel.
   1. All circular components will be laser cut to ensure maximum evenness of wear and therefore operating life.
   2. Assembly will be undertaken so that all fixed rings are concentric and parallel and equally spaced apart for each section of the dewatering drum. When mounted on the retaining rods and installed, all moving rings will move freely between the fixed rings.

B. Base Frame: The structural support frame shall be fabricated of ASTM type 304 stainless steel members, properly sized for the drum and the maximum expected loads on the equipment. It shall be a rigid structure, braced to adequately withstand intended loads without excessive vibration or deflection. All welding shall conform to the American Welding Society Structural Welding Code. The structure shall be designed for installation on a prepared concrete foundation or suitable flat concrete slab and secured with anchor bolts and lifting lugs at four locations minimum. The construction shall allow easy access and visual inspection of all internal components. The combined length of the tanks and rotating drum shall not exceed 13 feet.

C. Mixing and Flocculation Tanks: Mixing and flocculation tanks will be manufactured in type 304 stainless steel and will be a minimum of 11 gauge. The tanks shall have an integral rotating paddle-type mixer and drive assembly. Tanks and spill containment trays shall be fully welded internally and externally.
   1. Design and manufacture of tanks and spill trays must ensure no leakage or spillage of fluids under normal working conditions. Tank design will minimize the possibility of any short circuiting of flow. Tank size will allow for sufficient residence time for flocculation to occur.

D. Dewatering Drum Spray System: the dewatering drum shall be equipped with individual spray bars. Each spray bar shall consist of a spray pipe fitted with spray nozzles, located above the dewatering drum. The spray pipe and spray nozzle assembly shall be readily removable. A 304 stainless steel pipe manifold with NPT connection shall be provided with a connection for plant NPW water.
   1. Nozzle spacing and spray pattern shall be such that the sprays from adjacent nozzles overlap one another on the dewatering drum surface.
   2. The sprays will operate periodically to remove solids built up externally on the drum such that over time no significant build-up of solids occurs on the drum.
   3. Spray water shall be provided to the equipment at 40 psi and a flow of 4 gpm.
   4. The spray bar shall be fitted with a manual ball valves for manual isolation of the spray bars, and a solenoid valve for automated control.
   5. All structural components shall be constructed of 304 stainless steel.

E. Spray Shield Enclosure: The drum shall be fully enclosed by removable spray shields enclosing the dewatering drum to prevent any splashing or seeping of fluids from the equipment. Handles shall be provided on the covers to allow for manual removal. The spray shield covers shall be constructed of 304 stainless steel.

F. Drive Assemblies: The drive motors shall be a one piece, hollow shaft gearmotors designed to drive the dewatering drum volutes or mixers with no additional couplings or joints. Shafts shall be of high strength alloy steel ground to required tolerances. Motors shall be filled with grease on assembly and sealed for life. Gear motors shall be spiral-bevel type. At least one bearing on each shaft shall be of the combined radial and thrust type. Input power to the following drives shall be supplied through an A.C. variable frequency drive unit.
   1. Dewatering Drum:
      a. The drive assembly shall be complete with motor, gear reducer and poly-belt drive. The TEFC inverter-duty motor shall be a maximum of 1.0 horsepower, 3 phase, 60 Hz, 480 volt. The motor shall be enclosed in die cast aluminum with IP65 Insulation and suitable for severe service with a minimum service factor of 1.15.
      b. Volute rotational speed shall be obtained through a hypoid reduction gear with a 750:1 gear reduction. The gear reducer shall meet the standards of the AGMA. The output capacity of the gear reducer shall be equal to the motor horsepower less reducer losses at the rated service factor.
   2. Flash Mixing Tank:
      a. The drive assembly shall be complete with motor, gear reducer and poly-belt drive. The TEFC inverter-duty motor shall be a maximum of 0.5 horsepower, 3 phase, 60 Hz, 480 volt. The motor shall be enclosed in die cast aluminum with IP65 Insulation and suitable for severe service with a minimum service factor of 1.15.
      b. Mixer rotational speed shall be obtained through a hypoid reduction gear with a 10:1 gear reduction. The gear reducer shall meet the standards of the AGMA. The output capacity of the gear reducer shall be equal to the motor horsepower less reducer losses at the rated service factor.
   3. Flocculation Tank:
      a. The drive assembly shall be complete with motor, gear reducer and poly-belt drive. The TEFC inverter-duty motor shall be a maximum of 1.0 horsepower, 3 phase, 60 Hz, 480 volt. The motor shall be enclosed in die cast aluminum with IP65 Insulation and suitable for severe service with a minimum service factor of 1.15.
      b. Mixer rotational speed shall be obtained through a hypoid reduction gear with a 60:1 gear reduction. The gear reducer shall meet the standards of the AGMA. The output capacity of the gear reducer shall be equal to the motor horsepower less reducer losses at the rated service factor.

G. Discharge chute: A discharge chute shall be provided and designed to connect to the dewatered sludge conveyor hopper to prevent any spilling of dewatered solids. The chute shall have a minimum thickness of 12-gauge and shall be manufactured of 304 stainless steel.

H. Pressate Drain Pan: A pressate drain pan shall be mounted to the base frame underneath the drum to capture and direct pressate away from the unit. A 3” flanged connection shall be provided as part of the drain pan, and located as shown on the drawings. All structural components shall be manufactured of 304 stainless steel.

I. Anchor Bolts: All fasteners, anchor bolt, hex nuts, and washers shall be AISI 316 stainless steel unless otherwise indicated in this specification. Contractor shall furnish all anchor bolts of ample size and strength required by the Equipment Manufacture and

these documents to securely anchor each item of equipment. Anchor bolts shall be wedge or epoxy type for use as defined in Division 05 - METALS. Anchor bolts shall be sized by Manufacturer and shall be supplied and set by the Contractor. Equipment shall be placed on the foundations, leveled, shimmed, bolted down, and grouted with a non-shrink grout. All threaded fasteners shall be coated with a nickel based anti-seize thread lubricant prior to assembly.

J. Lubrication: The manufacturer shall state in the operating manual the amount of and specification for any lubricant required.

3.5 ELECTRICAL COMPONENTS AND ACCESSORIES

A. Provide all instruments and electrical devices required for the operation of the system as specified in this Section and indicated on the Drawings. Electrical components and wiring shall be provided and installed in accordance with the National Electric Code (NEC) and additional Montana State requirements as necessary. Note that the equipment in this Section will be installed in an unclassified area.

B. Interconnecting conduit for skid-mounted electrical device and wiring shall be the responsibility of the manufacturer. All other wiring and conduit are the responsibility of the installing contractor. In addition to the drive motor, the following electrical devices shall be furnished with the unit:

1. High Level Switch, two probe conductive level switch: A high level sensor will detect any high fluid level in the flocculation tank and will shut the system down and cause an alarm should this occur. One (1) 120 volt, single phase, 60 Hz switch unit shall be provided consisting of a two probe conductive level switch. The entire assembly shall form a completely watertight- and impact-resistant unit.
   a. High level switch and mounting parts shall be supplied by the sludge dewatering system equipment Manufacturer.
   b. All mounting parts for each instrument shall be Type 304 stainless steel and installed by the Manufacturer.
   c. Equipment power supply shall be provided from and wired to LCP-800 by the Manufacturer.
2. Solenoid Valve: One (1) 120 volt, single phase, 60 Hz solenoid valve for the spray wash system housed in a NEMA 4 enclosure shall have integral leads of adequate length and shall have NPT conduit connections as required to match the installation. The valve is to be supplied, installed, and wired to 1730-LCP-01 at the Hospital WWTP and 2730-LCP-01 at the Hon-Dah WWTP by the Manufacturer.
3. Provide all items not specifically called out which are required to implement the functions required for proper operation of the system. Where not specified, manufacturer’s standard equipment shall be provided.

C. Refer to Section 461155.04, DES: PROCESS CONTROL NARRATIVE-WWTP for a full description of the sequence of operation.

D. Refer to Division 400000, PROCESS INTERCONNECTIONS-WWTP, for additional information and requirements.

E. Control panels and electronic communication devices must comply with all US Federal regulations.

3.6 MATERIALS AND COATINGS SCHEDULE

A. All materials utilized in the construction of the sludge dewatering equipment shall be entirely suitable in every respect for the service required. All metals in contact with polyelectrolyte or sludge, and all other metal components other than those specified herein shall be stainless steel, type 304 or 316.

B. Protective Coatings shall be provided in accordance with manufacturer's recommendations and the following:

1. Stainless steel and plastic components shall not be painted. The stainless steel structural components and enclosure panels shall be passivated after fabrication to remove embedded iron, surface rust, and weld burn. All other surfaces shall be blast cleaned to an SSPC-SP6 finish, removing all dirt, rust, scale, and foreign materials.
2. For corrosion resistance, all carbon steel components shall be painted with the manufacture standard coatings, but must be at a minimum in accordance with and as specified in Section 099600 HIGH PERFORMANCE COATINGS-WWTP. All PVC and Fiberglass shall also be painted in accordance with 099600 HIGH PERFORMANCE COATINGS-WWTP.

3.7 SPARE PARTS

A. The Contractor shall furnish a one-year supply of all recommended lubricants.

PART 4 - EXECUTION

4.1 GENERAL

A. See Section 461155, SLUDGE DEWATERING SYSTEM – GENERAL-WWTP, for additional requirements.

4.2 INSTALLATION

A. Contractor shall install Manufacturer's equipment in accordance with Section 461155, SLUDGE DEWATERING SYSTEM – GENERAL-WWTP, Manufacturer's recommendations, the Drawings and Specifications.

1.01 FUNCTIONAL TESTS

A. Provide functional testing as specified in Section 461155, SLUDGE DEWATERING SYSTEM – GENERAL-WWTP.

1.02 PERFORMANCE TESTS

A. Provide performance testing as specified in Section 461155, SLUDGE DEWATERING SYSTEM – GENERAL-WWTP.

1. The throughput for performance testing shall be 35 gpm.

END OF SECTION

SECTION 461155.02 – DES POLYMER BLENDING SYSTEM – WWTP

PART 1 - GENERAL

1.1 WORK INCLUDED

A. This section covers the work necessary to supply and install one (1) polymer dilution and feed system, complete with all accessories necessary for operation. The polymer system will be installed in the Solids Handling area and will be used to add polymer to dewater aerobically digested sludge processing through the volute press.

B. The polymer dilution and feed system shall be capable of effectively activating and fully blending with water a homogenous polymer solution ranging from 0.1% to 1% concentration of emulsion polymers with active contents up to 75%.

C. The equipment shall be installed as shown on the Drawings, as recommended by the manufacturer, and in compliance with all OSHA, local, state, and federal codes and regulations.

D. See Section 461155, SLUDGE DEWATERING SYSTEM – GENERALWWTP, for additional requirements.

1.2 EQUIPMENT NUMBERS

A. Hospital WWTP

Equipment #	Description
1730-M-02-1,2	Polymer Drum Mixer Motor
1730-M-02	Polymer Tank Mixing Chamber Motor
1730-P-02	Polymer Pump
1730-SV-02	Solenoid to Polymer Mixing Chamber

B. Hon-Dah WWTP

Equipment #	Description
2730-M-02-1,2	Polymer Drum Mixer Motor
2730-M-02	Polymer Tank Mixing Chamber Motor
2730-P-02	Polymer Pump
2730-SV-02	Solenoid to Polymer Mixing Chamber

PART 2 - PRODUCTS

2.1 GENERAL

A. “Basis-of-Design Products:” The first named Manufacturer’s system was used as the Basis of Design for this Specification and the Drawings. The structures and facilities appurtenant to the sludge dewatering system shall meet the basis of design in quality

and capacity. Equipment furnished by all qualified, interested Manufacturers will be considered, provided the necessary structural, electrical, and mechanical changes are submitted in conformance with the requirements of the GENERAL CONDITIONS and DIVISION 1, GENERAL REQUIREMENTS. The Contractor shall be responsible for all design changes associated with other Manufacturers' equipment and shall bear all costs for necessary changes for a complete and satisfactory installation.

B. Materials shall be the Manufacturer's standard for the intended service specified hereinafter unless otherwise specified herein. All materials shall be compatible with liquid pumped.

2.2 MANUFACTURERS

A. Velodyne Model VM-3P-300-X0D

B. Or Approved Equal

2.3 SERVICE CONDITIONS

A. The equipment shall be suitable for installation indoors, for exposure to continuous 98 percent relative humidity conditions, for operation in ambient air temperatures from 44 to 100 degrees F, and for exposure to the chemicals as listed herein. All plumbing and components shall be rated for 150 psi regardless of pump pressure. The site ground elevation is approximately 6,980 feet above sea level.

2.4 PERFORMANCE REQUIREMENTS

A. Polymer Testing
   1. Polymer jar testing is the responsibility of the equipment manufacturer.

B. Feed Rates
   1. Neat Polymer Feed Range: 0.15 – 3.0 gph
   2. Dilution Water Feed Rate: 30 – 300 gph

2.5 EQUIPMENT

A. For both the Hospital and Hon-Dah WWTP, the polymer blending systems shall be one of two technologies, Type A or Type B as noted below:

B. Type A - Multi-zone Hydro-mechanical Mixing Chamber:
   1. The polymer blending system is a critical part of the process and must be designed to provide optimal performance and reliability under all operating conditions. These specifications are based on the VeloBlend™ technology. Other technologies will be considered only if they are proven to provide an equal level of performance and reliability under all operating conditions as the system specified herein. The polymer blending technology on this project must have a minimum track record of three (3) years and a minimum of 200 installations. A list of references testifying to the systems ability to meet the above requirements must accompany the manufacturer's proposal.
   2. The device shall be capable of operating on plant water pressure alone at 30 psi. In addition, the system shall be capable of producing its mixing energy independent of plant water pressure through a variable intensity, controllable stainless steel mechanical mixer. Plastic or brass impellers are not acceptable. The system shall be capable of producing high, non-damaging mixing energy at all flow rates without damage to the polymer's molecular structure. In order to prevent polymer build-up, the mixing chamber shall maintain high velocity in the

entire chamber - at no time shall there be low velocity within any portion of the mixing chamber.

3. Both mechanical and non-mechanical mixing zones shall be clear Lexan to view the mixing action and blending effectiveness. Acrylic chambers prone to becoming brittle over time and cracking, or opaque PVC pipe shall not be acceptable to meet this requirement.
4. The mixing chamber shall have a maximum rated pressure of 100 psi. Provide a pressure relief on the mixing chamber, adjustable between 25 and 75 psi. The valve shall have a brass, stainless steel or PVC body with stainless steel, Viton and Teflon internals. All holes tapped in plastic shall have helicoil inserts for increased strength.
5. In order to handle the wide range of polymers available and to optimize system reliability a Hydro-Mechanical polymer blending device shall be provided. The device shall be capable of blending polymer independent of water pressure by a variable speed stainless steel mixing impeller. Plastic impellers shall not be acceptable. The special engineered polymer mixing impeller shall be designed to produce both axial and radial flow to optimize mixing effectiveness and to effectively inducing high, non-damaging mixing energy over the systems full flow range. The impeller shall be as manufactured by Velocity Dynamics of Boulder, CO.
6. The mixing impeller shall be controlled by a VFD and driven by a wash-down duty motor. The mixer drive shaft shall be sealed by a mechanical seal which shall have an integrally mounted and factory plumbed seal flushing valve. A drain port behind the seal shall be provided in the mixing chamber to drain the polymer solution in case of a seal failure. The seal shall be easily accessible for replacement. Systems without a seal flushing system shall not be considered. All bearings shall be external from the mixing chamber. Internal bearings shall not be acceptable. Systems which rely on high shear and or constant speed impellers or that rely on close tolerances for blending shall not be acceptable.
7. Provide a neat polymer check valve specifically designed to isolate neat polymer from dilution water. The valve shall be designed with an open, unobstructed path to the valve seat. The valve body shall be constructed of Teflon with Viton seals. The valve poppet and spring shall be stainless steel and designed to prevent polymer from flowing through the spring, causing build-up and plugging. Plastic spring covers shall not be used. The valve shall be readily accessible for cleaning and shall not require tools for removal, cleaning or replacement. Conventional check valves, valves that rely on ball seals, and or check valves that are installed inside the mixing chamber, or which require mixing chamber disassembly for servicing will not be accepted. The locking pin used to hold the valve in place shall be attached to the mixing chamber with a lanyard.

C. Type B – Hydrodynamic Multi-Zone Mixing Chamber

1. A non-mechanical hydrodynamic blending device specifically designed to dilute and activate emulsion, dispersion and solution type polymer with viscosities up to 75,000 cps. and active contents up to 75%, shall be provided. Systems without a proven track record with all types of polymers described above will not be considered.

2. The liquid polymer activation chamber's mixing energy shall be staged such that it provides for high, non-damaging mixing energy over the full operating range of the system which then dissipates through concentric chambers. The integral water control device, which shall also produce mixing energy by creating a pressure drop across its orifice, shall be constructed of stainless steel and brass and shall be designed to allow orifice replacement without disassembly of any other part of the system. The system shall be designed for use with either potable or non-potable dilution water.
3. A mixing chamber drain valve with 1/2" fitting shall be provided and plumbed to the nearest floor drain. The mixing chamber shall have a maximum rated pressure of 150 psi.
4. Provide a stainless steel, adjustable-range pressure relief valve on mixing chamber with a range of 50 to 175 psi.
5. At no time shall polymer be exposed to excessive shear. System's which are "retention time dependent", a system which is prone to induce insufficient or excessive mixing energy depending on flow rate and the subsequent retention time in the mixing chamber, or which utilize conventional static mixers, mixing blocks, eductors or flash mixers, shall not be considered. All components that require periodic maintenance shall be readily accessible.
6. Provide a neat polymer check valve specifically designed to isolate neat polymer from dilution water. The valve shall be designed with an open, unobstructed path to the valve seat. The valve body shall be constructed of PVC and the ball shall be stainless steel. The valve shall be readily accessible for cleaning and shall be easily disassembled. Conventional check valves, and or check valves that are installed inside the mixing chamber, or which require mixing chamber disassembly for servicing will not be accepted.

D. Dilution Water Assembly
1. Provide the assemblies as described below for both the Hospital and WWTPs.
2. Provide a 1-inch FNPT dilution water inlet connection.
3. The dilution water flow rate shall be monitored by a Rotameter type flow meter having a range of 30 - 300 GPH. A union shall be provided on the Rotameter to allow easy removal for cleaning.
   a. Rotameter accuracy shall be 2% of full scale flow.
   b. Materials of Construction:
      1. Metering Tube: Machined Cast Acrylic
      2. Internal Components: 316L Stainless Steel
      3. Fitting: PVC
      4. Elastomers: Buna-N
4. The unit shall have an electric solenoid valve for on/off control of total dilution water flow.
   a. Materials of Construction: Brass body, NBR Seal
5. The dilution water flow rate shall be manually adjusted through a flow control valve connected directly to the mixing chamber. Valve shall be constructed of PVC body, SS needle, and SS seat.
6. A differential pressure type low water differential pressure alarm shall be provided. The switch shall be adjustable between 10 and 90 psig. Switch shall be NEMA 4X rated.

7. Provide a 2-1/2-inch stainless steel liquid filled pressure gauge to monitor dilution water inlet pressure.

E. Progressive Cavity Neat Polymer Metering Pump
1. Provide metering pumps as described for both the Hospital and Hon-Dah WWTPs.
2. The unit shall have one (1) neat polymer metering pump integrally mounted on the system skid. The metering pump shall have a range of 0.15 – 3.0 GPH. The pump shall be a positive displacement, progressive cavity type constructed of stainless steel and Viton. The shaft seal shall be a packing type seal. A 230/480 AC wash-down inverter-ready motor shall drive the pump. A gear reducer shall be provided to produce a maximum pump shaft speed of not more than 277 RPM. The motor shall be controlled by a VFD motor controller.
3. Manufacturer shall provide a 250 ml calibration column with two full port PVC ball valves having Viton O-rings. The column shall be calibrated for a one minute draw-down and read in GPH and milliliters.
4. Manufacturer shall provide a thermal type loss of polymer flow sensor.

F. Solution Discharge Assembly
1. Provide the assemblies as described below for both the Hospital and WWTPs.
2. Provide a 1-inch FNPT polymer solution discharge connection.
3. Provide a 2-1/2-inch stainless steel liquid filled pressure gauge to monitor system discharge pressure.

G. Controls
1. The screw conveyors for both the Hospital and Hon-Dah WWTPs shall be controlled by the SDS control panel as described in Section 461155, SLUDGE DEWATERING SYSTEM – GENERAL-WWTP, and Section 461155.04, DES: PROCESS CONTROL NARRATIVE-WWTP.

H. Power:
1. 480 VAC, 3Ph, 60 Hz for motors and 120 VAC, 1Ph, 60 Hz for instrumentation and controls. A circuit breaker on the main control circuit and on each motor shall be provided as manufactured by Allen Bradley or equal for both the Hospital and Hon-Dah WWTPs.

I. Equipment Skid
1. Equipment skids shall be provided as described for both the Hospital and Hon-Dah WWTPs.
2. The system's frame shall be of rugged 304 stainless steel construction. No mild steel shall be used. All piping shall be rigidly supported.
3. Under no circumstance shall the pump suction exceed 5-inches from the bottom of the skid for progressive cavity pumps.

J. Accessories:
1. For both the Hospital and Hon-Dah WWTPs, provide two (2) mixers for 55-gallon drums. The mixer shall have a ½ HP, 230/460 VAC, 1750 RPM motor with thermal overload protection. The mixer shaft shall be stainless steel. One 3-inch collapsible impeller shall be provided. The drum mixer controls shall be integral to the motor and include an ON/OFF switch, and 0-60 minute timer and 10’ power lead.

2. For both the Hospital and Hon-Dah WWTPs, a mount designed to screw into a 2-inch bung connection shall be constructed of stainless steel and be designed to position the mixer shaft at an angle for ideal mixing. A stainless steel wall mounting bracket with drip pan shall be supplied to support the mixer and collect polymer drips while the mixer is not is use.
3. For both the Hospital and Hon-Dah WWTPs, provide two (2) drum containment dollies for handling 55-gallon drums. Dollies shall include HDPE construction, yellow color, 10” poly wheels, 2” black strap and buckle, weight of 98 lbs, handling capability of 600 lbs, manual handles, and fork pockets. The dollies provide secondary containment with 70 gallons of storage when tilted down using a sump with drain plug. Provide Eagle Model 1617Y, or equal.
4. For both the Hospital and Hon-Dah WWTPs, provide two drum suction assemblies constructed of a 2” bung drum connection, ¾” PVC ball valve, 6” length clear PVC pipe, and transition to ½” tubing.

2.6 SPARE PARTS AND SPECIAL TOOLS

A. Provide spare parts and special tools as recommended by the Manufacturer.

PART 3 - EXECUTION

3.1 PREPARATION FOR SHIPMENT, STORAGE, AND PROTECTION

A. Equipment shall be prepared and protected for shipment and shipped as specified in Division 01 – GENERAL CONDITIONS.

3.2 PUMP AND DRIVER INSTALLATION

A. Install in accordance with the Manufacturer’s recommendations and as shown on the Drawings.

3.3 FIELD TESTS

A. Functional Test: Prior to plant startup, all equipment described herein shall be inspected for proper alignment, quiet operation, proper connection, and satisfactory performance by means of a functional test.

3.4 MANUFACTURER’S CERTIFICATE(S)

A. Provide Manufacturer’s certificate(s) in accordance with Division 01 – GENERAL CONDITIONS.

END OF SECTION

SECTION 461155.03 DES: SCREW CONVEYOR – WWTP

PART 1 - GENERAL

1.1 WORK INCLUDED

A. See Section 461155, SLUDGE DEWATERING SYSTEM – GENERAL-WWTP, for additional requirements.

B. This section covers the work necessary to furnish and install, complete, one (1) shaftless screw conveyor in the Hospital WWTP and one (1) in the Hon-Dah WWTP as part of the sludge dewatering systems. All appurtenant items for a complete and working system as described herein shall also be provided.

C. Manufacturers submitting proposals for equipment that would require changes in the design shall also include detailed information on structural, electrical, mechanical, and other miscellaneous changes or modifications necessary to adapt their equipment to the arrangement shown.

1.2 EQUIPMENT NUMBERS

A. Hospital WWTP

Equipment #	Description
1730-SC-04	Screw Conveyor
1730-M-04	Screw Conveyor Motor
1730-SE-04	Screw Conveyor Zero Speed
1730-ES-04 (2)	Screw Conveyor E-Stop Cord & Pushbutton

B. Hon-Dah WWTP

Equipment #	Description
2730-SC-04	Screw Conveyor
2730-M-04	Screw Conveyor Motor
2730-SE-04	Screw Conveyor Zero Speed
2730-ES-04 (2)	Screw Conveyor E-Stop Cord & Pushbutton

1.3 SUBMITTALS

A. Submittals shall be made as required in Section 461155, SLUDGE DEWATERING SYSTEM – GENERAL-WWTP. In addition, the following specific information shall be provided:

1. Conveyor torque requirement calculations.
2. Torque calculations for the gear reducer and reducer motor.
3. Horsepower calculations for the drive motor(s).
4. Utilize spiral strength calculations for spring (spiral) compression and elongation showing the supplied spiral meets the requirement to not exceed a spring effect of ± 1.0 mm per 100 mm of length at maximum load conditions.

PART 2 - PRODUCTS

2.1 GENERAL

A. "Basis-of-Design Products:" The first named Manufacturer's system was used as the Basis of Design for this Specification and the Drawings. The structures and facilities appurtenant to the sludge dewatering system shall meet the basis of design in quality and capacity. Equipment furnished by all qualified, interested Manufacturers will be considered, provided the necessary structural, electrical, and mechanical changes are submitted in conformance with the requirements of the GENERAL CONDITIONS and DIVISION 1, GENERAL REQUIREMENTS. The Contractor shall be responsible for all design changes associated with other Manufacturers' equipment and shall bear all costs for necessary changes for a complete and satisfactory installation.

2.2 MANUFACTURERS

A. PW Tech, Inc.

B. Or approved equal: Manufacturers regularly engaged in the manufacture of shaftless screw conveyance equipment as specified herein and who can demonstrate equipment of this specified design, in actual service for a period of not less than 5 years will be considered as acceptable manufacturers.

2.3 OPERATING CONDITIONS:

A. The screw conveyor shall be designed to transport wastewater treatment plant dewatered sludge under the following conditions:
   1. Material to be handled: Dewatered municipal sludge with solids concentrations from 15 to 20% solids discharged from a solids dewatering volute press.
   2. Solids handling capacity: Minimum of 37 cubic feet per hour
   3. Operation in an unclassified area.
   4. Intake Type: Open Hopper
   5. Trough Type: U-shaped
   6. Conveyance Angle: 30 degrees
   7. Discharge: 1 Pile in Sludge Cake Trailer and Storage Area

2.4 MATERIALS

A. Materials used in the fabrication of the equipment under this section shall conform to the following:
   1. Chutes, Troughs, End Plates, Covers, Hoppers & Supports: AISI 304 stainless steel
   2. Spiral Flighting: Special Chrome-Alloy Steel - 225 Brinnell minimum
   3. Wear Liner: UHMW Polyethylene
   4. Hardware: AISI 304 stainless steel

2.5 SCREW CONVEYOR

A. Spiral: The spiral shall be constructed of high tensile micro-alloy steel w/minimum 225 Brinnell Hardness. The spiral OD shall be up to 9 inches and designed with adequate stability to prevent distortion or jumping in the trough. Spiral flighting shall have full penetration welds at all splice connections. The flights shall be aligned to assure true alignment when assembled. The spiral must be provided in to allow separate removal of the spiral from the trough in the solids handling room and the sludge storage area. Manufacturer to ensure spiral sections can be removed without conflicting with the wall penetration as shown in the drawing.

B. Spiral Mounting: A gland packing ring consisting of two Teflon fiber packing rings shall seal the drive shaft at its penetration through the end plate, along with a greased labyrinth sealing system. The spiral shall be connected to the drive system through a flanged connection plate that is welded to the spiral forming a smooth and continuous transformation from the flange plate to the spiral. The drive shaft shall have a mating flange and shall be bolted to the spiral connection plate. A grease lubricated labyrinth seal shall be shaft mounted internally in the conveyor between the back plate and spiral coupling connection.

C. Trough: The conveyor trough shall be U-shaped and constructed of 12-gauge type 304 stainless steel and shall be approximately 13 feet long. The trough shall be lined with a maximum 3/8 inch thick UHMW polyethylene wear liner. The liner shall be supplied in maximum 4 foot long sections for ease of replacement. Manufacturer to ensure that liner sections can be removed without conflicting with the wall penetration as shown in the drawing.

D. Drain: A flanged drain outlet shall be provided to facilitate cleaning. The drain outlet shall be piped to a drain as shown on the drawings, with adequate cleaning facilities.

E. Inlet Hopper: Transition feed hoppers from the volute press discharges to the screw conveyor shall be supplied by the Manufacturer. Hoppers shall be minimum 12 gauge, type 304 stainless steel, and flanges shall be a minimum of 5mm in thickness. The transition hoppers shall provide effective containment of all solids between the volute press discharge chutes and the screw conveyor trough. The transition hopper shall be removable for screw conveyor service and maintenance.

F. Covers: The trough shall be covered with 12-gauge type 304 stainless steel covers. Individual cover panels shall be equipped with handles to aid removal during maintenance. Covers shall be a maximum 5 feet in length and fastened with quarter-turn latches and safety bolts.

G. Discharge Chute: Provide a discharge at the end of the conveyor trough to direct solids downward into a trailer, as shown on drawings. The frame and fasteners, shall be type 304 stainless steel and shall be easily accessible for maintenance.

H. Support Legs: The unit shall have support legs constructed of a minimum of ½-inch thick type 304 stainless steel structural angle designed to support the required loads. The leg heights will be appropriate to inclination intended.

I. Drive System: The spiral conveyor shall be driven by a constant-speed gear reducer motor drive unit mounted to a bellhousing adapter flange mounted to the end plate of the conveyor. The drive unit shall be rigidly supported so there is no visible "wobble" movement. The drive system shall be designed with the ability under 1.5 times the design load with the trough filled.

1. The motor shall be 2 HP min, 1800 RPM, 230/460 volt, 3 Phase, 60 Hz, 1.15 S.F., TEFC, NEMA Design B, with Class B insulation, 40°C ambient temperature rated for and unclassified environment. The motor shall be coupled to the gear reducer via a NEMA C-face adapter.
2. The gear reducer shall be AGMA Class II, single or double reduction, helical gear units with high capacity roller bearings. Bearings shall be designed for the thrust loads from the fully loaded startup condition and shall have an AFBMA B-10 life of 30,000 hours. The reducer shall have a cast iron housing and have an output speed of 19 RPM. The reducer will be air-cooled unit with no auxiliary cooling requirement. The gear reducer shall be sized with a torque service factor of 1.5 times the absorbed power or 1.1 times the motor nameplate, at the driven shaft speed, whichever is greater.

2.6 ELECTRICAL COMPONENTS AND ACCESSORIES

A. Provide all instruments and electrical devices required for the operation of the system as specified in this Section and indicated on the Drawings. Electrical components and wiring shall be provided and installed in accordance with the National Electric Code (NEC) and additional Montana State requirements as necessary.

B. Motor starters shall be provided under Section 461155, SLUDGE DEWATERING SYSTEM – GENERAL-WWTP.

C. Electrical Devices: Electrical device interconnecting conduit and wiring shall be the responsibility of the Division 26 contractor. In addition to the drive motor, the following electrical devices shall be furnished with the unit:
   1. E-Stop Cord/Switch: The conveyor shall be furnished with an emergency trip cord and safety switch. The cord shall run the full length of the conveyor within the Solids Building as shown on the drawings and shall immediately stop the conveyor when the switch is actuated. The switch shall be RS type by Conveyor Components Corporation or approved equal.
   2. A motion detector system (zero speed switch) shall be provided for the screw conveyor to detect loss of motion of the spiral. The system shall include but not be limited to a NEMA 4 probe, as cable require for the installation, junction box, ferrous blocks and ¾-inch MNPT conduit connection to accommodate field wiring. The motion unit (controller) shall be installed in the Solids Building as shown on the Drawings.

D. Refer to Division 40, PROCESS INTERCONNECTIONS-WWTP, for additional information and requirements.

2.7 ACCESSORIES

A. Identification Plate: A 16-gauge stainless steel identification plate shall be securely mounted on each unit in a readily visible location. The plate shall bear the 1/4- inch die-stamped equipment identification number that is assigned each unit in this Specification herein and shown on the Drawings.

B. Guards: All openings shall be protected with safety guards as required by OSHA.

C. Lifting Lugs: Equipment weighing over 100 pounds shall be provided with lifting lugs.

2.8 SPARE PARTS

A. One (1) complete packing gland set for both the Hospital and Hon-Dah WWTPs.

B. One (1) complete set of wear liners for both the Hospital and Hon-Dah WWTPs.

C. Lubricants of the type and quantity as recommended by the conveyor manufacturer for start-up operation.

2.9 ANCHOR BOLTS

A. Contractor shall furnish all anchor bolts of ample size and strength recommended by the manufacturer to securely anchor each item of equipment. Anchor bolts, hex nuts, and washers shall be AISI Type 316 stainless steel unless noted otherwise. Anchor bolts shall be wedge or epoxy type for use as defined in Division 05 - Metals.

B. Fasteners: All fasteners shall be Type 316 stainless steel.

C. Anchor bolts shall be set by the Contractor. Equipment shall be placed on the foundations, leveled, shimmed, bolted down, and grouted with a non-shrink grout.

2.10 CONTROL SYSTEM:

A. The screw conveyor shall be controlled by the SDS control panel as described in Section 461155, SLUDGE DEWATERING SYSTEM – GENERAL-WWTP, and Section 461155.04, DES: PROCESS CONTROL NARRATIVE-WWTP.

2.11 SHOP SURFACE PREPARATION AND PAINTING

A. All stainless steel sub-assemblies shall be acid passivated after welding for corrosion resistance and to provide a superior surface finish.

B. For corrosion resistance, all carbon steel components shall be painted with the manufacture standard coatings, but must me at a minimum in accordance with and as specified in Section 099600, HIGH PERFORMANCE COATINGS-WWTP. Stainless steel components shall not be painted. All PVC and Fiberglass piping shall also be coated as specified in Section 099600, HIGH PERFORMANCE COATINGS-WWTP.

C. The motor and gear reducer shall be Manufacturer's standard finish. The torque bracket shall be epoxy coated carbon steel. The drive shaft and spiral shall be prime coated.

PART 3 - EXECUTION

3.1 PREPARATION FOR SHIPMENT, STORAGE, AND PROTECTION

A. Equipment and materials shall be prepared and protected for shipment and shipped in accordance with the requirements of Division 01 - GENERAL REQUIREMENTS.

3.2 INSTALLATION

A. Contractor shall install Manufacturer’s equipment in accordance with Section 461155, SLUDGE DEWATERING SYSTEM – GENERAL, Manufacturer’s recommendations, the Drawings and Specifications.

3.3 PAINTING

A. For corrosion resistance, all carbon steel components shall be painted with the manufacturer's standard coatings, but must meet a minimum in accordance with and as specified in Section 099600, HIGH PERFORMANCE COATINGS-WWTP. Stainless steel components shall not be painted. All PVC and Fiberglass piping shall also be coated as specified in Section 099600, HIGH PERFORMANCE COATINGS-WWTP.

3.4 FACTORY TESTS

A. Provide Manufacturer’s certification that the screw conveyor is capable of handling the specified solids load.

3.5 FUNCTIONAL TESTS

A. Provide functional testing as specified in Section 461155, SLUDGE DEWATERING SYSTEM – GENERAL-WWTP.

3.6 PERFORMANCE TESTS

A. Provide performance testing as specified in Section 461155, SLUDGE DEWATERING SYSTEM – GENERAL-WWTP.

END OF SECTION

461155.04 – PCN: SLUDGE DEWATERING SYSTEM – WWTP

PART 1 - INTRODUCTION

The following Process Control Narrative describes in detail the operation of the Sludge Dewatering System equipment including sludge pump, polymer system, dewatering press, and conveyor. The operating conditions and scenarios described below include, but are not limited to, the majority of conditions and scenarios which will be encountered.

Equipment covered by this Process Control Narrative is specified in the following Sections:

Division 46 – WATER AND WASTEWATER EQUIPMENT-WWTP
Division 40 – PROCESS INTERCONNECTIONS-WWTP
Division 26 – ELECTRICAL-WWTP

PART 2 - PROCESS OVERVIEW

The DS flow stream will come through actuated valves on the digester inlet/outlet piping, through the sludge pump, mix with the polymer injection, proceed through the dewatering press, and discharge into a conveyor over a dump trailer. Although the sludge dewatering system equipment can run in an automated operation, it is recommended that operators are on shift at the plant or working nearby.

Table 1 lists the capacities of solids handling equipment.

Table 1: Solids Dewatering Capacity

Parameter	Value
Hydraulic Loading (Max)	35 gpm
Solids Loading (Max)	350 lb/hr
Polymer Feed	0.25-5 gph

Table 2 summarizes the Solids Handling components and tag numbers for the Hospital and Hon-Dah Site. There are four parts that form the solid handling system including the sludge pump, polymer system, dewatering press, and conveyor.

Table 2: Sludge Dewatering System Equipment and Instrumentation

Process Equipment	Hospital WWTP Tag Number	Hon-Dah WWTP Tag Number
Sludge Pump 1	1730-P-01	2730-P-01
DS High Pressure Switch	1730-PSH-01	2730-PSH-01
Sludge Pump 2	1730-P-02	2730-P-02
DS High Pressure Switch	1730-PSH-02	2730-PSH-02
DS Flow Meter	1730-FE/FIT-01	2730-FE/FIT-01
Polymer Blending System	1730-PBS-02	2730-PBS-02
Polymer NPW Solenoid	1730-SV-02	2730-SV-02
Polymer Mixing Chamber	1730-M-02	2730-M-02
Polymer Low Pressure	1730-PDS-02	2730-PDS-02
Polymer Metering Pump	1730-P-02	2730-P-02
Polymer Drum Mixer 1	1730-M-02-1	2730-M-02-1
Polymer Drum Mixer 2	1730-M-02-2	2730-M-02-2
Dewatering Press	1730-SP-03	2730-SP-03
Press NPW Solenoid	1730-SV-03	2730-SV-03
Flash Mixer	1730-FM-03	2730-FM-03
Flash Mix High Level Float	1730-LSH-03	2730-LSH-03
Flocculation Mixer	1730-FLM-03	2730-FLM-03
Flocculation Level Transducer	1730-LIT-03	2730-LIT-03
Press Zone 1 Motor	1730-M-03-1	2730-M-03-1
Screw Conveyor	1730-SC-04	2730-SC-04
Conveyor Motor	1730-M-04	2730-M-04
Conveyor Rotation Sensor	1730-SE-04	2730-SE-04
Conveyor E-Stop	1730-ES-04	2730-ES-04
Dewatering Control Panel	LCP-1730- 01	LCP-2730-01

PART 3 - CONTROLS OVERVIEW

Process control for the Solids Dewatering System will be provided by the dewatering control panels (LCP-1730-01 or LCP-2730-01) with monitoring by the Plant Control System (PCS). The LCP-1730-01 or LCP-2730-01 and PCS will have human-machine interfaces to allow operators to view operational parameters. The LCP-1730-01 or LCP-2730-01 and PCS will monitor the status and alarms for all the dewatering instrumentation and equipment. LCP-1730-01 or LCP-2730-01 will allow operator access for changing setpoints, manipulating select HOA switches, and reset alarms. The LCP-1730-01 or LCP-2730-01 will control sludge pump operation and communicate with the PCS. The PCS will primarily have monitoring functions, allow for system enable, and allow for alarm acknowledgement.

The variable frequency drives (VFDs) for the sludge pumps will be located in the Motor Control Center (MCC) in the electrical room of each WWTP and be equipped with keypads and displays allowing for operator access.

The variable frequency drives (VFDs) for the polymer pump and mixer, dewatering press motors, and conveyor motor will be located in the LCP-1730-01 or LCP-2730-01 panels and be equipped with HMI operator access.

The sludge pumps will be equipped with local operator stations at the pump locations and a VFD keypad at the MCC.

PART 4 - CONTROL STRATEGY

4.1 PLANT CONTROL SYSTEM

The LCP-1730-01 or LCP-2730-01 will fully control the Sludge Dewatering System. It will provide status signals and alarms to the PCS. The LCP-1730-01 or LCP-2730-01 will receive an analog signal from the DS flow meter 1730-FE/FIT-01 or 2730-FE/FIT-01 following the sludge pump. When the Sludge Dewatering System is activated by the operator, the PCS must provide an enable signal which is based on monitoring if an aerobic digester basin inlet/outlet valve is open and there is liquid in the basin. LCP-1730- 01 or LCP-2730- 01 will activate the sludge pump run and control speed through the MCC, monitor flow rate, and run all equipment motors at speeds set during start-up or optimized over the life of the equipment.

The PCS will have at a minimum the following functions for Sludge Dewatering System equipment control:

A. Sludge Pumps:
- Sludge pump Start/Stop (each pump)
- Sludge pump position indication of HOA switch in MCC (each pump)
- Sludge pump speed percent setpoint (each pump)
- Sludge pump speed indication (each pump)
- Sludge pump VFD frequency indication (each pump)
- Sludge pump motor current indication (each pump)
- Sludge pump RUN (each pump)
- Sludge pump Run Hours (each pump)
- Sludge pump communication FAIL indication (each pump)
- Sludge pump High temperature FAIL (each pump)
- Sludge pump High pressure FAIL (each pump)
- Sludge pump General FAIL indication (each pump)
- Elapsed Time Meter (ETM) for sludge pump (each pump)

B. Dewatering System:
- System Enable
- Sludge Pump Speed (each pump)
- System HOA
- System Running
- System Fail
- Sludge Flow

The LCP-1730-01 or LCP-2730-01 will have at a minimum the following functions for Sludge Dewatering System equipment control:

A. Overall System:
- Dewatering system enable indication (from PCS)
- Dewatering system HOA switch
- Dewatering system RUN
- Dewatering system E-STOP
- Dewatering system FAIL
- DS flow rate setpoint
- DS flow rate indication from the magnetic flow meter

B. Sludge Pumps:
- Sludge pump Start/Stop (each pump)
- Sludge pump speed percent setpoint (each pump)

C. Dewatering System:
- Polymer system HOA switch
- Polymer NPW solenoid OPEN
- Polymer mixer RUN
- Polymer mixer FAIL
- Polymer mixer RESET
- Polymer pump RUN
- Polymer pump FAIL
- Polymer pump RESET
- Polymer pump speed control
- Polymer low pressure switch
- Volute press HOA switch
- Volute press flash mix motor RUN
- Volute press flash mix motor FAIL
- Volute press flash mixer RESET
- Volute press flash mix tank high level ALARM
- Volute press flocculation mix motor RUN
- Volute press flocculation mix motor FAIL
- Volute press flocculation mix motor RESET
- Volute press flocculation tank level indication
- Volute press drum RUN
- Volute press drum FAIL
- Volute press drum RESET

- Volute press drum spray valve OPEN
- Conveyor HOA switch
- Conveyor RUN
- Conveyor FAIL
- Conveyor RESET
- Conveyor E-STOP

D. MCC
The MCC for the sludge pumps will be located in the electrical room of each WWTP. MCC-10 will be located at the Hospital WWTP and MCC 20 will be located at the Hon-Dah WWTP. The MCC provides power to the pumps and includes a VFD for the pump. There will be a keypad and an LCD screen for the pump VFD with operator access to status displays and pump speed controls.

E. Local Operator Station
The sludge pumps will have local operator stations (LOSs) equipped with an HOA switch, RESET switch, RUN indication, and FAIL indication. A local high pressure switch will disable the sludge pumps directly to the VFD as a protection.

4.2 SEQUENCE OF OPERATION

A. HAND Operation – Sludge Pump
When the HOA switch at the LOS for a sludge pump is in the HAND position and an enable signal from the PCS is received, the pump runs continuously at the last input setpoint speed. The speed can be entered at LCP-1730-01 or LCP-2730-01 HMI prior to switching to HAND operation. Once in HAND, the pump speed can also be changed at the MCC using the VFD keypad at any time. The pump motor operates until the LOS HOA switch is turned to OFF, a fault occurs, or power to the pump is lost. If the pump is turned to OFF at the LOS switch, the LCP-1730-01 or LCP-2730-01 will not start pumps.

B. HAND Operation – Dewatering System
The dewatering system components can be operated by selecting HAND at the HOA switches for the polymer feed system, the volute press, and the screw conveyor on the LCP-1730-01 of LCP-2730-01 HMI screens. When placing equipment with VFDs in HAND, a speed selection will need to be made at the respective VFD keypad. The conveyor HOA can be turned to HAND and does not have a speed adjustment.

When in HAND, the system components operate until the HOS switches are turned off, a fault occurs, or power to the system is lost. If any HOA switches are set to OFF, LCP-1730-01 or LCP-2730-01 will not start the system.

C. AUTOMATIC (AUTO) Operation – Sludge Pump

During automatic operation, the HOA switch on the VFD key pad at the MCC and the HOA switch at the LOS will be in the AUTO position, and the LCP-1730-01 or LCP-2730-01 will control the pump speed using an analog signal to the VFD.

One sludge pump will be started when LCP-1730-01 or LCP-2730-01 starts Sludge Dewatering System equipment and has an enable from the PCS. The sludge pump will initiate pumping at a flow of approximately 15 gpm-35 gpm as set by the operator on the LCP-1730-01 or LCP-2730-01 HMI. The initial flow value is typically determined at start up with the equipment manufacturer.

During AUTO operation the LCP-1730-01 or LCP-2730-01 will turn the sludge pump on and off based on Sludge Dewatering System HOA switch position and DS flow meter feedback. Pump speed will be adjusted to meet an operator adjustable flow rate. Automatic alternation will alternate sludge pumps with each system start. Table 3 below lists recommended set points for the pump operation.

Table 3: Sludge Dewatering System Operational Setpoints

Parameter	Setting
Sludge Pump Flow	15-35 gpm
Polymer Pump	0.2-5 gph

D. AUTOMATIC Operation – Dewatering System

During automatic operation, the LCP-1730-01 or LCP-2730-01 HOA switch selections for the polymer pump and mixer, flash mixer, flocculation mixer, and drum motor will be in AUTO and speeds will be controlled by system setpoints. Setpoints are operator adjustable and typically determined at start up with the equipment manufacturer. The conveyor motor will be in AUTO and run at constant speed. When the operator starts the system, all components will run.

E. FAIL Signals

- The sludge pump motor will stop immediately if high motor current is detected, or if the pump's integrated temperature switch, or the discharge high pressure switch are activated. Under any of these conditions an external FAIL alarm will be generated at the LCP-1730-01 or LCP-2730-01 and PCS. These faults must be reset by pressing the RESET button at the LOS.
- A communication FAIL occurs if there is an issue with signal connectivity and the LCP-1730-01 or LCP-2730-01 or PCS is no longer receiving or sending signals from/to the MCC or the equipment.
- For smaller pieces of equipment like the flow meter, the communication and general FAILs are combined into a general alarm for communication to the PCS. However, individual alarms shall be identified at the LCP-1730-01 or LCP-2730-01.
- FAIL signals for the dewatering system will be displayed on LCP-1730-01 or LCP-2730-01 for each component

4.3 PCS TO LCP-1730-01 OR LCP-2730-01 COMMUNICATION

A. The PCS will send the following signals to the SDS control panel:
- ENABLE signal for system
- Communication FAIL

B. LCP-1730-01 or LCP-2730-01 will send the following signals to the PCS:

Sludge Pumps:
- RUN indication for sludge pumps
- Pump speed set point for sludge pumps
- Flow rate from DS flow meter

Dewatering System:
- General ALARM indication for Dewatering System
- RUN indication for Dewatering System
- RUN status for each flash mixer, floc mixer, screw press, screw conveyor, polymer pump, polymer mixer
- LOW water pressure alarm
- LOW polymer flow alarm
- E-Stop Activated indication for screw conveyor

PART 5 - EMERGENCY SHUT DOWN AND POWER FAILURE

5.1 EMERGENCY SHUTDOWN

In the event of an emergency shutdown of the sludge pump by moving the LOS disconnect switch to the OFF position or because of equipment failure, an ALARM will be generated at the LCP-1730-01 or LCP-2730-01 and PCS.

5.2 POWER FAILURE

In the event of a power failure, any equipment that was running in AUTO or HAND will be started up once the standby generator comes online. Equipment startup is controlled by the PCS, which staggers startup of the process equipment to reduce instantaneous load on the standby generator.

PART 6 - CONTROL SYSTEMS DETAILS

6.1 CONTROLS AND INTERLOCKS

A. PCS Interlocks
- The lack of enable signal from the PCS to the LCP-1730-01 or LCP-2730-01 will prevent the sludge pump from running in either HAND or AUTO mode.
- The pump temperature and high pressure switches will prevent the sludge pump from running either in AUTO or HAND mode.

6.2 PLANT CONTROL SYSTEM TAGS

Legend:
- D – Display on a screen
- S – Display and operator input on a screen

- Alarm Level Priority 1
- Alarm Level Priority 2
- Alarm Level Priority 3
- L – Logged to database
- T – Display on trend

Table 4 lists the PCS tags and signals. The following list may not contain all required Plant Control System tags and signals. The contractor is to do a detailed take-off from all drawings and specifications and determine all required tags and signals. For the HMI, use a red light or red text to indicate a fault has occurred, or a level float has been switched on.

Table 4: Sludge Dewatering System Signals

Signal Description	Display and Register Type	Alarm Level	Trend/Logging	Notes
Sludge Pump 1 LOS in Auto	D			
Sludge Pump 1 Running Mode	D	:	L	
Sludge Pump 1 Faulted Mode	D	2	L	
Sludge Pump 1 External Fault	D	2	L	
Sludge Pump 1 Comm. Fault	D	2	L	
Sludge Pump 1 Current	D		L,T	
Sludge Pump 1 Speed Feedback	D		L,T	
Sludge Pump 1 Speed Setpoint in PCS	S			
Sludge Pump 1 Runtime Hours	D		L	
Sludge Pump 2 LOS in Auto	D			
Sludge Pump 2 Running Mode	D	:	L	
Sludge Pump 2 Faulted Mode	D	2	L	
Sludge Pump 2 External Fault	D	2	L	
Sludge Pump 2 Comm. Fault	D	2	L	
Sludge Pump 2 Current	D		L,T	
Sludge Pump 2 Speed Feedback	D		L,T	
Sludge Pump 2 Speed Setpoint in PCS	S			
Sludge Pump 2 Runtime Hours	D		L	
Sludge Pump 1 Lead	D			
Sludge Pump 2 Lead	D			
Sludge Pumps Advance Alternator	S			
Sludge Flow Rate Setpoint	S			
Flow Meter Flow Value	D		L,T	
Flow Meter Totalized Flow	D		L,T	
Flow Meter Daily Totalized Value	D		L,T	

Signal Description	Display and Register Type	Alarm Level	Trend/Logging	Notes
Flow Meter Flow Totalizer Reset	S			
System Switch in Manual	D			
System Switch in Auto	D			
Start Feed System – Volute Press Command	D			
Volute Press Polymer Started	D			
Volute Press Polymer Flow	D		L, T	
Volute Press Polymer Low Flow Alarm	D	2	L	
Volute Press Polymer Low Water Pressure Alarm	D	2	L	
Volute Press E-Stop Activated Alarm	D	2	L	
Volute Press Conveyor E-Stop Activated Alarm	D	2	L	
Volute Press Flow Out of Range	D	2	L	
Volute Press Running in Manual	D			
Volute Press Running in Auto	D			
Volute Press Running in Auto – Drums Extended Run	D			
Volute Press Running in Auto – Conveyor Extended Run	D			
Volute Press Ready	D			
Flash Mixer Running	D		L	
Floc Mixer Running	D		L	
Volute Press Drum Running	D		L	
Conveyor Running	D		L	
Volute Press Spray Started	D			
Floc Tank High Level	D	2	L	
Floc Mixer VFD Fault	D	2	L	
Flash Mixer VFD Fault	D	2	L	
Dewatering Drum VFD Fault	D	2	L	
Conveyor Fault	D	2	L	
Conveyor Motion Detector Fault	D	2	L	

END OF SECTION

SECTION 462113 – SCREENING AND GRIT REMOVAL SYSTEM – GENERAL – WWTP

PART 1 - GENERAL

1.1 WORK INCLUDED

A. This section covers the work necessary to furnish and install, complete, two (2) headworks systems, one (1) for the Hospital WWTP and one (1) for the Hon-Dah WWTP, for outdoor installation.

B. The headworks system for each WWTP shall consist of one (1) tank mounted coarse screen and grit removal package headworks, two (2) tank mounted fine screens and one (1) tank mounted manual bar screen, and all necessary appurtenances and controls for a complete and working system.

C. Related Sections:

1. The work of the following sections includes Detail Equipment Specifications. The screening system Manufacturer is responsible for coordination of all items included in these specifications unless expressly noted otherwise.
   a. Section 462113.01, DETAILED EQUIPMENT SPECIFICATION: COARSE SCREENING AND GRIT REMOVAL PACKAGE SYSTEM-WWTP
   b. Section 462113.02, DETAILED EQUIPMENT SPECIFICATION: FINE SCREENING-WWTP
   c. Section 462113.03 DETAILED EQUIPMENT SPECIFICATION: MANUAL BAR SCREEN-WWTP
   d. Division 40, PROCESS INTERCONNECTIONS-WWTP
   e. Division 26, ELECTRICAL-WWTP
   f. P&ID Drawings

1.2 GENERAL

A. See GENERAL CONDITIONS and Division 1, GENERAL REQUIREMENTS, which contain information and requirements that apply to the work specified herein and are mandatory for this project.

B. All equipment shall be compliant with Federal Acquisition Register the clause 52.225-11, Buy American-Construction Materials under Trade Agreements (Nov 2023) and provision 52.225-12, Notice of Buy American Requirement-Construction Materials under Trade Agreements (May 2014).

1.3 MANUFACTURER'S SERVICES

A. Manufacturer's services shall be provided in accordance with Section 019113, GENERAL COMMISSIONING REQUIREMENTS, and the following:

1. A factory representative shall inspect the installation after completion of the installation and shall recommend, in writing to the Contractor, all necessary adjustments to the equipment for satisfactory operation. Specific services to be performed shall include the following:
   a. Be present during installation and alignment of equipment.
   b. Check the completed installation and provide written certification to the Engineer that the unit is properly installed and ready for operation.
   c. Direct initial startup and preside at field test of equipment.
   d. Provide training of Owner's operating and maintenance personnel in equipment operation, maintenance, and troubleshooting.
   e. Provide startup services at such times as requested by the Owner.

2. A qualified Manufacturer's representative for the equipment specified shall be present at the jobsite and/or classroom designated by the Owner for the minimum person-days listed, travel time excluded. For each WWTP, the following services shall be provided in a minimum of two trips:
   a. 3 person-days minimum for installation assistance, functional testing, and certification of the installation.
   b. 1 person day minimum for Owner training (classroom and hands-on).
3. A qualified Manufacturer's representative shall be one who has had at least 2 years of experience in the installation of the equipment specified herein. Manufacturer shall submit written verification of representative's qualifications as part of the Submittal process.
4. Startup services and training of Owner's personnel shall be at such times as requested by the Owner, and shall include:
   a. Instruct plant personnel in the operation and maintenance of the equipment system specified herein.
   b. Training sessions shall include, but not be limited to, a classroom session and a hands-on session.
   c. The training sessions shall include preventive maintenance requirements, overhaul and troubleshooting instructions, and normal operating practices.

B. Submit a certification of proper installation and satisfactory performance as specified in Part 3 of these Specifications.

C. If there are difficulties in operation of the equipment due to the Manufacturer's fabrication and programming or Contractor's installation, additional service shall be provided at no extra cost to the Owner.

1.4 SUBMITTALS

A. Submittals shall be made as required in Section 013300, SUBMITTAL PROCEDURES. In addition, the following specific information shall be provided:
1. Complete specifications, drawings, and descriptive literature on the equipment and any exceptions to these Specifications. At a minimum, the following information shall be included:
   a. Dimensional plan and section drawings of the equipment, showing all utility connections and requirements, connections to other equipment, and anchor bolt locations. Where applicable, drawings will show connection to associated equipment provided by others.
   b. Equipment weights and lifting points.
   c. Bill of materials.
   d. Catalog cut sheets, descriptive literature, and materials of construction for all equipment, including solenoid valves.
   e. Seismic calculations for all equipment supports for seismic requirements listed in the Structural Drawings.
   f. Electric motor operating data for all motors, including Manufacturer's catalog information, complete dimensional data, wiring diagrams, and performance data.
   g. Range and settings of indicators, instruments, timers, and other related devices.
   h. PLC communication data map.
   i. Screen system control panel engineered shop drawings including but not limited to bill of material table, panel layouts, control narrative, equipment data sheets, and description of operation.
   j. Wiring diagrams in the form of ladder logic.
   k. Instrumentation shop drawings.

2. Hydraulic calculations demonstrating equipment can process the maximum specified flows.
3. Functional testing plan as required in this Specification.
4. Factory and field test results as required in this Specification.
5. List of Manufacturer supplied spare parts.
6. Submit qualifications of the Manufacturer's representative.
7. Installation Manual containing instructions to be followed in the installation of the equipment, motor, gearbox and local control panel.
8. Operations and maintenance (O&M) manual.
9. A copy of manufacturer's warranty.

1.5 QUALITY ASSURANCE

A. All equipment covered herein shall be furnished by one Manufacturer and shall include all necessary appurtenances for a complete and working system. The equipment shall be the product of a single Manufacturer regularly engaged in the production of equipment for the specified use. The Manufacturer shall have the sole responsibility for the proper functioning and coordination of the equipment as furnished.

B. The manufacturer shall have an established ISO 9001 certified quality management system, or an internal quality assurance program which closely resembles ISO 9001 requirements. Manufacturers without an ISO 9001 program must provide complete documentation on their existing quality management system with supplemental information clarifying why areas do not meet ISO 9001 standards.

C. The screen manufacturer shall have a minimum of five (5) years design and manufacturing experience with screw screens, with no less than fifteen (15) units of similar size installed in North America, and that have been installed for at least five (5) years.

D. No stainless-steel components may be fabricated or assembled in the same room where carbon steel products are fabricated in order to prevent contamination by rust.

E. All stainless steel components and structures shall be passivated in accordance with passivation methods outlined in ASTM-A380. If stainless steel from the mill is already immersion passivated, only the surface areas affected by fabrication (welding, drilling, grinding, etc.) or contamination need be re-passivated.

F. All welding shall be performed in accordance with American Welding Society, European Welding Federation, International Institute of Welding, or equivalent, standards.

G. All equipment shall be designed, fabricated, and assembled in accordance with recognized and acceptable engineering and shop practice. Individual parts shall be manufactured to standard sizes and thicknesses so that repair parts can be installed in the field. Like parts of duplicate units shall be interchangeable. Equipment shall not have been in service prior to delivery, except as required by testing.

H. Each major component of equipment shall have the manufacturer's name, address, and product identification on a nameplate securely affixed to the equipment.

1.6 REFERENCE STANDARDS

A. AGMA, American Gear Manufacturers Association

B. ASME, American Society of Mechanical Engineers

C. ASTM, American Society of Testing and Materials

D. Section A322: Carbon and Alloy Steel Bar Specification

E. Section A506 – 10: Standard Specification for Drawing Alloy Steel, Sheet and Strip, Hot-Rolled and Col Rolled.

F. ASPC, America Structures Painting Council

G. AISI, American Iron and Steel Institute

H. AISC, American Institute of Steel Construction

I. ANSI, American National Standards Institute

J. NEC, National Electric Code

K. ABMA, American Bearing Manufacturers Association

L. AWS, American Welding Society

M. ISO, International Organization of Standardization
   1. ISO 281:2007 Calculation Method for Fatigue Life of Roller Bearings

1.7 WARRANTY

A. The Manufacturer shall warrant that its equipment shall be free from defects in material and workmanship; and that it will replace or repair, any part or parts for which examination shall show to have failed under normal use and service by the Owner within one (1) year following the date of Substantial Completion following successful functional testing.
   1. The Manufacturer shall be responsible for freight associated with shipping defective equipment to the factory.
   2. The warranty period shall include phone and email support.

B. This warranty shall not be encumbered nor limited by the number of hours of equipment operation time. Warranties that restrict coverage to operating conditions or limitations on hours of operation time are not acceptable.

1.8 OPERATION AND MAINTENANCE MANUALS

A. Operation and Maintenance Manuals for the equipment specified herein shall be furnished as specified in Section 017823, OPERATION AND MAINTENANCE DATA.

B. The O&M manuals shall contain at a minimum, full descriptions of all equipment specified herein, motor data, replacement and spare parts lists, and detailed instructions for all operation and maintenance tasks to be performed by the operator.

C. A spare manual shall be shipped with the equipment in order to allow for proper installation and operation of the equipment prior to the release of all final Installation, Operation, and Maintenance manuals.

PART 2 - PRODUCTS

2.1 GENERAL

A. “Basis-of-Design Products:” The first named Manufacturer’s system was used as the basis of design for this Specification and the Drawings. The structures and facilities appurtenant to the package headworks, and fine screens shall meet the basis of design in quality and capacity. Equipment furnished by all qualified, interested Manufacturers will be considered, provided the necessary structural, electrical, and mechanical changes required are submitted in conformance with the requirements of the GENERAL CONDITIONS and DIVISION 1, GENERAL REQUIREMENTS. The Contractor shall be responsible for all design changes associated with other Manufacturers’ equipment and shall bear all costs for necessary changes for a complete and satisfactory installation.

B. Nameplates with the name of the Manufacturer, equipment model number and all other pertinent data shall be affixed at a visible and accessible location on all equipment.

2.2 MANUFACTURERS

A. Huber

B. Saveco

C. Or approved equal.

2.3 MATERIALS

A. All equipment shall be constructed of stainless steel, unless otherwise noted.

B. Unless otherwise noted, stainless steel refers to AISI 316 stainless steel.

2.4 ENVIRONMENTAL CONDITIONS

A. The equipment covered under this specification will be installed outdoors in the headworks room, as shown in the Drawings.
   1. The headworks room will be open to atmosphere and have a roof for protection from rain and sun.
   2. The space within 10 feet of the headworks equipment tanks is classified as Class 1. Div 2.
   3. The space within the stainless-steel equipment tanks is classified as Class I, Div. 1.
   4. Equipment, electrical assemblies, related electrical wiring, instrumentation, controls, and system components shall comply with specific NEC requirements related to area classification and to NEMA 250 and ICS-6 designations specified herein.
   5. The Manufacturer control panel will be installed in a separate NEMA 12 area in the electrical room.

B. Ambient temperature ranges:
   1. Hospital WWTP: 20 Deg F - 100 Deg F.
   2. Hon-Dah WWTP: 0 Deg F – 120 Deg F

C. Relative humidity ranges between 15 and 90 percent.

2.5 CONFIGURATION REQUIREMENTS

A. The headworks equipment shall fit into the allotted space while maintaining the clearances between equipment, and clearances between equipment and walls, as indicated on the drawings.

B. The headworks equipment shall be oriented such that the screens and grit screw augers can be removed and/or accessed for maintenance per the Manufacturer's recommendations.

C. The headworks equipment shall be oriented such that owner-supplied trash receptacles are easy to access and can be removed from the room without obstacles.

D. The coarse screen and fine screens shall be as similar in design and operation as possible to minimize differences in maintenance and operations.

2.6 ANCHOR BOLTS

A. Unless otherwise specified, Contractor shall furnish all anchor bolts of ample size and strength required by the Manufacturer and these documents to securely anchor each item of equipment. Anchor bolts, hex nuts, and washers shall be AISI Type 316 stainless steel. Anchor bolts shall be wedge or epoxy type and be set by the Contractor.

2.7 SYSTEM ACCESSORIES

A. Warning signs: Provide three (3) self-adhesive Warning signs with a design per Standard Detail 10136 to be mounted on the screen enclosure and wash press enclosure with the following text: "THIS EQUIPMENT STARTS AND STOPS AUTOMATICALLY."

B. Identification Plate: An identification plate shall be securely mounted on each equipment unit, the local operator stations, and the control panel, in a readily visible location. The plate shall provide the Manufacturer, Manufacturer phone number, equipment model number, and equipment serial number.

C. Lifting Lugs: Equipment weighing over 100 pounds shall be provided with lifting lugs.

D. Trash receptacles will be Owner-supplied. Contractor shall coordinate trash receptacle style with local garbage collection company to ensure the correct style is purchased.

2.8 ELECTRICAL COMPONENTS AND ACCESSORIES

A. Provide all instruments and electrical devices required for the operation of the system as specified in this Section and indicated on the Drawings. Electrical components and wiring shall be provided and installed in accordance with the National Electric Code (NEC) and additional Montana State requirements as necessary. Note that the equipment in this Section will be installed in a Class 1, Division 2, hazardous, corrosive, and wet area.

B. Provide all items not specifically called out which are required to implement the functions required for proper operation of the system. Where not specified, Manufacturer's standard equipment shall be provided.

C. Electrical Devices: Electrical device interconnecting conduit and wiring shall be the responsibility of the installing contractor.

D. Provide any other instrumentation included in the Manufacturer's standard equipment package.

E. Protection Devices
   1. All equipment motors shall have solid state thermal overload protection, which shall cut the power off to the motor and to the control circuit of the motor starter regardless if the motor is operating in AUTO or HAND mode. The thermal overload protection shall be sized according to the motor nameplate full load rating.
   2. All equipment motors shall have jamming protection through motor / VFD current sensors on all motor phases or high torque switches, which shall cut the power off to the motor and to the control circuit of the motor starter regardless if the motor is operating in AUTO or HAND mode.

2.9 CONTROL PANEL

A. For each WWTP, a single main control panel for all the equipment shall be furnished with a lockable, free standing enclosure, suitable for wall mounting and installation in an air-conditioned NEMA 12 indoor environment.
   1. The Hospital WWTP control panel shall be labeled: Screening and Grit Removal System Control Panel LCP-1110-01.
   2. The Hon-Dah WWTP control panel shall be labeled: Screening and Grit Removal System Control Panel LCP-2110-01.

B. Control panels and electronic communication devices must comply with all US Federal regulations.

C. The control panels shall be made by a U.L. listed company and bear a U.L label.

D. Control panel wiring shall be color coded, neatly cabled and supported in non-flammable wiring tracks. Wiring shall be minimum 14 gauge MTW stranded wire.

E. The control panels shall have a nameplate with the label "Headworks Control Panel" and nameplates specifying which switches, controls, and alarms are associated with which piece of equipment.

F. The control panels shall be no larger than 60" wide, 74" tall, and 12" deep.

G. The Headworks Control Panel will be supplied with 480V, 3ph, 3W power. Power supply for all equipment and instruments supplied by the equipment Manufacturer shall be provided from the Headworks Control Panel. A step-down transformer shall be included in the panel.

H. Control items provided with the equipment specified in this Section shall provide complete manual and automatic operation of the screening process with protection against conditions which might damage the equipment.

I. Each control panel shall contain all power and control devices necessary for the proper function of all the headworks equipment covered in this Section, and shall be clearly designate which equipment the controls are associated with.

J. Local operating stations shall be provided as follows:
   1. A minimum of three (3) local operator stations shall be provided. One (1) for the coarse screen and grit removal package headworks, and one (1) for each fine screen, with minimum functionality as specified on the P&IDs.
   2. Local operator stations shall be suitable for outdoor installation and be NEMA 4X rated for a Class 1 Div 2 environment.
   3. Local operator stations shall be clearly labeled with the corresponding equipment name and the tag shown on the P&ID Drawings.

K. Control panel and local operating station functionality shall be as detailed on the P&ID, including but not limited to:
   1. 600-Volt rated main circuit breaker disconnect with lockable handle
   2. 480 – 120 Volt control power transformer
   3. Transient voltage surge suppressor TVSS, 120 V AC single phase
   4. Panel ventilation fan with thermostat
   5. NEMA motor starters, variable frequency drives, and Circuit Breaker Branch Circuit Protection for all electrical motors. The VFDs shall be Manufacturer's standard. The VFDs shall be selected to match motor size, current and torque requirements.
      a. Master control panel hand-off-automatic switch.
      b. Three-way selector switches for the following:
         1. (3) Screen drive hand-off-automatic (HOA)
         2. (3) Screen forward-off-reverse (FOR)
         3. (1) Horizontal grit screw HOA
         4. (1) Inclined grit screw HOA
         5. (1) Inclined grit screw FOR
         6. (1) Grit Blower HOA
         7. (3) Screen Basket spray bar solenoid valve HOA
         8. (3) Screenings wash solenoid valve HOA
         9. (3) Screen press zone solenoid valve HOA
         10. (3) Screen housing spray nozzle solenoid valve HOA
      c. Pilot lights for:
         1. (1) Control power on (white)
         2. (3) Screen running (green)
         3. (3) Screen high level (amber)
         4. (3) Screen fault (red)
         5. (1) Horizontal grit screw running (green)
         6. (1) Inclined grit dewatering screw running (green)
         7. (1) Grit blower running (green)

d. (6) E-stop push button (red)
e. (3) Screen reset push button
f. (1) Horizontal grit screw reset push button
g. (1) Inclined grit screw reset push button
h. Alarm silence buttons
i. Digital inputs for the following:
   1. (3) Equipment start water level
   2. (3) Maximum water level
j. Remote dry contact outputs for the following:
   1. (3) Screen Running
   2. (3) Screen Fault
   3. (2) Grit Screw Running
   4. (2) Grit Screw Fault
   5. (3) High water level
   6. (1) spare output
k. Control relays, wiring and circuitry required to implement the control logic
l. Programmable logic controller (PLC)
m. Operator interface screen

6. The equipment Manufacturer shall provide the final versions of PLC and HMI programs.

2.10 CONTROL NARRATIVE:

A. HOA switches for all equipment shall be available through the Plant Control System (PCS), the control panel, and the local operator stations (LOSs).

B. The manufacturer-provided control panel shall be able to transmit all signals to the PCS via Ethernet.

C. In AUTOMATIC mode:
1. Screen Operations:
   a. Screen operation will be controlled by one level sensor and based on a timer. Screen operation shall initiate, at a minimum when (1) when the upstream level sensor detects a specified high water level or (2) after a predetermined time has passed since last operation.
   b. Screen operations shall stop when (1) the upstream water level is below a specified value and the high water alarm clears, or (2) after a certain run time has expired (if operation was initiated by the timer).
   c. Control logic shall be included with the VFD to provide overload protection in the case of a blockage that would stall the screen conveyance screw. This mode shall reverse the travel direction of the screw for a set period of time before resuming forward operation. This cycle is attempted up to three (3) times, if unsuccessful a general fault alarm is initiated. A manual reset is required to correct.
2. Grit Screw Operations:
   a. Grit screws shall operate based on time between runs and run for a specified amount of time before turning off. Both the time between runs and run time shall be operator adjustable.
   b. If the horizontal grit screw is running, the inclined grit screw shall also be running.
   c. Control logic shall be included with the grit screw VFDs to provide overload protection in the case of a blockage that would stall the screws. This mode shall reverse the travel direction of the screw for a set period of time before resuming forward operation. This cycle is attempted up to three (3) times, if unsuccessful a general fault alarm is initiated. A manual reset is required to correct.

D. In HAND mode:
   a. The screens or grit screws shall run until the operator turns the equipment to OFF mode or a fault occurs.
   b. The operator shall be able to run the screen and grit screw assemblies by selecting FORWARD or REVERSE direction from the FOR switch, if applicable.

PART 3 - EXECUTION

3.1 PREPARATION FOR SHIPMENT, STORAGE, AND PROTECTION

A. Equipment and materials shall be prepared and protected for shipment and shipped in accordance with the requirements of Division 1, GENERAL REQUIREMENTS.

B. The contractor shall be responsible for receiving the equipment, unloading it from the common carrier, and storing it safely until it is ready to be installed.

3.2 EQUIPMENT INSTALLATION

A. The equipment shall be installed in compliance with all OSHA, local, state and federal codes and regulations.

B. The equipment specified herein shall be located as shown in the Drawings. Equipment shall be installed in strict conformance with the Manufacturer's installation instructions, as approved, and as specified herein.

C. The contractor shall verify all dimensions in the field to ensure compliance of equipment dimensions with the drawings. Contractor shall notify the engineer of significant deviations.

D. Installation shall utilize standard torque values and be installed secure in position and neat in appearance. Installation shall include any site preparation tasks, pre-installation tasks as determined by the Manufacturer and any other installation tasks and materials such as wiring, conduit, and controls stands as specified by the Manufacturer.

3.3 FIELD PREPARATION AND PAINTING

A. Finish field preparation and painting shall be performed as specified in Section 099600, HIGH PERFORMANCE COATINGS-WWTP.

B. Shop and field painting shall be in accordance with Manufacturer's standard paint system for the specified equipment.

C. The Contractor shall touch-up all shipping damage to the paint and stainless steel as soon as the equipment arrives on the job site.

D. The Manufacturer shall supply paint for field touch-up and field painting.

E. Electrical motors, speed reducers, and other self-contained or enclosed components shall be factory primed and painted and no field painting shall be necessary except for touchup as required.

F. Prior to assembly the Contractor shall coat all stainless-steel bolts and nut threads with a non-seizing compound.

G. Contractor shall passivate all field welds.

3.4 FACTORY TESTING

A. All Manufacturer supplied equipment shall be inspected and factory operated for at least four hours prior to shipment. At a minimum, equipment shall be checked for noise and vibration, and amperage draw.

B. Certified factory test reports shall be submitted in accordance with the detailed equipment specifications.

3.5 FIELD ACCEPTANCE TESTS

A. After the equipment is installed and the complete screening system is operational, testing of the system by the Contractor is required in accordance with these equipment specifications. The Manufacturer shall provide one factory-trained representative on site, as described hereinbefore, to perform the following services.

B. Functional Test: Prior to allowing raw influent flow to resume, all equipment described herein shall be inspected for proper alignment, lubrication, quiet operation, proper connection, and satisfactory performance by means of a dry functional test. Once raw wastewater is flowing in the channel, a wet functional test shall be performed.

1. The dry functional test shall include measurement of amperage draw for the screen and washer/compactor. Fail situations shall be simulated by jamming the screen and wash press.
2. The wet functional test shall include operation under normal operating conditions with raw influent for a period of 21 days. Plant staff will log operating parameters and performance during this time. Manufacturer’s representative shall be available by phone and email for troubleshooting as needed.
   a. Controls and Communication: The system shall be operated to simulate all FAIL conditions to test that fail-safes, E-stops and alarms are responding as designed. Communication between the screening system controls and plant control system shall be tested for all operational scenarios (HAND, AUTO).
3. Contractor shall submit a functional testing plan a minimum of 14 days prior to testing. Contractor shall coordinate the plan with the Manufacturer.

C. As a condition precedent to final acceptance of the work, the Manufacturer's representative shall demonstrate to the Engineer that the equipment has been properly installed, aligned, and tested and meets all requirements for satisfactory performance under the conditions specified herein. Should the Engineer determine during the testing that the equipment does not perform to or meet the requirements as specified herein, the Contractor shall perform the necessary modifications or make necessary replacements. Should the equipment be rejected by the Engineer, the Contractor shall be liable for delays and consequential damages incurred by the Owner up to and including the full amount of the Contractor's performance bond.

D. In addition, the Contractor shall be subject to all costs for removal of the defective equipment and replacing, restoring, start-up and testing of the equipment as required for a satisfactory installation as specified.

3.6 MANUFACTURER'S CERTIFICATE

A. Provide Manufacturer's certificate for the proper installation and operation of the equipment in accordance with Section 019113, GENERAL COMMISSIONING REQUIREMENTS in Division 1, GENERAL REQUIREMENTS.

1. Certificate shall include all recorded field acceptance testing results and data.

END OF SECTION

SECTION 462113.01 – DES: COARSE SCREENING AND GRIT REMOVAL PACKAGE SYSTEM – WWTP

PART 1 - GENERAL

1.1 WORK INCLUDED

A. This section covers the work necessary to furnish and install two (2) coarse screening and grit removal package headworks, one (1) for the Hospital WWTP and one (1) for the Hon-Dah WWTP, and all necessary appurtenances for complete and working systems.

B. The coarse screen and grit removal equipment shall be contained in the same stainless steel tank.

C. See Section 462113, SCREENING AND GRIT REMOVAL SYSTEM – GENERAL-WWTP, for additional requirements.

1.2 SUBMITTALS

A. Submittals shall be made as required by Section 462113, SCREENING AND GRIT REMOVAL SYSTEM – GENERAL-WWTP.

PART 2 - PRODUCTS

2.1 GENERAL

A. The tank-mounted coarse screening and grit removal package headworks systems shall be provided by the same Manufacturer of the fine screens.

2.2 EQUIPMENT NUMBERS

A. The major pieces of equipment included in the package headworks and covered under this specification are:

Equipment Description	Hospital WWTP Equipment Numbers	Hon-Dah WWTP Equipment Numbers
Automatic Coarse Screen	1110-CS-01	2110-CS-01
Horizontal Grit Screw Conveyor	1120-SCV-01	2120-SCV-01
Inclined Grit Screw Conveyor	1120-SCV-02	2120-SCV-02

2.3 MANUFACTURERS AND MODELS

A. Basis of Design: Huber Rotamat Complete Plant Ro5/30

B. Equal: Saveco SAVI Flo-Drum Tank Mounted VSA 600/6-T and SPECO WasteMaster Grit Removal System DSF2 – S20

2.4 DESIGN REQUIREMENTS

A. The equipment shall meet the following design criteria.

Design Parameter	Hospital WWTP Design Value	Hon-Dah WWTP Design Value
Number of package units	1	1
Annual Average Flow Rate (per unit)	125,666 gpd	104,100 gpd
Peak Hour Flow Rate (per unit)	680,000 gpd	680,000 gpd
Screen Type	Rotary drum perforated plate	
Screening Perforation Size	6 mm (1/4”)	
Minimum Screenings Capture Ratio	66 percent	
Grit Removal Type	Aerated Grit Settling Chamber	
Grit Removal Efficiency @ Peak flow	90% ≥ 212 µm (#70 mesh)	
Screenings	Shall meet EPA Paint Filter Test per EPA method 9095	

B. Configuration Requirements: Shall be as specified in Section 462113, SCREENING AND GRIT REMOVAL SYSTEM – GENERAL-WWTP.

C. Performance Criteria:
   1. All equipment shall be capable of processing the influent wastewater which is combined raw, domestic wastewater and hospital wastewater. Screening materials will include organic matter, rags, plastics, and large debris, including rocks, cans, sticks, branches, and lumber.
   2. The screen shall be capable of processing spherical objects with a diameter 3-1/8” inches. Such objects shall be conveyed through the auger and discharged with screenings.

2.5 TANK

A. The tank unit shall be all stainless steel. The screen and grit screw conveyors are integral to the tank.

B. The grit chamber shall have a hopper shaped body.

C. The tank shall be completely enclosed have a minimum side wall thickness of 0.12” and be adequately stiffened to prevent distortion during transport, installation, and operation.

D. The tank shall be furnished with adjustable support legs. The legs shall be adjustable, at a minimum, by plus or minus ¾-inch.

E. The tank shall have flanged inlet and outlet connections. Flanges shall be Class 150 ANSI/ASME B16.5 rated.

F. The tank shall have an overall maximum width of 3’-9” and overall maximum flange to flange length of 14’-6”.

G. The tank shall be provided with a hinged stainless steel access covers to access the grit removal and screening equipment as needed for all maintenance and repair tasks. Access covers shall be complete with gasket and turn-lock. Covers shall be designed such that leakage does not occur even in case of a seal failure. Covers over the grit tank, shall be provided a minimum of two stainless steel pneumatic cylinders to assist opening and closing covers

2.6 SPRAY WASH SYSTEM

A. The wash system shall be automatic and operated on an intermittent basis. Washing capabilities shall be provided, at a minimum, to the screen housing tank, the screen basket, a screenings wash zone, and a compaction zone.

B. The wash system shall be capable of utilizing treated effluent as water supply.

C. All wash systems shall be completely enclosed to prevent spray water, aerosols, and leakage contaminating the operating floor level.

D. The screen housing tank wash system shall be provided by a rotating spray nozzle so that all the interior surfaces of the screen tank housing can be covered by the spray water.

E. The compaction wash zone shall be provided by a flush system that ensures complete flushing of the compaction zone housing.

F. Each wash zone shall have a dedicated solenoid valve. A water manifold with one input connection shall be provided and connected to the solenoid valves. The common water connection shall be provided with a brass body Y-strainer. The strainer shall include a removable and washable stainless steel 20 mesh filter element.

G. From the common manifold, each wash zone shall be provided with minimum 1 inch diameter piping and flexible reinforced PVC hoses.

H. Each solenoid valve shall be minimum 1 inch diameter, brass body, 2-way, and designed for 120 VAC operation. Solenoid valves shall be normally closed and rated for up to 100 psig.

I. The solenoid valves shall be operated by the Manufacturer provided programmable logic controller (PLC). Individual manual operation of each solenoid shall be possible from the control panel. The cleaning characteristics of the screen and wash system shall be able to be adjusted via the PLC.

2.7 PERFORATED PLATE COARSE SCREEN

A. General
   1. The screen shall be a rotary drum screen with perforated plate screen basket with perforation size as specified above. The screen shall have a completely enclosed integrated washer, compactor, conveyor, and include a bagging attachment.
   2. The screening system shall include an integrated overflow manual bar screen that routes raw wastewater to the grit chamber should the coarse screen fail.
   3. The screen shall utilize a single drive for screening, conveying, dewatering and compressing the screened material.
   4. Operation of the screen drive shall be automatically initiated at a preset high upstream water level.

B. Level Control
   1. The Manufacturer shall supply the required level sensing equipment for proper equipment operation. Electrical device interconnecting conduit and wiring shall be the responsibility of the installing contractor.

2. Level control instrumentation shall be the manufacturer standard.
3. Level control instrumentation shall be mounted to ensure proper operation.
4. All mounting parts shall be stainless steel.
5. Level control instrumentation shall be rated for Class 1, Division 1 explosion hazard location.

C. Screen Basket
1. The perforated screen basket shall have a cylindrical or semi cylindrical shape. It shall be installed parallel to the wastewater flow direction.
2. The screen basket shall be provided with a bottom plate lying flat on the tank floor. The screen shall be provided with an upper support flange and a conical transition piece between the screen basket and auger tube.
3. The average perforation flow through velocity shall not exceed 3.3 feet per second under any flow condition. The screen shall minimize solids deposition within the flow stream.
4. The screen shall be designed to withstand maximum forces exerted during operation. All structural and functional members shall be sized to prevent deflection or vibration which could impair operation.
5. A seal plate shall be provided between the screen and the stainless steel tank. The seal plate shall be one-piece fabricated of stainless steel plate. The sealing plate shall be of sufficient height to prevent bypassing of flow around the screen at the maximum screen hydraulic capacity. A polyurethane seal, affixed to the stationary face baffle and folded to the inside periphery of the rotating drum (hydrostatic pressure of the water inside the drum shall aid in the seal), shall be provided to ensure that there will be no bypass of unwanted solids through the screen.

D. Screenings Conveyor and Screenings Wash Press
1. The conveyance screw shall be shafted and have helicoid-shaped flights designed to remove solids from the screenings basket at a 35 or 45 angle. The screenings shall be transported up the screw conveyor through a washing and compaction zone, and be conveyed through a chute to be discharged into an owner-provided trash receptacle, or with the bagging attachment.
2. The flights of the screw in the screen basket shall be provided with ¼-inch thick hardened stainless steel strip having the same thickness as the flights of the screw. The strip shall be welded to both sides of the flights, over the full length of the screen basket. The flights of the screw shall me machined to match the screen basket such that the face of the strip is parallel to the screen basket's inner surface.
3. The screw conveyor's tube diameter shall have a minimum wall thickness of 0.1 inch (2.6 mm). Two (2) anti rotation bars shall be welded to the inside, or bolted from the outside, of the transport tube along its longitudinal axis for continuous and controlled screenings transport. The screenings screw conveyor shall not be in contact with the anti rotation bars during normal operation. Screens which utilize wear bars that require replacement as part of a normal maintenance program shall not be acceptable.
4. A flange shall be welded to the conical transition piece to support and allow for removal of the screen basket.
5. A gear box support flange shall be welded to the upper end of the auger tube for support and removal of the drive assembly. The flange thickness shall be a minimum of 0.46".

6. A shafted stainless steel screw with helical flight shall be installed in the auger tube for consistent conveying, dewatering, and proper compaction of the screened material. A shafted screw design shall have a rigid structure to prevent screw flexing and shall distribute the drive load uniformly. The shaft shall have a minimum diameter of 3 ½ inches (89 mm) and shall have flights with a thickness of ¼ inch in the transport zone and a minimum thickness of 0.4” (10 mm) in the compaction zone. A shaft-less screw in the auger tube shall not be acceptable.
7. A replaceable auger wear strip shall be installed on the flight edge for screw and brush wear protection.
8. The upper and lower end of the screw conveyor shaft shall be fitted with a solid stub. The stub and the screw conveyor shaft shall be accurately machined and shrink-fitted with each other. The entire screw shall be balanced and machined to ensure perfect alignment, screw conveyors with bolted on stub shafts shall be unacceptable due to lack of improper alignment.
9. After all flanges are welded to the auger tube, the faces of the flanges shall be machined on a lathe such that they are exactly rectangular to the tube axis.
10. The lower end of the screenings conveyor shall be supported by a sealed, self-lubricated, slide bearing. This bearing shall not take any thrust load from the screw conveyor. Lower ball or roller bearings, or bearings requiring lubrication, shall not be acceptable.
11. The lower bearing shaft and arm shall be designed to minimize material wrapping around the shaft. A seal plate shall be furnished to mate between the stationary lower bearing support and the rotating arm to prevent material intrusion into the bearing seals.
12. A compaction zone shall be provided as an integral part of the screw conveyor and tube. The compaction zone shall be designed to form a plug of screenings material and to return water released from the screened material back to the tank through perforations that are machined into the screenings transport tube.
13. The compaction zone shall be provided with split glass fiber reinforced or stainless steel housing, furnished with gaskets and bolts, and shall be easily removable for 360 degree access to the compaction zone. Designs requiring removal of the drive assembly, discharge head, or screw conveyor to gain access to the compaction zone will not be acceptable. The housing shall be provided with a drain connection at its lowest point and a clamped flexible PVC hose for drain water to be directed directly back into the tank. The plastic housing shall also be provided with a flush connection to allow periodic cleaning of the compaction zone.

E. Screen Drive
1. The basket mechanism and transport screw shall be driven by a shaft mounted geared motor. The motor shall have a minimum service factor of 1.0 equivalent to a AGMA Class 1 rating.
2. The motor shall be sized as necessary for reliable operations.
3. The motor shall be provided with thermostats to provide thermal overload protection in addition to current overload protection.
4. The gear reducer shall be bolted to a machined flange welded to the upper end of the auger tube.
5. The gear reducer shall be drive by a 3-phase, 60 Hz, 230/460 volt, Class 1 Div 2, group D inverter-duty, totally enclosed, fan-cooled continuous-duty motor.

2.8 GRIT SYSTEM

A. Grit Removal System
   1. The grit removal system shall include a horizonal transport screw that collects grit that settles in the grit chamber at the influent side of the tank. An inclined grit screw then removes this collected grit from the tank. Grit shall be discharged via the inclined grit screw to a stainless steel discharge chute which will direct dewatered grit to the bagger or dumpster.
   2. The inclined grit screw shall be installed at a 35 degree angle.
   3. The horizonal and the inclined grit conveyance screw shall have a minimum shaft diameter of 2.4”. The screw flights shall be a minimum of 0.2” thick.
   4. The horizontal and the inclined grit screws shall be supported by the drive at one end and along their length by slide bearings made of high-molecular RCH-1000 material. Grease lubricated bearings are not acceptable.
   5. The drive ends of the horizontal and inclined conveyance screw shaft tubes shall be machined and shrink-fitted with solid stainless steel stubs.

B. Grit Screw Drive
   1. The horizontal grit screw drive shall be equipped with a 3-phase, 60 Hertz, 230/460 volt, Class 1, Division 1, continuous-duty motor with leads to a conduit box for outdoor operation.
   2. The inclined grit screw drive shall be equipped with a 3-phase, 60 Hertz, 230/460 volt, Class 1, Division 1, continuous-duty motor with leads to a conduit box for outdoor operation.
   3. Motors shall be sized as necessary for reliable operations.
   4. Motors shall have a minimum service factor of 1.0 equivalent to a AGMA Class 1 rating.
   5. The motors shall be provided with thermostats to provide thermal overload protection in addition to current overload protection.

C. Grit Aeration:
   1. The grit chamber shall be equipped with an aeration system.
   2. The aeration system shall include an air header and air distributor pipes. The header shall be made of stainless steel and PVC pipes and fitting and/or flexible reinforced PVC hose. The distributor pipes shall be connected to the headed through flexible reinforced hoses. Every distributor pipe shall be provided with an operator-accessible brass ball valve for isolation and regulation of the air flow
   3. All pipe supports and hardware shall be stainless steel,
   4. A single stage side channel blower shall be furnished to provide a minimum air flow of 6.2 cfm at a pressure of 0.5 bar. The blower shall be coupled with a 460 VAC, 60 Hz, 3-phase motor.

2.9 OUTDOOR WEATHER PROTECTION

A. The screenings transport tube and inclined grit auger tube shall be furnished with thermal insulation made of foil-backed mineral wool.

B. The spray wash manifold and spray wash piping shall be furnished with electrical heat tracing and thermal insulation made of foil-backed mineral wool.

C. The heating and insulation system shall be protected with stainless steel protective covers which shall enclose the screenings transport tube, compaction and dewatering zone and all spray wash piping, ball valves and solenoid valves, and grit screw tube.

D. The outdoor weather protection system shall include self-regulating heat tracing, adjustable thermostat, insulation and a stainless steel protective jacket.

E. The heat tracing system shall be suitable for operation down to a minimum temperature of 0 deg F and shall be powered from the main control panel.

F. Where the wash water supply and electrical wiring conduit penetrate the stainless steel cover bulkhead adapters shall be provided.

G. All components requiring service or maintenance shall be easily accessible.

2.10 DISCHARGE CHUTES

A. Manufacturer shall provide discharge chutes to reach owner-supplied trash receptacles, configured as shown in the Drawings.

B. Discharge chutes shall be constructed of stainless steel and terminate 5.5 feet above finished floor.

C. Discharge chutes shall accommodate bagging units as specified herein.

2.11 BAGGER UNITS

A. For each package headworks, two (2) continuous manufacturer standard bagging systems shall be furnished, one for the screenings and one for the grit.

B. The bagging systems shall be designed to abate odors and to seal dewatered grit/screenings to prevent any direct operator contact.

C. The discharge bagging systems shall be attached to the respective discharge chutes with stainless steel flange adapters. The bag holder will be attached to the adapter.

D. The system shall come equipped with bags. Bags shall be non-porous, three-ply, co-extruded polyethylene with a minimum thickness of 1.8 mil and a minimum dart drop of 1.80 pounds.

2.12 ANCHOR BOLTS

A. Equipment manufacturer shall furnish all anchor bolts of ample size and strength required to securely anchor each item of equipment.

B. Anchor bolts shall be stainless steel and be wedge or epoxy type.

2.13 ACCESSORIES

A. Equipment Identification Plates:
   1. Provide a 16-gauge stainless steel identification plate securely mounted on the screen and on the local control station in a readily visible location.

B. Lifting Lugs: The equipment shall be provided with lifting lugs.

C. Pipe Supports: Manufacturer shall supply pipe supports for adequate support of the discharge tube.

D. Bagging System: Provide two (2) additional rolls of bags for each package headworks unit.

2.14 SPARE PARTS AND SPECIAL TOOLS

A. Two (2) spare parts package shall be provided, one (1) for each package system unit, which shall include Manufacturer-recommended spare parts and wear part replacements, which shall include at a minimum:
   1. One (1) solenoid valve rebuild kit of each applicable size
   2. One (1) set of cleaning brush replacements

B. For each package headworks system, all special tools required to service and maintain the equipment shall be provided.

C. Spare parts and special tools shall be individually boxed with the project name and part number clearly identified on each individual box.

2.15 CONTROL SYSTEM

A. The control system is described in detail in section 462113, SCREENING AND GRIT REMOVAL SYSTEM – GENERAL.

PART 3 - EXECUTION

3.1 INSTALLATION

A. Contractor shall install Manufacturer's equipment in accordance with Manufacturer's recommendations and Section 462113, SCREENING AND GRIT REMOVAL SYSTEM – GENERAL-WWTP, the Drawings and specifications.

3.2 FIELD ACCEPTANCE TESTS

A. In addition to requirements listed in Section 462113, SCREENING AND GRIT REMOVAL SYSTEM – GENERAL-WWTP, the following shall be tested:
   1. Screenings and grit shall be checked visually for proper dryness. Contractor or Owner at his option may perform a paint filter test to verify that screenings are dewatered adequately.
   2. Amperage draw shall be measured when grit is processed.
   3. Failure shall be tested by jamming the grit conveyor and screen auger.

B. A certified field test report shall be submitted to the Engineer. The report shall include all recorded field test data and results.

END OF SECTION

SECTION 462113.02 – DES: FINE SCREENING – WWTP

PART 1 - GENERAL

1.1 WORK INCLUDED

A. This section covers the work necessary to furnish and install, complete, four (4) tank mounted rotary drum perforated plate fine screens for removal of floating, particulate, and fibrous material from wastewater. Two (2) of the units will be installed at the Hospital WWTP and two (2) units will be installed at Hon-Dah WWTP.

B. See Section 462113, SCREENING AND GRIT REMOVAL SYSTEM – GENERAL-WWTP, for additional information.

1.2 SUBMITTALS

A. Submittals shall be made as required by section 462113, SCREENING AND GRIT REMOVAL SYSTEM – GENERAL-WWTP.

PART 2 - PRODUCTS

2.1 GENERAL

A. The fine screens shall be provided by the same Manufacturer of the coarse screen and grit removal package headwork units.

2.2 EQUIPMENT NUMBERS

A. The major pieces of equipment covered under this specification are:

Equipment Description	Hospital WWTP Equipment Numbers	Hon-Dah WWTP Equipment Numbers
Automatic Fine Screen 1	1130-FS-01	2130-FS-01
Automatic Fine Screen 2	1130-FS-02	2130-FS-02

2.3 MANUFACTURERS AND MODELS

A. Basis of Design: Huber Rotamat perforated plate screen RPPS 780/2 Tank Mounted

B. Equal: Saveco SAVI Flo-Drum Tank Mounted VSA 600/2-T

2.4 DESIGN REQUIREMENTS

A. The fine screening equipment shall meet the following design criteria:

Design Parameter	Hospital WWTP Design Value	Hon-Dah WWTP Design Value
Number of Screens	2	2
Annual Average Flow Rate (per screen)	125,666 gpd	104,100 gpd
Peak Hour Flow Rate (per screen)	376,999 gpd	312,300 gpd
Screen Type	Rotary drum perforated plate	
Screening Perforation Size	2 mm (1/4”)	
Minimum Screenings Capture Ratio	86 percent	
Screenings	Shall meet EPA Paint Filter Test per EPA method 9095	

B. Configuration Requirements: Shall be as specified in Section 462113, SCREENING AND GRIT REMOVAL SYSTEM – GENERAL-WWTP.

C. Performance Requirements:
   1. All equipment shall be capable of processing the influent wastewater which is combined raw, domestic wastewater and hospital wastewater. Prior to fine screening under typical operations, wastewater will, at a minimum, be processed with a 6 mm perforated plate screen.
   2. The screen shall be capable of processing spherical objects with a diameter 3-1/8” inches. Such objects shall be conveyed through the auger and discharged with screenings.

2.5 TANK

A. Each fine screen shall be supplied with a stainless steel tank. The screen is integral to the tank.

B. The tanks shall be completely enclosed have a minimum side wall thickness of 0.12” and be adequately stiffened to prevent distortion during transport, installation, and operation.

C. The tank shall be furnished with adjustable support legs. The legs shall be adjustable, at a minimum, by plus or minus ¾ inch, and be able to be anchored to the floor.

D. The tank shall have flanged inlet and outlet connections. Flanges shall be Class 150 ANSI/ASME B16.5 rated.

E. The tank shall have an overall maximum width of 3’-6” and overall maximum flange to flange length of 8’-0”.

F. The tank shall be provided with a hinged and gasketed cover. Cover shall be of an inset design to prevent leakage even in case of gasket failure. Opening and closing of the cover shall be supported by pressurized pneumatic cylinders made of stainless steel. The cover shall be provided with a keyed turn-lock. Tank and cover shall be spray water tight.

2.6 SPRAY WASH SYSTEM

A. The wash system shall be automatic and operated on an intermittent basis. Washing capabilities shall be provided, at a minimum, to the screen housing tank, the screen basket, a screenings wash zone, and a compaction zone.

B. The wash system shall be capable of utilizing treated effluent as water supply.

C. All wash systems shall be completely enclosed to prevent spray water, aerosols, and leakage contaminating the operating floor level.

D. The screen housing tank wash system shall be provided by a rotating spray nozzle so that all the interior surfaces of the screen tank housing can be covered by the spray water.

E. The compaction wash zone shall be provided by a flush system that ensures complete flushing of the compaction zone housing.

F. Each wash zone shall have a dedicated solenoid valve. A water manifold with one input connection shall be provided and connected to the solenoid valves. The common water connection shall be provided with a brass body Y-strainer. The strainer shall include a removable and washable stainless steel 20 mesh filter element.

G. From the common manifold, each wash zone shall be provided with minimum 1 inch diameter piping and flexible reinforced PVC hoses.

H. Each solenoid valve shall be minimum 1 inch diameter, brass body, 2-way, and designed for 120 VAC operation. Solenoid valves shall be normally closed and rated for up to 100 psig.

I. The solenoid valves shall be operated by the Manufacturer provided programmable logic controller (PLC). Individual manual operation of each solenoid shall be possible from the control panel. The cleaning characteristics of the screen and wash system shall be able to be adjusted via the PLC.

2.7 PERFORATED PLATE FINE SCREEN

A. General
   1. The screen shall be a rotary drum screen with perforated plate screen basket with perforation size as specified above. The screen shall have a completely enclosed integrated washer, compactor, conveyor, and include a bagging attachment.
   2. The screen shall utilize a single drive for screening, conveying, dewatering and compressing the screened material.
   3. Operation of the screen drive shall be automatically initiated at a preset high upstream water level.

B. Level Control
   1. The Manufacturer shall supply the required level sensing equipment for proper equipment operation. Electrical device interconnecting conduit and wiring shall be the responsibility of the installing contractor.
   2. Level control shall be manufacturer standard.
   3. Level control instrumentation shall be mounted to ensure proper operation.
   4. All mounting parts shall be stainless steel.
   5. Level control instrumentation shall be rated for Class 1, Division 1 explosion hazard location.

C. Screen Basket
1. The perforated screen basket shall have a cylindrical shape. The perforated plate shall be around the entire basket circumference. It shall be installed parallel to the wastewater flow direction.
2. The screen basket shall be provided with a bottom plate lying flat on the tank floor. The screen shall be provided with an upper support flange and a conical transition piece between the screen basket and auger tube.
3. The average perforation flow through velocity shall not exceed 3.3 feet per second under any flow condition. The screen shall minimize solid deposition within the flow stream.
4. The screen shall be designed to withstand maximum forces exerted during operation. All structural and functional members shall be sized to prevent deflection or vibration which could impair operation.
5. A seal plate shall be provided between the circular screen and the stainless steel tank. The seal plate shall be one-piece fabricated of stainless steel plate. The sealing plate shall be of sufficient height to prevent bypassing of flow around the screen at the maximum screen hydraulic capacity. A polyurethane seal, affixed to the stationary face baffle and folded to the inside periphery of the rotating drum (hydrostatic pressure of the water inside the drum shall aid in the seal), shall be provided to ensure that there will be no bypass of unwanted solids through the screen.
6. The screen basket shall rotate in one direction and pass through the topmost position were it is cleaned with a stainless steel high pressure spray bar and a stainless steel backed nylon brush with bristles that penetrate the depth of the perforated plate screen to ensure positive screenings removal.
7. The brush shall be designed to ensure cleaning of the spaces to the full depth of the perforated plate. The cleaning brush shall be mounted upon a stainless steel holding device which keeps the brush in constant contact with the basket and shall be adjustable to allow for brush wear.
8. Another stainless steel backed nylon brush shall be attached to the rotating basket and positioned to make contact with the screening trough to sweep material caught on the edges of the trough.

D. Screenings Conveyor and Screenings Wash Press
1. The conveyance screw shall have helicoid-shaped flights designed to remove solids from the screenings basket at a 35 or 45 degree angle.
2. The flights of the screw in the screen basket shall be provided with ¼-inch thick hardened stainless steel strip having the same thickness as the flights of the screw. The strip shall be welded to both sides of the flights, over the full length of the screen basket. The flights of the screw shall me machined to match the screen basket such that the face of the strip is parallel to the screen basket's inner surface.
3. The screw conveyor's tube diameter shall have a wall thickness of 0.1 inch (2.6 mm). Two (2) anti rotation bars shall be welded to the inside, or bolted from the outside, of the transport tube along its longitudinal axis for continuous and controlled screenings transport. The screenings screw conveyor shall not be in contact with the anti rotation bars during normal operation. Screens which utilize wear bars that require replacement as part of a normal maintenance program shall not be acceptable.

4. A flange shall be welded to the conical transition piece to support and allow for removal of the screen basket.
5. A gear box support flange shall be welded to the upper end of the auger tube for support and removal of the drive assembly. The flange thickness shall be a minimum of 0.46”.
6. A shafted stainless steel screw with helical flight shall be installed in the auger tube for consistent conveying, dewatering, and proper compaction of the screened material. A shafted screw design shall have a rigid structure to prevent screw flexing and shall distribute the drive load uniformly. The shaft shall have a minimum diameter of 3 ½ inch (89 mm) and shall have flights with a thickness of ¼ inch in the transport zone and a minimum thickness of 0.4 inch (10 mm) in the compaction zone. A shaft-less screw in the auger tube shall not be acceptable.
7. A replaceable auger wear strip shall be installed on the flight edge for screw and brush wear protection.
8. The upper and lower end of the screw conveyor shaft shall be fitted with a solid stub. The stub and the screw conveyor shaft shall be accurately machined and shrink-fitted with each other. The entire screw shall be balanced and machined to ensure perfect alignment, screw conveyors with bolted on stub shafts shall be unacceptable due to lack of improper alignment.
9. After all flanges are welded to the auger tube, the faces of the flanges shall be machined on a lathe such that they are exactly rectangular to the tube axis.
10. The lower end of the screenings conveyor shall be supported by a sealed, self-lubricated, slide bearing. This bearing shall not take any thrust load from the screw conveyor. Lower ball or roller bearings, or bearings requiring lubrication, shall not be acceptable.
11. The lower bearing shaft and arm shall be designed to minimize material wrapping around the shaft. A seal plate shall be furnished to mate between the stationary lower bearing support and the rotating arm to prevent material intrusion into the bearing seals.
12. A compaction zone shall be provided as an integral part of the screw conveyor and tube. The compaction zone shall be designed to form a plug of screenings material and to return water released from the screened material back to the tank through perforations that are machined into the screenings transport tube.
13. The compaction zone shall be provided with split glass fiber reinforced or stainless steel housing, furnished with gaskets and bolts, and shall be easily removable for 360 degree access to the compaction zone. Designs requiring removal of the drive assembly, discharge head, or screw conveyor to gain access to the compaction zone will not be acceptable. The housing shall be provided with a drain connection at its lowest point and a clamped flexible PVC hose for drain water to be directed directly back into the tank. The plastic housing shall also be provided with a flush connection to allow periodic cleaning of the compaction zone.

E. Screen Drive
1. The basket mechanism and transport screw shall be driven by a shaft mounted geared motor. The motor shall have a minimum service factor of 1.0 equivalent to a AGMA Class 1 rating.
2. The motor shall be sized as necessary for reliable operations.

3. The motor shall be provided with thermostats to provide thermal overload protection in addition to current overload protection.
4. The gear reducer shall be bolted to a machined flange welded to the upper end of the auger tube.
5. The gear reducer shall be drive by a 3-phase, 60 Hz, 230/460 volt, Class 1 Div 2, group D inverter-duty, totally enclosed, fan-cooled continuous-duty motor.

2.8 OUTDOOR WEATHER PROTECTION

A. The screenings transport tube shall be furnished with thermal insulation made of foil-backed mineral wool.

B. The spray wash manifold and spray wash piping shall be furnished with electrical heat tracing and thermal insulation made of foil-backed mineral wool.

C. The heating and insulation system shall be protected with stainless steel protective covers which shall enclose the screenings transport tube, compaction and dewatering zone and all spray wash piping, ball valves and solenoid valves, and grit screw tube.

D. The outdoor weather protection system shall include self-regulating heat tracing, adjustable thermostat, insulation and a stainless steel protective jacket.

E. The heat tracing system shall be suitable for operation down to a minimum temperature of 0 deg F and shall be powered from the main control panel.

F. Where the wash water supply and electrical wiring conduit penetrate the stainless steel cover bulkhead adapters shall be provided.

G. All components requiring service or maintenance shall be easily accessible.

2.9 DISCHARGE CHUTES

A. Manufacturer shall provide discharge chutes to reach owner-supplied trash receptacles, configured as shown in the Drawings.

B. Discharge chutes shall be constructed of stainless steel and terminate 5.5 feet above finished floor.

C. Discharge chutes shall accommodate bagging units as specified herein.

2.10 BAGGER UNITS

A. A manufacturer standard bagging unit shall be provided for each fine screen.

B. The bagging systems shall be designed to abate odors and to seal dewatered grit/screenings to prevent any direct operator contact.

C. The discharge bagging systems shall be attached to the respective discharge chutes with stainless steel flange adapters. The bag holder will be attached to the adapter.

D. The system shall come equipped with bags. Bags shall be non-porous, three-ply, co-extruded polyethylene with a minimum thickness of 1.8 mil and a minimum dart drop of 1.80 pounds.

2.11 ACCESSORIES

A. Pipe Supports: Manufacturer shall supply pipe supports for adequate support of the discharge tube and/or chutes.

B. Anchor Bolts: Unless otherwise specified, Contractor shall furnish all anchor bolts of ample size and strength required by the Manufacturer and these documents to securely anchor each item of equipment. Anchor bolts, hex nuts, and washers shall be AISI Type 316 stainless steel. Anchor bolts shall be wedge or epoxy type and be set by the Contractor.

2.12 SPARE PARTS AND SPECIAL TOOLS

A. One (1) spare parts packages shall be provided with each screen unit, for a total of four (4) spare parts packages. Each spare parts package shall include Manufacturer-recommended spare parts, including but not limited to the following:
   1. One (1) solenoid valve rebuild kit of each applicable size
   2. One (1) set of cleaning brush replacements
   3. One (1) additional rolls of bags compatible with bagging system.

B. All special tools required to service and maintain the equipment shall be provided for each pair of fine screens.

C. Spare parts and special tools shall be individually boxed with the project name and part number clearly identified on each individual box.

2.13 CONTROL SYSTEM

1. The control system is described in detail in section 462113, SCREENING AND GRIT REMOVAL SYSTEM – GENERAL-WWTP.

PART 3 - EXECUTION

1.01 INSTALLATION

A. Contractor shall install Manufacturer's equipment in accordance with Manufacturer's recommendation and Section 462113, SCREENING AND GRIT REMOVAL SYSTEM – GENERAL-WWTP, the Drawings, and Specifications.

3.1 FIELD ACCEPTANCE TESTING

A. In addition to requirements listed in Section 462113, SCREENING AND GRIT REMOVAL SYSTEM – GENERAL-WWTP, the following shall be tested:
   1. Screenings shall be checked visually for proper dryness. Contractor or Owner at his option may perform a paint filter test to verify that screenings are dewatered adequately.
   2. Failure shall be tested by jamming the screen auger.

B. A certified field test report shall be submitted to the Engineer. The report shall include all recorded field test data and results.

END OF SECTION

SECTION 462113.03 – DES: MANUAL BAR SCREEN – WWTP

PART 1 - GENERAL

1.1 WORK INCLUDED

A. This section covers the work necessary to furnish and install, complete, two (2) manual bar screens to function as a bypass for raw wastewater screening. One (1) unit will be installed at the Hospital WWTP and one (1) until will be installed at Hon-Dah WWTP.

B. See Section 462113, SCREENING AND GRIT REMOVAL SYSTEM – GENERAL-WWTP, for additional information.

1.2 SUBMITTALS

A. Submittals shall be made as required by section 462113, SCREENING AND GRIT REMOVAL SYSTEM – GENERAL-WWTP.

PART 2 - PRODUCTS

2.1 GENERAL

A. The equipment specified herein may be provided by the Contractor or the same Manufacturer that provides the fine screens and coarse screen.

2.2 EQUIPMENT NUMBERS

A. The major pieces of equipment covered under this specification are:

Equipment Description	Hospital WWTP Equipment Numbers	Hon-Dah WWTP Equipment Numbers
Manual Bar Screen	1130-CS-02	2130-CS-02

2.3 DESIGN REQUIREMENTS

A. The manual bar screening equipment shall meet the following design criteria:

Design Parameter	Hospital WWTP Design Value	Hon-Dah WWTP Design Value
Number of Screens	1	1
Screen Width	12 inches	12 inches
Screen Height	18 inches	18 inches
Bar Spacing	1 inch	

B. Configuration Requirements: Shall be as specified in Section 462113, SCREENING AND GRIT REMOVAL SYSTEM – GENERAL-WWTP.

C. Performance Requirements:
   1. All equipment shall be capable of processing the influent wastewater which is combined raw, domestic wastewater and hospital wastewater.

2.4 TANK

A. Each manual bar screen shall be supplied with a stainless steel tank. The screen is integral to the tank.

B. The tanks shall be completely enclosed have a minimum side wall thickness of 0.12” and be adequately stiffened to prevent distortion during transport, installation, and operation.

C. The tank shall have flanged inlet and outlet connections, sized as shown on the drawings. Flanges shall be Class 150 ANSI/ASME B16.5 rated.

D. The tank shall be provided with a hinged and gasketed cover. Cover shall be of an inset design to prevent leakage even in case of gasket failure. Opening and closing of the cover shall be supported by pressurized pneumatic cylinders made of stainless steel. The cover shall be provided with a keyed turn-lock. Tank and cover shall be spray water tight.

2.5 BAR SCREEN

A. Manual bar screen shall be fabricated as shown on the Drawings. Place front face of racks in true plane.

B. Weld spacer bars between rack bars continuously at contact lines with rack bars and support channels.

2.6 DISCHARGE CHUTE

A. A stainless discharge chute shall be integral to the side of the tank to allow for screenings to be easily disposed of into trash receptable (provided by owner), as shown in the Drawings.

2.7 ANCHOR BOLTS

A. Anchor Bolts: Unless otherwise specified, Contractor shall furnish all anchor bolts of ample size and strength required by the Manufacturer and these documents to securely anchor each item of equipment. Anchor bolts, hex nuts, and washers shall be AISI Type 316 stainless steel. Anchor bolts shall be wedge or epoxy type and be set by the Contractor.

PART 3 - EXECUTION

1.01 INSTALLATION

A. Contractor shall install Manufacturer’s equipment in accordance with Manufacturer’s recommendations, if applicable, and Section 462113, SCREENING AND GRIT REMOVAL SYSTEM – GENERAL-WWTP, the Drawings, and Specifications.

3.1 FIELD ACCEPTANCE TESTING

A. In addition to requirements listed in Section 462113, SCREENING AND GRIT REMOVAL SYSTEM – GENERAL-WWTP, the following shall be tested:
   1. Water level operating as expected during normal flows.

B. A certified field test report shall be submitted to the Engineer. The report shall include all recorded field test data and results.

END OF SECTION

SECTION 465035 – WASTEWATER ULTRAVIOLET DISINFECTION SYSTEM – GENERAL – WWTP

PART 1 - GENERAL

1.1 WORK INCLUDED

A. This section covers the work necessary to furnish and install, complete and ready for operation, the ultraviolet (UV) disinfection systems for the Hospital WWTP and the Hon-Dah WWTP. Each system shall be complete with an automatic mechanical or mechanical/chemical cleaning system, variable output electronic ballasts, and all necessary components needed for a complete and functional system. The manufacturer or supplier shall provide all equipment and other accessories, complete.

B. Related Sections:
   1. The work of the following sections includes Detail Equipment Specifications (DES). The screening system Manufacturer is responsible for coordination of all items included in these specifications unless expressly noted otherwise.
      a. Section 465035.01, DES: HOSPITAL WWTP ULTRAVIOLET DISINFECTION SYSTEM – WWTP
      b. Section 465035.02, DES: HON-DAH WASTEWATER ULTRAVIOLET DISINFECTION SYSTEM – WWTP
      c. Division 40, PROCESS INTERCONNECTIONS-WWTP
      d. Division 26, ELECTRICAL-WWTP
      e. P&ID Drawings

1.2 GENERAL

A. The Contractor and/or manufacturer shall provide all required miscellaneous equipment and materials, as shown on the Drawings and in accordance with these Specifications. The Contractor and/or manufacturer shall furnish all equipment items, whether specified or not, as necessary to provide complete, operable UV disinfection facilities.

B. All equipment shall be compliant with Federal Acquisition Register the clause 52.225-11, Buy American-Construction Materials under Trade Agreements (Nov 2023) and provision 52.225-12, Notice of Buy American Requirement-Construction Materials under Trade Agreements (May 2014).

C. See the GENERAL CONDITIONS and Division 01, GENERAL REQUIREMENTS, which contain information and requirements that apply to the work specified herein and are mandatory for this project.

1.3 QUALITY ASSURANCE AND SAFETY REQUIREMENTS

A. The UV disinfection system manufacturer shall be experienced in the design, manufacture, installation, and operation of UV disinfection systems, as demonstrated by a minimum of five years in the UV disinfection business and a minimum of 10 systems installed at wastewater treatment facilities of comparable size to the ones specified herein.

B. All components of the UV system provided under this Contract shall be constructed with due regard to safety of operation, accessibility, and durability of parts, and shall comply with all OSHA, State, and local safety regulations.

C. Like items of equipment provided hereunder shall be the end product of the same

manufacturer in order to achieve standardization of operation, maintenance, spare parts and manufacturer's services; and shall include all necessary appurtenances for a complete and working system. The equipment shall be the product of a manufacturer regularly engaged in the production of equipment for the specified use. The manufacturer shall have the sole responsibility for the proper functioning and coordination of the equipment as furnished.

1.4 SUBMITTALS

A. Submittals shall be made as required in Section 013300, SUBMITTAL PROCEDURES in Division 01, GENERAL REQUIREMENTS. In addition, the information summarized below shall be provided:

1. Complete descriptive information for the UV System to be furnished including design criteria, sizing information, type of equipment, number of lamps, modules and trains, and materials of constructions for all components of the UV system.
2. Shop drawings showing all details of UV System construction including UV reactors, power supply cabinets, on-line mechanical cleaning system, UV intensity sensors, UV transmittance monitors, and related equipment. Minimum clearances for inspection and maintenance of major equipment components shall be shown on the shop drawings.
3. Detailed wiring and control schematics and layout drawings, including wires, and a description of the operation of all panels.
4. All interconnections and interface requirements, dimensions and locations of all major elements of the UV Disinfection System. The maximum separation distances of electrical ballast panels from the UV reactors shall be provided in the submittal.
5. Complete specifications and parts list for the UV System including materials of construction, painting systems and standards certifications.
6. List of spare parts, special tools, and supplies furnished with the UV System. The list of special tools shall include those required for checking, testing, parts replacement, and maintenance of UV System components that have been specially design and not routinely carried by maintenance mechanics.
7. List of tools furnished with the UV System.
8. Requirements for protection of the equipment during storage prior to installation and after installation prior to startup.
9. Requirements for routine maintenance prior to startup, and for initial startup and operation prior to acceptance by the Owner.
10. Submit an installation instruction package (IIP) for all equipment and instrumentation furnished for installation by the Contractor.
11. A summary report presenting the results of a third-party validation test of a UV reactor in accordance with the latest NWRI requirements.

1.5 MANUFACTURERS' SERVICES

A. A qualified manufacturer's representative for the equipment specified herein shall be present at the jobsite and/or classroom designated by the Owner for the minimum person-days listed, travel time excluded. For each WWTP, the following services shall be provided in a minimum of two trips:

1. Two person-days for installation assistance, inspection, and certification of the installation.
2. One person-day for start-up, commissioning, and functional and performance

testing.
3. One-half person-day for pre-startup classroom or jobsite training.
4. A minimum of two round trips will be required.

B. A qualified manufacturer's representative shall be one who has had at least two years of experience in the installation of the equipment specified herein and shall have previous experience at a minimum of five projects that have included a similar UV system.

C. At completion of the installation, the manufacturer's representative shall issue a certificate, as specified in Part 3, EXECUTION of this Specification, showing that the installation is as specified and is acceptable to the manufacturer.

D. Startup services and training of Owner's personnel shall be at such times as requested by the Owner.

E. The manufacturer shall direct his services to system and equipment operation, maintenance, troubleshooting, and all equipment and system related areas other than wastewater treatment process.

F. Also see Section 019113, GENERAL COMMISSIONING REQUIREMENTS.

1.6 OPERATION AND MAINTENANCE MANUALS

A. Operation and Maintenance (O&M) Manuals and Equipment Maintenance Summary Sheets for the equipment specified herein shall be furnished as specified in Section 017700, CLOSEOUT PROCEDURES.

B. The O&M manuals shall contain, at a minimum, full descriptions of all equipment specified herein, electrical data, spare parts lists, and detailed instructions for all operation and maintenance tasks to be performed by the operator.

C. A spare manual shall be shipped with the equipment in order to allow for proper installation and operation of the equipment prior to the release of all final installation, operation, and maintenance manuals.

1.7 WARRANTY

A. Equipment: The equipment furnished under this section (excluding UV lamps) shall be free of defects in materials and workmanship, including damages that may be incurred during shipping and shall be 100 percent warranted for a period of one year from start-up or 18 months after shipment, whichever occurs first.

B. UV Lamps: The UV lamps shall be 100 percent warranted up to 9,000 hours of operation regardless of power output. After the 100 percent warranty period, lamp warranty shall be prorated up to 12,000 hours of operation. On/Off cycles are limited to three per day.

C. Ballasts: Ballasts shall be 100 percent warranted for at least 5 years, prorated after one year, regardless of power output or operating hours.

D. A 12-month manufacturer's representative maintenance visit to assist the Owner with lamp cleaning system and other preventative maintenance, and inspection of units, shall be included.

PART 2 - PRODUCTS

2.1 GENERAL

A. The basis of design for the UV disinfection systems for the two WWTPs are different systems and are specified in the detailed equipment specifications.

B. Both UV disinfection systems shall be supplied by the same manufacturer.

C. Electrical materials and workmanship required to complete the work under this section shall also conform to the applicable requirements of Division 26, ELECTRICAL.

D. The control system(s) required to complete the work in this section shall conform to the applicable requirements of the instrumentation and control sections in Division 40, PROCESS INTERCONNECTIONS and Division 26, ELECTRICAL.

E. Identification Plates: Mount 16-gauge stainless steel plates in readily visible locations on each separate component of equipment. Die-stamp equipment identification number each plate, as listed herein or as shown, with ¼-inch characters.

F. Lifting Lugs: Provide on equipment and equipment components over 100 pounds.

2.2 PERFORMANCE REQUIREMENTS APPLICABLE TO BOTH SYSTEMS

A. Effluent from the WWTP will need to meet water quality standards of the White Mountain Apache Tribe (surface water discharge) and Class A/A+ effluent defined by the State of Arizona, AAC Section R18-11-304 (reclaimed water).
   1. The UV system shall be capable of achieving the following effluent requirements during the disinfection seasons and flows shown:
      a. Non-detectable fecal coliform in four of seven daily samples
      b. Single sample maximum: 23 / 100 mL

B. The UV systems shall be able to meet the required fecal coliform limits up to maximum day flows with one train out of service.

C. Full treatment must be provided to the levels shown above at all flows up to maximum day flow.

D. The UV disinfection systems must be able to hydraulically pass peak hour flows.

2.3 PROCESS CONTROL NARRATIVE

A. The following overall process control narrative is applicable to both systems. Both systems consist of two redundant trains, each with two UV reactors. Both UV reactors of each train are needed for reliable treatment at the design flow for each train.

B. Overall UV System operation will be controlled from the Plant Control System (PCS). Individual UV reactors will be controlled by the manufacturer-supplied local control panels specified in the Detailed Equipment Specifications.

C. Normal Operation:
   1. A duty train is selected at the PCS main computer. The PCS opens and closes applicable actuated isolation valves and calls the two duty reactors to run. The train will continue to operate until a different duty train is selected at the PCS.
      a. If a single lamp in one of the two duty reactors fails, an alarm is sent, but the duty train will keep operating.
      b. If two or more lamps or an entire reactor fail, the PCS will switch the duty train.

1) First the PCS will call the second train and allow it to warm up for the manufacturer-recommended time period.
2) The PCS will operate the actuated isolation valves as needed to allow flow through the standby train and stop flow through the duty train.
3) The PCS will assign the new duty and standby train status.

D. For the Hon-Dah WWTP only, the PCS shall be programmed to allow selection of a single UV reactor per train as the duty unit, if influent flows are 26,000 gallons per day or less. A second reactor shall be called to run when influent flows remain above 26,100 gallons per day for more than 2 hours.

PART 3 - EXECUTION

3.1 PREPARATION FOR SHIPMENT, SHIPMENT, AND PROTECTION

A. Equipment shall be prepared and protected for shipment and shipped in accordance with the requirements of Section 016000, PRODUCT REQUIREMENTS of Division 01, GENERAL REQUIREMENTS. In addition, the following shall be done:
1. After testing and before dismantling for shipment, all wiring and mechanical connections shall be matchmarked or tagged to ensure proper field assembly.
2. The Contractor shall make arrangements for extra protection until final installation.

3.2 INSTALLATION

A. Equipment shall be installed in accordance with the Drawings and manufacturer’s written instructions.

3.3 TESTING

A. See detail equipment specifications for testing requirements.

3.4 MANUFACTURER'S CERTIFICATE

A. Provide Manufacturer's certificate of proper installation in accordance with Section 019113 GENERAL COMMISSIONING REQUIREMENTS in Division 01, GENERAL REQUIREMENTS.

END OF SECTION

SECTION 465035.01 – DES: HOSPITAL WWTP ULTRAVIOLET DISINFECTION SYSTEM – WWTP

PART 1 - GENERAL

1.1 EQUIPMENT NUMBERS

A. The equipment covered under this specification is for the Hospital WWTP and includes:

Equipment Description	Hospital WWTP Equipment Numbers
UV Reactor 1	1910-UV-01
UV Reactor 2	1910-UV-02
UV Reactor 3	1910-UV-03
UV Reactor 4	1910-UV-04
UV Disinfection Control Panel 1	LCP-1910-01
UV Disinfection Control Panel 1	LCP-1910-02
UV Disinfection Control Panel 1	LCP-1910-03
UV Disinfection Control Panel 1	LCP-1910-04

PART 2 - PRODUCTS

2.1 MANUFACTURERS

A. “Basis-of-Design Products:” The first named Manufacturer’s system was used as the Basis of Design for this Specification and the Drawings. The structures and facilities appurtenant to the pumps shall meet the basis of design in quality and capacity. Equipment furnished by all qualified, interested Manufacturers will be considered, provided the necessary structural, electrical, and mechanical changes are submitted in conformance with the requirements of the GENERAL CONDITIONS and DIVISION 1, GENERAL REQUIREMENTS. The Contractor shall be responsible for all design changes associated with other Manufacturers’ equipment and shall bear all costs for necessary changes for a complete and satisfactory installation.

2.2 EQUIPMENT MANUFACTURERS

A. Equipment shall be manufactured by:
1. Nuvonic – Model ProLine PQ WW IL 400
2. Enaqua
3. Or approved equal.

2.3 SERVICE CONDITIONS AND PERFORMANCE REQUIREMENTS

A. The process fluid to be disinfected is treated and filtered wastewater from a membrane bioreactor (MBR) treatment process.

B. Design flows are as follows:

Parameter	Value
Average Day Flow	125,700 gpd
Max Month Flow	188,500 gpd
Max Day Flow	251,330 gpd

Peak Hour Flow	377,000 gpd

C. Quality of the filtered effluent is expected to be as follows:

Parameter	Value
BOD (Monthly Average)	<5 mg/L
BOD (Maximum Day)	<10 mg/L
TSS (Monthly Average)	<5 mg/L
TSS (Maximum Day)	<10 mg/L
Turbidity	< 5 NTU
UV Transmittance	> 65%
Temperature	10°C – 25°C

D. Minimum Validated RED (MS2) UV Dose at design Flow shall be 80 mJ/cm2. Basis for evaluating the dose delivered by the UV system shall be the Manufacturer's 3rd party bioassay NWRI validation testing.

2.4 EQUIPMENT

A. UV Reactor

1. The UV system shall consist of four (4) UV reactors with two (2) duty UV reactors in series and one redundant train of two (2) UV reactors in series. Each reactor train shall be capable of disinfecting up to 261 gpm of wastewater of characteristics described in section 2.03. Open channel systems shall not be considered.
2. The reactors shall have a maximum laying length of 18.3 inches and width of 30.7 inches. Each reactor train shall have isolation valves installed upstream and downstream of the UV system.
3. The UV reactor shall be designed to handle a maximum operating pressure of 150 psig, and shall be factory hydrostatically tested to 1.5 times the rated operational pressure prior to shipment.
4. The disinfection reactor shall be the following model: ProLine PQ WW IL 400
   Model: 400
   Lamps: 4
   Lamp type: MP
   I/O flange: 6" ANSI 150 lb
5. The reactors shall be constructed of 316 SS. All wetted parts shall be stainless steel, high purity quartz, Teflon, EPDM and/or Viton. The reactors shall be provided pre-wired and only require field connections from the power/control module(s) to the reactor
6. UV lamp orientation shall be horizontal and perpendicular to the flow. Lamps shall be protected from contact with the water by high purity quartz sleeves. Lamps shall be removable from either end of the reactor without draining the unit.
7. The reactors shall be designed in such a way that when properly installed and operated there is no possibility of direct operator exposure to UV light from the UV lamps.
8. Piping shall be designed so that the reactor will be full of water at all times during operation.

B. UV Lamps
   1. Only medium pressure high intensity ultraviolet lamps shall be provided for disinfection. Maximum power consumption per lamp, including the ballast, shall be:
      a. 2.75 kW for B2520E+ lamps
   2. The lamps shall be operated by variable output electronic ballasts.
   3. Germicidal UV output from the lamps shall not be affected by temperature.

C. UV Quartz Sleeves
   1. The UV quartz sleeve shall be manufactured from Type 200 quartz, the same type used during the 3rd party testing of unit
   2. Quartz sleeves shall be open at both ends and sealed by means of an o-ring and Type 316 stainless steel compression fitting

D. UV Intensity Sensor
   1. One lamp in each reactor shall be equipped with a UV sensor, which measures the UV intensity of that lamp, providing continuous performance verification over the above specified water transmission range.
   2. The sensors shall measure only the germicidal portion of the light emitted by the UV lamps as measured from 200 nm and 290 nm.
   3. The sensor shall be removable without draining the reactor (dry connection)
   4. The sensor shall be unaffected by static, electromagnetic fields, or short wave radio emissions that comply with current FCC regulations.
   5. The sensors shall produce a 4-20 ma signal, which shall be sent to the control module.

E. Cleaning Mechanism
   1. For periodic cleaning of the quartz sleeves and UV monitor probe, the reactor shall be fitted with an automatic/mechanical cleaning mechanism, which shall consist of a SS yoke and Teflon bosses. Each boss shall hold one EPDM molded wiper ring, which fits over the quartz sleeve. Wiper rings shall be replaceable.
   2. The cleaning mechanism is electrical/mechanical and shall be operated by means of a two-pole bi-directional capacitor driven motor and an acme lead screw. Limit switches shall be provided at the ends of the reactor to signal the control system to stop the motor when it reaches the end of the reactor. No pneumatic cleaning mechanisms shall be acceptable.
   3. The cleaning system shall be fully operational while still providing disinfection
   4. The cleaning cycle shall be field adjustable. The cleaning cycle shall be activated from the control system or manually at the operator interface.
   5. The cleaning system shall allow for a field upgrade to an online chemical assisted system for future water quality changes with minimal changes.

F. Temperature Sensor
   1. A temperature sensor shall be fitted to the reactor for protection against heat buildup under no or low flow conditions. UV system will shut down and alarm in event of heat buildup in the reactor.

G. Access Hatch
   1. A circular access hatch shall be provided on top of the reactor to allow easy, simple access for visual lamp/sleeve inspection and/or removal of foreign debris from the reactor without removing the lamps or quartz sleeves.

2.5 ELECTRICAL/INSTRUMENTATION AND CONTROLS

A. General
1. For each IL 400, one power/control cabinet shall be provided. Cabinets shall conform to NEMA 12 (IP54), suitable for indoor installation in an environmentally controlled room with a temperature range of 41 to 95◦F and an ambient humidity less than 85 %.
2. Cabinets shall be carbon painted steel (RAL7035) with forced fan cooling. The cabinets shall be wall mounted. The cabinet shall be 55.12” H x 39.4”W x 11.85” D.
3. The door of each cabinet shall be electrically interlocked so that the module is de-energized when the door is opened.
4. All wiring within the cabinets shall be harnessed or enclosed in wire channel.
5. Incoming circuits shall be protected by circuit breakers. Recommended customer breaker size is >32 A.
6. Ballasts shall be of the electronic type designed for operation of medium pressure high intensity lamps. Ballast power shall be variable down to at least 35% of lamp full power.
7. The cabinets shall be located a maximum of 100 ft from UV chamber.

B. Power/Control Cabinet
1. Each UV reactor shall be provided with an Allen Bradley Micro 850 PLC and monitoring system mounted in a single combined power/control cabinet.
2. A separate HMI (human-machine interface) shall be contained in the control cabinet, providing a graphic interface for monitoring and controlling operation of the UV reactors. The HMI shall be a 7” AB PanelView with color touch screen showing all system operational data and event log.
3. Each UV reactor shall be equipped with a power/control cabinet. This system collects all the data from individual UV lamps, UV intensity sensors and other sensors in the system. The data is displayed via the HMI and sent remotely to the plant control system via Industrial Ethernet. The local display panel shows the following data:
   a. Stream status: Available, Warming, Flow Enable, Running, Cooling, Tripped.
   b. UV dose.
   c. UV intensity.
   d. UV transmittance.
   e. UV reactor (chamber) temperature
   f. Selection and display of Local/Remote mode.
   g. On/off status of individual lamps.
   h. Error status of lamps and sensors.
   i. Lamp current and power.
   j. Stream alarms including Low Dose and ‘out of range’ alarms.
   k. Number of operating hours for each individual lamp.
   l. UV system control panel(s) power failure.
4. The AB 850 PLC shall communicate to the HMI via an Ethernet switch that also provides connection for SCADA via Industrial Ethernet and shall be furnished in each individual AB 850 control panel.
5. Direct communication to the UV system shall be continuous (24 hours per day, 7 days per week).

6. The control cabinet shall have the required analogue and digital input/output modules to control the UV reactor excluding valve control.
7. The controller shall have the ability to flow pace and adjust the power level of the lamps automatically based on programmed data and external inputs.

C. Monitoring and SCADA Interfacing
1. Run commands for the UV reactors shall be communicated to the UV system control panels over an Ethernet connection via the Ethernet/IP protocol. Upon receiving a system start command from the plant control system, the UV reactors shall return a signal indicating that the system is ready to receive flow (Flow Enable). The start/stop signals can be sent via hardwired volt-free contacts (VFCs) where preferred.
2. Networking equipment associated with the UV control system shall be configured with IP addresses as directed by the engineer/owner.
3. The UV reactor shall be capable of providing basic remote monitoring and or control via the plant control system. The following signals shall be made available to the plant's main SCADA system over an Industrial Ethernet connection via either Industrial Ethernet (direct reading of AB tags) or Modbus TCP/IP:
   a. UV dose.
   b. UV intensity.
   c. UV transmittance.
   d. Reactor (chamber) temperature.
   e. Lamp current.
   f. Stream status (Available, Warming, Flow Enable, Running, Cooling, Tripped).
   g. Low dose alarm
   h. Remote/Local status of individual UV reactor.
   i. On/Off status of individual lamps.
   j. Error status of lamps and sensors.
   k. Number of operating hours for each individual lamp.
   l. UV reactor (chamber) temperature alarm.
   m. Lamp out alarm.
   n. Lamp lifetime exceeded alarm.
   o. Overtemperature alarm.
   p. Lamp power failure alarm.
   q. UV system control panel power failure alarm.
   r. UV Dose – 4-20 mA output (UV intensity)
   s. Flow Rate – 4-20 mA input (from SCADA or others)
   t. Temperature – 4-20 mA input (from UV supplied temp sensor)

2.6 SPARE PARTS

A. The following spare parts shall be supplied with the equipment (no less than enough spares for one chamber).
   4 Lamps
   4 Quartz sleeves
   8 O-ring seals
   4 Wiper rings
   1 Operator Kit (includes: lamp tester, sleeve removal tool)

PART 3 - EXECUTION

3.1 TESTING

A. Prior to startup, the Manufacturer shall inspect the installed UV disinfection system for proper alignment, correct operation, proper connection, and satisfactory function of all components.

B. After startup and as part of the equipment certification process, the Owner shall submit to the Manufacturer one month of collected data as indicated below.
   1. Monthly operator's reports for 30 days following start-up.
   2. Daily values for:
      a. Plant flow (at time sample was collected)
      b. Number of units in operation
      c. Power level
      d. Time sample was collected
      e. Transmittance
      f. Influent Fecal Coliforms
      g. Effluent Fecal Coliforms
      h. Total Suspended Solids
      i. Dose
      j. Sample collected by

C. Laboratory Tests
   1. All laboratory tests necessary to confirm the Guaranteed Performance Requirements testing for the UV Disinfection System shall be performed in accordance with the applicable portions of the most recent edition of Standard Methods.

END OF SECTION

SECTION 465035.02 – DES: HON-DAH WASTEWATER ULTRAVIOLET DISINFECTION SYSTEM – WWTP

PART 1 - GENERAL

1.1 EQUIPMENT NUMBERS

A. The equipment covered under this specification is for the Hon-Dah WWTP and includes:

Equipment Description	Hon-Dah WWTP Equipment Numbers
UV Reactor 1	2910-UV-01
UV Reactor 2	2910-UV-02
UV Reactor 3	2910-UV-03
UV Reactor 4	2910-UV-04
UV Disinfection Control Panel 1	LCP-2910-01
UV Disinfection Control Panel 1	LCP-2910-02
UV Disinfection Control Panel 1	LCP-2910-03
UV Disinfection Control Panel 1	LCP-2910-04

PART 2 - PRODUCTS

2.1 MANUFACTURERS

A. “Basis-of-Design Products:” The first named Manufacturer’s system was used as the Basis of Design for this Specification and the Drawings. The structures and facilities appurtenant to the pumps shall meet the basis of design in quality and capacity. Equipment furnished by all qualified, interested Manufacturers will be considered, provided the necessary structural, electrical, and mechanical changes are submitted in conformance with the requirements of the GENERAL CONDITIONS and DIVISION 1, GENERAL REQUIREMENTS. The Contractor shall be responsible for all design changes associated with other Manufacturers’ equipment and shall bear all costs for necessary changes for a complete and satisfactory installation.

2.2 EQUIPMENT MANUFACTURERS

A. Equipment shall be manufactured by:
   1. Nuvonic – Model ProLine PQ WW IL 400
   2. Enaqua
   3. Or approved equal.

2.3 SERVICE CONDITIONS AND PERFORMANCE REQUIREMENTS

A. The process fluid to be disinfected is treated and filtered wastewater from a membrane bioreactor (MBR) treatment process.

B. Design flows are as follows:

Parameter	Value
Startup Low Flow	25,000 gpd
Average Day Flow	104,100 gpd
Max Month Flow	156,150 gpd
Max Day Flow	208,200 gpd

Peak Hour Flow	312,300 gpd

C. Quality of the filtered effluent is expected to be as follows:

Parameter	Value
BOD (Monthly Average)	<5 mg/L
BOD (Maximum Day)	<10 mg/L
TSS (Monthly Average)	<5 mg/L
TSS (Maximum Day)	<10 mg/L
Turbidity	< 5 NTU
UV Transmittance	> 65%
Temperature	10°C – 25°C

D. Minimum Validated RED (MS2) UV Dose at design Flow shall be 80 mJ/cm2. Basis for evaluating the dose delivered by the UV system shall be the Manufacturer's 3rd party bioassay NWRI validation testing.

2.4 EQUIPMENT

A. UV Reactor

1. The UV system shall consist of four (4) UV reactors with two (2) duty UV reactors in series and one redundant train of two (2) UV reactors in series. The reactor(s) shall be capable of disinfecting up to 110 gpm of water of characteristics described in section 2.03.
2. The reactor(s) shall have a maximum laying length of 67.3 inches (excluding wiper system).
3. Each reactor shall have isolation valves (supplied by others) installed upstream and downstream of the UV system.
4. The UV reactor shall be designed to handle a maximum operating pressure of 145 psig, and shall be factory hydrostatically tested to 1.5 times the rated operational pressure prior to shipment.
5. The disinfection reactor(s) shall be the following model: ProLine PQ WW AL
   Model: 100
   Lamps: 4
   Lamp type: LPHO
   I/O flange: 6" ANSI 150 lb
6. The reactor(s) shall be constructed of 316 SS. All wetted parts shall be stainless steel, high purity quartz, Teflon, and/or EPDM. The reactor(s) shall be provided pre-wired and only require field connections from the power/control module to the reactor.
7. UV lamp orientation shall be horizontal and parallel to the flow. The lamp shall be protected from contact with the water by a high purity quartz sleeve. The lamp shall be removable from the reactor without draining the unit.
8. The reactor(s) shall be designed with a tangentially aligned riser to create mixing and in such a way that when properly installed and operated there is no possibility of direct operator exposure to UV light from the UV lamps.
9. Piping shall be designed so that the reactor will be full of water at all times during operation.

10. The reactor shall be provided with maintenance support arms with handles to allow for ease of maintenance. These support arms shall include a Teflon spacer to center the rod and be contained within a protective tube to prevent pinch points during operation. Systems that require a hoist or additional equipment to provide internal reactor maintenance shall not be permitted.

B. UV Lamps
1. Only amalgam low pressure high intensity ultraviolet lamps shall be provided for disinfection.
2. Lamp connection shall not allow operator to remove lamp and connector while power cable is still attached to lamp connector. This is to prevent inadvertent UV exposure to operator.
3. In the case of a lamp sleeve failure, lamp connector shall prevent operator from removing lamp and connector while UV vessel is still under pressure. This will prevent broken lamp sleeve from becoming a projectile and injuring the operator.

C. UV Quartz Sleeve
1. The UV quartz sleeve shall be manufactured from Type 214 quartz, the same type used during the 3rd party testing of unit
2. Quartz sleeves shall be doomed at one of the chamber and sealed at the other end by means of an o-ring and Type 316 stainless steel compression fitting

D. UV Intensity Sensor
1. Each reactor shall be equipped with a UV sensor which measures the UV intensity of that lamp, providing continuous performance verification over the above specified water transmission range.
2. The sensor shall measure only the germicidal portion of the light emitted by the UV lamps as measured from 200 nm and 290 nm.
3. The sensor shall be removable without draining the reactor (dry connection)
4. The sensor shall be unaffected by static, electromagnetic fields, or short wave radio emissions that comply with current FCC regulations.
5. The sensor shall produce a 4-20 ma signal, which shall be sent to the control module.

E. Cleaning Mechanism
1. For periodic cleaning of the quartz sleeves and UV monitor probe, the reactor shall be fitted with an automatic/mechanical cleaning mechanism, which shall consist of a SS yoke and Teflon bosses. Each boss shall hold one EPDM molded wiper ring, which fits over the quartz sleeve. Wiper rings shall be replaceable.
2. The cleaning mechanism is electrical/mechanical and shall be operated by means of a two-pole bi-directional capacitor driven motor and an acme lead screw. Limit switches shall be provided at the ends of the reactor to signal the control system to stop the motor when it reaches the end of the reactor. No pneumatic cleaning mechanisms shall be acceptable.
3. The cleaning system shall be fully operational while still providing disinfection
4. The cleaning cycle shall be field adjustable. The cleaning cycle shall be activated from the control system or manually at the operator interface.

2.5 ELECTRICAL/INSTRUMENTATION AND CONTROLS

A. General
1. Power distribution and control for each UV reactor shall be through a single

combined power/control cabinet. The cabinet shall conform to NEMA 12, suitable for indoor installation in an environmentally controlled room with ambient temperature between 41 to 104 deg F with relative humidity less than 85%.

2. The cabinet shall be fan cooled and shall include louver covers with replaceable inlet filters. The cabinet shall be constructed of painted steel. The cabinet shall be wall mounted with dimensions of 39.4"H x 31.5"W x 11.8"D.
3. The cabinet shall be located at a maximum distance of 50 ft from the reactor.
4. All wiring within the cabinets shall be harnessed or enclosed in wire channel.
5. Incoming circuits shall be protected by circuit breakers.
6. Ballasts shall be of the electronic type designed for operation of low pressure high output lamps. Ballast power shall be variable down to at least 50% of lamp full power.

B. Power Requirements
1. 480/277 (wye), 3L+N, 60 Hz
2. Maximum Connected Load: 2.4 kW @ 100% output

C. Power/Control Cabinet
1. Each UV reactor shall be provided with an Allen Bradley 850 Series controller and monitoring system mounted in a single control cabinet.
2. Each UV reactor shall be controlled independently. Control of multiple units shall be accomplished through SCADA by others.
3. The control cabinet shall contain a touch screen HMI mounted at eye level. This HMI shall be an Allen Bradley 7inch touch screen color display All information, warnings, and alarms shall be presented on the screen for ease of operation. The following information for each reactor will be available on the screen at a minimum:
   a. Lamp Power Level
   b. Mode
   c. Intensity (%)
   d. UV Dose (mJ/cm2)
   e. Flow Rate
   f. Operation hours
   g. Lamp hours
   h. Number of Wiper Cycles
4. The power/control system shall have the ability to operate the automatic cleaning mechanism.
5. The power/control panel shall have the ability to dose pace the reactor and module the lamp power levels based on flow rate, UV sensor signals and UVT (from UVT monitor).
6. The power/control panel shall also provide hours counter for each lamp
7. The power/control system shall provide circuit breaker protection for all incoming power circuits.

D. Monitoring and SCADA Interfacing
1. All status and alarm information available on the control HMI shall be available for remote monitoring.
2. The controller shall be provided with Ethernet capabilities for interfacing and monitoring. The following parameters shall be available (but not limited to) via Ethernet or hardwired signals:
   a. Remote UV On/Off

b. System Ready
c. UV Failure (UV Dose or Intensity)
d. Lamp Failure
e. Wiper Failure
f. Cabinet Temperature Overheating
g. Any Warning
h. Any Alarm
i. Remote Wipe
j. Remote set power level
k. UV Dose – 4-20 mA output (representing dose or UV intensity)
l. UV Intensity - 4-20 mA input (from AQX supplied UV sensor)
m. Flow Rate – 4-20 mA input (from SCADA or others)

2.6 SPARE PARTS

A. The following spare parts shall be supplied with the equipment (no less than enough spares for one chamber).
   4 UV Lamps
   4 Quartz sleeves
   4 O-ring seals
   4 Wiper ring
   1 Operator Kit

PART 3 - EXECUTION

3.1 TESTING

A. Prior to startup, the Manufacturer shall inspect the installed UV disinfection system for proper alignment, correct operation, proper connection, and satisfactory function of all components.

B. After startup and as part of the equipment certification process, the Owner shall submit to the Manufacturer one month of collected data as indicated below.
   1. Monthly operator's reports for 30 days following start-up.
   2. Daily values for:
      a. Plant flow (at time sample was collected)
      b. Number of units in operation
      c. Power level
      d. Time sample was collected
      e. Transmittance
      f. Influent Fecal Coliforms
      g. Effluent Fecal Coliforms
      h. Total Suspended Solids
      i. Dose
      j. Sample collected by

C. Laboratory Tests
   1. All laboratory tests necessary to confirm the Guaranteed Performance Requirements testing for the UV Disinfection System shall be performed in accordance with the applicable portions of the most recent edition of Standard Methods.

END OF SECTION

SECTION 465131 – AERATION EQUIPMENT – GENERAL – WWTP

PART 1 - GENERAL

1.1 WORK INCLUDED

A. This section covers the work necessary to furnish and install, complete, diffused aeration equipment, including dropleg piping, manifold and lateral piping, fine bubble and coarse bubble diffusers, and accessories at both the Hospital WWTP and the Hon-Dah WWTP.

B. Aeration equipment shall be provided for the equalization basins and the aerobic digesters as specified herein and in the Detail Equipment Specification (DESs)

C. The equipment shall be installed as shown on the Drawings, as recommended by the manufacturer, and in compliance with all OSHA, local, state, and federal codes and regulations.

D. Related Sections:
   1. Section 465131.01, FINE BUBBLE AERATION EQUIPMENT-WWTP
   2. Section 465131.02, COARSE BUBBLE AERATION EQUIPMENT-WWTP

1.2 GENERAL

A. See the GENERAL CONDITIONS and Division 1, GENERAL REQUIREMENTS, which contain information and requirements that apply to the work specified herein and are mandatory for this project.

B. All equipment shall be compliant with Federal Acquisition Register the clause 52.225-11, Buy American-Construction Materials under Trade Agreements (Nov 2023) and provision 52.225-12, Notice of Buy American Requirement-Construction Materials under Trade Agreements (May 2014).

1.3 DEFINITIONS

A. SCFM--Standard cubic feet per minute is understood to be air at 68 degrees F, 14.7 psia, and 36 percent relative humidity flowing at a rate of 1 cubic foot per minute.

B. SOTE--Standard Oxygen Transfer Efficiency is understood to be the percentage of the oxygen in the air supplied that is transferred into a solution of tap water under standard conditions of 20 degrees C, 0.0 mg/l residual dissolved oxygen concentration, and a barometric pressure of 760 mm Hg (dry air).

C. SOTR--Standard Oxygen Transfer Rate is understood to be the rate of oxygen transfer to tap water at standard conditions of 20 degrees C, 0.0 mg/l residual dissolved oxygen concentration, and a barometric pressure of 760 m Hg (dry air).

D. Sidewater depth (SWD) is understood to be the interior dimension from the structure base to the water surface. This will vary at different points in the basin due to sloping floor slabs and hydraulic water surface elevation differences.

E. Dynamic wet pressure is understood to be the pressure to operate at the specified conditions minus submergence and flow control losses.

1.4 MANUFACTURER'S SERVICES

A. Manufacturer’s services shall be provided in accordance with Section 019113, GENERAL COMMISSIONING REQUIREMENTS and the following:

1. A qualified Manufacturer's representative of the equipment specified shall be present at the jobsite for installation assistance, inspection and certification of the installation, equipment testing, startup assistance, and training of Owner's personnel for the minimum person-days listed, travel time excluded. Provide the following services for each WWTP in a minimum of two trips:
   a. 1½ person-days for installation assistance, inspection and certification of the installation, and functional and performance testing of all aeration diffusers.
   b. ½ person-day for pre-startup classroom or jobsite training.
   c. 1 person-day for start-up assistance.
2. A qualified Manufacturer’s representative shall be one who has had at least 2 years of experience in the installation of the equipment specified herein.
3. Startup services and training of Owner’s personnel shall be at such times as requested by the Owner.
4. Submit a certification of proper installation and satisfactory performance as specified in Part 3 of these Specifications.

1.5 QUALITY ASSURANCE

A. The equipment covered by these specifications shall be the product of a single Manufacturer regularly engaged in the production of equipment for the specified use. The Manufacturer shall have the sole responsibility for the proper functioning of the equipment as furnished.

B. The aeration equipment Manufacturer shall be experienced in the manufacture, installation, and operation of specified systems, as demonstrated by a minimum of (10) years in the aeration system business and a minimum of (30) aeration systems installed at wastewater treatment facilities of comparable size to the ones specified in these specifications.

1.6 SUBMITTALS DURING CONSTRUCTION

A. Submittals shall be made in conformance with Section 013300, SUBMITTAL PROCEDURES. In addition, the following shall be submitted:
   1. Complete specifications, drawings, and descriptive literature on the equipment and any exceptions to these Specifications. At a minimum, the following information shall be included:
      a. Complete description of the aeration equipment which shall include but not be limited to dropleg connections to the air manifolds, air manifolds, air distribution headers, air balancing orifices, diffusers, supports, anchorage details, expansion joints, air manifold and header joints, gaskets, bolts, nuts and washers, and all materials used.
      b. A drawing of the proposed aeration equipment layout for each aeration zone, showing all air pipe sizes and lengths, distances between air distribution headers, and the location of all diffusers, supports, and expansion joints.
      c. A signed letter from the Manufacturer or equipment supplier that the equipment proposed to be furnished is in full compliance with the Specifications and all addenda issued, except as noted in the letter. Submittals may be returned unreviewed if an exception to the Specification is found that is not noted in the letter.

d. Dimensional and weight information on separate components and assemblies.
e. Structural calculations to demonstrate the capability for the air header support system to properly support the diffused aeration system under all operation conditions specified herein. The calculations shall be prepared by a registered engineer.
f. Pressure loss calculations for system from point of connection to basin supply air header to diffuser discharge, including pressure loss due to diffuser submergence. Calculations shall show distribution and balancing of air within each aeration zone for the minimum and maximum air flow rates specified in the Detailed Aeration System Specifications.
g. Detailed information for the transitions from the Contractor's scope to the Manufacturer's scope.
h. Detail drawings for connections of diffusers to air headers.
i. Detail drawings for piping supports on basin floor.

2. A list of ten installations each in service for a period of not less than five years, where the same or essentially similar equipment by the Manufacturer is currently in service. Include contact name, telephone number, mailing address, and the names of the engineer, owner, and installation contractor..
3. Factory and field testing results and certifications as required by these Specifications.
4. List of Manufacturer supplied spare parts.
5. Submit qualifications of the Manufacturer's representative.

1.7 OPERATION AND MAINTENANCE MANUALS

A. Operation and Maintenance Manuals for the equipment specified herein shall be furnished as specified in Section 017823, OPERATION AND MAINTENANCE DATA.

B. The O&M manuals shall contain at a minimum spare parts lists and detailed instructions for all operation and maintenance tasks to be performed by the operator.

C. A spare manual shall be shipped with the equipment in order to allow for proper installation and operation of the equipment prior to the release of all final installation, operation, and maintenance manuals.

1.8 WARRANTY

A. The Manufacturer shall warrant that its equipment shall be free from defects in material and workmanship; and that it will replace or repair, any part or parts for which examination shall show to have failed under normal use and service by the Owner within one (1) year following the date of Substantial Completion.

1. The Manufacturer shall be responsible for freight and labor associated with shipping defective equipment to the factory or certified repair facility.

PART 2 - PRODUCTS

2.1 GENERAL

A. The use of a Manufacturer's name and model or catalog number is for the purpose of establishing the standard of quality and general configuration desired only. Products of other Manufacturers will be considered in accordance with the General Conditions.

B. Nameplates with the name of the Manufacturer, equipment model number and all other pertinent data shall be affixed at a visible and accessible location on all equipment.

2.2 MANUFACTURERS

A. Sanitaire

B. Aquarius Technologies

C. Environmental Dynamics International (EDI)

D. SSI Aeration

E. Approved Equal.

2.3 SERVICE CONDITIONS AND PERFORMANCE REQUIREMENTS

A. Service conditions and performance requirements shall be as specified in the Detail Equipment Specifications.

a. GENERAL EQUIPMENT INFORMATION

B. The aeration systems for each basin shall be designed to allow for expansion and contraction over a temperature range of 20 degrees F to 95 degrees F ambient air when the basins are dewatered and 8 degrees C to 30 degrees C water temperature when the basins are filled.

C. The support system design shall allow for vertical adjustment in the field to provide a level installation of the diffuser grids.

2.4 STAINLESS STEEL COMPONENTS

A. Unless otherwise specified herein, all material designated as stainless steel herein or on the Drawings shall conform to the requirements of Section 400510.09, DPS: STAINLESS STEEL-WWTP and as specified herein.

B. Finish clean all interior and exterior welds and piping by full immersion pickling and rinse with water to remove all carbon deposits and contaminants to regenerate a uniform corrosion resistant chromium oxide film per ASTM A380 Section 6.2.11, Table A2.1 Annex A2 and Section 8.3.

C. No field welding shall be permitted.

D. All minimum pipe sizes shall be as shown on the Drawings. All fittings shall be short radius unless noted otherwise.

2.5 PVC PIPE AND FITTINGS

A. All PVC pipe and fittings shall conform to the requirements in Sections 400510.12, DPS: POLYVINYL CHLORIDE (PVC) PIPE AND FITTINGS-WWTP, Schedule 40 PVC piping.

1. Factory solvent weld all PVC joints and fittings. Field solvent welding will NOT be permitted.

2.6 ANCHORS

A. Nuts, bolts, washers, and other nonwelded parts directly exposed to the wastewater shall be type 316 stainless steel. Threaded assemblies shall be treated with anti-seize lubricant prior to assembling to prevent galling.

B. Design anchor bolts for embedment in 4000 psi concrete with a pullout safety factor of 4.

C. Provide a mechanical stainless steel epoxy type anchor bolt system.

PART 3 - EXECUTION

3.1 GENERAL

A. The configuration of the diffuser piping system and the minimum number of diffusers are shown on the Drawings and described herein. Other configurations may be considered as long as certain requirements are met, as specified in this section and the Detail Equipment Specifications.

B. The aeration system supplier shall guarantee, in writing, that the equipment supplied will meet the performance standards specified herein. In the event that the equipment fails to meet the standards specified, the supplier shall make whatever modifications are required to meet the standards specified at no additional cost to the Owner.

3.2 PERFORMANCE TESTING

A. The Owner also reserves the right to conduct field performance tests, at the Owner's expense, to verify the field performance. If the field performance is not consistent with the specifications, the Contractor shall be responsible to modify or replace the aeration equipment, or retest the installed system at his own expense to demonstrate that the performance requirements are met. The second field test, if required, and any subsequent tests as may be necessary to ensure compliance, shall be performed at the Contractor's sole expense. The Engineer will document the work hours and other expenses incurred by the Engineer as a result of the second and subsequent tests and the Contractor shall reimburse the Owner for the charges of the Engineer.

B. All costs arising from project delays caused by the failure to meet the performance requirements specified herein shall be borne by the Contractor.

3.3 PREPARATION FOR SHIPMENT, STORAGE, AND PROTECTION

A. Equipment and materials shall be prepared and protected for shipment and storage in accordance with the requirements of Division 1, GENERAL REQUIREMENTS.

B. Insofar as is practical, the equipment specified herein shall be factory assembled. The interior inlet filter, inlet silencer, blower, motor, drive, drive guard, discharge silencer, valves, interconnecting piping, supports and all other accessories shall be shipped assembled on the base to the extent allowable by trucking. The parts and assemblies that are of necessity shipped unassembled shall be packaged and tagged in a manner that will protect the equipment from damage and facilitate the final assembly in the field.

C. For storage in excess of four (4) months, see the Manufacturer's operation and maintenance manual. Do not store in damp, humid, or corrosive environment.

3.4 INSTALLATION

A. The complete aeration system shall be installed in accordance with the Manufacturer's recommendations, the Drawings and Specifications, and as reviewed by the Engineer. The air header piping shall be furnished and installed in conformance with applicable portions of Division 40, PROCESS INTERCONNECTIONS-WWTP.

B. The diffusers shall be installed level to provide even air distribution throughout the diffuser grids. Submergence of diffuser grids shall not vary by more than 1 percent between the aeration zones of the same system based on the SWD specified herein.

C. A factory representative shall inspect the installation of the aeration system prior to filling the basin and shall make the necessary adjustments to the equipment for satisfactory operation.

3.5 FIELD TESTING

A. General:
   1. The Contractor may not begin the aeration system operation until the installation has been certified and has passed the field testing requirements specified herein and required by the Manufacturer.
   2. Functional testing shall be performed in clean water. The Owner shall provide clean water necessary to conduct the tests at no cost to the Contractor.

B. Manufacturer's representative and Engineer shall be present during all field testing.

C. Airflow/Pressure Test:
   1. A field airflow/pressure test, if requested by the Engineer or Commissioning Agent, shall be conducted by the Contractor on a representative sample of the diffused aeration equipment installed to verify the capability of the system to meet the maximum allowable pressure drop at the maximum airflow rates specified herein. The procedures used to conduct this test shall be approved by the Engineer or Commissioning Agent. A report documenting the procedures used and results obtained shall be submitted to the Engineer or Commissioning Agent upon completion of the test.

D. Uniformity Test:
   1. A field uniformity test shall be conducted in each for each aeration zone to ensure uniformity of airflow between diffusers after installation. The Contractor shall fill the basins with clean water to a level of between 2 inches to 6 inches above the diffusers. Air shall then be diffused through the diffusers at a rate of 1.0 scfm per diffuser. The uniformity of air between diffuser elements and the uniformity of airflow between diffuser elements shall be monitored visually. Diffusers failing the diffuser uniformity test shall be replaced. Unacceptable uniformity between diffusers shall be corrected by the Contractor.

3.6 MANUFACTURER'S CERTIFICATE(S)

A. Provide Manufacturer's certificate(s) in accordance with Section 019113, GENERAL COMMISSIONING REQUIREMENTS of Division 1, GENERAL REQUIREMENTS and as follows:
   1. The Manufacturer shall furnish to the Contractor, a written report certifying that the equipment; (1) has been properly installed; (2) is in accurate alignment; (3) is free from any undue stress imposed by connecting piping or anchor bolts; and (4) is in compliance with any conditions listed herein.
   2. The report shall include all results of the functional testing.

END OF SECTION

SECTION 465131.01 – DES: FINE BUBBLE AERATION – WWTP

PART 1 - GENERAL

1.1 WORK INCLUDED

A. This section covers the work necessary to furnish and install, complete, the fine bubble diffusers and all necessary appurtenances for complete and working systems in the aerobic digesters at the Hospital WWTP and the Hon-Dah WWTP. Related Sections:
   1. See Section 465131, AERATION EQUIPMENT – GENERAL-WWTP, for additional requirements.

PART 2 - PRODUCTS

2.1 SERVICE CONDITIONS

A. Each WWTP has four (4) Aerobic Digester basins.

B. Aerobic Digester Basin Dimensions:
   1. Hospital WWTP
      a. Basin floor dimensions: 28’-10” ft x 15’-2” ft
      b. Nominal basin sidewater depth (SWD) range: 2-14 ft
   2. Hon-Dah WWTP
      a. Basin floor dimensions: 22’-8” ft x 11’-6” ft
      b. Nominal basin sidewater depth (SWD) range: 2-14 ft

C. Anticipated operating conditions for design of the fine bubble diffused aeration equipment at both WWTPs are as follows:
   1. Temperature of Mixed Liquor:
      a. Minimum = 5°C.
      b. Average = 15°C
      c. Maximum = 22°C
   2. Sludge Suspended Solids Concentration:
      a. Minimum = 2,500 mg/L.
      b. Average = 7,500 mg/L.
      c. Maximum = 20,000 mg/L.
   3. pH of Mixed Liquor: 6 to 8.

2.2 PERFORMANCE REQUIREMENTS

A. The fine bubble aeration equipment shall be installed in each of the basins with one dropleg each.

B. Nominal air flow to each basin:
   1. Hospital WWTP
      a. Minimum: 20 scfm (4 feet of water)
      b. Maximum: 207 scfm (14 feet of water)
   2. Hon-Dah WWTP
      a. Minimum: 20 scfm (4 feet of water)
      b. Maximum: 165 scfm (14 feet of water)
   3. Note that the aerobic digester is mixing controlled and air must be provided as specified herein.

4. Air flow rates per diffuser:
   a. Air flow rates per diffuser for all design conditions shall not exceed 3.0 scfm.
5. The minimum number of diffusers for each basin shall be determined by the manufacturer.

C. Fine bubble diffusers shall be designed for operation in aerobically digesting sludge. The diffusers shall be completely submerged units supplied with compressed air. The units shall accomplish oxygen transfer and mixing and shall provide dispersion of oxygen throughout the basin.

D. The influent to the digester will be a combination of scum and waste activated sludge (WAS). The aeration equipment shall mix and entrain oxygen in the basin contents by diffusing air into the liquid.

E. The maximum allowable pressure drop through each diffuser and orifice control in a clean condition at design operating depth shall not exceed the following values at the airflow rates designated below:

Diffuser Airflow Rate (scfm)	Pressure Drop (Inches of H2O)
1.0	15
2.0	23
3.0	28

F. The aeration system shall be designed and air lateral orifices sized so that at minimum and maximum airflows, the airflow rate output of any two diffusers in the systems shall not differ by more than 10 percent (based on the diffuser with the lower flow rate). The Manufacturer shall furnish calculations (including all assumptions) to verify this requirement. The distribution and balancing of air shall be controlled by the use of orifices and proper header size selection only. The use of flow distribution control devices requiring automatic and/or manual operation will not be acceptable.

G. The fine bubble aeration equipment shall be capable of maintaining its structural integrity and location within the aeration basin under a variety of process conditions, including basin filling, dewatering, cleaning, and a dewatered condition.

2.3 GENERAL EQUIPMENT INFORMATION

A. See Section 465131, AERATION EQUIPMENT – GENERAL-WWTP.

B. The aeration equipment shall be a fixed in-place, fine bubble, diffused air system.

2.4 AERATION DROPLEGS

A. Dropleg piping shall be type 316 stainless steel and transition to PVC as shown on the Drawings.
   1. The Manufacturer shall be responsible for the stainless steel droplegs, the transition from welded steel to stainless steel, the transition from stainless steel to PVC, and all PVC piping thereafter.
   2. Provide a type 316 stainless steel Van Stone style flange with a 150-pound bolt pattern for the top connection.

a. For corrosion protection, the connection shall be insulated to prevent the welded steel from contacting the stainless steel.
b. Alternate methods of connecting the stainless steel droplegs to the welded steel supply piping must be approved by the Engineer.

3. A stainless steel band clamp coupling with nitrile rubber gasket shall be furnished for connection between the stainless steel upper droplegs and the PVC lower dropleg section. Coupling shall be Smith-Blair Full Circle repair clamp, Type 256, or equal.

2.5 AIR MANIFOLDS

A. Provide all air manifolds constructed of Schedule 40 PVC pipe as shown on the Drawings.
1. The main air manifolds shall be located at the same centerline elevation as the diffuser laterals.
2. Provide supports per Manufacturer's recommendation.

2.6 DIFFUSER LATERALS

A. The diffuser laterals shall connect to the main air manifolds as indicated above and shown on the Drawings.
1. Diffuser laterals shall be constructed of Schedule 40 PVC, IPS SDR 21, or shall match SDR 21 pipe wall thickness.
2. Laterals shall be fabricated with single diffuser holders mounted to the crown of the lateral for complete air seal and strength. If solvent welded, solvent weld area shall be a minimum of 15 square inches.
3. Laterals shall be designed to resist a dead load of min. 200 lbs applied vertically to the outer edge of the diffuser holder.
4. Provide threaded removable end caps complete with gasket, threaded coupling, and end plate for cleanout at the end of each lateral.
5. Diffuser laterals shall be designed for full floor diffuser coverage.

2.7 AIR MANIFOLD AND DIFFUSER LATERAL JOINTS

A. Join manifold and lateral sections with positive locking fixed threaded union or flange type joints for all submerged joints to prevent blow apart and rotation.
1. Bell and spigot or slip on joints are not acceptable for submerged joints.
2. Joints shall be capable of resisting thrust generated by expansion/contraction of the diffuser laterals over a temperature range of 180°F.
3. Fixed joints shall be capable of resisting 80 ft-lb torque without joint movement or failure.
4. Fixed joints for PVC piping shall consist of a flanged spigot section solvent welded to one end of a diffuser lateral, a threaded socket section welded to the mating lateral, an O-ring gasket, and a threaded screw on retainer ring.
5. Fixed joints shall have interlocking splines and grooves to prevent rotation of the air distributors. All rotational forces shall be transferred through the interlocking splines. Joints that require the o-ring to transfer rotational forces between the splines are not acceptable.
6. If positive locking fixed joints are not used, lateral connections shall be one of the following:
a. 125 lb flanges. Flanged joints shall have a 125 lb drilled angle face ring, follower flange, and type 316 stainless steel hardware.

b. Alternate joint design capable of resisting thrust and torsion as specified above. If an alternate joint design is furnished, details must be submitted to the Engineer for approval.

2.8 GASKETS

A. Joints, flanges, and couplings shall be provided with gaskets forming an airtight connection at 20 psig. Gaskets shall be neoprene, 45 to 55 durometer.

2.9 SUPPORTS

A. All welded pipe supports and assemblies shall be shop fabricated from type 316 stainless steel with a 2D finish conforming to AISI 316. Unless specified otherwise, all non-welded pipe supports and pieces shall be shop fabricated from sheets and plates of type 316 stainless steel conforming to AISI 304 and ASTM A 240-78a.

B. Provide each section of manifold and diffuser lateral with supports as follows:
   1. Limit maximum support spacing to 8 feet.
   2. Design all supports to allow for thermal expansion and contraction forces over a temperature range of 125° F and to minimize stress build up in the piping system.
   3. Design supports to be adjustable without removing the lateral from the support.
   4. Design supports to allow for complete removal from the tank, less the anchor bolt, to facilitate installation of additional headers and in-tank maintenance. Support structures that consist of rods epoxied directly into the tank floor are not acceptable.
   5. Manifold Support – 6 inch diameter and larger:
      a. Design supports to include hold down guide straps, support structure and anchor bolts.
      b. Design guide straps with a 2 inch minimum width to eliminate point load on manifold and minimize binding.
      c. Design support for 2 inches plus or minus vertical adjustment for leveling of manifold.
      d. Attach supports to tank floor with two stainless steel anchor bolts.
   6. Lateral and Manifold Supports – 4 inch diameter and smaller:
      a. Provide guide and fixed type supports to allow expansion/contraction.
      b. Design supports with hold down straps, support structure and anchor bolt.
      c. Design support for 1 1/2 inch (plus or minus) vertical adjustment for leveling air distributor to plus or minus 1/4 inch.
      d. Guide support:
         1. Guide straps to have 1 1/2 inch wide top and bottom contoured bearing surface with chamfered edges to minimize binding and resistance to movement of air distributor under full buoyant uplift load.
         2. Design strap with 1/8 inch clearance around distributor so strap is self-limiting and cannot be over tightened.

e. Fixed supports:
   1. Fixed straps to have 1 1/2 inch wide top and bottom contoured bearing surface with punched burrs to positively grip the air distributor when tightened.
   2. Design strap to be self-limiting to prevent stressing the distributor if the clamp is overtightened.
f. Attach supports to tank floor with one stainless steel anchor bolt.

2.10 FINE BUBBLE DIFFUSER ASSEMBLY DESCRIPTION

A. Diffuser assemblies consisting of flexible membrane diffuser element, diffuser element holder, sealing gasket or O-ring, air flow control orifice, and retaining device shall be furnished.

B. Membrane Diffuser:
   1. Provide circular membrane diffuser discs with integral O-ring of EPDM synthetic rubber compound with precision die formed slits. Thermoplastic materials (ie plasticized PVC or polyurethane) are not acceptable.
      a. Add carbon black to the material for resistance to ultraviolet light.
      b. Diffuser membrane shall be one piece injection molded part with a minimum thickness of 0.080 inches for 9 inch diameter unit.
      c. The maximum tensile strength of the diffuser membrane shall be 10 psi when operating at 2.4 SCFM/ft² of material.
      d. Diffuser membranes shall be free of tears, voids, bubbles, creases or other structural defects.
      e. Furnish membrane material to meet the following:

Item	Value/Units	ASTM
Base Polymer	EPDM	D573
UV Resistance	Carbon Black	
Specific Gravity	1.25 or less	
Durometer – Minimum	58% ± 5%	D2240
Modulus of Elasticity	500 psi	D412
Ozone Resistance (72 hrs: 40°C pphm)	No cracks @ 2X magnification	D1171 Test A
Tensile Strength	1200 psi	D412
Elongation - % - Retained 70 hrs @ 100°C - minimum at break	75% Max 350%	D573 D412

   2. A check valve shall be integral to the membrane diffuser.
   3. Design and test diffusers for a dynamic wet pressure (DWP) of 12 inches ± 20% water column @ 1.0 SCFM/diffuser and 2 inches submergence.
   4. Visual Uniformity – Observe diffusers for uniform air distribution across the active surface of the diffuser at 1.0 SCFM/diffuser and 2 inches submergence. Active surface is defined as the perforated horizontal projected area of the diffuser.

5. Membranes shall seal when aeration system air is turned off.
6. Fine bubble diffuser assemblies shall be designed for solvent welding to the crown of the Air Distribution Headers and shall be solvent welded at the factory.
   a. Alternatively, furnish saddle clamps to connect diffusers to pipe. Fabricate distributors with diffuser element holders factory solvent welded to the crown of the header or by use of a mechanical saddle for complete air seal and mechanical strength. Mechanical saddle attachment shall include air inlet port and positive locking mechanism to locate and lock the assembly to the air distributor piping. Mechanical saddles to be clamped directly into header pipe at predrilled outlet locations by Contractor.

C. Diffuser Support Plate: PVC diffuser support plates shall be furnished with an air plenum chamber below the diffuser element.

D. Diffuser Holders and Retainer Rings: The holder shall provide peripheral support for the diffuser. The retainer ring shall seal the diffuser and O-ring in the holder to prevent air leakage around gasket. The retainer ring shall have threads with minimum cross section of 1/8 inch and allow for one complete turn to engage threads.

2.11 CONTINUOUS PURGE SYSTEM

A. Each aeration grid shall be furnished with a continuous liquid purge system to drain condensate from the submerged aeration piping by use of process air.

B. The continuous purge system shall consist of a 2.5-inch diameter, 24-inch long tube diffuser connected to the invert of the air manifold by type 316 stainless steel tubing and clamps. One tube diffuser shall be installed on the air manifold adjacent to each dropleg.

2.12 SPARE PARTS

A. For both the Hospital and Hon-Dah WWTPs, the following spare parts shall be furnished and shall be suitably marked and boxed for shipment and storage.
   1. Provide 10 diffuser element retainers
   2. Provide 10 membrane diffuser elements

B. Spare parts for Manufacturers with a different number of diffuser elements shall equal or exceed the numbers specified above.

PART 3 - EXECUTION

3.1 GENERAL

A. See Section 465131, AERATION EQUIPMENT – GENERAL-WWTP, for additional requirements.

3.2 FACTORY PERFORMANCE TESTING

A. Performance testing is not required for the fine bubble aeration system.

3.3 INSTALLATION

A. Contractor shall install Manufacturer’s equipment in accordance with Section 465131, AERATION EQUIPMENT – GENERAL-WWTP, Manufacturer’s recommendations, the Drawings and Specifications.

3.4 FIELD ACCEPTANCE TESTS

A. Field test results shall be submitted with the Certificate of Installation as specified in Section 465131, AERATION EQUIPMENT – GENERAL-WWTP.

END OF SECTION

SECTION 465131.02 – DES: COARSE BUBBLE AERATION – WWTP

PART 1 - GENERAL

1.1 WORK INCLUDED

A. This section covers the work necessary to furnish and install, complete, the coarse bubble diffusers and all necessary appurtenances for complete and working systems in the Equalization Basins (EQ Basins) at the Hospital WWTP and the Hon-Dah WWTP.

B. Related Sections:
   1. See Section 465131, AERATION EQUIPMENT – GENERAL-WWTP, for additional requirements.

PART 2 - PRODUCTS

2.1 SERVICE CONDITIONS

A. Service Fluid: The wastewater in the EQ basins will be screened (2 mm) municipal wastewater.

B. Temperature of service fluid: 8°C - 18°C

C. pH of service fluid: 6 to 8

D. Parameters for the Equalization Basin are as follows:
   1.

Basin Parameters	Hospital WWTP	Hon-Dah WWTP
Number	1	1
Length x Width x Height (ft)	29’-6” x 15’-2” x 17’-6”	30’-2”’ x 11’-6” x 18’-0”

   2. The operating water level conditions for both WWTPs are as follows:
      a. Minimum Water Level for Aeration: 5 feet
      b. Maximum Water Level: 15 feet
      c. Normal Operating Water Level: 2-11 feet

2.2 PERFORMANCE REQUIREMENTS

A. Coarse bubble aeration equipment shall be installed in each basin with one dropleg each.

B. Diffusers shall be oriented per Manufacturer’s recommendation, while maintaining the clearance between diffusers and the Equalization Basin submersible mixer, as shown on the Drawings.

C. Coarse bubble diffusers shall provide a range of air flow rates, which can be achieved with a throttling valve.

D. The coarse bubble aeration equipment shall be able to achieve 7.0 scfm per 1000 cubic feet of water, resulting in the following approximate total air flows

	Hospital WWTP	Hon-Dah WWTP
Maximum Air Flow (15’ WL)	50 scfm	40 scfm
Minimum Air Flow (5’ WL)	15 scfm	13 scfm

E. The diffusers shall be able to maintain the flowrates associated with the full range of air flow specified herein. The minimum number of diffusers for each basin shall be determined by manufacturer.

F. Each diffuser assembly shall provide uniform air release over the specified airflow range.

G. The aeration system shall be sized so that the airflow rate output of any two diffusers in the systems shall not differ by more than 10 percent. The Manufacturer shall furnish calculations (including all assumptions) to verify this requirement. The distribution and balancing of air shall be controlled by the use of orifices and proper header size selection only. The use of flow distribution control devices requiring automatic and/or manual operation will not be acceptable.

H. The coarse bubble aeration equipment shall be capable of maintaining its structural integrity and location within the aeration basin under a variety of process conditions, including basin filling, dewatering, and cleaning.

2.3 GENERAL EQUIPMENT INFORMATION

A. See Section 465131, AERATION EQUIPMENT – GENERAL-WWTP.

B. The aeration equipment shall be a fixed in-place, coarse bubble, diffused air system.

C. Stainless steel refers to Type 316L, unless indicated otherwise.
   1. Fabricate all welded parts and assemblies and non-welded parts from sheets and plates of 316L SS.
   2. Pickle all stainless steel assemblies and parts after welding, fabrication, and wire brushing by complete immersion in acid.
   3. Perform all welding in the factory using MIG, TIG, or plasma-arc welding inert gas processes. Field welding is not permitted.

D. The Manufacturer shall be responsible for the droplegs, connection to manifold, all manifold and lateral piping, diffuser assemblies, and pipe supports for a full and complete working system.

2.4 AERATION DROPLEGS

A. Dropleg piping shall be type 316L stainless steel.

B. The dropleg piping shall be provided with a flanged top connection and a plain end and shall extend to within to 2 feet of the air manifold. The dropleg pipe shall connect to the air manifold piping by means of a wrap-around clamp adapter.

2.5 AIR MANIFOLDS

A. All submerged manifolds and header components shall be 316L SS.

B. Diffuser connection on the piping shall be factory welded and include a minimum 2-3/8” diameter weld on the lateral piping.

2.6 EXPANSION JOINTS

A. Design shall account for expansion/contraction over the typical operating temperature range, specified herein, without deforming any components. Provide expansion joints as required.

B. Joints, flanges, and couplings shall be provided with gaskets forming an airtight connection at 20 psig. Gaskets shall be neoprene, 45 to 55 durometer.

2.7 SUPPORTS

A. Provide 316L SS support stands, including hold-down, guide straps anchor bolts, and supporting structure. Each 19.5-foot length of pipe shall have a minimum of 3 support stands. Guide straps shall be a minimum of 1.5 inch wide, DN200 and above size pipe supports shall have 2 inch wide.

B. Supports shall have a mechanism for ±2 inch vertical adjustment for the alignment of the manifold in the field. Supports shall be designed to allow for complete removal from the tank (less anchor bolt) to enable cleaning and maintenance of tank bottom.

C. Minimum anchor bolt and threaded rod diameter shall be 3/8 inch. Anchor bolts shall be sized with a pull out strength design safety factor of 4 or greater. Support systems using a single anchor bolt design will not be accepted.

D. Fixed supports to consist of a self-limiting hold down and sliding mechanism. Clamping device shall positively grip the air distribution header when tight and be self limiting to prevent overstressing the header if the clamp is over tightened. Worm gear clamps are not to be utilized for attaching header pipe to supports, and U-bolts are not acceptable.

2.8 COARSE BUBBLE DIFFUSER ASSEMBLY

A. Diffuser units shall be 24-inch long stainless steel, wide-band, non-clog assembly with a ¾ inch threaded connection.

B. Diffuser units shall be supplied with removable deflector plate

2.9 SPARE PARTS

A. The following spare parts shall be furnished for each Equalization Basin, and shall be suitably marked and boxed for shipment and storage.
   1. Two (2) diffuser assemblies
   2. Two (2) pipe supports
   3. Two (2) expansion joints

PART 3 - EXECUTION

3.1 GENERAL

A. See Section 465131, AERATION EQUIPMENT – GENERAL-WWTP, for additional requirements.

3.2 FACTORY PERFORMANCE TESTING

A. Factory performance testing is not required for the coarse bubble aeration system.

3.3 INSTALLATION

A. Contractor shall install Manufacturer's equipment in accordance with Section 465131, AERATION EQUIPMENT – GENERAL-WWTP, Manufacturer's recommendations, the Drawings and Specifications.

3.4 FIELD ACCEPTANCE TESTS

A. Field test results shall be submitted with the Certificate of Installation as specified in Section 465131, AERATION EQUIPMENT – GENERAL-WWTP.

END OF SECTION